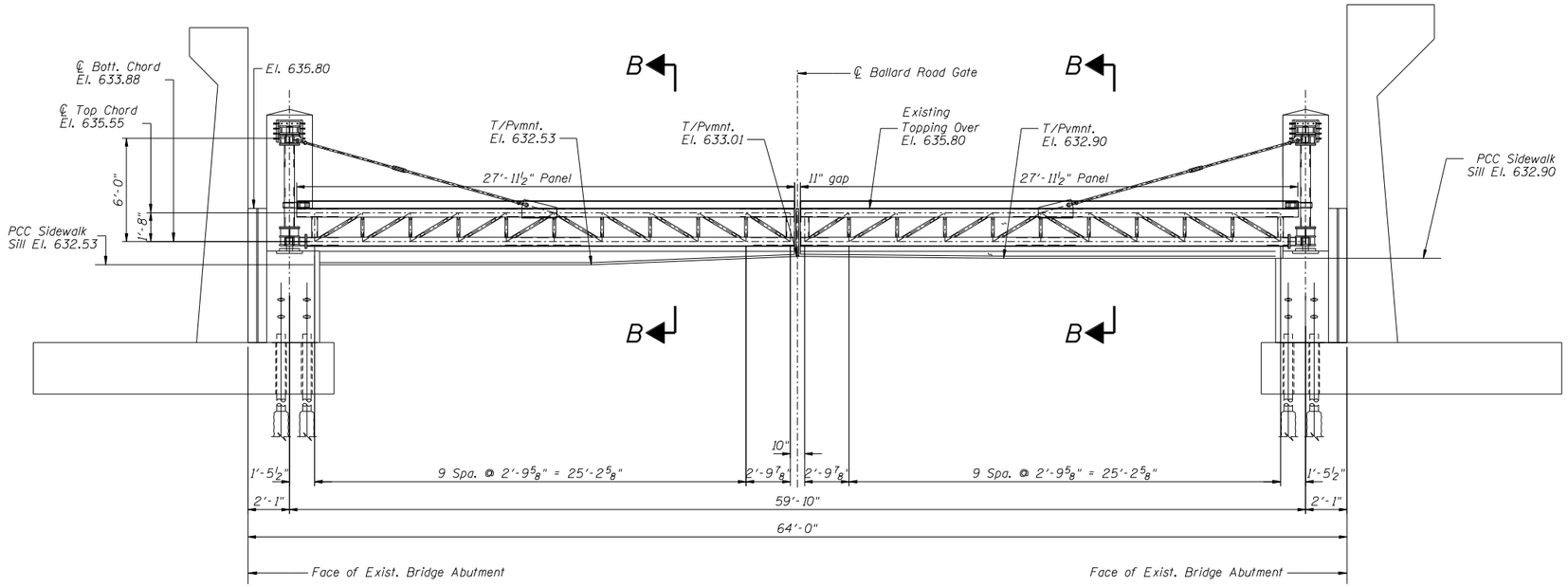

ELEVATION - LOOKING SOUTH EAST

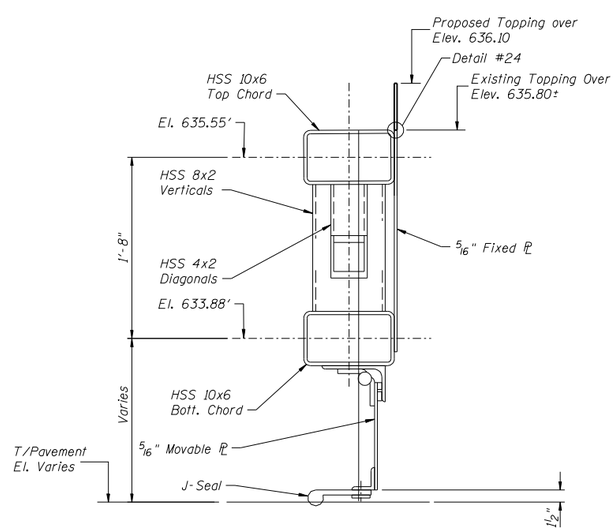

SECTION B-B

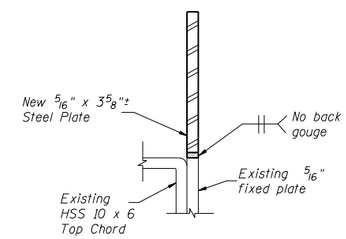

DETAIL #24

PAINTING NOTES:

The paint shall match existing gate paint system and color. See Special Provisions. Cost included with Furnishing and Erecting Structural Steel.

BILL OF MATERIAL

Furnishing and Erecting Structural Steel	Pound	220

SCALE: NONE

DESIGNED BY: TMM CHECKED BY: GMS
DRAWN BY: JJF CHECKED BY: GMS

9/1/2011 2:15:39 PM O:\OwrProjImpl\Projects\Rand Park Pump Station Paving Block Repair\DGN Plan Sheets\Ballard Road Flood Gate Closure Structure