09-22-2023 LETTING ITEM 032

FOR INDEX OF SHEETS, SEE SHEET NO.2

F.A.I. RTE.	SECTION	COUNTY	TOTAL SHEETS	SHEET NO.
474	(72-3HB-4)BR	PEORIA	175	1
	ILLINOIS	CONTRACT NO. 68886		

STATE OF ILLINOIS
DEPARTMENT OF TRANSPORTATION

PROPOSED HIGHWAY PLANS

FAU ROUTE 6578 (AIRPORT) OVER FAI 474 (I–474)
SECTION (72–3HB–4)BR
PROJECT NHPP–Z14H(414)
BRIDGE REPLACEMENT
PEORIA COUNTY

HIGHWAY STANDARDS

000001-08	606001-08	701101-05	701602-10	814001-03
280001-07	606301-04	701106-02	701701-10	821101-02
420401-13	606306-04	701400-11	701901-08	836001-04
420701-03	610001-09	701401-13	704001-08	838001-01
442001-04	630301-09	701402-12	720011-01	873001-02
482001-02	631031-18	701406-13	720021-03	729001-01
515001-04	635001-02	701411-09	725001-01	781001-04
542301-03	665001-02	701431-13	780001-05	
542401-04	701001-02	701428-01	782006-01	
601001-05	701006-05	701451-05		
601101-02				

I-474

FUNCTIONAL CLASSIFICATION:
INTERSTATE
2017 ADT=29,200
2037 ADT=
MU=2900, SU=1075

AIRPORT RD (FAU 6578)

FUNCTIONAL CLASSIFICATION:
MINOR ARTERIAL
2017 ADT=11,100
2037 ADT=13,500
MU=140, SU=370

PROJECT IS LOCATED IN
LIMSTONE TOWNSHIP IN
UNINCORPORATED PEORIA COUNTY

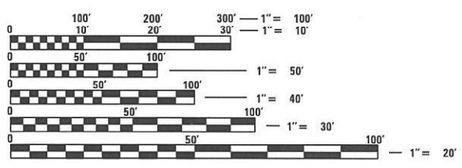

FULL SIZE PLANS HAVE BEEN PREPARED USING STANDARD ENGINEERING SCALES. REDUCED SIZED PLANS WILL NOT CONFORM TO STANDARD SCALES. IN MAKING MEASUREMENTS ON REDUCED PLANS, THE ABOVE SCALES MAY BE USED.

J.U.L.I.E.
JOINT UTILITY LOCATION INFORMATION FOR EXCAVATION
1–800–892–0123
OR 811

PROJECT ENGINEER: NICOLE FAYANT (309)–671–3454
PROJECT MANAGER: RON NOLTE (309)–671–3470

CONTRACT NO. 68886

C–94–073–09

BRIDGE REPLACEMENT
STA. 144+48.04
EXIST SN 072-0126
PROP SN 072-0254

T-10-N

PROJECT BEGINS
STA. 184+37.00
AIRPORT RD.

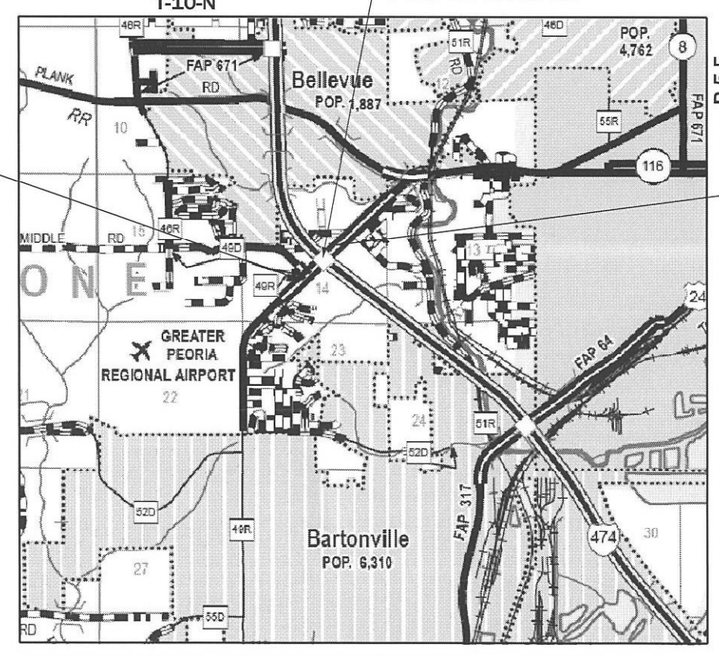

PROJECT ENDS
STA. 202+98.00
AIRPORT RD.

GROSS LENGTH = 1861 FT. = 0.353 MILE
NET LENGTH = 1861 FT. = 0.353 MILE

N

LOCATION MAP
NOT TO SCALE

STANLEY J. FEARDAY
062-057499
LICENSED PROFESSIONAL ENGINEER
ILLINOIS

6–21–2023

STANLEY J. FEARDAY
LICENSE EXPIRES 11–30–2023
THE UPCHURCH GROUP, INC.
MATTOON, ILLINOIS 61938

D–94–052–09

LOCATION OF SECTION INDICATED THUS: –

PROJECT DESCRIPTION:
THIS PROJECT CONSISTS OF BRIDGE REPLACEMENT, PAVEMENT BUILDUP, DRAINAGE IMPROVEMENTS, AND ANY OTHER COLLATERAL WORK NECESSARY TO COMPLETE THE PROJECT.

STATE OF ILLINOIS
DEPARTMENT OF TRANSPORTATION

SUBMITTED June 22 20 23
Kensil A Garnett KSD
REGIONAL ENGINEER

August 18, 2023
ENGINEER OF DESIGN AND ENVIRONMENT

August 18, 2023
DIRECTOR OF HIGHWAYS PROJECT IMPLEMENTATION

PRINTED BY THE AUTHORITY OF THE STATE OF ILLINOIS

REV. 8/23/23

GENERAL NOTES

SOILS REPORT AVAILABILITY
THE SOILS REPORT AND ALL SOILS DATA COLLECTED AND PROCESSED IN CONJUNCTION WITH THE DESIGN OF IMPROVEMENT IS ON FILE AT THE DISTRICT OFFICE WHERE IT IS AVAILABLE FOR INSPECTION BY CONTRACTORS OR PROSPECTIVE BIDDERS. BY SUBMITTING A BID, THE CONTRACTOR ACKNOWLEDGES THAT THE SOILS REPORT AND DATA HAVE BEEN MADE AVAILABLE, THAT THE CONTRACTOR IS AWARE OF THE REPORT CONTENTS AND APPENDICES, AND THAT THE SOILS REPORT IS PART OF THE CONTRACT DOCUMENTS.

AVAILABILITY OF ELECTRONIC FILES
MICROSTATION AND GEOPAK FILES OF THIS PROJECT WILL BE MADE AVAILABLE TO THE CONTRACTOR AFTER CONTRACT AWARD. IF THERE IS A CONFLICT BETWEEN THE ELECTRONIC FILES AND THE PRINTED CONTRACT PLANS AND DOCUMENTS, THE PRINTED CONTRACT PLANS AND DOCUMENTS SHALL TAKE PRECEDENCE OVER THE ELECTRONIC FILES. THE CONTRACTOR SHALL ACCEPT ALL RISK ASSOCIATED WITH USING THE ELECTRONIC FILES AND SHALL HOLD THE DEPARTMENT HARMLESS FOR ANY ERRORS OR OMISSIONS IN THE ELECTRONIC FILES AND THE DATA CONTAINED THEREIN. ERRORS OR DELAYS RESULTING FROM THE USE OF THE ELECTRONIC FILES BY THE CONTRACTOR SHALL NOT RESULT IN AN EXTENSION OF TIME FOR ANY INTERIM OR FINAL COMPLETION DATE OR SHALL NOT BE CONSIDERED CAUSE FOR ADDITIONAL COMPENSATION. THE CONTRACTOR SHALL NOT USE, SHARE, OR DISTRIBUTE THESE ELECTRONIC FILES EXCEPT FOR THE PURPOSE OF CONSTRUCTING THIS CONTRACT. ANY CLAIMS BY THIRD PARTIES DUE TO USE OR ERRORS SHALL BE THE RESPONSIBILITY OF THE CONTRACTOR. THE CONTRACTOR SHALL INCLUDE THIS DISCLAIMER WITH THE TRANSFER OF THESE ELECTRONIC FILES TO ANY OTHER PARTIES AND SHALL INCLUDE APPROPRIATE LANGUAGE BINDING THEM TO SIMILAR RESPONSIBILITIES.

PLAN ELEVATIONS - U.S.G.S. MEAN SEA LEVEL DATUM
ALL ELEVATIONS SHOWN ON THE PLANS ARE ESTABLISHED FROM U.S.G.S. MEAN SEA LEVEL DATUM. SPECIFICALLY NAVD88 (GEOID09)

TREE REMOVAL RESTRICTIONS
DUE TO THE POTENTIAL PRESENCE OF ENDANGERED BATS, NO TREE REMOVAL WILL BE ALLOWED ON THIS PROJECT BETWEEN APRIL 1ST AND SEPTEMBER 30TH.

ENVIRONMENTAL REVIEWS
PRIOR TO THE USE OF ANY PROPOSED BORROW AREAS, USE AREAS (TEMPORARY ACCESS ROADS, DETOURS, RUN-AROUNDS, ETC.) AND/OR WASTE AREAS, THE CONTRACTOR SHALL FILE THE REQUIRED ENVIRONMENTAL RESOURCE REQUEST SURVEYS ACCORDING TO SECTION 107.22 OF THE STANDARD SPECIFICATIONS. THESE SURVEYS ARE REQUIRED IN ORDER FOR THE DEPARTMENT TO CONDUCT CULTURAL AND BIOLOGICAL RESOURCE SURVEYS FOR THE PROPOSED SITE.

THE REQUIRED ENVIRONMENTAL RESOURCE DOCUMENTATION SHALL INCLUDE THE FOLLOWING:
- BDE FORM 2289 (BORROW SITE REVIEW)
- BDE FORM 2290 (WASTE/USE AREA REVIEW)
- A LOCATION MAP SHOWING THE SIZE LIMITS AND LOCATION OF THE USE AREA
- COLOR PHOTOGRAPHS DEPICTING THE USE AREA
- BORROW AREA ENTRY AGREEMENT FORM - D4 PI0101

PRIOR TO ANY WASTE MATERIALS BEING REMOVED FROM THE CONSTRUCTION SITE THE REQUIRED ENVIRONMENTAL RESOURCE SURVEYS SHALL BE OBTAINED AND FILED BY THE CONTRACTOR. EXCESS WASTE PRODUCTS REMOVED FROM THE CONSTRUCTION SITE SHALL BE DISPOSED OF AS REQUIRED IN SECTION 202.03 OF THE STANDARD SPECIFICATIONS.

ANY PROTRUDING METAL BARS SHALL BE REMOVED PRIOR TO THE DISPOSAL OF BROKEN CONCRETE AT APPROVED DISPOSAL SITES.

PLEASE NOTE THAT A MINIMUM OF FOUR WEEKS SHALL BE ALLOWED FOR THE DISTRICT TO OBTAIN THE REQUIRED WASTE SITE ENVIRONMENTAL CLEARANCES AND SIX WEEKS FOR THE REQUIRED BORROW SITE ENVIRONMENTAL CLEARANCES.

SEEDING - SIDESLOPE RIPPING
ALL SLOPES STEEPER THAN 3 TO 1 AND OVER 15 FT (4.5 M) IN HEIGHT SHALL BE RIPPED. THIS SHALL CONSIST OF RIPPING BETWEEN 18 INCHES (450 MM TO 600 MM) DEEP NORMAL TO THE SLOPE. THE INTERVAL OF RIPPING ALONG THE SLOPE SHALL BE 12 FT (3.6 M). THIS WORK SHALL BE DONE AFTER THE SEED BED HAS BEEN PREPARED BUT BEFORE ANY FERTILIZER OR SEED HAS BEEN APPLIED. THE FERTILIZER AND SEED SHALL BE APPLIED WITHIN A 24-HOUR PERIOD AFTER THE RIPPING HAS BEEN DONE. THIS WORK WILL NOT BE PAID FOR SEPARATELY BUT WILL BE INCLUDED IN THE COST OF THE VARIOUS ITEMS OF SEEDING INVOLVED.

POLYMERIZED BITUMINOUS MATERIALS (TACK COAT) RATES

Surface Type	Residual Rate
Milled (HMA or PCC)	0.08 lb / sq ft
Existing Pavement	0.08 lb / sq ft
Fog Coat (between lifts)	0.08 lb / sq ft

BUTT JOINT CUTTING TIME RESTRICTION
BUTT JOINTS SHALL NOT BE MILLED MORE THAN THREE (3) DAYS PRIOR TO PLACEMENT OF THE HMA SURFACE COURSE.

PAVING SURFACE COURSE
CONTINUOUS PAVING OPERATIONS ON THE MAIN ROADWAY SHALL BE MAINTAINED AT ALL TIMES DURING THE CONSTRUCTION OF THE HOT-MIX ASPHALT SURFACE. NO INTERRUPTIONS FOR SIDE ROADS, ENTRANCES, TURN LANES, ETC. WILL BE ALLOWED.

ORDERING LENGTH CONFIRMATION - DRAINAGE ITEMS
THE CONTRACTOR SHALL CONSULT WITH THE ENGINEER IN REGARD TO THE EXACT LENGTH OF THE BOX/PIPE CULVERTS, STORM SEWERS, AND/OR PIPE DRAINS REQUIRED PRIOR TO ORDERING THESE ITEMS.

SIGN POST HOLES
VERTICAL HOLES SHALL BE CONSTRUCTED IN THE ISLAND PAVEMENT AND/OR CONCRETE MEDIAN OF THE TYPE SPECIFIED OR CONCRETE MEDIAN SURFACE 4 INCHES (100 MM). THE HOLES SHALL BE 24 INCHES (600 MM) IN DIAMETER OR 24 INCHES (600 MM) SQUARE AND THEY SHALL BE FREE OF ANY OBSTRUCTION, EXCEPT EARTH, FOR A DEPTH OF 5 FEET (1.5 M) AT THE LOCATIONS SHOWN ON THE PLANS OR AS DIRECTED BY THE ENGINEER. ANY HOLES NOT USED FOR THE PLACEMENT OF SIGNS SHALL BE FILLED AND COMPACTED FLUSH WITH THE TOP OF THE ISLAND PAVEMENT, CONCRETE MEDIAN OF THE TYPES SPECIFIED, OR CONCRETE MEDIAN SURFACE 4 INCHES (100 MM). THE TOP 3 INCHES (75 MM) OF SAID COMPACTED FILL SHALL CONSIST OF A HOT-MIX ASPHALT MIXTURE. ALL HOLES IN WHICH THE SIGN POSTS ARE INSTALLED AT THE TIME OF THIS CONTRACT SHALL BE SIMILARLY FILLED.

THIS WORK, INCLUDING ANY REQUIRED PAVEMENT REMOVAL NECESSARY TO CONSTRUCT THE SIGN POST HOLES, WILL NOT BE PAID FOR SEPARATELY BUT SHALL BE INCLUDED IN THE CONTRACT UNIT PRICE PER SQUARE FOOT (SQUARE METER) FOR ISLAND PAVEMENT AND/OR CONCRETE MEDIAN OF THE TYPE SPECIFIED, OR CONCRETE MEDIAN SURFACE, 4 INCHES (100 MM).

ADDITIONAL SUPPLEMENTAL TRAFFIC CONTROL
THE DEPARTMENT RESERVES THE RIGHT AT ANY TIME TO ADD ADDITIONAL TRAFFIC CONTROL SYSTEMS OR DEVICES WITHIN THE ACTIVE CONTRACT LIMITS, BY MEANS OF AN ADDITIONAL CONTRACT. ALL TERMS OF ARTICLE 105.08 OF THE STANDARD SPECIFICATIONS SHALL BE FOLLOWED BY EACH CONTRACTOR.

SIGNING
SIGN LOCATIONS MAY VARY FROM THE STATIONS SHOWN ON THE PLANS IN ACCORDANCE WITH DIRECTIONS FROM THE ENGINEER AT THE TIME OF CONSTRUCTION. SIGN LOCATIONS MAY BE ADJUSTED IN THE FIELD TO AVOID ANY FOUND UTILITIES.

ALL WOOD POST LOCATIONS SHALL BE VERIFIED WITH THE BUREAU OF OPERATIONS, TRAFFIC SECTION, BEFORE INSTALLATION.

INDEX OF SHEETS

FAA HEIGHT RESTRICTIONS
LOCATION: BELLEVUE, IL.
LATITUDE: 40-40-22.04 N NAD 83
LONGITUDE: 89-40-12.10 W
HEIGHTS: 635 FEET SITE ELEVATION (SE)
125 FEET ABOVE GROUND LEVEL (AGL)
760 FEET ABOVE MEAN LEVEL (AMS)

COMMITMENTS

NO COMMITMENTS.

PROJECT SPECIFIC GENERAL NOTES

THE LOCATION OF THE RIGHT OF WAY LINES SHOWN ON THESE PLANS WAS DETERMINED USING RIGHT OF WAY PLANS PROVIDED BY IDOT AND FROM THE LOCATIONS OF RIGHT OF WAY MARKERS FOUND IN THE FIELD. THE RIGHT OF WAY LINES WERE NOT DETERMINED BY ACTUAL BOUNDARY OR RIGHT OF WAY SURVEYS.

STATUS OF UTILITIES

AIRPORT ROAD AT I-474						
LOCATION(S)	OFFSETS FROM CENTERLINE OF AIRPORT ROAD (MIN. DEPTH)		COMPANY	TYPE OF UTILITY	TYPE OF CONFLICT	DISPOSITION
AIRPORT ROAD	AR STATION 183+50		ILLINOIS AMERICAN WATER	WATER	TEMPORARY SIGNALS	CAUTION
AIRPORT ROAD	EVERETT MCKINLEY DIRSON PARKWAY INTERSECTION		AMEREN GAS	GAS	TEMPORARY SIGNALS	CAUTION
AIRPORT ROAD	72' LT STA 184+00 TO 103' LT STA 186+60		i3 BROADBAND	FIBER	TEMPORARY SIGNALS	CAUTION
AIRPORT ROAD	75' LT STA 186+60 TO 70' LT STA 189+81		CMS FIBER OPTICS	FIBER	TEMPORARY SIGNALS & ROADWAY WORK	CAUTION
AIRPORT ROAD	AR STA 189+81		CMS FIBER OPTICS	FIBER	ROADWAY WORK	CAUTION
AIRPORT ROAD	62' RT STA 189+21 TO 80' RT STA 193+56		CMS FIBER OPTICS	FIBER	ROADWAY & BRIDGE ABUTMENT (SOUTH)	CAUTION, MAY NEED ADJUSTED AT PROPOSED SOUTH ABUTMENT
AIRPORT ROAD	95' RT STA 184+37 TO 30' RT STA 202+98		USS FIBER OPTIC	FIBER	ROADWAY & BRIDGE	CAUTION
AIRPORT ROAD	AR STA 184+87		IDOT LIGHTING	ELECTRIC	TEMPORARY SIGNALS	CAUTION
AIRPORT ROAD	AR STA 187+25		IDOT LIGHTING	ELECTRIC	TEMPORARY SIGNALS	CAUTION
AIRPORT ROAD	89' LT STA 186+65 TO 45' LT STA 193+40		IDOT LIGHTING	ELECTRIC	ROADWAY, OVERHEAD SIGN & BRIDGE	CAUTION
AIRPORT ROAD	JUNCTION BOX ON EXISTING SOUTH ABUTMENT TO SIGN ATTACHED TO BRIDGE		IDOT LIGHTING	ELECTRIC	BRIDGE	REMOVE DURING CONSTRUCTION
AIRPORT ROAD	49' LT STA 195+90 TO 50' LT STA 202+20		IDOT LIGHTING	ELECTRIC	ROADWAY & BRIDGE	CAUTION
I-474	92' RT STA 283+00 TO 116' RT STA 288+50		IDOT LIGHTING	ELECTRIC	BRIDGE	RELOCATE DURING CONSTRUCTION

HMA MIXTURE REQUIREMENT TABLE:

LOCATION(S):	MAINLINE			SHOULDER	
MIXTURE USES(S):	SURFACE	BINDER COURSE, VARIABLE DEPTH		SURFACE	BINDER COURSE, VARIABLE DEPTH
	POLYMER SURFACE (1.5" MIN./1.75" MAX.)	POLYMER TOP BINDER 2"	LOWER BINDER LIFTS (2.5" MIN./3.5" MAX)	SURFACE LIFT (1.5" MIN./1.75" MAX.)	LOWER LIFTS (2.5" MIN./3.5"MAX.)
AC/PG:	SBS OR SBR 70-28	SBS OR SBR 70-28	58-28	58-28	58-28
DESIGN AIR VOIDS:	4.0% @ N50	4.0% @ N50	4.0% @ N50	4.0% @ N50	4.0 @ N50
MIXTURE COMPOSITION (GRADATION MIXTURE):	IL 9.5	IL 9.5	IL 19.0	IL 9.5FG	IL 19.0
FRICTION AGGREGATE:	MIX "D"	N/A	N/A	N/A	N/A
QUALITY MANAGEMENT	QC/QA	QC/QA	QC/QA	QC/QA	QC/QA
MATERIAL TRANSFER DEVICE	YES	YES	YES	YES	YES
PAY ITEM NUMBER:	40604160	40603205	40603080	40603415	40603080

NOTES:

1) INDIVIDUAL LIFT THICKNESSES OF EACH MIX WILL BE NO LESS THAN THREE (3) TIMES NOMINAL MAXIMUM AGGREGATE SIZE AND NO MORE THAN FIVE (5) TIMES NOMINAL AGGREGATE MAXIMUM SIZE, UNLESS OTHERWISE APPROVED BY THE ENGINEER.

2) FOR DESIGN PURPOSES, MIXTURE WEIGHT FOR ALL MIXES IS DETERMINED TO BE 112.0 LB./S.Y./IN., UNLESS OTHERWISE NOTED.

3) SUBLOT SIZES FOR PFP AND QCP MIXES WILL BE 1,000 TONS, UNLESS OTHERWISE AGREED TO BY THE ENGINEER AND THE PAVING CONTRACTOR

	CODE NO.	ITEM	UNIT	URBAN TOTAL QUANTITY	CONSTRUCTION CODE 90% FED 10% STATE ROADWAY 0006	90% FED 10% STATE BRIDGE 0010	90% FED 10% STATE TRAFFIC SIGNALS 0021
	20100110	TREE REMOVAL (6 TO 15 UNITS DIAMETER)	UNIT	18	18		
	20100210	TREE REMOVAL (OVER 15 UNITS DIAMETER)	UNIT	20	20		
	20100500	TREE REMOVAL, ACRES	ACRE	1.25	1.25		
	20200100	EARTH EXCAVATION	CU YD	1015	1015		
*	20201200	REMOVAL AND DISPOSAL OF UNSUITABLE MATERIAL	CU YD	20	20		
	20400800	FURNISHED EXCAVATION	CU YD	530	530		
	21101505	TOPSOIL EXCAVATION AND PLACEMENT	CU YD	120	120		
	21101600	TOPSOIL FURNISH AND PLACE, VARIABLE DEPTH	SQ YD	6338	6338		
	25000200	SEEDING, CLASS 2	ACRE	0.5	0.5		
	25000305	SEEDING, CLASS 3A	ACRE	1.25	1.25		
	25000400	NITROGEN FERTILIZER NUTRIENT	POUND	135	135		
	25000500	PHOSPHORUS FERTILIZER NUTRIENT	POUND	135	135		
	25000600	POTASSIUM FERTILIZER NUTRIENT	POUND	135	135		
**	25000750	MOWING	ACRE	0.25	0.25		

* SPECIALTY ITEM
** 100% STATE
Δ 0042

CODE NO.	ITEM	UNIT	URBAN TOTAL QUANTITY	CONSTRUCTION CODE 90% FED 10% STATE ROADWAY 0006	90% FED 10% STATE BRIDGE 0010	90% FED 10% STATE TRAFFIC SIGNALS 0021
25100115	MULCH, METHOD 2	ACRE	1.75	1.75		
25100630	EROSION CONTROL BLANKET	SQ YD	7185	7185		
28000250	TEMPORARY EROSION CONTROL SEEDING	POUND	22	22		
28000305	TEMPORARY DITCH CHECKS	FOOT	110	110		
28000400	PERIMETER EROSION BARRIER	FOOT	1725	1725		
28000500	INLET AND PIPE PROTECTION	EACH	3	3		
28100107	STONE RIPRAP, CLASS A4	SQ YD	376	376		
28100805	STONE DUMPED RIPRAP, CLASS A3	TON	243	243		
28200200	FILTER FABRIC	SQ YD	607	607		
35101400	AGGREGATE BASE COURSE, TYPE B	TON	549	549		
40200900	AGGREGATE SURFACE COURSE, TYPE B	CU YD	6	6		
40600275	BITUMINOUS MATERIALS (PRIME COAT)	POUND	2866	2866		
40600295	POLYMERIZED BITUMINOUS MATERIALS (TACK COAT)	POUND	21335	21335		
40600370	LONGITUDINAL JOINT SEALANT	FOOT	4002	4002		

* SPECIALTY ITEM
** 100% STATE
Δ 0042

MODEL: Default
FILE NAME: P:\Civil_IDOT_DIST4\PTB 194-035 var PH I-II\3120032\WO 10 Airport Road Phase 2 3120032-10\CAD Sheets\0468886-sht-SOQ.dgn

The Upchurch Group
architects engineers surveyors
Professional Design Firms Corporation License No. 184-003401
123 North 15th Street Mattoon, IL 61938 Phone: 217.235.3177
e-mail: upchurchgroup@upchurchgroup.com

USER NAME = Sta42	DESIGNED - MJS	REVISED -
TUG PROJECT NO. 3120032-10	DRAWN -	REVISED -
PLOT SCALE = 2.0000 ' / in.	CHECKED - MJS	REVISED -
PLOT DATE = 6/21/2023	DATE -	REVISED -

STATE OF ILLINOIS
DEPARTMENT OF TRANSPORTATION

SUMMARY OF QUANTITIES
AIRPORT ROAD OVER I-474

SCALE: 2.0000 ' / in. | SHEET 2 OF 13 SHEETS | STA. TO STA.

F.A.I. RTE.	SECTION	COUNTY	TOTAL SHEETS	SHEET NO.
474	(72-3HB-4)BR	PEORIA	175	5

CONTRACT NO. 68886

ILLINOIS | FED. AID PROJECT

REV. 7/26/23

CODE NO.	ITEM	UNIT	URBAN TOTAL QUANTITY	CONSTRUCTION CODE 90% FED 10% STATE ROADWAY 0006	90% FED 10% STATE BRIDGE 0010	90% FED 10% STATE TRAFFIC SIGNALS 0021
40600982	HOT-MIX ASPHALT SURFACE REMOVAL - BUTT JOINT	SQ YD	3064	3064		
40600990	TEMPORARY RAMP	SQ YD	308	308		
40603080	HOT-MIX ASPHALT BINDER COURSE, IL-19.0, N50	TON	654	654		
40603205	POLYMERIZED HOT-MIX ASPHALT BINDER COURSE, IL-9.5, N50	TON	290	290		
40604160	POLYMERIZED HOT-MIX ASPHALT SURFACE COURSE, IL-9.5, MIX "D", N50	TON	1095	1095		
42000060	WELDED WIRE REINFORCEMENT	SQ YD	439	439		
42000080	PAVEMENT CONNECTOR (PCC) FOR BRIDGE APPROACH SLAB	SQ YD	439	439		
42400100	PORTLAND CEMENT CONCRETE SIDEWALK, 4"	SQ FT	396	396		
44000100	PAVEMENT REMOVAL	SQ YD	505	505		
44000155	HOT-MIX ASPHALT SURFACE REMOVAL, 1 1/2"	SQ YD	6045	6045		
44000156	HOT-MIX ASPHALT SURFACE REMOVAL, 1 3/4"	SQ YD	3451	3451		
44000300	CURB REMOVAL	FOOT	10	10		
44000500	COMBINATION CURB AND GUTTER REMOVAL	FOOT	2391	2391		
44003100	MEDIAN REMOVAL	SQ FT	1536	1536		

* SPECIALTY ITEM
** 100% STATE
Δ 0042

CODE NO.	ITEM	UNIT	URBAN TOTAL QUANTITY	CONSTRUCTION CODE 90% FED 10% STATE ROADWAY 0006	90% FED 10% STATE BRIDGE 0010	90% FED 10% STATE TRAFFIC SIGNALS 0021
44004250	PAVED SHOULDER REMOVAL	SQ YD	1450	1450		
44201765	CLASS D PATCHES, TYPE II, 10 INCH	SQ YD	185	185		
44201771	CLASS D PATCHES, TYPE IV, 10 INCH	SQ YD	185	185		
48101200	AGGREGATE SHOULDERS, TYPE B	TON	153	153		
48203003	HOT-MIX ASPHALT SHOULDERS, 1 1/2"	SQ YD	950	950		
48203004	HOT-MIX ASPHALT SHOULDERS, 1 3/4"	SQ YD	762	762		
48203033	HOT-MIX ASPHALT SHOULDERS, 9"	SQ YD	77	77		
50100100	REMOVAL OF EXISTING STRUCTURES	EACH	1		1	
50157300	PROTECTIVE SHIELD	SQ YD	1077		1077	
50200100	STRUCTURE EXCAVATION	CU YD	1345		1345	
50200400	ROCK EXCAVATION FOR STRUCTURES	CUYD	8		8	
50300225	CONCRETE STRUCTURES	CU YD	525.1		525.1	
50300255	CONCRETE SUPERSTRUCTURE	CU YD	903.7		903.7	
50300300	PROTECTIVE COAT	SQ YD	3693		3693	

* SPECIALTY ITEM
** 100% STATE
Δ 0042

CODE NO.	ITEM	UNIT	URBAN TOTAL QUANTITY	CONSTRUCTION CODE 90% FED 10% STATE ROADWAY 0006	90% FED 10% STATE BRIDGE 0010	90% FED 10% STATE TRAFFIC SIGNALS 0021
50301350	CONCRETE SUPERSTRUCTURE (APPROACH SLAB)	CU YD	260.4		260.4	
50500105	FURNISHING AND ERECTING STRUCTURAL STEEL	LSUM	1		1	
50500505	STUD SHEAR CONNECTORS	EACH	14910		14910	
50800205	REINFORCEMENT BARS, EPOXY COATED	POUND	359850		359850	
50800515	BAR SPLICERS	EACH	1118		1118	
50800530	MECHANICAL SPLICERS	EACH	184		184	
50901750	PARAPET RAILING	FOOT	534		534	
51100100	SLOPE WALL 4 INCH	SQ YD	1112		1112	
51201610	FURNISHING STEEL PILES HP12X63	FOOT	798		798	
51202305	DRIVING PILES	FOOT	798		798	
51203610	TEST PILE STEEL HP12X63	EACH	1		1	
51204650	PILE SHOES	EACH	28		28	
51500100	NAME PLATES	EACH	1		1	
52100010	ELASTOMERIC BEARING ASSEMBLY, TYPE I	EACH	14		14	

* SPECIALTY ITEM
** 100% STATE
Δ 0042

CODE NO.	ITEM	UNIT	URBAN TOTAL QUANTITY	CONSTRUCTION CODE 90% FED 10% STATE ROADWAY 0006	90% FED 10% STATE BRIDGE 0010	90% FED 10% STATE TRAFFIC SIGNALS 0021
52100520	ANCHOR BOLTS, 1"	EACH	56		56	
52100540	ANCHOR BOLTS, 1 1/2"	EACH	28		28	
52200020	TEMPORARY SOIL RETENTION SYSTEM	SQ FT	196		196	
54210182	PIPE ELBOW, 12"	EACH	6	6		
54262712	METAL FLARED END SECTIONS 12"	EACH	3	3		
58600101	GRANULAR BACKFILL FOR STRUCTURES	CU YD	364		364	
59100100	GEOCOMPOSITE WALL DRAIN	SQ YD	180		180	
60100060	CONCRETE HEADWALLS FOR PIPE DRAINS	EACH	4	4		
60106500	PIPE DRAINS, BITUMINOUS COATED CORRUGATED STEEL 12"	FOOT	245	245		
60146304	PIPE UNDERDRAINS FOR STRUCTURES 4"	FOOT	262		262	
60605000	COMBINATION CONCRETE CURB AND GUTTER, TYPE B-6.24	FOOT	252	252		
60608582	COMBINATION CONCRETE CURB AND GUTTER, TYPE M-4.24	FOOT	1942	1942		
60618300	CONCRETE MEDIAN SURFACE, 4 INCH	SQ FT	68	68		
60622320	CONCRETE MEDIAN, TYPE SM-4.24	SQ FT	1888	1888		

* SPECIALTY ITEM
** 100% STATE
Δ 0042

	CODE NO.	ITEM	UNIT	URBAN TOTAL QUANTITY	CONSTRUCTION CODE 90% FED 10% STATE ROADWAY 0006	90% FED 10% STATE BRIDGE 0010	90% FED 10% STATE TRAFFIC SIGNALS 0021
	61000050	CONCRETE THRUST BLOCKS	EACH	3	3		
*	63000001	STEEL PLATE BEAM GUARDRAIL, TYPE A, 6 FOOT POSTS	FOOT	475	475		
*	63100085	TRAFFIC BARRIER TERMINAL, TYPE 6	EACH	4	4		
*	63100167	TRAFFIC BARRIER TERMINAL, TYPE 1 (SPECIAL) TANGENT	EACH	3	3		
	63200310	GUARDRAIL REMOVAL	FOOT	1128	1128		
	64300260	IMPACT ATTENUATORS (FULLY REDIRECTIVE, NARROW), TEST LEVEL 3	EACH	2	2		
	64300920	IMPACT ATTENUATORS (SEVERE USE, WIDE), TEST LEVEL 3	EACH	2	2		
	64301090	ATTENUATOR BASE	SQ YD	26	26		
	66500105	WOVEN WIRE FENCE, 4'	FOOT	220	220		
*	66700205	PERMANENT SURVEY MARKERS, TYPE I	EACH	1	1		
*	66900200	NON-SPECIAL WASTE DISPOSAL	CU YD	160	160		
*	66900530	SOIL DISPOSAL ANALYSIS	EACH	1	1		
*	66901001	REGULATED SUBSTANCES PRE-CONSTRUCTION PLAN	L SUM	1	1		
*	66901003	REGULATED SUBSTANCES FINAL CONSTRUCTION REPORT	L SUM	1	1		

* SPECIALTY ITEM
** 100% STATE
Δ 0042

	CODE NO.	ITEM	UNIT	URBAN TOTAL QUANTITY	CONSTRUCTION CODE 90% FED 10% STATE ROADWAY 0006	90% FED 10% STATE BRIDGE 0010	90% FED 10% STATE TRAFFIC SIGNALS 0021
*	66901006	REGULATED SUBSTANCES MONITORING	CAL DAY	19	19		
	67000400	ENGINEER'S FIELD OFFICE, TYPE A	CAL MO	20	20		
	67100100	MOBILIZATION	LSUM	1		1	
	70103815	TRAFFIC CONTROL SURVEILLANCE	CAL DA	40	40		
	70106700	TEMPORARY RUMBLE STRIPS	EACH	8	8		
	70107025	CHANGEABLE MESSAGE SIGN	CAL DA	300	300		
	70200100	NIGHTTIME WORK ZONE LIGHTING	LSUM	1	1		
	70300100	SHORT TERM PAVEMENT MARKING	FOOT	11400	11400		
	70300150	SHORT TERM PAVEMENT MARKING REMOVAL	SQ FT	3800	3800		
	70400100	TEMPORARY CONCRETE BARRIER	FOOT	2850	2850		
	70400200	RELOCATE TEMPORARY CONCRETE BARRIER	FOOT	4850	4850		
	70600260	IMPACT ATTENUATORS, TEMPORARY (FULLY REDIRECTIVE, NARROW), TEST LEVEL 3	EACH	1	1		
	70600280	IMPACT ATTENUATORS, TEMPORARY (SEVERE USE, NARROW), TEST LEVEL 3	EACH	4	4		
	70600332	IMPACT ATTENUATORS, RELOCATE (FULLY REDIRECTIVE, NARROW), TEST LEVEL 3	EACH	1	1		

* SPECIALTY ITEM
** 100% STATE
Δ 0042

	CODE NO.	ITEM	UNIT	URBAN TOTAL QUANTITY	CONSTRUCTION CODE 90% FED 10% STATE ROADWAY 0006	90% FED 10% STATE BRIDGE 0010	90% FED 10% STATE TRAFFIC SIGNALS 0021
*	72000300	SIGN PANEL - TYPE 3	SQ FT	75	75		
*	72400330	REMOVE SIGN PANEL - TYPE 3	SQ FT	91	91		
*	72400730	RELOCATE SIGN PANEL - TYPE 3	SQ FT	91	91		
*	72501000	TERMINAL MARKER - DIRECT APPLIED	EACH	3	3		
*	73000100	WOOD SIGN SUPPORT	FOOT	160	160		
*	73304000	OVERHEAD SIGN STRUCTURE-BRIDGE MOUNTED	FOOT	13		13	
*	78009000	MODIFIED URETHANE PAVEMENT MARKING - LETTERS AND SYMBOLS	SQ FT	172	172		
*	78009004	MODIFIED URETHANE PAVEMENT MARKING - LINE 4"	FOOT	7120	7120		
*	78009006	MODIFIED URETHANE PAVEMENT MARKING - LINE 6"	FOOT	886	886		
*	78009008	MODIFIED URETHANE PAVEMENT MARKING - LINE 8"	FOOT	2166	2166		
*	78009012	MODIFIED URETHANE PAVEMENT MARKING - LINE 12"	FOOT	837	837		
*	78009024	MODIFIED URETHANE PAVEMENT MARKING - LINE 24"	FOOT	108	108		
*	78011000	GROOVING FOR RECESSED PAVEMENT MARKING, LETTERS, NUMBERS AND SYMBOLS	SQ FT	172	172		
*	78011025	GROOVING FOR RECESSED PAVEMENT MARKING 5"	FOOT	7120	7120		

* SPECIALTY ITEM
** 100% STATE
Δ 0042

MODEL: Default
FILE NAME: P:\Civil_IDOT_DIST4\PTB 194-035 var PH I-II\3120032\WO 10 Airport Road Phase 2 3120032-10\CAD Sheets\0468886-sht-SOQ.dgn

The Upchurch Group
architects engineers surveyors
Professional Design Firm Corporation License No. 184-003401
123 North 15th Street Mattoon, IL 61938 Phone: 217.235.3177
e-mail: upchurchgroup@upchurchgroup.com

USER NAME = Sta42	DESIGNED - MJS	REVISED -
TUG PROJECT NO. 3120032-10	DRAWN -	REVISED -
PLOT SCALE = 2.0000 ' / in.	CHECKED - MJS	REVISED -
PLOT DATE = 6/21/2023	DATE -	REVISED -

STATE OF ILLINOIS
DEPARTMENT OF TRANSPORTATION

SUMMARY OF QUANTITIES
AIRPORT ROAD OVER I-474

SCALE: 2.0000 ' / in. | SHEET 9 OF 13 SHEETS | STA. TO STA.

F.A.I. RTE.	SECTION	COUNTY	TOTAL SHEETS	SHEET NO.
474	(72-3HB-4)BR	PEORIA	175	12

CONTRACT NO. 68886
ILLINOIS FED. AID PROJECT

REV. 7/26/23

	CODE NO.	ITEM	UNIT	URBAN TOTAL QUANTITY	CONSTRUCTION CODE 90% FED 10% STATE ROADWAY 0006	90% FED 10% STATE BRIDGE 0010	90% FED 10% STATE TRAFFIC SIGNALS 0021
*	78011035	GROOVING FOR RECESSED PAVEMENT MARKING 7"	FOOT	886	886		
*	78011045	GROOVING FOR RECESSED PAVEMENT MARKING 9"	FOOT	2166	2166		
*	78011065	GROOVING FOR RECESSED PAVEMENT MARKING 13"	FOOT	837	837		
*	78011125	GROOVING FOR RECESSED PAVEMENT MARKING 25"	FOOT	108	108		
*	78100100	RAISED REFLECTIVE PAVEMENT MARKER	EACH	72	72		
*	78100200	TEMPORARY RAISED REFLECTIVE PAVEMENT MARKER	EACH	92	92		
*	78100300	REPLACEMENT REFLECTOR	EACH	20	20		
*	78200005	GUARDRAIL REFLECTORS, TYPE A	EACH	19	19		
*	78200020	CURB REFLECTORS	EACH	47	47		
	78300200	RAISED REFLECTIVE PAVEMENT MARKER REMOVAL	EACH	92	92		
*	81028320	UNDERGROUND CONDUIT, PVC, 1" DIA.	FOOT	15			15
*	81400700	HANDHOLE, PORTLAND CEMENT CONCRETE	EACH	1			1
*	81603000	UNIT DUCT, 600V, 2-1C NO.8, 1/C NO.8 GROUND, (XLP-TYPE USE), 3/4" DIA. POLYTHYLENE	FOOT	529			529
*	81702120	ELECTRIC CABLE IN CONDUIT, 600V (XLP-TYPE USE) 1/C NO. 8	FOOT	645			645

* SPECIALTY ITEM
** 100% STATE
Δ 0042

MODEL: Default
FILE NAME: P:\Civil_IDOT_DIST4\PTB 194-035 var PH I-II\ 3120032\WO 10 Airport Road Phase 2 3120032-10\CAD Sheets\0468886-sht-SOQ.dgn

The Upchurch Group
architects engineers surveyors
Professional Design Firm Corporation License No. 184-003401
123 North 15th Street Mattoon, IL 61938 Phone: 217.235.3177
e-mail: upchurchgroup@upchurchgroup.com

USER NAME = Sta42	DESIGNED - MJS	REVISED -
TUG PROJECT NO. 3120032-10	DRAWN -	REVISED -
PLOT SCALE = 2.0000 ' / in.	CHECKED - MJS	REVISED -
PLOT DATE = 6/21/2023	DATE -	REVISED -

STATE OF ILLINOIS
DEPARTMENT OF TRANSPORTATION

SUMMARY OF QUANTITIES
AIRPORT ROAD OVER I-474

SCALE: 2.0000 ' / in. | SHEET 10 OF 13 SHEETS | STA. TO STA.

F.A.I. RTE.	SECTION	COUNTY	TOTAL SHEETS	SHEET NO.
474	(72-3HB-4)BR	PEORIA	175	13
		CONTRACT NO. 68886		
		ILLINOIS FED. AID PROJECT		

REV. 8/16/23 REV. 7/26/23

	CODE NO.	ITEM	UNIT	URBAN TOTAL QUANTITY	CONSTRUCTION CODE 90% FED 10% STATE ROADWAY 0006	90% FED 10% STATE BRIDGE 0010	90% FED 10% STATE TRAFFIC SIGNALS 0021
*	83600356	LIGHT POLE FOUNDATION, METAL, 15" BOLT CIRCLE, 8 5/8" X 6'	EACH	1			1
*	83800650	BREAKAWAY DEVICE, COUPLING WITH STAINLESS STEEL SCREEN	EACH	4			4
*	84400105	RELOCATE EXISTING LIGHTING UNIT	EACH	1			1
*	87301900	ELECTRIC CABLE IN CONDUIT, EQUIPMENT GROUNDING CONDUCTOR, NO. 6 1C	FOOT	24.5			25
*	87900200	DRILL EXISTING HANDHOLE	EACH	1			1
	X0322194	POLYMER MODIFIED PORTLAND CEMENT MORTAR	SQ FT	284	284		
*	X0322281	WIDE AREA VIDEO DETECTION SYSTEM COMPLETE	EACH	1			1
	X6060095	CLASS SI CONCRETE (MISCELLANEOUS)	CU YD	32	32		
	X4400110	TEMPORARY PAVEMENT REMOVAL	SQ YD	1300	1300		
	X4400196	HOT-MIX ASPHALT SURFACE REMOVAL, SPECIAL	SQ YD	300	300		
	X5030250	BRIDGE DECK GROOVING (LONGITUDINAL)	SQ YD	2571		2571	
	X6010003	PIPE DRAIN REMOVAL	FOOT	59	59		
	X6020082	INLETS, TYPE G-1	EACH	3	3		
	X6431120	REMOVE IMPACT ATTENUATOR SAND MODULE	EACH	2	2		

* SPECIALTY ITEM
** 100% STATE
Δ 0042

The Upchurch Group
architects engineers surveyors
Professional Design Firms Corporation License No. 184-003401
123 North 15th Street Mattoon, IL 61938 Phone: 217.235.3177
e-mail: upchurchgroup@upchurchgroup.com

USER NAME = Sta42	DESIGNED - MJS	REVISED -
TUG PROJECT NO. 3120032-10	DRAWN -	REVISED -
PLOT SCALE = 2.0000 ' / in.	CHECKED - MJS	REVISED -
PLOT DATE = 6/21/2023	DATE -	REVISED -

STATE OF ILLINOIS
DEPARTMENT OF TRANSPORTATION

SUMMARY OF QUANTITIES
AIRPORT ROAD OVER I-474

SCALE: 2.0000 ' / in. | SHEET 11 OF 13 SHEETS | STA. TO STA.

F.A.I. RTE.	SECTION	COUNTY	TOTAL SHEETS	SHEET NO.
474	(72-3HB-4)BR	PEORIA	175	14

CONTRACT NO. 68886

ILLINOIS | FED. AID PROJECT

REV. 7/26/23 REV. 7/5/23

CODE NO.	ITEM	UNIT	URBAN TOTAL QUANTITY	CONSTRUCTION CODE 90% FED 10% STATE ROADWAY 0006	90% FED 10% STATE BRIDGE 0010	90% FED 10% STATE TRAFFIC SIGNALS 0021
X7010216	TRAFFIC CONTROL AND PROTECTION, (SPECIAL)	LSUM	1	1		
X7830050	RAISED PAVEMENT LANE MARKER, REFLECTOR REMOVAL	EACH	20	20		
X8440128	REMOVE EXISTING LIGHTING SYSTEM	L SUM	1			1
Z0001002	GUARDRAIL AGGREGATE EROSION CONTROL	TON	193	193		
Z0004552	APPROACH SLAB REMOVAL	SQ YD	711	711		
Z0013798	CONSTRUCTION LAYOUT	LSUM	1	1		
Z0018002	DRAINAGE SCUPPERS, DS-11	EACH	4		4	
Z0022800	FENCE REMOVAL	FOOT	220	220		
Z0024475	TUBULAR MARKER	EACH	44	44		
Z0029090	DIAMOND GRINDING (BRIDGE SECTION)	SQ YD	2420		2420	
* Z0033068	TRAFFIC SIGNAL BATTERY BACKUP SYSTEM	EACH	1			1
Z0034105	MATERIAL TRANSFER DEVICE	TON	1650	1650		
Z0051200	REMOVING AND REPLACING EXPANSION JOINT	FOOT	50	50		
Z0062456	TEMPORARY PAVEMENT	SQ YD	2655	2655		

* SPECIALTY ITEM
** 100% STATE
Δ 0042

The Upchurch Group
architects engineers surveyors
Professional Design Firm Corporation License No. 184-003401
123 North 15th Street Mattoon, IL 61938 Phone: 217.235.3177
e-mail: upchurchgroup@upchurchgroup.com

USER NAME = Sta42	DESIGNED - MJS	REVISED -
TUG PROJECT NO. 3120032-10	DRAWN -	REVISED -
PLOT SCALE = 2.0000 ' / in.	CHECKED - MJS	REVISED -
PLOT DATE = 6/21/2023	DATE -	REVISED -

STATE OF ILLINOIS
DEPARTMENT OF TRANSPORTATION

SUMMARY OF QUANTITIES
AIRPORT ROAD OVER I-474

SCALE: 2.0000 ' / in. | SHEET 12 OF 13 SHEETS | STA. TO STA.

F.A.I. RTE.	SECTION	COUNTY	TOTAL SHEETS	SHEET NO.
474	(72-3HB-4)BR	PEORIA	175	15

CONTRACT NO. 68886
ILLINOIS FED. AID PROJECT

REV. 8/16/23REV. 7/26/23

	CODE NO.	ITEM	UNIT	URBAN TOTAL QUANTITY	CONSTRUCTION CODE 90% FED 10% STATE ROADWAY 0006	90% FED 10% STATE BRIDGE 0010	90% FED 10% STATE TRAFFIC SIGNALS 0021
	Z0064540	SEEPAGE COLLAR	EACH	3	3		
Ø	Z0076600	TRAINEES	HOUR	1,000	1,000		
Ø	Z0076604	TRAINEES TRAINING PROGRAM GRADUATE	HOUR	1,000	1,000		

* SPECIALTY ITEM
** 100% STATE
Ø 0042

The Upchurch Group
architects engineers surveyors
Professional Design Firm Corporation License No. 184-003401
123 North 15th Street Mattoon, IL 61938 Phone: 217.235.3177
e-mail: upchurchgroup@upchurchgroup.com

USER NAME = Sta42 | DESIGNED - MJS | REVISED -
TUG PROJECT NO. 3120032-10 | DRAWN - | REVISED -
PLOT SCALE = 2.0000 ' / in. | CHECKED - MJS | REVISED -
PLOT DATE = 6/21/2023 | DATE - | REVISED -

STATE OF ILLINOIS
DEPARTMENT OF TRANSPORTATION

SUMMARY OF QUANTITIES
AIRPORT ROAD OVER I-474

SCALE: 2.0000 ' / in. | SHEET 13 OF 13 SHEETS | STA. TO STA.

F.A.I. RTE.	SECTION	COUNTY	TOTAL SHEETS	SHEET NO.
474	(72-3HB-4)BR	PEORIA	175	16

CONTRACT NO. 68886
ILLINOIS FED. AID PROJECT

REV. 8/3/23 REV. 7/26/23

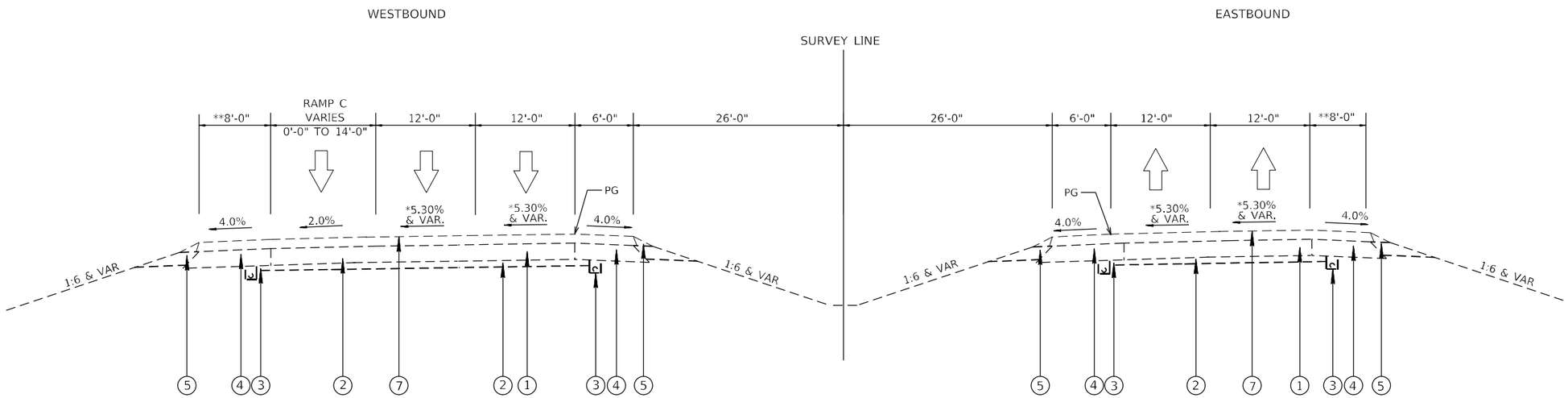

EXISTING TYPICAL SECTION I–474

WESTBOUND AND EASTBOUND
STA 274+26 TO STA 282+88
RAMP C
STA 18+40.7 TO STA 24+96

*SEE SUPERELEVATION TABLE

**OUTSIDE SHOULDERS TRANSITION FROM 8' HMA ON RAMPS
TO 8' HMA AND 2' AGGREGATE ON MAINLINE AWAY FROM BRIDGE

LEGEND

EXISTING ITEMS

1 EXISTING 8" C.R.P.C.C. PAVEMENT
2 EXISTING 4" STABILIZED SUB-BASE
3 EXISTING 4" PIPE UNDERDRAIN
4 EXISTING HOT-MIX ASPHALT SHOULDERS
5 EXISTING AGGREGATE SHOULDERS, TYPE B
6 EXISTING OVERLAY, 3 1/4"
7 EXISTING OVERLAY, 3 3/4"
8 EXISTING GUARDRAIL
9 EXISTING IMPACT ATTENUATOR
10 EXISTING STRUCTURE
11 EXISTING CONCRETE SLOPEWALL

LEGEND

STRUCTURE REMOVAL
TBR TO BE REMOVED

CURVE NO.	SUPERELEVATION TRANSITION	P.C. STATION	P.T. STATION	P.I. STATION	RATE
1	STA 246+89.56 TO 249+81.79 / STA 282+05.29 TO 284+98.29	248+99.73 (BK) /248+98.96 (AH)	282+88.12	267+14.22	5.30%
RAMP C CURVE 3	-	19+07.85	24+96.08	22+02.9	2%

MODEL: Default
FILE NAME: P:\Civil\ IDOT DISTAUPTB 194-035 var PH I-II 3120032\WO 10 Airport Road Phase 2 3120032-10\CAD Sheets\D468886-sht-typical-EX 474.dgn

The Upchurch Group
architects engineers surveyors
Professional Design Firm Corporation License No. 184-003001
123 North 15th Street Mattoon, IL 61938 Phone: 217.235.3177
e-mail: upchurchgroup@upchurchgroup.com

USER NAME = Sta42	DESIGNED - MJS	REVISED -
TUG PROJECT NO. 3120032-10	DRAWN -	REVISED -
PLOT SCALE = 100.0000 ' / in.	CHECKED - MJS	REVISED -
PLOT DATE = 6/19/2023	DATE -	REVISED -

STATE OF ILLINOIS
DEPARTMENT OF TRANSPORTATION

EXISTING TYPICAL SECTION – I–474
AIRPORT ROAD OVER I–474

SCALE: 100.0000 ' / in. SHEET OF SHEETS STA. TO STA.

F.A.I. RTE.	SECTION	COUNTY	TOTAL SHEETS	SHEET NO.
474	(72-3HB-4)BR	PEORIA	175	17
		CONTRACT NO. 68886		
	ILLINOIS	FED. AID PROJECT		

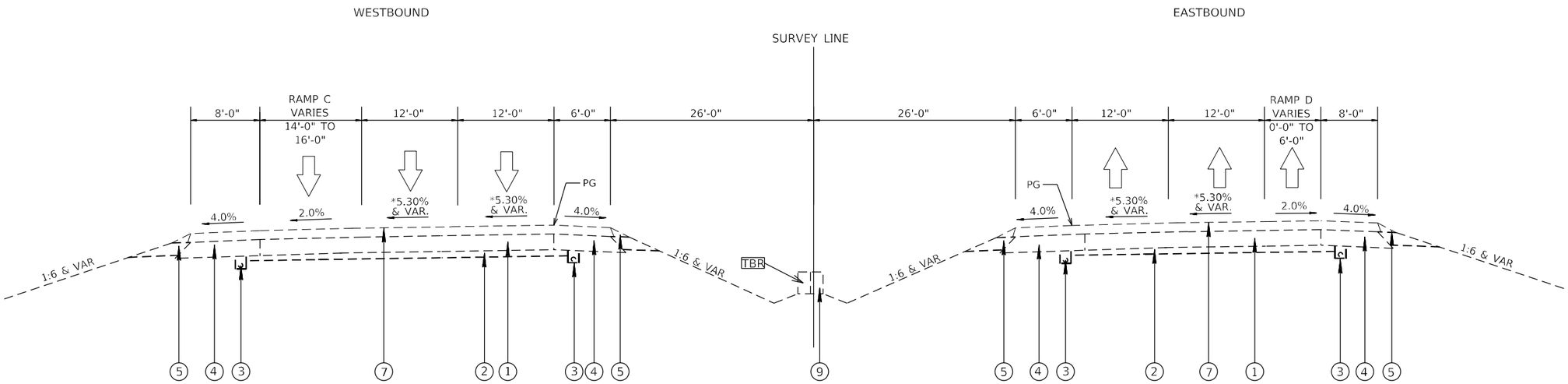

EXISTING TYPICAL SECTION I–474

WESTBOUND AND EASTBOUND
STA 282+88 TO STA 284+26
RAMP C
STA 16+88 TO STA 18+40.7
RAMP D
STA 0+00 TO STA 1+29

*SEE SUPERELEVATION TABLE

LEGEND

EXISTING ITEMS

1 EXISTING 8" C.R.P.C.C. PAVEMENT
2 EXISTING 4" STABILIZED SUB-BASE
3 EXISTING 4" PIPE UNDERDRAIN
4 EXISTING HOT-MIX ASPHALT SHOULDERS
5 EXISTING AGGREGATE SHOULDERS, TYPE B
6 EXISTING OVERLAY, 3 1/4"
7 EXISTING OVERLAY, 3 3/4"
8 EXISTING GUARDRAIL
9 EXISTING IMPACT ATTENUATOR
10 EXISTING STRUCTURE
11 EXISTING CONCRETE SLOPEWALL

LEGEND

STRUCTURE REMOVAL
TBR TO BE REMOVED

CURVE NO.	SUPERELEVATION TRANSITION	P.C. STATION	P.T. STATION	P.I. STATION	RATE
1	STA 246+89.56 TO 249+81.79 / STA 282+05.29 TO 284+98.29	248+99.73 (BK) /248+98.96 (AH)	282+88.12	267+14.22	5.30%

MODEL: Default
FILE NAME: P:\CWR_IDOT DISTAUPTB 194-035 var PH I-II 3120032\WO 10 Airport Road Phase 2 3120032-10\CAD Sheets\D468886-sht-typical-FX_474.dgn

The Upchurch Group
architects engineers surveyors
Professional Design Firm Corporation License No. 184-003401
123 North 15th Street Mattoon, IL 61938 Phone: 217.235.3177
e-mail: upchurchgroup@upchurchgroup.com

USER NAME = Sta42	DESIGNED - MJS	REVISED -
TUG PROJECT NO. 3120032-10	DRAWN -	REVISED -
PLOT SCALE = 100.0000 ' / in.	CHECKED - MJS	REVISED -
PLOT DATE = 6/19/2023	DATE -	REVISED -

STATE OF ILLINOIS
DEPARTMENT OF TRANSPORTATION

EXISTING TYPICAL SECTION – I–474
AIRPORT ROAD OVER I–474

SCALE: 100.0000 ' / in. SHEET OF SHEETS STA. TO STA.

F.A.I. RTE.	SECTION	COUNTY	TOTAL SHEETS	SHEET NO.
474	(72-3HB-4)BR	PEORIA	175	18

CONTRACT NO. 68886

ILLINOIS FED. AID PROJECT

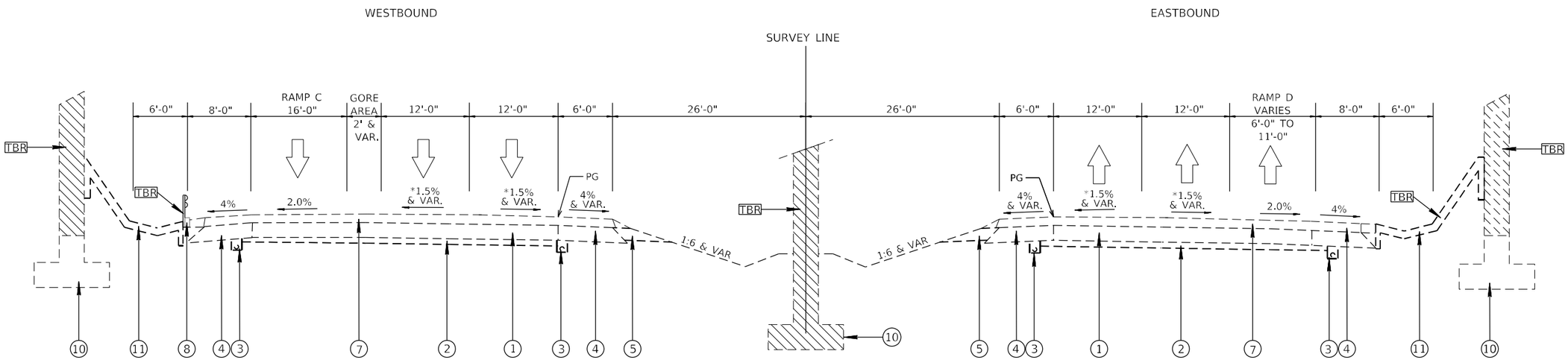

EXISTING TYPICAL SECTION I–474

WESTBOUND AND EASTBOUND
STA 284+26 TO STA 285+20
RAMP C
STA 15+95 TO STA 16+88
RAMP D
STA 1+29 TO STA 2+20

*SEE SUPERELEVATION TABLE

GUARDRAIL LOCATED NB STA 12+59 TO STA 16+83

LEGEND

EXISTING ITEMS

1 EXISTING 8" C.R.P.C.C. PAVEMENT
2 EXISTING 4" STABILIZED SUB-BASE
3 EXISTING 4" PIPE UNDERDRAIN
4 EXISTING HOT-MIX ASPHALT SHOULDERS
5 EXISTING AGGREGATE SHOULDERS, TYPE B
6 EXISTING OVERLAY, 3 1/4"
7 EXISTING OVERLAY, 3 3/4"
8 EXISTING GUARDRAIL
9 EXISTING IMPACT ATTENUATOR
10 EXISTING STRUCTURE
11 EXISTING CONCRETE SLOPEWALL

LEGEND

STRUCTURE REMOVAL
TBR TO BE REMOVED

CURVE NO.	SUPERELEVATION TRANSITION	P.C. STATION	P.T. STATION	P.I. STATION	RATE
1	STA 246+89.56 TO 249+81.79 / STA 282+05.29 TO 284+98.29	248+99.73 (BK) /248+98.96 (AH)	282+88.12	267+14.22	5.30%

MODEL: Default
FILE NAME: P:\Civil\ IDOT DISTAUPTB 194-035 var PH I-II 3120032\WO 10 Airport Road Phase 2 3120032-10\CAD Sheets\D468886-sht-typical-EX 474.dgn

The Upchurch Group
architects engineers surveyors
Professional Design Firm Corporation License No. 184-003001
e-mail: upchurchgroup@upchurchgroup.com
123 North 15th Street Mattoon, IL 61938 Phone: 217.235.3177

USER NAME = Sta42	DESIGNED - MJS	REVISED -
TUG PROJECT NO. 3120032-10	DRAWN -	REVISED -
PLOT SCALE = 100.0000 ' / in.	CHECKED - MJS	REVISED -
PLOT DATE = 6/19/2023	DATE -	REVISED -

STATE OF ILLINOIS
DEPARTMENT OF TRANSPORTATION

EXISTING TYPICAL SECTION – I–474
AIRPORT ROAD OVER I–474

SCALE: 100.0000 ' / in. SHEET OF SHEETS STA. TO STA.

F.A.I. RTE.	SECTION	COUNTY	TOTAL SHEETS	SHEET NO.
474	(72-3HB-4)BR	PEORIA	175	19

CONTRACT NO. 68886

ILLINOIS FED. AID PROJECT

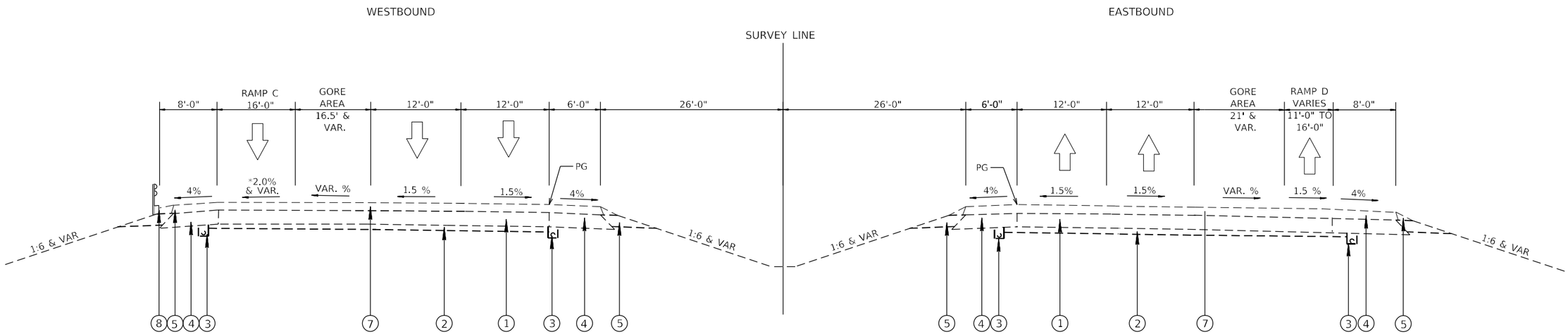

EXISTING TYPICAL SECTION I–474

WESTBOUND AND EASTBOUND
STA 285+20 TO STA 289+47
RAMP C
STA 11+82 TO STA 15+95
RAMP D
STA 2+20 TO STA 6+75

*SEE SUPERELEVATION TABLE

GUARDRAIL LOCATED NB STA 12+59 TO STA 16+83

LEGEND

EXISTING ITEMS

1 EXISTING 8" C.R.P.C.C. PAVEMENT
2 EXISTING 4" STABILIZED SUB-BASE
3 EXISTING 4" PIPE UNDERDRAIN
4 EXISTING HOT-MIX ASPHALT SHOULDERS
5 EXISTING AGGREGATE SHOULDERS, TYPE B
6 EXISTING OVERLAY, 3 1/4"
7 EXISTING OVERLAY, 3 3/4"
8 EXISTING GUARDRAIL
9 EXISTING IMPACT ATTENUATOR
10 EXISTING STRUCTURE
11 EXISTING CONCRETE SLOPEWALL

LEGEND

STRUCTURE REMOVAL
TBR TO BE REMOVED

CURVE NO.	SUPERELEVATION TRANSITION	P.C. STATION	P.T. STATION	RATE
RAMP C CURVE 2	10+44.33	11+47.42	12+47.23	8.00%
RAMP D CURVE 1	6+62.4	7+62.98	8+62.4	8.00%

MODEL: Default
FILE NAME: P:\Civil_IDOT_DIST4\PTB 194-033 var PH I-II 3120032\VOL 10 Airport Road Phase 2 3120032-10\CAD Sheets\D46886-sht-typical-FX_474.dgn

The Upchurch Group
architects engineers surveyors
Professional Design Firm Corporation License No. 184-003-001
123 North 15th Street Mattoon, IL 61938
Phone: 217.235.3177
e-mail: upchurchgroup@upchurchgroup.com

USER NAME = Sta42	DESIGNED - MJS	REVISED -
TUG PROJECT NO. 3120032-10	DRAWN -	REVISED -
PLOT SCALE = 100.0000 ' / in.	CHECKED - MJS	REVISED -
PLOT DATE = 6/19/2023	DATE -	REVISED -

STATE OF ILLINOIS
DEPARTMENT OF TRANSPORTATION

EXISTING TYPICAL SECTION – I–474
AIRPORT ROAD OVER I–474

SCALE: 100.0000 ' / in. SHEET OF SHEETS STA. TO STA.

F.A.I. RTE.	SECTION	COUNTY	TOTAL SHEETS	SHEET NO.
474	(72-3HB-4)BR	PEORIA	175	20
		CONTRACT NO. 68886		
	ILLINOIS	FED. AID PROJECT		

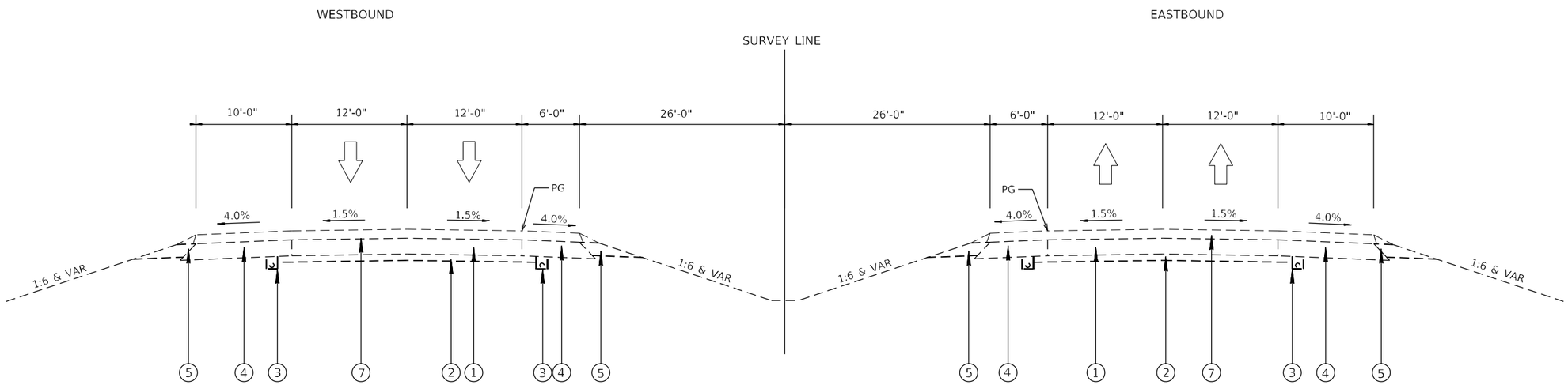

EXISTING TYPICAL SECTION I–474

WESTBOUND AND EASTBOUND
STA 289+47 TO STA 295+20

LEGEND

EXISTING ITEMS

1 EXISTING 8" C.R.P.C.C. PAVEMENT
2 EXISTING 4" STABILIZED SUB-BASE
3 EXISTING 4" PIPE UNDERDRAIN
4 EXISTING HOT-MIX ASPHALT SHOULDERS
5 EXISTING AGGREGATE SHOULDERS, TYPE B
6 EXISTING OVERLAY, 3 1/4"
7 EXISTING OVERLAY, 3 3/4"
8 EXISTING GUARDRAIL
9 EXISTING IMPACT ATTENUATOR
10 EXISTING STRUCTURE
11 EXISTING CONCRETE SLOPEWALL

MODEL: Default
FILE NAME: P:\Civil_IDOT_DIST4\PTB_194-035_var PH 1,II 3120032\WO 10 Airport Road Phase 2 3120032-10\CAD Sheets\01488886-int-typical-EX_474.dgn

The Upchurch Group
architects engineers surveyors
Professional Design Firm Corporation License No. 184-001001
123 North 15th Street
Mattoon, IL 61938
Phone: 217.235.3177
e-mail: upchurchgroup@upchurchgroup.com

USER NAME = Sta42	DESIGNED - MJS	REVISED -
TUG PROJECT NO. 3120032-10	DRAWN -	REVISED -
PLOT SCALE = 100.0000 ' / in.	CHECKED - MJS	REVISED -
PLOT DATE = 6/19/2023	DATE -	REVISED -

STATE OF ILLINOIS
DEPARTMENT OF TRANSPORTATION

EXISTING TYPICAL SECTION – I–474
AIRPORT ROAD OVER I–474

SCALE: 100.0000 ' / in. SHEET OF SHEETS STA. TO STA.

F.A.I. RTE.	SECTION	COUNTY	TOTAL SHEETS	SHEET NO.
474	(72-3HB-4)BR	PEORIA	175	21
		CONTRACT NO. 68886		
	ILLINOIS	FED. AID PROJECT		

LEGEND

1. EXISTING HMA OVERLAY
   - -POLY. HMA SURFACE COURSE, 1 1/2"
   - -LEVELING BINDER MM T2, 1"
2. EXISTING HMA SHOULDER
3. EXISTING CURB AND GUTTER, TYPE B-6.24
4. EXISTING AGGREGATE SHOULDER
5. EXISTING TURF MEDIAN
6. EXISTING PCC PAVEMENT, 10"
7. EXISTING PCC SIDEWALK, 4"
8. EXISTING STEEL PLATE BEAM GUARDRAIL
9. EXISTING GUARDRAIL AGGREGATE EROSION CONTROL
10. EXISTING PCC MEDIAN CAP
11. EXISTING CURB AND GUTTER, TYPE B-9.24 WITH HMA OVERLAY

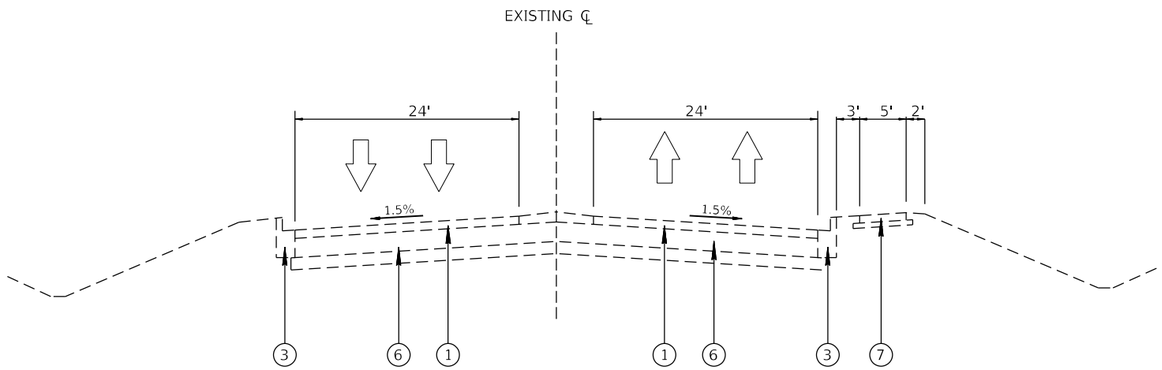

EXISTING TYPICAL SECTION AIRPORT ROAD

STA 172+13 TO STA 177+50

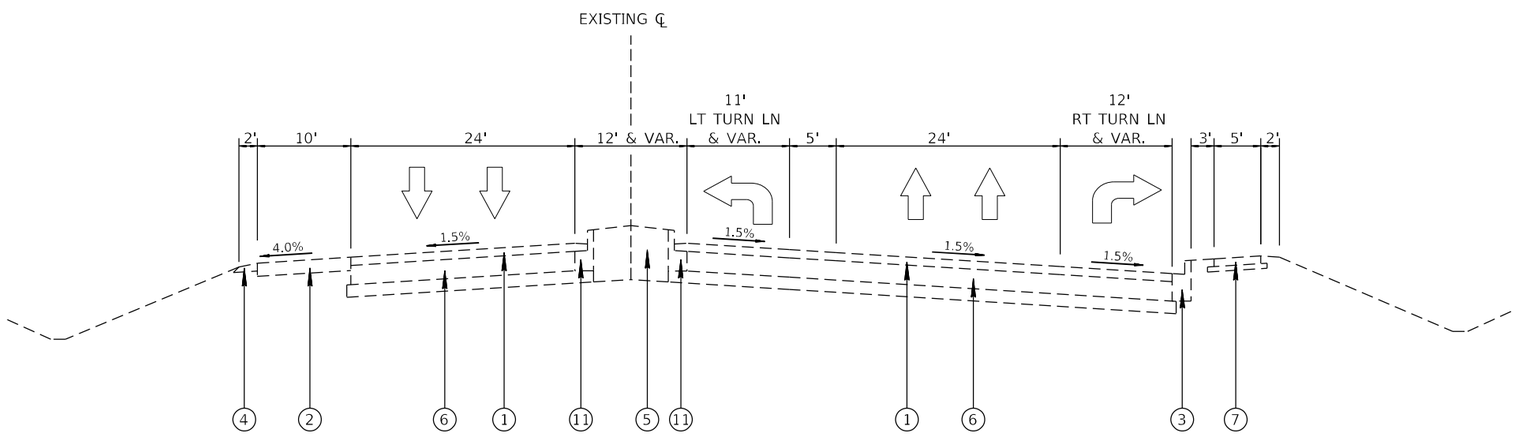

EXISTING TYPICAL SECTION AIRPORT ROAD

STA 177+50 TO STA 185+85

MODEL: Default
FILE NAME: P:\Civil_IDOT_DIST4\PTB_194-035_var PH I,II 3120032\WO_10 Airport Road Phase 2 3120032-10\CAD Sheets\D1488886-sht-typical-EX_Airport.dgn

The Upchurch Group
architects engineers surveyors
Professional Design Firm Corporation License No. 184-001001
123 North 15th Street Mattoon, IL 61938 Phone: 217.235.3177
e-mail: upchurchgroup@upchurchgroup.com

USER NAME = Sta42	DESIGNED - MJS	REVISED -
TUG PROJECT NO. 3120032-10	DRAWN -	REVISED -
PLOT SCALE = 100.0000 ' / in.	CHECKED - MJS	REVISED -
PLOT DATE = 6/19/2023	DATE -	REVISED -

STATE OF ILLINOIS
DEPARTMENT OF TRANSPORTATION

EXISTING TYPICAL SECTION – AIRPORT ROAD
AIRPORT ROAD OVER I-474

SCALE: 100.0000 ' / in. SHEET OF SHEETS STA. TO STA.

F.A.I. RTE.	SECTION	COUNTY	TOTAL SHEETS	SHEET NO.
474	(72-3HB-4)BR	PEORIA	175	22

CONTRACT NO. 68886

ILLINOIS FED. AID PROJECT

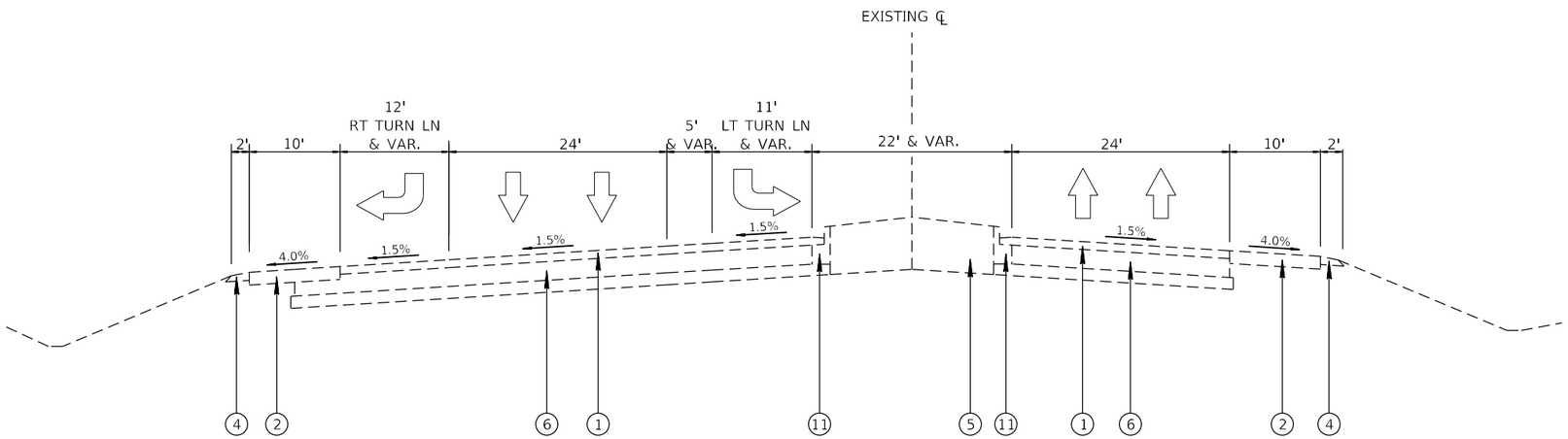

EXISTING TYPICAL SECTION AIRPORT ROAD

STA 185+85 TO STA 193+19.30

LEGEND

1. EXISTING HMA OVERLAY
   - -POLY. HMA SURFACE COURSE, 1 1/2"
   - -LEVELING BINDER MM T2, 1"
2. EXISTING HMA SHOULDER
3. EXISTING CURB AND GUTTER, TYPE B-6.24
4. EXISTING AGGREGATE SHOULDER
5. EXISTING TURF MEDIAN
6. EXISTING PCC PAVEMENT, 10"
7. EXISTING PCC SIDEWALK, 4"
8. EXISTING STEEL PLATE BEAM GUARDRAIL
9. EXISTING GUARDRAIL AGGREGATE EROSION CONTROL
10. EXISTING PCC MEDIAN CAP
11. EXISTING CURB AND GUTTER, TYPE B-9.24 WITH HMA OVERLAY

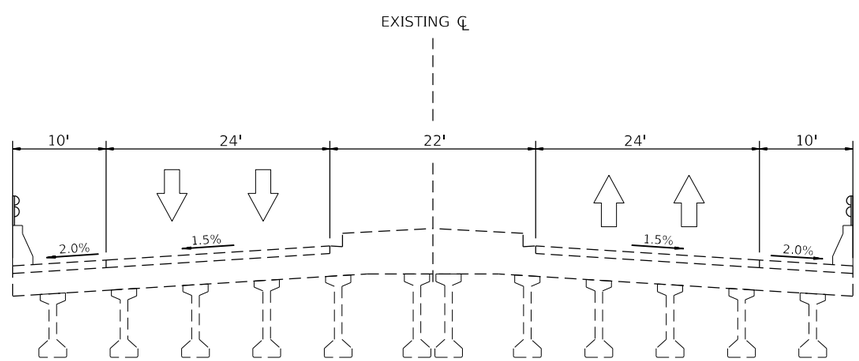

EXISTING BRIDGE TYPICAL SECTION

STA 193+19.30 TO STA 195+80.72

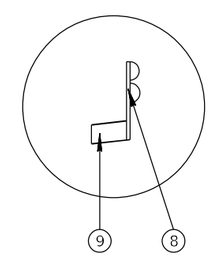

LT GUARDRAIL

AIRPORT ROAD
STA 190+95 TO STA 193+30
STA 195+92 TO STA 207+50

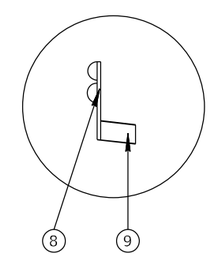

RT GUARDRAIL

AIRPORT ROAD
STA 191+30 TO STA 193+30
STA 205+10 TO STA 206+85

MODEL: Default
FILE NAME: PxCivil_IDOT_DIST4(PTB_194-035_var PH I,II) 3120032\WO_10 Airport Road Phase 2 3120032-10\CAD Sheets\01488886-rht-typical-EX_Airport.dgn

The Upchurch Group
architects engineers surveyors
Professional Design Firm Corporation License No. 184-001001
123 North 15th Street Mattoon, IL 61938 Phone: 217.235.3177
e-mail: upchurchgroup@upchurchgroup.com

USER NAME = Sta42	DESIGNED - MJS	REVISED -
TUG PROJECT NO. 3120032-10	DRAWN -	REVISED -
PLOT SCALE = 100.0000 ' / in.	CHECKED - MJS	REVISED -
PLOT DATE = 6/19/2023	DATE -	REVISED -

STATE OF ILLINOIS
DEPARTMENT OF TRANSPORTATION

EXISTING TYPICAL SECTION – AIRPORT ROAD
AIRPORT ROAD OVER I-474

SCALE: 100.0000 ' / in. SHEET OF SHEETS STA. TO STA.

F.A.I. RTE.	SECTION	COUNTY	TOTAL SHEETS	SHEET NO.
474	(72-3HB-4)BR	PEORIA	175	23
		CONTRACT NO. 68886		
	ILLINOIS	FED. AID PROJECT		

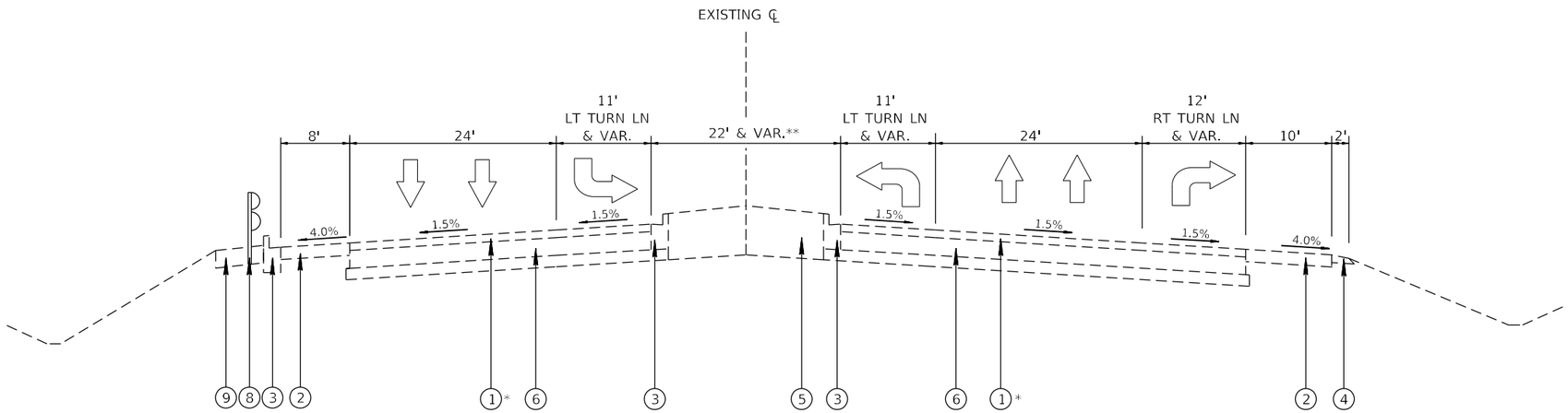

EXISTING TYPICAL SECTION AIRPORT ROAD

STA 195+80.72 TO STA 207+50

LEGEND

1. EXISTING HMA OVERLAY
   - -POLY. HMA SURFACE COURSE, 1 1/2"
   - -LEVELING BINDER MM T2, 1"
2. EXISTING HMA SHOULDER
3. EXISTING CURB AND GUTTER, TYPE B-6.24
4. EXISTING AGGREGATE SHOULDER
5. EXISTING TURF MEDIAN
6. EXISTING PCC PAVEMENT, 10"
7. EXISTING PCC SIDEWALK, 4"
8. EXISTING STEEL PLATE BEAM GUARDRAIL
9. EXISTING GUARDRAIL AGGREGATE EROSION CONTROL
10. EXISTING PCC MEDIAN CAP
11. EXISTING CURB AND GUTTER, TYPE B-9.24 WITH HMA OVERLAY

* PREVIOUS BINDER BUILDUP OF UNKNOWN DEPTHS >3/4"
STA 196+30 TO STA 201+50

** CAPPED MEDIAN STA 201+50 TO STA 207+50

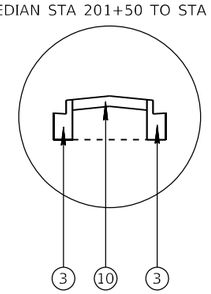

MODEL: Default
FILE NAME: P:\Civil_IDOT_DIST4\PTB 194-033 var PH I-II 3120032\VOL 10 Airport Road Phase 2 3120032-10\CAD Sheets\D468886-sht-typical-FX_Airport.dgn

The Upchurch Group
architects engineers surveyors
Professional Design Firm Corporation License No. 184-003-001
123 North 15th Street
Mattoon, IL 61938
Phone: 217.235.3177
e-mail: upchurchgroup@upchurchgroup.com

USER NAME = Sta42	DESIGNED - MJS	REVISED -
TUG PROJECT NO. 3120032-10	DRAWN -	REVISED -
PLOT SCALE = 100.0000 ' / in.	CHECKED - MJS	REVISED -
PLOT DATE = 6/19/2023	DATE -	REVISED -

STATE OF ILLINOIS
DEPARTMENT OF TRANSPORTATION

EXISTING TYPICAL SECTION – AIRPORT ROAD
AIRPORT ROAD OVER I–474

SCALE: 100.0000 ' / in. SHEET OF SHEETS STA. TO STA.

F.A.I. RTE.	SECTION	COUNTY	TOTAL SHEETS	SHEET NO.
474	(72-3HB-4)BR	PEORIA	175	24
		CONTRACT NO. 68886		
	ILLINOIS	FED. AID PROJECT		

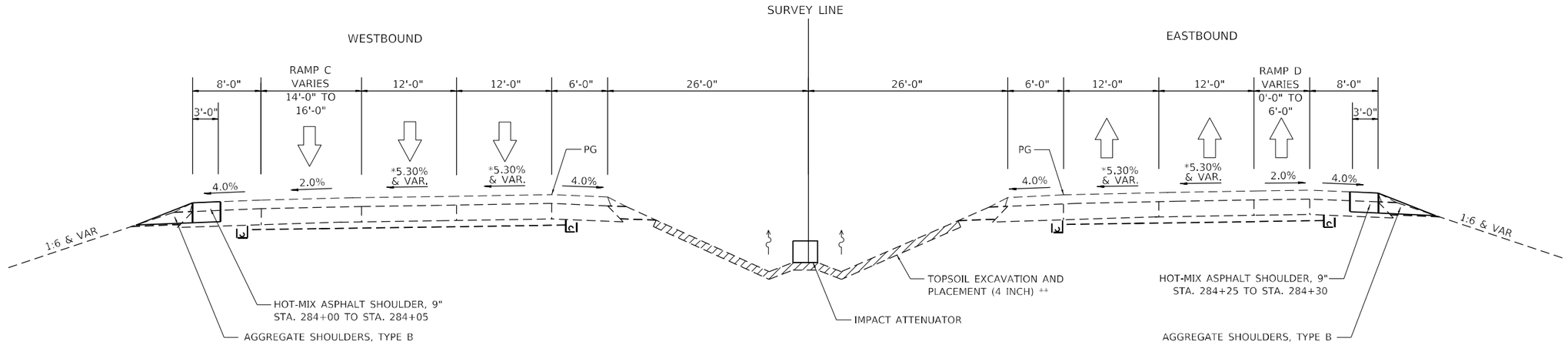

PROPOSED TYPICAL SECTION I–474

WESTBOUND AND EASTBOUND
STA 282+88 TO STA 284+30
RAMP C
STA 16+88 TO STA 18+40.7
RAMP D
STA 0+00 TO STA 1+29

*SEE SUPERELEVATION TABLE
** STA 283+65 TO STA 284+70

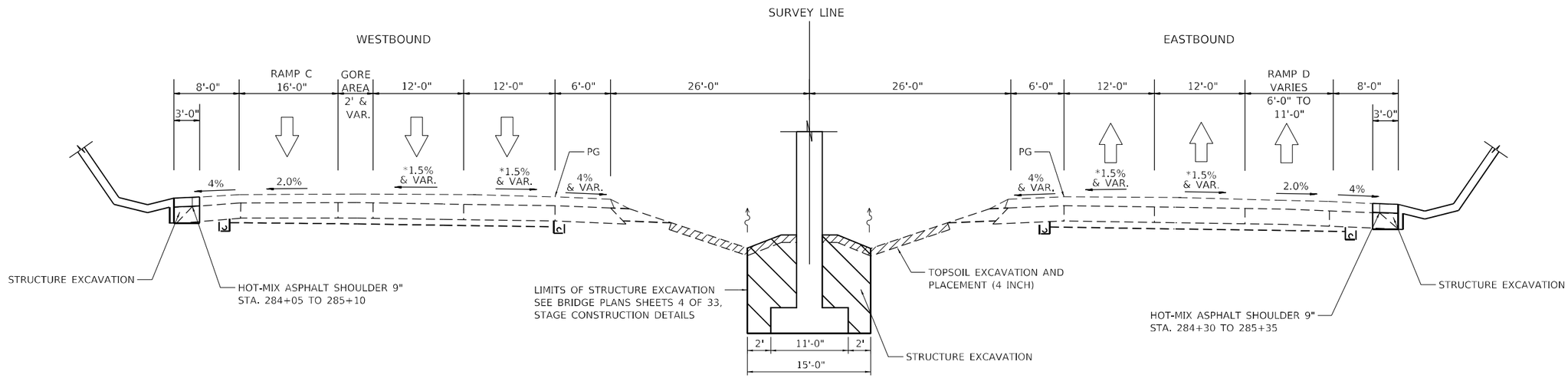

PROPOSED TYPICAL SECTION I–474

WESTBOUND AND EASTBOUND
STA 284+30 TO STA 285+11
RAMP C
STA 15+95 TO STA 16+88
RAMP D
STA 1+29 TO STA 2+20

CURVE NO.	SUPERELEVATION TRANSITION	P.C. STATION	P.T. STATION	P.I. STATION	RATE
1	STA 246+89.56 TO 249+81.79 / STA 282+05.29 TO 284+98.29	248+99.73 (BK) /248+98.96 (AH)	282+88.12	267+14.22	5.30%

MODEL: Default
FILE NAME: P:\Civil_IDOT_DIST4\PTB_194-035_var PH I-II 3120032\WO 10 Airport Road Phase 2 3120032-10\CAD Sheets\D1488886-int-typical-PB_474.dgn

The Upchurch Group
architects engineers surveyors
Professional Design Firm Corporation License No. 184-001001
123 North 15th Street
Mattoon, IL 61938
Phone: 217.235.3177
e-mail: upchurchgroup@upchurchgroup.com

USER NAME = Sta42	DESIGNED - MJS	REVISED -
TUG PROJECT NO. 3120032-10	DRAWN -	REVISED -
PLOT SCALE = 100.0000 ' / in.	CHECKED - MJS	REVISED -
PLOT DATE = 6/20/2023	DATE -	REVISED -

STATE OF ILLINOIS
DEPARTMENT OF TRANSPORTATION

PROPOSED TYPICAL SECTION – I–474
AIRPORT ROAD OVER I–474

SCALE: 100.0000 ' / in. SHEET OF SHEETS STA. TO STA.

F.A.I. RTE.	SECTION	COUNTY	TOTAL SHEETS	SHEET NO.
474	(72-3HB-4)BR	PEORIA	175	25
		CONTRACT NO. 68886		
	ILLINOIS	FED. AID PROJECT		

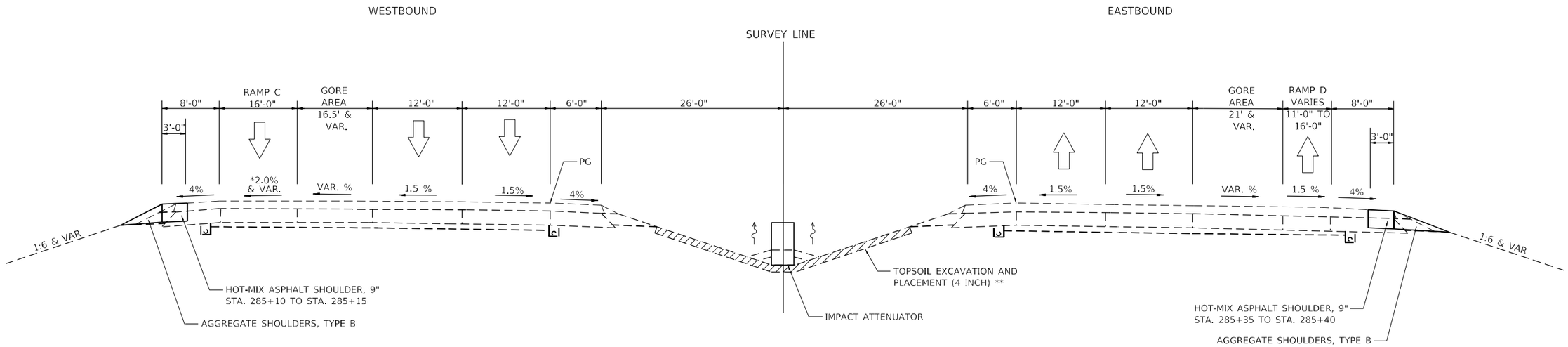

PROPOSED TYPICAL SECTION I–474

WESTBOUND AND EASTBOUND
STA 285+11 TO STA 289+47
RAMP C
STA 11+82 TO STA 15+95
RAMP D
STA 2+20 TO STA 6+75

*SEE SUPERELEVATION TABLE
** STA 285+20 TO STA 285+70

CURVE NO.	SUPERELEVATION TRANSITION	P.C. STATION	P.T. STATION	RATE
RAMP C CURVE 2	10+44.33	11+47.42	12+47.23	8.00%
RAMP D CURVE 1	6+62.4	7+62.98	8+62.4	8.00%

MODEL: Default
FILE NAME: P:\Civil_IDOT_DIST4\PTB_194-035_var PH I,II 3120032\WO 10 Airport Road Phase 2 3120032-10\CAD Sheets\D1488886-sht-typical-PB_474.dgn

The Upchurch Group
architects engineers surveyors
Professional Design Firm Corporation License No. 184-001001
123 North 15th Street
Mattoon, IL 61938
Phone: 217.235.3177
e-mail: upchurchgroup@upchurchgroup.com

USER NAME = Sta42	DESIGNED - MJS	REVISED -
TUG PROJECT NO. 3120032-10	DRAWN -	REVISED -
PLOT SCALE = 100.0000 ' / in.	CHECKED - MJS	REVISED -
PLOT DATE = 6/20/2023	DATE -	REVISED -

STATE OF ILLINOIS
DEPARTMENT OF TRANSPORTATION

PROPOSED TYPICAL SECTION – I–474
AIRPORT ROAD OVER I–474

SCALE: 100.0000 ' / in. SHEET OF SHEETS STA. TO STA.

F.A.I. RTE.	SECTION	COUNTY	TOTAL SHEETS	SHEET NO.
474	(72-3HB-4)BR	PEORIA	175	26
		CONTRACT NO. 68886		
	ILLINOIS	FED. AID PROJECT		

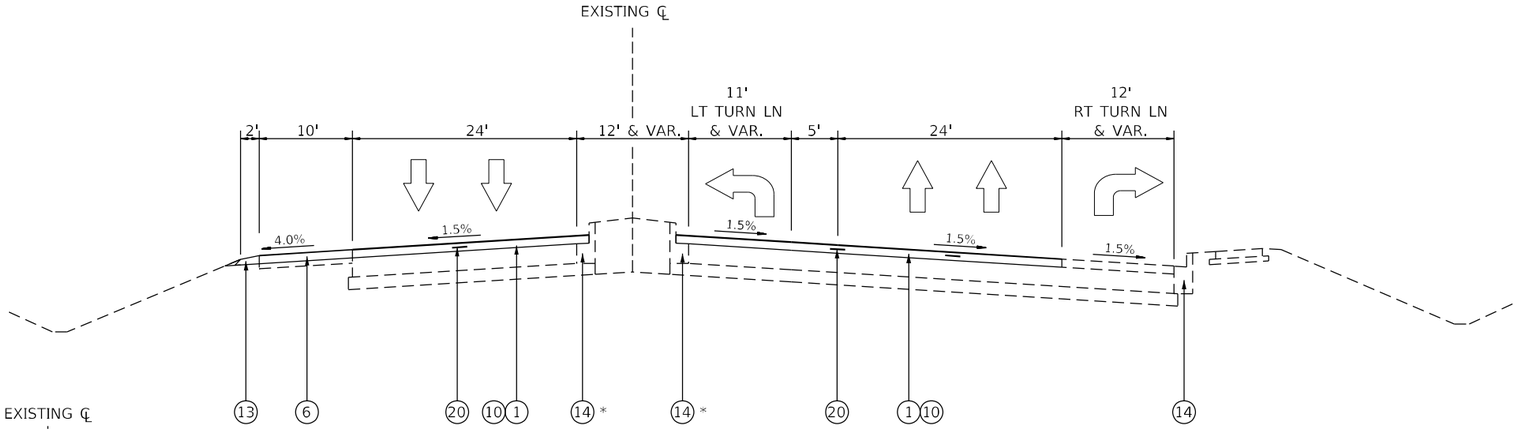

* OVERLAY EXISTING GUTTER

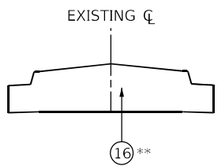

MEDIAN DETAIL
STA: 186+50 TO STA: 189+00

PROPOSED TYPICAL SECTION AIRPORT ROAD

STA 184+37 TO STA 185+85

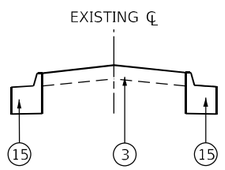

MEDIAN DETAIL
STA: 189+00 TO STA: 190+00

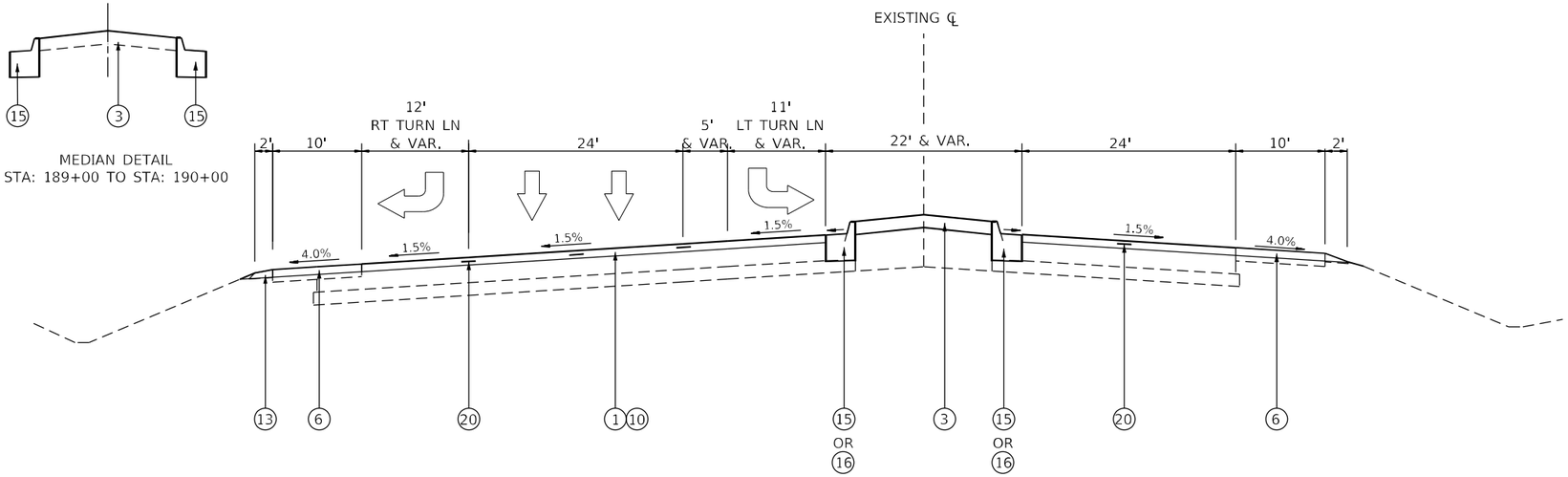

PROPOSED TYPICAL SECTION AIRPORT ROAD

STA 185+85 TO STA 190+00

LEGEND

1. PROPOSED HMA SURFACE COURSE, 1 1/2"
2. PROPOSED HMA BINDER COURSE, VARIABLE DEPTH
3. PROPOSED TURF MEDIAN W/ TOPSOIL (6" MIN.)
4. PROPOSED CURB AND GUTTER, TYPE B-6.24
5. PROPOSED AGGREGATE BASE COURSE, TYPE B
6. PROPOSED HMA SHOULDER, 1 1/2"
7. PROPOSED GUARDRAIL
8. PROPOSED GUARDRAIL AGGREGATE EROSION CONTROL, 9"
9. PROPOSED TEMPORARY PAVEMENT
10. PROPOSED HMA SURFACE REMOVAL, 1 1/2"
11. PROPOSED HMA SURFACE REMOVAL, 1 3/4"
12. PROPOSED HMA SURFACE COURSE, 1 3/4"
13. PROPOSED AGGREGATE SHOULDER-WEDGE
14. EXISTING CURB AND GUTTER
15. PROPOSED CURB AND GUTTER, TYPE M-4.24
16. PROPOSED PCC MEDIAN, TYPE SM-4.24
17. PROPOSED HMA SURFACE REMOVAL - BUTT JOINT
18. PROPOSED HMA SHOULDER, 1 3/4"
19. TOPSOIL FURNISH AND PLACE, VARIABLE DEPTH (4" MIN.)
20. LONGITUDINAL JOINT SEALANT

NOTES

1. PROPOSED HMA SURFACE REMOVAL, 1 1/2", HMA SURFACE COURSE 1 1/2", AND HMA SHOULDER 1 1/2" STA 184+37 TO STA 190+00

2. THE UNCONFINED EDGES OF THE POLYMERIZED HMA SURFACE COURSE AND TOP LIFT OF POLYMERIZED HMA BINDER COURSE SHALL BE PLACED AND TRIMMED IN ACCORDANCE WITH SPECIAL PROVISION "HOT-MIX ASPHALT JOINT TRIMMING." THE REMOVAL OF THE 6" EXTRA WIDTH AT THE LANE LINE WILL BE PAID FOR "HOT-MIX ASPHALT SURFACE REMOVAL - SPECIAL."

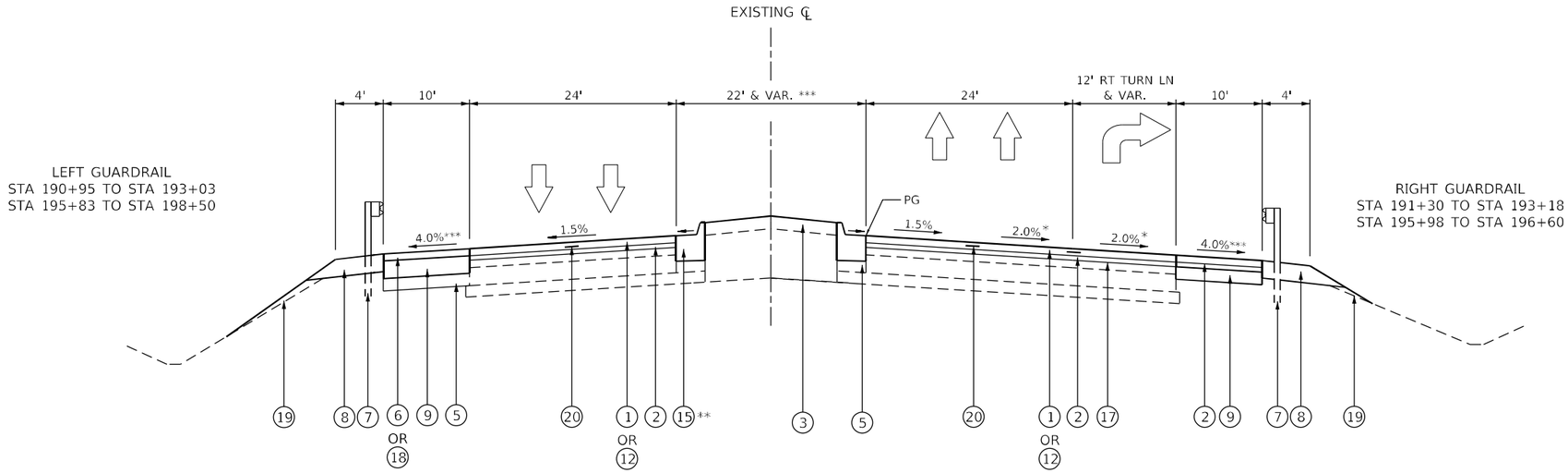

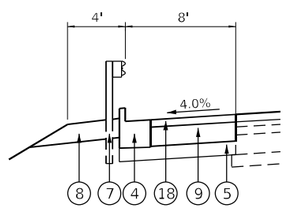

LEFT SHOULDER DETAIL

STA 195+98.36 TO STA 198+50

PROPOSED TYPICAL SECTION AIRPORT ROAD

STA 190+00 TO STA 192+73.36
STA 196+27.72 TO STA 198+50

* CROSSFALL VARIES FROM 2.0% AT END OF BRIDGE PAVEMENT CONNECTOR TO 1.5% AT LIMITS OF BINDER COURSE

** 10' LONG TRANSITION FROM B-6 CURB PROFILE AT END OF BRIDGE PAVEMENT CONNECTORS TO M-4.24 CURB AND GUTTER

*** TRANSITION 4% SHOULDER CROSSFALL ON THE ROAD TO 2% SHOULDER CROSSFALL ON THE BRIDGE APPROACH SLAB OVER THE LENGTH OF THE BRIDGE APPROACH PAVEMENT CONNECTORS

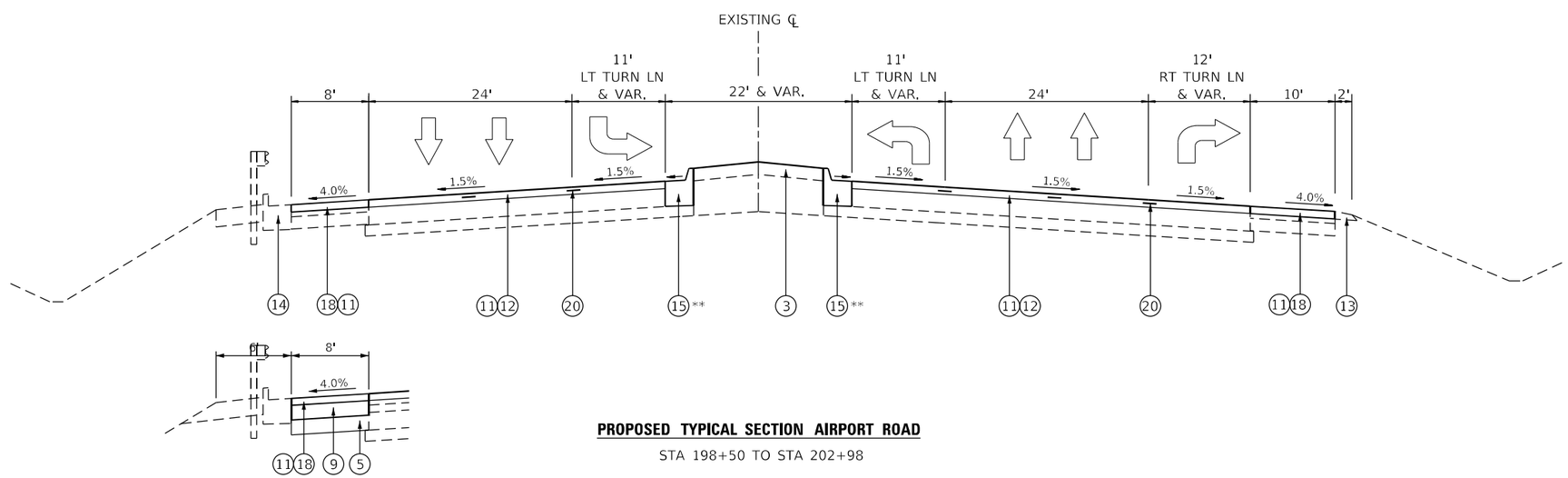

LEFT SHOULDER DETAIL

STA 198+50 TO STA 199+35

PROPOSED TYPICAL SECTION AIRPORT ROAD

STA 198+50 TO STA 202+98

LEGEND

1. PROPOSED HMA SURFACE COURSE, 1 1/2"
2. PROPOSED HMA BINDER COURSE, VARIABLE DEPTH
3. PROPOSED TURF MEDIAN W/ TOPSOIL (6" MIN.)
4. PROPOSED CURB AND GUTTER, TYPE B-6.24
5. PROPOSED AGGREGATE BASE COURSE, TYPE B
6. PROPOSED HMA SHOULDER, 1 1/2"
7. PROPOSED GUARDRAIL
8. PROPOSED GUARDRAIL AGGREGATE EROSION CONTROL, 9"
9. PROPOSED TEMPORARY PAVEMENT
10. PROPOSED HMA SURFACE REMOVAL, 1 1/2"
11. PROPOSED HMA SURFACE REMOVAL, 1 3/4"
12. PROPOSED HMA SURFACE COURSE, 1 3/4"
13. PROPOSED AGGREGATE SHOULDER-WEDGE
14. EXISTING CURB AND GUTTER
15. PROPOSED CURB AND GUTTER, TYPE M-4.24
16. PROPOSED PCC MEDIAN, TYPE SM-4.24
17. PROPOSED HMA SURFACE REMOVAL - BUTT JOINT
18. PROPOSED HMA SHOULDER, 1 3/4"
19. TOPSOIL FURNISH AND PLACE, VARIABLE DEPTH (4" MIN.)
20. LONGITUDINAL JOINT SEALANT

NOTES

1. PROPOSED TEMPORARY PAVEMENT RT SHOULDER STA 188+40 TO STA 193+26 AND STA 195+74 TO STA 197+60 (PRE-STAGE)
2. PROPOSED TEMPORARY PAVEMENT LT SHOULDER STA 189+75 TO STA 192+73.36 AND STA 196+27.72 TO STA 199+35 (STAGE 1)
3. PROPOSED HMA SURFACE REMOVAL 1 1/2", HMA SURFACE COURSE 1 1/2", AND HMA SHOULDER 1 1/2" STA 190+00 TO STA 192+73.36 (FINAL STAGE)
4. PROPOSED HMA SURFACE REMOVAL 1 3/4", HMA SURFACE COURSE 1 3/4", AND HMA SHOULDER 1 3/4" STA 196+27.72 TO STA 202+98 (FINAL STAGE)
5. THE UNCONFINED EDGES OF THE POLMERIZED HMA SURFACE COURSE AND TOP LIFT OF POLYMERIZED HMA BINDER COURSE SHALL BE PLACED AND TRIMMED IN ACCORDANCE WITH SPECIAL PROVISION "HOT-MIX ASPHALT JOINT TRIMMING." THE REMOVAL OF THE 6" EXTRA WIDTH AT THE LANE LINE WILL BE PAID FOR "HOT-MIX ASPHALT SURFACE REMOVAL - SPECIAL."

The Upchurch Group
architects engineers surveyors
Professional Design Firm Corporation License No. 184-001501
123 North 15th Street Mattoon, IL 61938 Phone: 217.235.3177 e-mail: upchurchgroup@upchurchgroup.com

USER NAME = Sta42	DESIGNED - MJS	REVISED -
TUG PROJECT NO. 3120032-10	DRAWN -	REVISED -
PLOT SCALE = 100.0000 ' / in.	CHECKED - MJS	REVISED -
PLOT DATE = 6/20/2023	DATE -	REVISED -

STATE OF ILLINOIS
DEPARTMENT OF TRANSPORTATION

PROPOSED TYPICAL SECTION – AIRPORT ROAD
AIRPORT ROAD OVER I-474

SCALE: 100.0000 ' / in. SHEET OF SHEETS STA. TO STA.

F.A.I. RTE.	SECTION	COUNTY	TOTAL SHEETS	SHEET NO.
474	(72-3HB-4)BR	PEORIA	175	28
		CONTRACT NO. 68886		
	ILLINOIS	FED. AID PROJECT		

CURB AND GUTTER REMOVAL SCHEDULE

LOCATION	STATION TO STATION		LT/RT	44000300 CURB REMOVAL	44000500 COMBINATION CURB AND GUTTER REMOVAL
				FOOT	FOOT
AIRPORT RD	186+50.00	186+56.52	LT	10.0	
AIRPORT RD	188+00	198+18.57	LT		519.4
AIRPORT RD	188+00	198+22.10	RT		522.4
AIRPORT RD	195+78.65	200+19.01	LT		539.9
AIRPORT RD	195+78.93	198+50.00	LT		271.1
AIRPORT RD	195+81.31	200+19.01	RT		537.7
			TOTALS	10.0	2,390.5
			ROUNDED TOTALS	10	2,391

BUTT JOINT REMOVAL SCHEDULE

LOCATION	STATION TO STATION		LT/RT	40600982 HOT - MIX ASPHALT SURFACE REMOVAL BUTT JOINT	40600990 TEMPORARY RAMP
				SQ YD	SQ YD
AIRPORT RD	184+37.00	184+47.00	RT	44.5	44.5
AIRPORT RD	184+37.00	184+47.00	LT	27.6	27.6
AIRPORT RD	189+75.00	189+85.00	LT	11.1	11.1
AIRPORT RD	189+89	189+99	LT	29.2	29.2
AIRPORT RD	190+00.00	191+88.00	LT	464.2	
AIRPORT RD	190+00.00	191+88.00	RT	693.4	
AIRPORT RD	190+01	190+11	LT	27.7	27.7
AIRPORT RD	196+27.72	198+52.00	LT	597.3	
AIRPORT RD	196+27.72	198+52.00	RT	1000.5	
AIRPORT RD	200+00.00	200+10.00	RT	25.9	25.9
AIRPORT RD	202+88.00	202+98.00	RT	27.6	27.6
AIRPORT RD	202+88.00	202+98.00	LT	48.7	48.7
DIRKSEN PKWY	145+23.00	145+33.00	LT	29.6	29.6
DIRKSEN PKWY	145+23.00	145+33.00	RT	36.1	36.1
			TOTALS	3063.4	308.0
			ROUNDED TOTALS	3064	308

HMA SURFACE COURSE REMOVAL SCHEDULE

LOCATION	STATION TO STATION		LT / RT	LENGTH	WIDTH	44000155 HOT-MIX ASPHALT SURFACE REMOVAL, 1-1/2"	44000156 HOT-MIX ASPHALT SURFACE REMOVAL, 1-3/4"
				FOOT	FOOT	SQ YD	SQ YD
AIRPORT RD	184+37	190+00	LT / RT	563	VAR	6044.7	
AIRPORT RD	198+52	202+98	LT / RT	446	VAR		3450.9
					TOTALS	6,044.7	3,450.9
					ROUNDED TOTALS	6,045	3,451

REMOVAL SCHEDULE

LOCATION	STATION TO STATION		LT / RT	44000100 PAVEMENT REMOVAL	44003100 MEDIAN REMOVAL	44004250 PAVED SHOULDER REMOVAL	63200310 GUARDRAIL REMOVAL	X4400110 TEMPORARY PAVEMENT REMOVAL	Z0004552 APPROACH SLAB REMOVAL
				SQ YD	SQ FT	SQ YD	FOOT	SQ YD	SQ YD
AIRPORT RD	192+73.37	193+18.59	LT	115.4					
AIRPORT RD	192+73.37	193+25.89	RT	135.5					
AIRPORT RD	195+74.74	196+27.68	LT	135.6					
AIRPORT RD	195+82.05	196+27.68	RT	117.8					
AIRPORT RD	186+52.94	189+00.34	RT		1470.1				
AIRPORT RD	189+75.00	193+14.89	LT			348.2			
AIRPORT RD	188+50	193+27.11	RT			522.6			
AIRPORT RD	195+73.15	199+35.00	LT			308.2			
AIRPORT RD	195+85.75	197+60.00	RT			193.8			
AIRPORT RD	190+81.5	193+07.8	LT				226.3		
AIRPORT RD	191+28.8	193+21.8	RT				193.0		
AIRPORT RD	195+78.8	198+58.35	LT				279.6		
AIRPORT RD	201+18.84	201+26.14	RT		65.1				
FAI 474	284+36.38	288+64.69	LT				428.3		
FAI 474	284+25	285+40	LT			38.3			
FAI 474	284+00	285+15	RT			38.4			
AIRPORT RD	188+00	191+40	LT/RT					575.0	
AIRPORT RD	197+25	200+20	LT/RT					725.0	
AIRPORT RD	193+13.44	193+61.19	LT/RT						331.9
AIRPORT RD	195+34.69	195+87.38	LT/RT						378.7
			TOTALS	504.3	1535.2	1449.5	1127.2	1300.0	710.7
			ROUNDED TOTALS	505	1536	1450	1128	1300	711

RIPRAP SCHEDULE

LOCATION	STATION TO STATION		LT/RT	WIDTH	LENGTH	28100107 STONE RIPRAP, CLASS A4	28100805 STONE DUMPED RIPRAP, CLASS A3	28200200 FILTER FABRIC
				FOOT	FOOT	SQ YD	TON	SQ YD
AIRPORT RD	196+00.00	198+71.47	LT	VAR	VAR	346.5		346.5
AIRPORT RD	196+09.92	196+17.89	RT	8	27	28.7		28.7
AIRPORT RD	199+53.11	199+61.11	LT	8	100		121.5	88.9
AIRPORT RD	199+89.29	200+13.79	LT	15	20		45.6	53.3
AIRPORT RD	201+02.11	200+12.11	LT	10	50		75.9	88.9
					TOTALS	375.2	243.0	606.3
					ROUNDED TOTALS	376	243	607

TREE REMOVAL SCHEDULE

LOCATION	STATION TO STATION		LT/RT	20100110 TREE REMOVAL (6 TO 15 UNITS DIAMETER)	20100210 TREE REMOVAL (OVER 15 UNITS DIAMTER)	20100500 TREE REMOVAL, ACRES
				UNIT	UNIT	ACRE
AIRPORT RD	190+50	199+00	LT	18		
AIRPORT RD	190+50	199+00	LT		20	
AIRPORT RD	190+39.83	193+49.09	LT			0.25
AIRPORT RD	195+64.99	199+00.00	LT			0.90
			TOTAL	18	20	1.15
			ROUNDED TOTALS	18	20	1.25

TEMPORARY CONCRETE BARRIER SCHEDULE

LOCATION	STATION	TO STATION	LT / RT	70400100 TEMPORARY CONCRETE BARRIER	70400200 RELOCATE TEMPORARY CONCRETE BARRIER	70600260 IMPACT ATTENUATORS, TEMPORARY (FULLY REDIRECTIVE, NARROW), TL3	70600280 IMPACT ATTENUATORS, TEMPORARY (SEVERE USE, NARROW), TL3	70600332 IMPACT ATTENUATORS, RELOCATE (FULLY REDIRECTIVE, NARROW), TL3
				FOOT	FOOT	EACH	EACH	EACH
AIRPORT RD	189+03		LT					
AIRPORT RD	189+03	199+96.5	LT	1100.0		1		
AIRPORT RD		199+65						
AIRPORT RD	188+79		RT					
AIRPORT RD	188+79	199+20	RT		1050.0			1
AIRPORT RD		199+20						
FAI 474	281+40		RT					
FAI 474	281+40	286+27.5	RT	487.5	1950.0		2	
FAI 474	281+65		RT					
FAI 474	281+65	285+65	RT	400.0				
FAI 474	283+15	287+77.5	LT	462.5	1850.0		2	
FAI 474		287+77.5	LT					
FAI 474	283+20	287+20	LT	400.0				
FAI 474		287+20	LT					
			TOTALS	2850.0	4850.0	1	4	1
			ROUNDED TOTALS	2850	4850	1	4	1

TEMPORARY EROSION CONTROL SCHEDULE

LOCATION	STATION	TO STATION	LT / RT	25000750 MOWING	280000250 TEMPORARY EROSION CONTROL SEEDING	28000305 TEMPORARY DITCH CHECKS	28000400 PERIMETER EROSION BARRIER	28000500 INLET AND PIPE PROTECTION
				ACRE	POUND	FOOT	FOOT	EACH
AIRPORT RD	184+37.00	202+98.00	LT / RT			90		3
AIRPORT RD	186+62.31	187+36.57	LT				77.9	
AIRPORT RD	189+95.00	190+25.84	LT				32.9	
AIRPORT RD	190+34.29	193+68.02	LT				334.2	
AIRPORT RD	195+16.60	198+58.79	LT				368.9	
AIRPORT RD	201+75.50	202+67.20	LT				94.3	
AIRPORT RD	190+00.00	193+76.8	RT				384.9	
AIRPORT RD	195+49.66	198+49.84	RT				328.4	
FAI 474	283+00.00	286+00.00	LT / RT	0.25	22.0	20	102.7	1
			TOTALS	0.25	22.0	110	1724.2	3
			ROUNDED TOTALS	0.25	22	110	1725	3

EXCAVATION BALANCE SCHEDULE

DESCRIPTION	20200100 EARTH EXCAVATION (CUT)	50200100 STRUCTURE EXCAVATION	EARTH EXCAVATION ADJUSTED SHRINKAGE 25% EARTH	EMBANKMENT (FILL)	EARTHWORK BALANCE WASTE (+) OR SHORTAGE (-)	20400800 FURNISHED EXCAVATION
	CU YD	CU YD	CU YD	CU YD	CU YD	CU YD
PRE-STAGING	488.5		366	0.0	366.4	
STAGE 1	342.3		257	1895.0	-1638.3	
STAGE 2	15.1		11	28.3	-17.0	
FINAL STAGE	168.4		126	252.8	-126.5	
BRIDGE EXCAVATION		1345	1009		1008.8	
TOTALS	1014.3	1345.0	1769.5	2176.1	-406.6	528.9
ROUNDED TOTALS	1015	1345				530

1. FURNISHED EXCAVATION = EMBANKMENT - (EXCAVATIONS X 0.75)
2. EARTH EXCAVATION DOES NOT INCLUDE THE CU YDS FROM TOPSOIL EXCAVATION AND PLACEMENT
3. FURNISH EXCAVATION DOES NOT INCLUDE CU YDS REQUIRED FOR TOPSOIL FURNISH AND PLACE, VARIABLE DEPTH

PERMANENT EROSION CONTROL SCHEDULE

LOCATION	STATION	TO STATION	LT / RT	21101600 TOPSOIL FURNISH AND PLACE, VARIABLE DEPTH	25000200 SEEDING, CLASS 2	25000305 SEEDING, CLASS 3A	25000400 NITROGEN FERTILIZER NUTRIENT	25000500 PHOSPHORUS FERTILIZER NUTRIENT	25000600 POTASSIUM FERTILIZER NUTRIENT	25100115 MULCH METHOD 2	25100630 EROSION CONTROL BLANKET
				SQ YD	ACRE	ACRE	POUND	POUND	POUND	ACRE	SQ YD
AIRPORT RD	184+37.00	194+48.04	LT	1436.7	0.13	0.17	27.0	27.0	27.0	0.30	1436.7
AIRPORT RD	184+37.00	194+48.04	RT	477.7		0.10	9.0	9.0	9.0	0.10	477.7
AIRPORT RD	194+48.04	202+98.00	LT	4084.7	0.19	0.66	76.5	76.5	76.5	0.85	4084.7
AIRPORT RD	194+48.04	202+98.00	RT	338.9		0.07	6.3	6.3	6.3	0.07	338.9
FAI 474	283+00	286+00	LT/RT			0.18	16.2	16.2	16.2	0.18	846.2
			TOTALS	6338.0	0.32	1.2	135.0	135.0	135.0	1.50	7184.2
			ROUNDED TOTALS	6338	0.50	1.25	135	135	135	1.75	7185

TOPSOIL BALANCE SCHEDULE

LOCATION	STATION	TO STATION	OFFSET	21101505 TOPSOIL EXCAVATION AND PLACEMENT	TOPSOIL PLACEMENT ADJUSTED SHRINKAGE 25% EARTH	TOPSOIL BALANCE WASTE (+) OR SHORTAGE (-)
				CU YD	CU YD	CU YD
FAI 474	283+64.91	285+70	LT/RT	118.6	89.0	29.7
			TOTALS	118.6	89.0	29.7
			ROUNDED TOTALS	120	90	30

1. TOPSOIL PLACEMENT = TOPSOIL EXCAVATION X 0.75
2. TOPSOIL FURNISH AND PLACEMENT, VARIABLE DEPTH IS ASSUMED TO BE 6 INCH IN DEPTH

PAVEMENT SCHEDULE

LOCATION	STATION	TO STATION	LT / RT	LENGTH	35101400 AGGREGATE BASE COURSE, TYPE B	40600275 BITUMINOUS MATERIALS (PRIME COAT)	40600295 POLYMERIZED BITUMINOUS MATERIALS (TACK COAT)	40600370 LONGITUDINAL JOINT SEALANT	40603080 HOT-MIX ASPHALT BINDER COURSE, IL-19.0, N50	40603205 POLYMERIZED HMA BINDER COURSE, IL-9.5, N50	40604160 POLYMERIZED HMA SURFACE COURSE, IL-9.5, MIX "D", N50	48203003 HMA SHOULDERS, 1 ½"	48203004 HMA SHOULDERS, 1 3/4"	48203033 HMA SHOULDERS, 9"	X4400196 HMA SURFACE REMOVAL, SPECIAL	Z0034105 MATERIAL TRANSFER DEVICE	Z0062456 TEMPORARY PAVEMENT
				FOOT	TON	POUND	POUND	FOOT	TON	TON	TON	SQ YD	SQ YD	SQ YD	SQ YD	TON	SQ YD
PRESTAGE	188+00	191+50	LT / RT	350													574.9
PRESTAGE	197+25	200+20	LT / RT	295													725.5
AIRPORT RD	184+37	190+00	LT	563		63.3	5773.2	1008			320.2	340.8			89.0	320.2	28.1
AIRPORT RD	184+37	190+00	RT	563		392.6	3155.6	756			159.5	305.0			37.5	159.5	180.1
AIRPORT RD	190+00	192+73.36	LT	273.36	180	692.3	2030.8	274	120.7	65.9	63.3	303.8			27.2	249.9	307.7
AIRPORT RD	190+00	192+73.36	RT	273.36	46	692.3	2249.5	274	120.7	92.8	89.0				27.2	302.5	307.7
AIRPORT RD	192+73.36	193+27	RT	53.64		135.8											60.4
AIRPORT RD	195+74	197+60	RT	186.00		443.2											197.0
AIRPORT RD	196+27.72	198+50	LT	222.28	243	445.9	1526.9	222	201.8	51.0	60.2		198.2		21.6	313.0	197.6
AIRPORT RD	196+27.72	198+50	RT	222.28	80		1471.8	572	210.1	80.0	98.1				21.6	388.2	
AIRPORT RD	198+50	202+98	LT	448			2638.4	448			142.7		397.6		30.9	142.7	75.6
AIRPORT RD	198+50	202+98	RT	448			2488.9	448			161.8		165.9		44.4	161.8	
FAI 474	284+25	285+40	LT	115										38.3			
FAI 474	284+00	285+15	RT	115										38.4			
				TOTALS	**549**	**2865.4**	**21335.1**	**4002**	**653.3**	**289.7**	**1094.8**	**949.6**	**761.7**	**76.7**	**299.4**	**2037.8**	**2654.6**
				ROUNDED TOTALS	**549**	**2866**	**21335**	**4002**	**654**	**290**	**1095**	**950**	**762**	**77**	**300**	**1650**	**2655**

CURB AND GUTTER & MEDIAN SCHEDULE

LOCATION	STATION	TO STATION	LT/RT	60605000 COMBINATION CONCRETE CURB AND GUTTER, TYPE B-6.24	60608582 COMBINATION CONCRETE CURB AND GUTTER, TYPE M-4.24	60618300 CONCRETE MEDIAN SURFACE, 4 INCH	60622320 CONCRETE MEDIAN, TYPE SM-4.24
				FOOT	FOOT	SQ FT	SQ FT
AIRPORT RD	195+98.36	198+50.00	LT	251.6			
AIRPORT RD	189+00.00	193+24.21	LT		424.6		
AIRPORT RD	189+00.00	193+27.31	RT		427.3		
AIRPORT RD	195+74.19	201+19.02	LT		547.1		
AIRPORT RD	195+76.87	201+19.02	RT		542.2		
AIRPORT RD	201+19.02	201+26.00	LT/RT			67.7	
AIRPORT RD	186+47.30	189+00	LT/RT				1887.1
			TOTALS	**251.6**	**1941.2**	**67.7**	**1887.1**
			ROUNDED TOTALS	**252**	**1942**	**68**	**1888**

AGGREGATE SURFACE COURSE, TYPE B SCHEDULE

LOCATION	STATION	LT/RT	AREA	DEPTH	40200900 AGGREGATE SURFACE COURSE, TYPE B
			SQ FT	INCH	CU YD
AIRPORT RD	190+32	LT	280	6.0	5.2
				TOTAL	**5.2**
				ROUNDED TOTAL	**6**

SIDEWALK SCHEDULE

LOCATION	STATION	TO STATION	LT/RT	42400100 PCC SIDEWALK, 4"
				SQ FT
AIRPORT RD	186+52.94	187+36.57	LT	395.2
			TOTAL	**395.2**
			ROUNDED TOTAL	**396**

AGGREGATE SHOULDERS,TYPE B SCHEDULE

LOCATION	STATION	TO STATION	LT/RT	AREA	WEDGE DEPTH	48101200 AGGREGATE SHOULDERS, TYPE B
				SQ FT	INCH	TON
AIRPORT RD	190+00.00	190+17.59	LT	75.4	9.0	2.1
AIRPORT RD	190+45.59	193+16.73	LT	1054.6	10.0	33.4
AIRPORT RD	195+68.73	198+50.00	LT	819.5	9.0	23.3
AIRPORT RD	191+18.75	193+32.36	RT	943.3	9.0	26.9
AIRPORT RD	195+84.36	198+50	RT	621.2	9.0	17.7
FAI 474	284+26.58	184+31.58	LT	53.7	9.0	1.5
FAI 474	285+41.04	288+66.69	LT	1567.4	9.0	44.6
FAI 474	284+02.28	284+07.28	RT	53.7	9.0	1.5
FAI 474	285+10.54	285+15.54	RT	44.3	9.0	1.3
					TOTAL	**152.3**
					ROUNDED TOTAL	**153**

GUARDRAIL SCHEDULE

LOCATION	STATION TO STATION		LT / RT	63000001 STEEL PLATE BEAM GUARDRAIL, TYPE A, 6 FT POSTS	63100085 TRAFFIC BARRIER TERMINAL, TYPE 6	63100167 TRAFFIC BARRIER TERMINAL, TYPE 1, SPECIAL (TANGENT)	72501000 TERMINAL MARKERS - DIRECT APPLIED	78200005 GUARDRAIL REFLECTORS, TYPE A	Z0001002 GUARDRAIL AGGREGATE EROSION CONTROL
				FOOT	EACH	EACH	EACH	EACH	TON
AIRPORT RD	190+78.38	191+28.38	LT			1	1		
AIRPORT RD	191+28.38	192+65.88	LT	137.5				5	56.1
AIRPORT RD	192+65.88	193+03.38	LT		1				
AIRPORT RD	195+83.35	196+20.85	LT		1				
AIRPORT RD	196+20.85	198+58.35	LT	237.5				6	68.4
AIRPORT RD	191+30.23	191+80.23	RT			1	1		
AIRPORT RD	191+80.23	192+80.23	RT	100.0				4	46.7
AIRPORT RD	192+80.23	193+17.73	RT		1				
AIRPORT RD	195+97.71	196+35.21	RT		1			4	21.8
AIRPORT RD	196+35.21	196+85.21	RT			1	1		
			TOTALS	475.0	4	3	3	19	193.0
			ROUNDED TOTALS	475	4	3	3	19	193

WOVEN WIRE FENCE SCHEDULE

LOCATION	STATION TO STATION		LT/RT	66500105 WOVEN WIRE FENCE, 4'	Z0022800 FENCE REMOVAL
				FOOT	FOOT
AIRPORT RD	192+50	193+10	LT	60.0	60.0
AIRPORT RD	195+75	197+00	LT	160.0	160.0
			TOTALS	220.0	220.0
			ROUNDED TOTALS	220	220

DRAINAGE STRUCTURE SCHEDULE

LOCATION	STATION	LT / RT	54210182 PIPE ELBOW 12"	54262712 METAL FLARED END SECTIONS 12"	60100060 CONCRETE HEADWALLS FOR PIPE DRAINS	60106500 PIPE DRAINS, BITUMINOUS COATED CORRUGATED STEEL 12"	61000050 CONCRETE THRUST BLOCKS	X6010003 PIPE DRAIN REMOVAL	X6020082 INLETS, TYPE G-1	Z0064540 SEEPAGE COLLAR
			EACH	EACH	EACH	FOOT	EACH	FOOT	EACH	EACH
AIRPORT RD	197+75	LT	2	1		89.1	1		1	1
AIRPORT RD	200+00	LT	2	1		102.6	1		1	1
AIRPORT RD	202+25	LT	2	1		53.2	1	59.0	1	1
AIRPORT RD - BRIDGE					4					
		TOTALS	6	3	4	244.9	3	59.0	3	3
		ROUNDED TOTALS	6	3	4	245	3	59	3	3

IMPACT ATTENUATOR SCHEDULE

LOCATION	STATION TO STATION		LT/RT	64300260 IMPACT ATTENUATORS (FULLY REDIRECTIVE, NARROW), TEST LEVEL 3	64300920 IMPACT ATTENUATORS (SEVERE USE, WIDE), TEST LEVEL 3	64301090 ATTENUATOR BASE	X1700035 CLASS SI CONCRETE	X6431120 REMOVE IMPACT ATTENUATOR SAND MODULE
				EACH	EACH	SQ YD	CU YD	EACH
AIRPORT RD	191+20.68	191+81.95	CL	2			31.6	
FAI 474	283+82.00	284+23.72	RT					1
FAI 474	285+17.72	285+57.00	LT					1
FAI 474	284+00.72	284+23.72	CL		1	12.8		
FAI 474	285+17.72	285+40.72	CL		1	12.8		
			TOTALS	2	2	25.6	31.6	2
			ROUNDED TOTALS	2	2	26	32	2

The Upchurch Group
architects engineers surveyors
Professional Design Firm Corporation License No. 184-003401
123 North 15th Street Mattoon, IL 61938 Phone: 217.235.3177
e-mail: upchurchgroup@upchurchgroup.com

USER NAME = Sta42 | DESIGNED - MJS | REVISED -
TUG PROJECT NO. 3120032-10 | DRAWN - | REVISED -
PLOT SCALE = 2.0000 ' / in. | CHECKED - MJS | REVISED -
PLOT DATE = 6/21/2023 | DATE - | REVISED -

STATE OF ILLINOIS
DEPARTMENT OF TRANSPORTATION

SCHEDULE OF QUANTITIES
AIRPORT ROAD OVER I-474

SCALE: 2.0000 ' / in. | SHEET 4 OF 6 SHEETS | STA. TO STA.

F.A.I. RTE.	SECTION	COUNTY	TOTAL SHEETS	SHEET NO.
474	(72-3HB-4)BR	PEORIA	175	32

CONTRACT NO. 68886
ILLINOIS | FED. AID PROJECT

TEMPORARY PAVEMENT MARKING SCHEDULE

STAGE	LOCATION	STATION TO STATION		LT/RT	70106700 *TEMPORARY RUMBLE STRIPS	70300100 *SHORT TERM PAVEMENT MARKING	70300150 *SHORT TERM PAVEMENT MARKING REMOVAL	78300200 RAISED REFLECTIVE PAVEMENT MARKER REMOVAL	Z0024475 TUBULAR MARKER
					EACH	FOOT	SQ FT	EACH	EACH
1	AIRPORT RD	174+00	213+00	LT/RT	4			16	23
2	AIRPORT RD	177+50	213+00	LT/RT	4			16	21
1 + 2	FAI 474	263+20	321+00	LT/RT					
POST STAGES	AIRPORT RD	184+37.00	202+98.00	LT/RT		11400.0	3800.0	60	
				TOTALS	**8**	**11400.0**	**3800.0**	**92**	**44**
				ROUNDED TOTALS	**8**	**11400**	**3800**	**92**	**44**

* QUANTITY FOR 2 APPLICATIONS

PAVEMENT CONNECTOR SCHEDULE

LOCATION	STATION TO STATION		LENGTH	WIDTH	42000060 WELDED WIRE REINFORCEMENT	42000080 PAVEMENT CONNECTOR (PCC) FOR BRIDGE APRROACH SLAB
					SQ YD	SQ YD
AIRPORT RD	192+73.37	192+95.55	22.18	90.0	221.8	221.8
AIRPORT RD	196+05.53	196+27.71	22.18	90.0	216.8	216.8
				TOTAL	**438.6**	**438.6**
				ROUNDED TOTAL	**439**	**439**

RAISED REFLECTIVE PAVEMENT MARKER SCHEDULE

LOCATION	STATION	STATION	78100100 RAISED REFLECTIVE PAVEMENT MARKER	78100200 TEMPORARY RAISED REFLECTIVE PAVEMENT MARKER	78100300 REPLACEMENT REFLECTOR	X7830050 RAISED PAVEMENT LANE MARKER, REFLECTOR REMOVAL
			EACH	EACH	EACH	EACH
AIRPORT RD (NO BRIDGE)	184+37	202+98	72	72		
AIRPORT RD (BRIDGE)	192+73.37	196+27.71		20		
FAI 474	263+20	321+00			20	20
		TOTALS	**72**	**92**	**20**	**20**

EXPANSION JOINT SCHEDULE

LOCATION	LT/RT	STATION	X0322194 POLYMER MODIFIED PORTLAND CEMENT MORTAR	Z0051200 REMOVING AND REPLACING EXPANSION JOINT
			SQ FT	FOOT
AIRPORT RD	LT	190+00	146.30	25.0
AIRPORT RD	RT	191+00	136.90	24.5
		TOTALS	**283.20**	**49.5**
		ROUNDED TOTALS	**284**	**50**

CURB REFLECTORS SCHEDULE

LOCATION	STATION TO STATION		78200020 CURB REFLECTORS
			EACH
AIRPORT RD	186+47.30	189+00.00	23
AIRPORT RD	192+73.37	196+27.71	18
AIRPORT RD	201+19.02	201+26.00	6
AIRPORT RD - STAGE 1	190+50	197+50	
AIRPORT RD - STAGE 2	190+50	197+50	
		TOTALS	**47**

PERMANENT PAVEMENT MARKING SCHEDULE - LETTERS & SYMBOLS

LOCATION	STATION	STATION	DETAIL	78009000 MODIFIED URETHANE PAVEMENT MARKING, LETTERS AND SYMBOLS	78011000 GROOVING FOR RECESSED PAVEMENT MARKING, LETTERS, NUMBERS AND SYMBOLS
				SQ FT	SQ FT
ARROWS					
AIRPORT RD	184+37	185+51.61	2 LT ARROWS	31.2	31.2
AIRPORT RD	186+22.28	187+91.45	3 LT ARROWS	46.8	46.8
AIRPORT RD	186+75.61	188+32	2 RT ARROWS	31.2	31.2
AIRPORT RD	198+42.06	200+00	2 RT ARROWS	31.2	31.2
AIRPORT RD	201+90.61	202+98	1 LT ARROW	15.6	15.6
DIRKSEN	145+60.05	145+66.01	1 LT ARROW	15.6	15.6
			TOTALS	171.6	171.6
			ROUNDED TOTALS	172	172

PERMANENT PAVEMENT MARKING SCHEDULE - LINE 6"

LOCATION	STATION	STATION	78009006 MODIFIED URETHANE PAVEMENT MARKING, LINE 6"	78011035 GROOVING FOR RECESSED PAVEMENT MARKING 7"
			FOOT	FOOT
WHITE SKIP-DASH				
AIRPORT RD	184+37	185+39.1	51.1	51.1
AIRPORT RD	186+29.1	202+98	834.5	834.5
		TOTALS	885.6	885.6
		ROUNDED TOTALS	886	886

PERMANENT PAVEMENT MARKING SCHEDULE - LINE 12"

LOCATION	STATION	STATION	DETAIL	78009012 MODIFIED URETHANE PAVEMENT MARKING, LINE 12"	78011065 GROOVING FOR RECESSED PAVEMENT MARKING 13"
				FOOT	FOOT
WHITE SOLID - DIAGONALS IN PAINTED ISLAND/MEDIAN					
AIRPORT RD	184+37	185+51.61	LT LANE	42.6	42.6
AIRPORT RD	186+22.28	187+91.45	LT LANE	47.8	47.8
DIRKSEN	145+73.73	146+21.15	RT	90.7	90.7
DIRKSEN	145+23.06	146+14.23	RT	12.1	12.1
DIRKSEN	145+42.83	146+21.15	LT	152.2	152.2
RAMP B	0+34.50	0+81.93	RT	86.3	86.3
RAMP D	26+60.18	27+18.74	RT	105.2	105.2
RAMP C	0+35.01	0+96.25	LT/RT	189.8	189.8
RAMP A	21+30.98	21+91.11	LT/RT	109.4	109.4
			TOTALS	836.1	836.1
			ROUNDED TOTALS	837	837

PERMANENT PAVEMENT MARKING SCHEDULE - LINE 4"

LOCATION	STATION	STATION	LT / RT	78009004 MODIFIED URETHANE PAVEMENT MARKING, LINE 4"	78011025 GROOVING FOR RECESSED PAVEMENT MARKING 5"
				FOOT	FOOT
YELLOW SOLID AROUND MEDIAN					
AIRPORT RD	184+37	185+05.06	LT	213.6	213.6
AIRPORT RD	186+32.37	201+26.50	LT / RT	2994.1	2994.1
AIRPORT RD	201+70.64	202+98	RT	260.1	260.1
DIRKSEN	145+23.19	145+93.90	LT	145.3	145.3
WHITE SOLID - EDGE OF PAVEMENT LINE					
AIRPORT RD	184+37	185+85.23	LT	168.8	168.8
AIRPORT RD	185+85.23	202+98	LT	1726.5	1726.5
AIRPORT RD	184+37	185+61.23	RT	124.2	124.2
AIRPORT RD	186+10.23	186+58.99	RT	48.8	48.8
AIRPORT RD	187+25.47	201+17.09	RT	1391.6	1391.6
AIRPORT RD	201+80.89	202+27.66	RT	46.8	46.8
			TOTALS	7119.8	7119.8
			ROUNDED TOTALS	7120	7120

PERMANENT PAVEMENT MARKING SCHEDULE - LINE 8"

LOCATION	STATION	STATION	LT / RT	78009008 MODIFIED URETHANE PAVEMENT MARKING, LINE 8"	78011045 GROOVING FOR RECESSED PAVEMENT MARKING 9"
				FOOT	FOOT
WHITE SOLID - TURN LANE					
AIRPORT RD	186+75.61	188+32	LT	156.4	156.4
AIRPORT RD	198+42.06	200+00	RT	157.9	157.9
AIRPORT RD	201+90.61	202+98	LT	107.4	107.4
WHITE SOLID - PAINTED ISLAND/TURN LANE EDGE					
AIRPORT RD	184+37	185+51.61	RT	232.1	232.1
AIRPORT RD	186+22.28	187+91.45	LT	340.8	340.8
DIRKSEN	145+73.73	146+21.15	RT	164.3	164.3
DIRKSEN	145+23.06	146+14.23	RT	185.3	185.3
DIRKSEN	145+42.83	146+21.15	LT	257.8	257.8
RAMP B	0+34.50	0+81.93	RT	125.6	125.6
RAMP D	26+60.18	27+18.74	RT	136.3	136.3
RAMP C	0+35.01	0+96.25	LT/RT	170.1	170.1
RAMP A	21+30.98	21+91.11	LT/RT	131.4	131.4
			TOTALS	2165.4	2165.4
			ROUNDED TOTALS	2166	2166

PERMANENT PAVEMENT MARKING SCHEDULE - LINE 24"

LOCATION	STATION	DETAIL	78009024 MODIFIED URETHANE PAVEMENT MARKING, LINE 24"	78011125 GROOVING FOR RECESSED PAVEMENT MARKING 25"
			FOOT	FOOT
WHITE SOLID - STOP BAR				
AIRPORT RD	185+39.06	LT LANE	12.5	12.5
AIRPORT RD	185+49.10	EB THRU	23.8	23.8
AIRPORT RD	186+24.83	WB THRU	24.1	24.1
AIRPORT RD	186+35.95	LT LANE	10.6	10.6
AIRPORT RD	201+90.61	LT LANE	12.0	12.0
DIRKSEN	145+91.05	LT LANE	12.2	12.2
DIRKSEN	146+12.00	SB THRU	12.5	12.5
		TOTALS	107.7	107.7
		ROUNDED TOTALS	108	108

EXIST. CURVE I474EXCL6B
PI STA. = 267+12.89
Δ = 50° 48' 17" (LT)
D = 1° 30' 00"
R = 3,819.72'
T = 1,813.93'
L = 3,386.98'
E = 408.83'
e = 5.30%
S.E. TRANS. = 282+05.29 TO 284+98.29
P.C. STA. = 248+98.96
P.T. STA. = 282+85.94

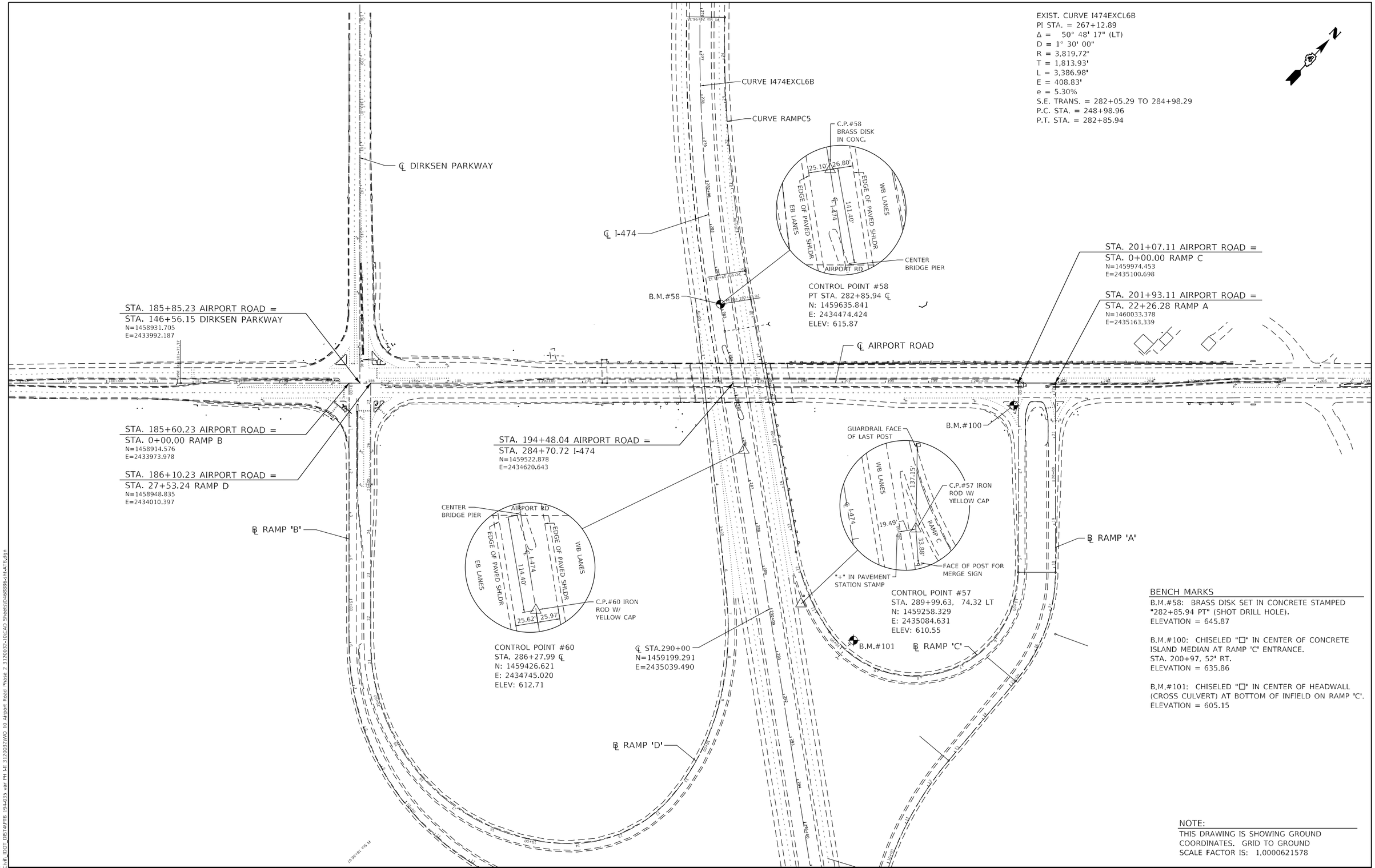

BENCH MARKS

B.M.#58: BRASS DISK SET IN CONCRETE STAMPED "282+85.94 PT" (SHOT DRILL HOLE).
ELEVATION = 645.87

B.M.#100: CHISELED "□" IN CENTER OF CONCRETE ISLAND MEDIAN AT RAMP 'C' ENTRANCE.
STA. 200+97, 52' RT.
ELEVATION = 635.86

B.M.#101: CHISELED "□" IN CENTER OF HEADWALL (CROSS CULVERT) AT BOTTOM OF INFIELD ON RAMP 'C'.
ELEVATION = 605.15

NOTE:
THIS DRAWING IS SHOWING GROUND COORDINATES. GRID TO GROUND SCALE FACTOR IS: 1.0000621578

MODEL: Default
FILE NAME: P:\Civil\ IDOT DIST4\PTB 194-033 var PH I-II 3120032\WO 10 Airport Road Phase 2 3120032-10\CAD Sheets\D468886-sht-ATB.dgn

The Upchurch Group
architects engineers surveyors
Professional Design Firm Corporation License No. 184-003001
123 North 15th Street Mattoon, IL 61938
Phone: 217.235.3177
e-mail: upchurchgroup@upchurchgroup.com

USER NAME = Sta42	DESIGNED - MJS	REVISED -	
TUG PROJECT NO. 3120032-10	DRAWN - SAE	REVISED -	
PLOT SCALE = 200.0000 ' / in.	CHECKED - MJS	REVISED -	
PLOT DATE = 6/19/2023	DATE -	REVISED -	

STATE OF ILLINOIS
DEPARTMENT OF TRANSPORTATION

ALIGNMENT, TIES AND BENCHMARKS
AIRPORT ROAD OVER I-474

SCALE: 200.0000 ' / in. SHEET OF SHEETS STA. TO STA.

F.A.I. RTE.	SECTION	COUNTY	TOTAL SHEETS	SHEET NO.
474	(72-3HB-4)BR	PEORIA	175	35

CONTRACT NO. 68886
ILLINOIS | FED. AID PROJECT

LEGEND

- HMA SURFACE REMOVAL 1 1/2" (STA. 184+37 TO STA. 190+00)
  HMA SURFACE REMOVAL 1 3/4" (STA. 198+52 TO STA. 202+98)
- TREE REMOVAL, ACRES
- PAVED SHOULDER REMOVAL
- CONCRETE MEDIAN REMOVAL
- APPROACH SLAB REMOVAL
- HMA SURFACE REMOVAL BUTT JOINT
- PAVEMENT REMOVAL
- COMBINATION CURB AND GUTTER REMOVAL

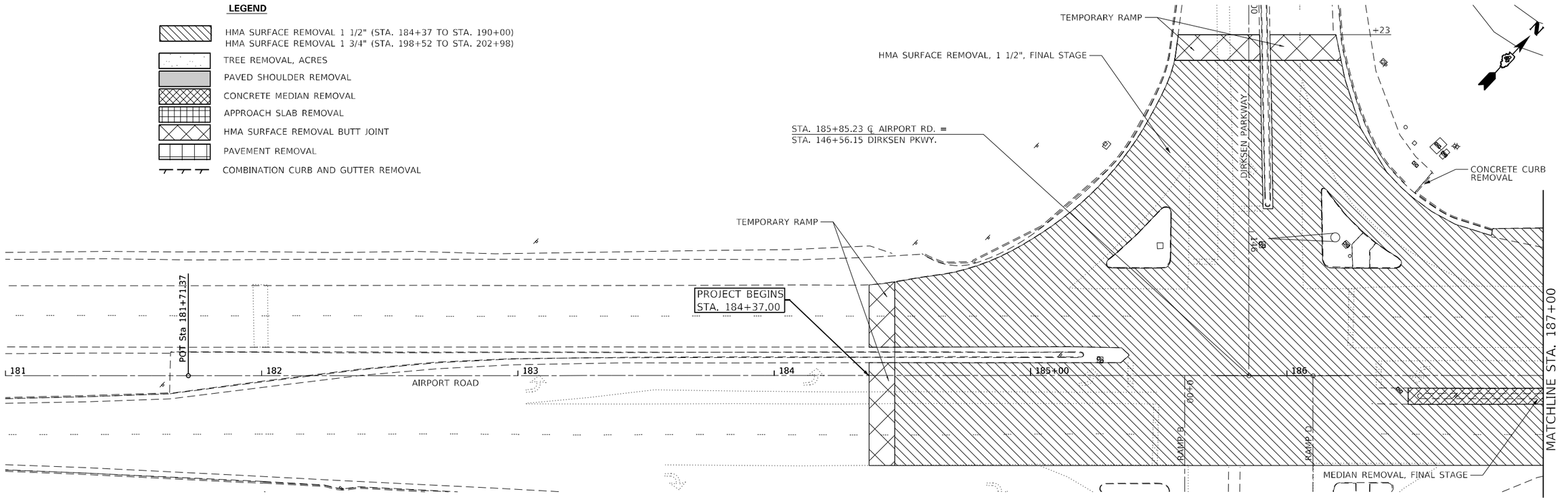

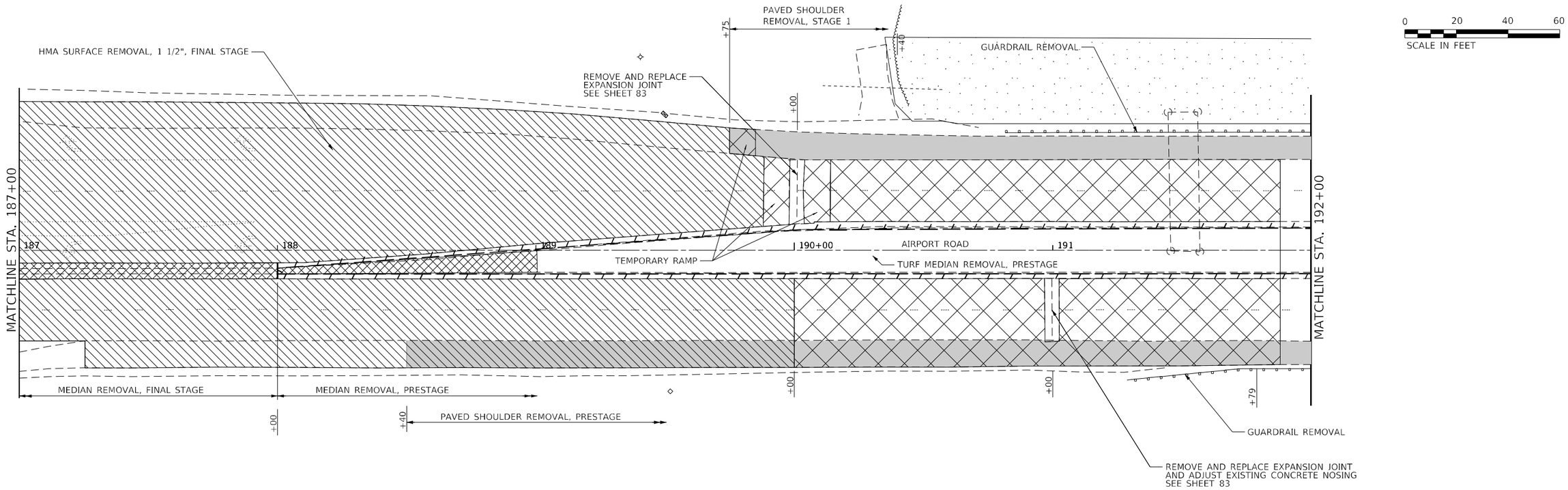

MODEL: Default
FILE NAME: P:\Civil_IDOT_DIST4\PTB 194-035 var PH I of 3 \120032\WO 10 Airport Road Phase 2 3120032-10\CAD Sheets\h468886-sht-removal1 Airport.dgn

The Upchurch Group architects engineers surveyors Professional Design Firms Corporation License No. 184-003-001 123 North 15th Street Mattoon, IL 61938 Phone: 217.235.3177 e-mail: upchurchgroup@upchurchgroup.com	USER NAME = Sta42	DESIGNED -	REVISED -
		DRAWN -	REVISED -
	PLOT SCALE = 40.0000 ' / in.	CHECKED -	REVISED -
	PLOT DATE = 6/21/2023	DATE -	REVISED -

STATE OF ILLINOIS
DEPARTMENT OF TRANSPORTATION

REMOVAL PLANS – AIRPORT ROAD
AIRPORT ROAD OVER I-474

SCALE: | SHEET 1 OF 3 SHEETS | STA. 184+37 TO STA. 192+00

F.A.I. RTE.	SECTION	COUNTY	TOTAL SHEETS	SHEET NO.
474	(72-3HB-4)BR	PEORIA	175	36
		CONTRACT NO. 68886		
	ILLINOIS	FED. AID PROJECT		

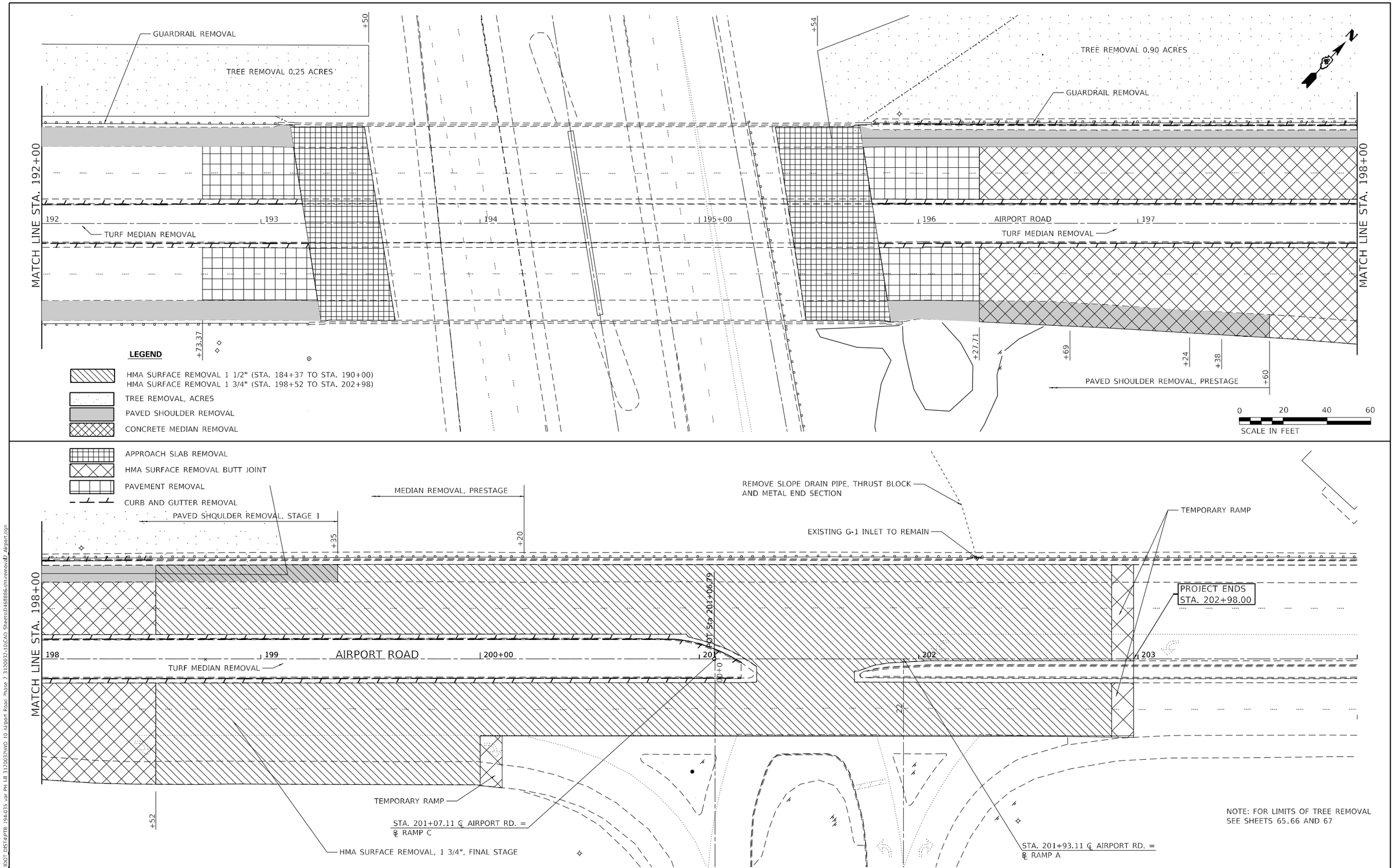

MODEL: Default
FILE NAME: P:\Civil_IDOT_DIST4\PTB 194-035 var PH I of 3 \3120032\WO 10 Airport Road Phase 2 3120032-10\CAD Sheets\0468886-sht-removal2_Airport.dgn

The Upchurch Group
architects engineers surveyors
Professional Design Firms Corporation License No. : 184-003-001
123 North 15th Street Mattoon, IL 61938 Phone: 217.235.3177
e-mail: upchurchgroup@upchurchgroup.com

USER NAME = Sta42	DESIGNED -	REVISED -
	DRAWN -	REVISED -
PLOT SCALE = 40.0000 ' / in.	CHECKED -	REVISED -
PLOT DATE = 6/20/2023	DATE -	REVISED -

STATE OF ILLINOIS
DEPARTMENT OF TRANSPORTATION

REMOVAL PLANS – AIRPORT ROAD
AIRPORT ROAD OVER I-474

SCALE: | SHEET 2 OF 3 SHEETS | STA. 192+00 TO STA. 202+98

F.A.I. RTE.	SECTION	COUNTY	TOTAL SHEETS	SHEET NO.
474	(72-3HB-4)BR	PEORIA	175	37
		CONTRACT NO. 68886		
	ILLINOIS	FED. AID PROJECT		

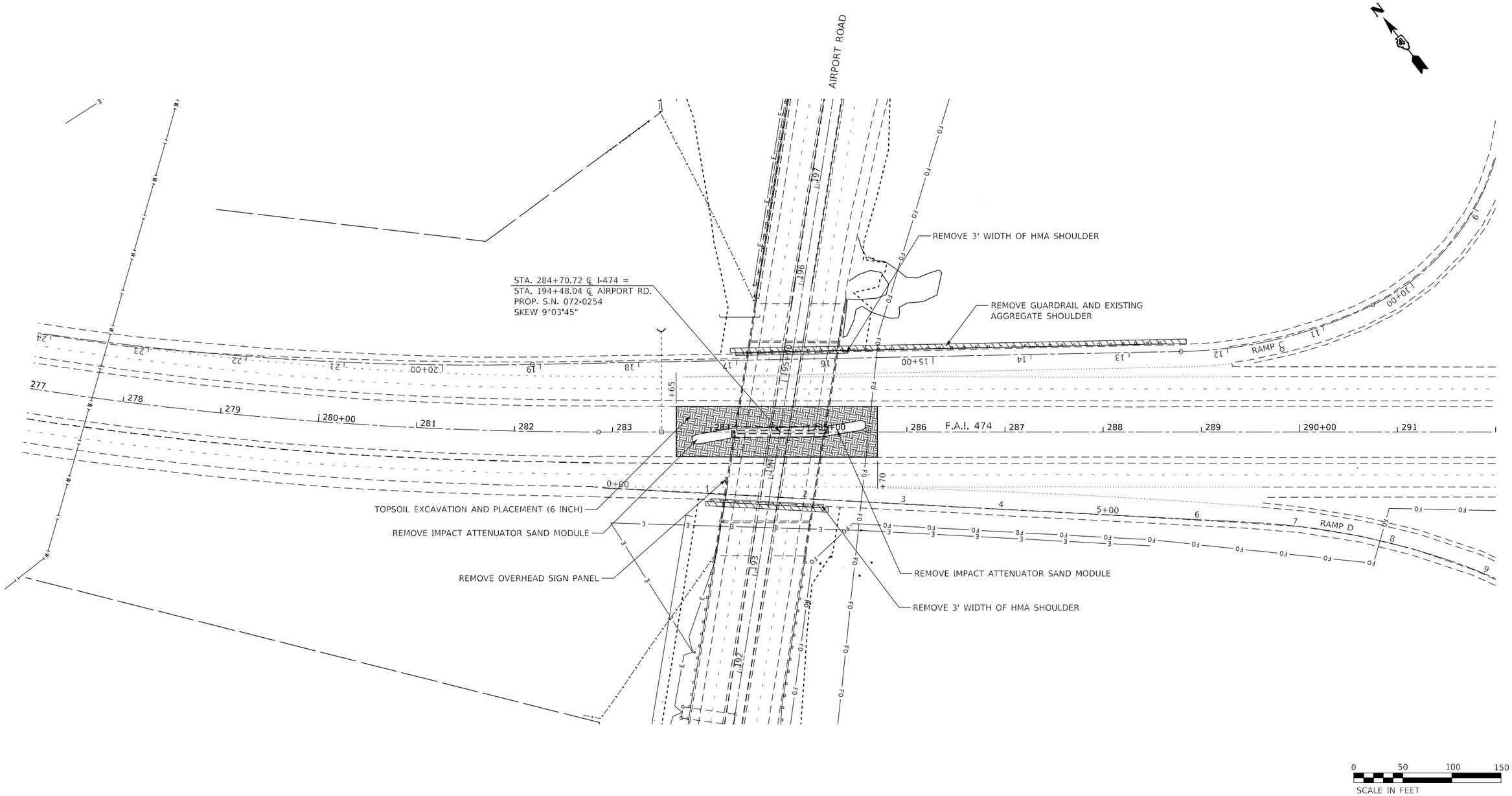

MODEL: Default
FILE NAME: P:\Civil\ IDOT DISTAUPTB 194-033 var PH I-II 3120032\WO 10 Airport Road Phase 2 3120032-10\CAD Sheets\D468886-sht-removal3_474.dgn

The Upchurch Group architects engineers surveyors Professional Design Firm Corporation License No. 184-003401 123 North 15th Street Mattoon, IL 61938 Phone: 217.235.3177 e-mail: upchurchgroup@upchurchgroup.com	USER NAME = Sta42	DESIGNED -	REVISED -	STATE OF ILLINOIS DEPARTMENT OF TRANSPORTATION	REMOVAL PLANS – I-474 AIRPORT ROAD OVER I-474	F.A.I. RTE.	SECTION	COUNTY	TOTAL SHEETS / SHEET NO.
		DRAWN -	REVISED -			474	(72-3HB-4)BR	PEORIA	175 / 38
	PLOT SCALE = 100.0000 ' / in.	CHECKED -	REVISED -					CONTRACT NO. 68886	
	PLOT DATE = 6/19/2023	DATE -	REVISED -		SCALE: 100.0000 ' / in. SHEET 3 OF 3 SHEETS STA. TO STA.		ILLINOIS	FED. AID PROJECT	

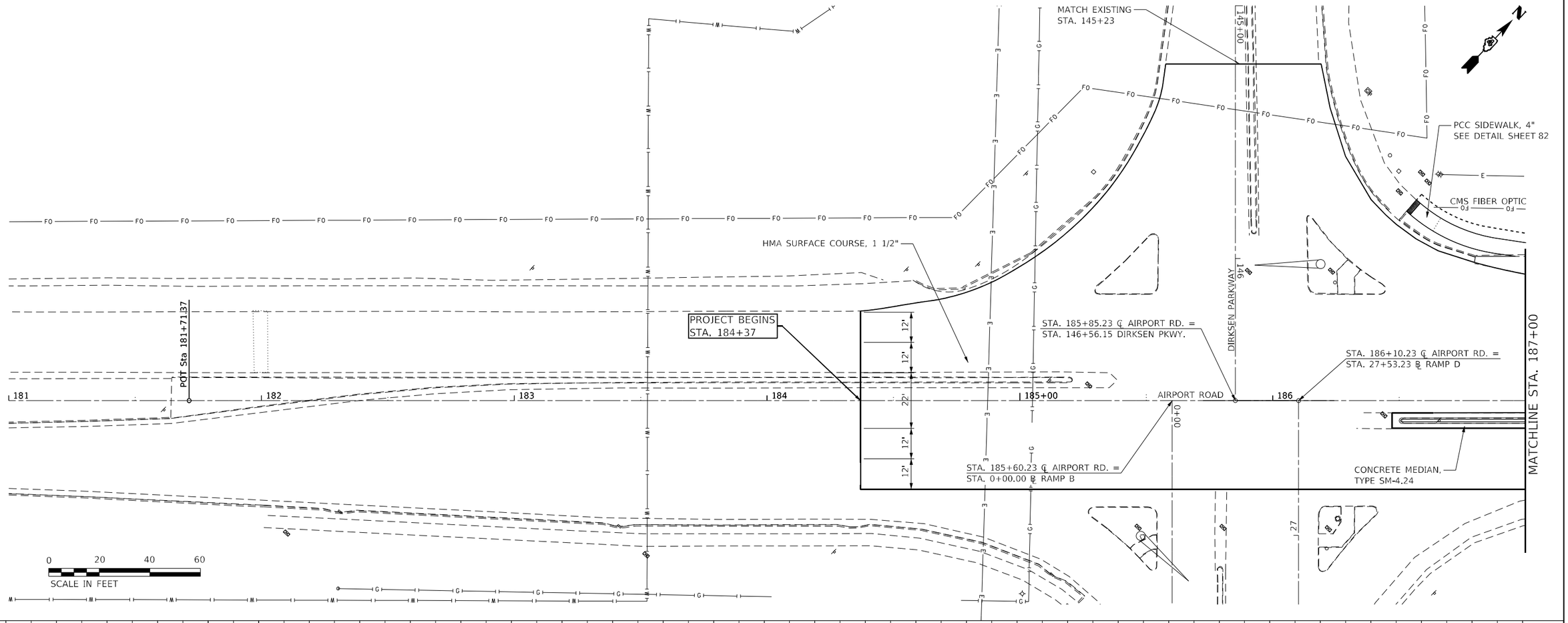

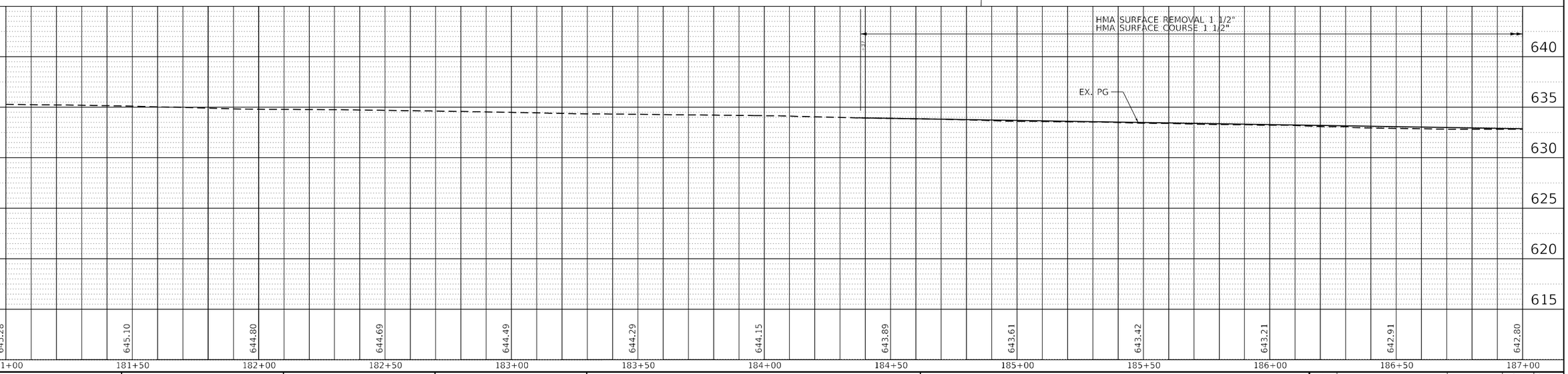

PLAN — SURVEYED / PLOTTED / ALIGNMENT CHECKED / R.O.W. CHECKED / CADD FILE NAME — NOTE BOOK NO. — BY — DATE

PROFILE — SURVEYED / PLOTTED / GRADES CHECKED / B.M. NOTED / STRUCTURE NOTAT'NS CHKD — NOTE BOOK NO. — BY — DATE

MODEL: Default
FILE NAME: P:\Civil_IDOT_DIST4\PTB 194-035 var PH III 3120032\WD 10 Airport Road Phase 2 3120032-10CAD Sheets\PH68886-sht-plhpr1_Airport.dgn

The Upchurch Group
architects engineers surveyors
Professional Design Firm Corporation
License No. 184-001401
123 North 15th Street
Mattoon, IL 61938
Phone: 217.235.3177
e-mail: upchurchgroup@upchurchgroup.com

USER NAME = Sta42	DESIGNED -	REVISED -
	DRAWN -	REVISED -
PLOT SCALE = 40.0000 ' / in.	CHECKED -	REVISED -
PLOT DATE = 6/19/2023	DATE -	REVISED -

STATE OF ILLINOIS
DEPARTMENT OF TRANSPORTATION

PLAN AND PROFILE – AIRPORT ROAD
AIRPORT ROAD OVER I-474

SCALE: 40.0000 ' / in. SHEET 1 OF 5 SHEETS STA. 184+37 TO STA. 187+00

F.A.I. RTE.	SECTION	COUNTY	TOTAL SHEETS	SHEET NO.
474	(72-3HB-4)BR	PEORIA	175	39
		CONTRACT NO. 68886		
		ILLINOIS	FED. AID PROJECT	

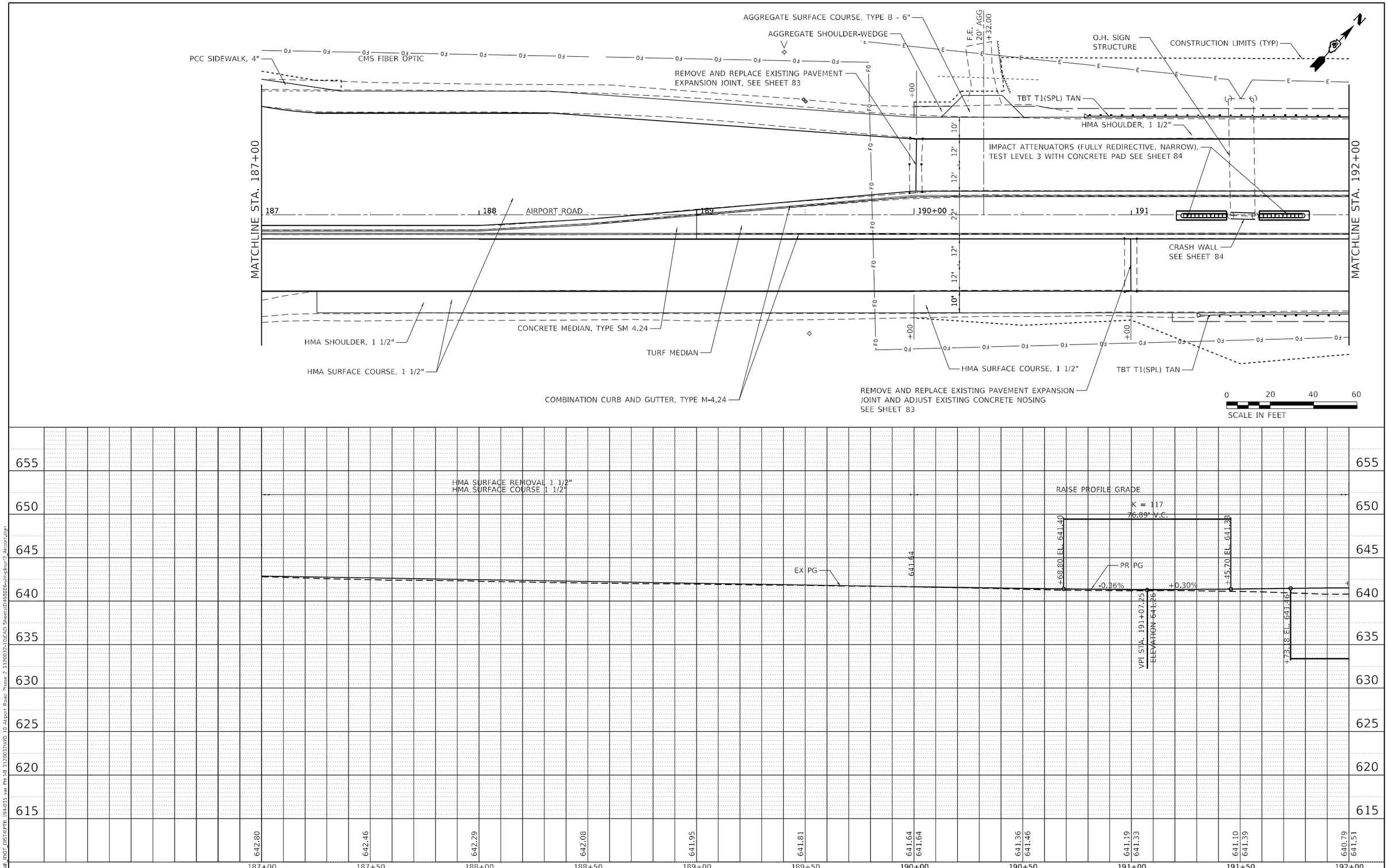

PLAN
NOTE BOOK NO.
SURVEYED
PLOTTED
ALIGNMENT CHECKED
R/ OF WAY CHECKED
CADD FILE NAME
BY
DATE

PROFILE
NOTE BOOK NO.
SURVEYED
PLOTTED
GRADES CHECKED
B.M. NOTED
STRUCTURE NOTATIONS CHKD
BY
DATE

MODEL: Default
FILE NAME: P:\Civil_IDOT_DIST4\PTB 194-035 var PH-III 3120032\WO 10 Airport Road Phase 2 3120032-10\CAD Sheets\D168886-sht-plhpr2_Airport.dgn

The Upchurch Group
architects engineers surveyors
Professional Design Firm Corporation License No. 184-003401
123 North 15th Street Mattoon, IL 61938 Phone: 217.235.3177
e-mail: upchurchgroup@upchurchgroup.com

USER NAME = Sta42	DESIGNED - MJS	REVISED -
TUG PROJECT NO. 3120032-10	DRAWN -	REVISED -
PLOT SCALE = 40.0000 ' / in.	CHECKED - MJS	REVISED -
PLOT DATE = 6/21/2023	DATE -	REVISED -

STATE OF ILLINOIS
DEPARTMENT OF TRANSPORTATION

PLAN AND PROFILE – AIRPORT ROAD
AIRPORT ROAD OVER I-474

SCALE: 40.0000 ' / in. SHEET 2 OF 5 SHEETS STA. 187+00 TO STA. 192+00

F.A. RTE.	SECTION	COUNTY	TOTAL SHEETS	SHEET NO.
6578	(72-3HB-4)BR	PEORIA	175	40

CONTRACT NO. 68886

ILLINOIS | FED. AID PROJECT

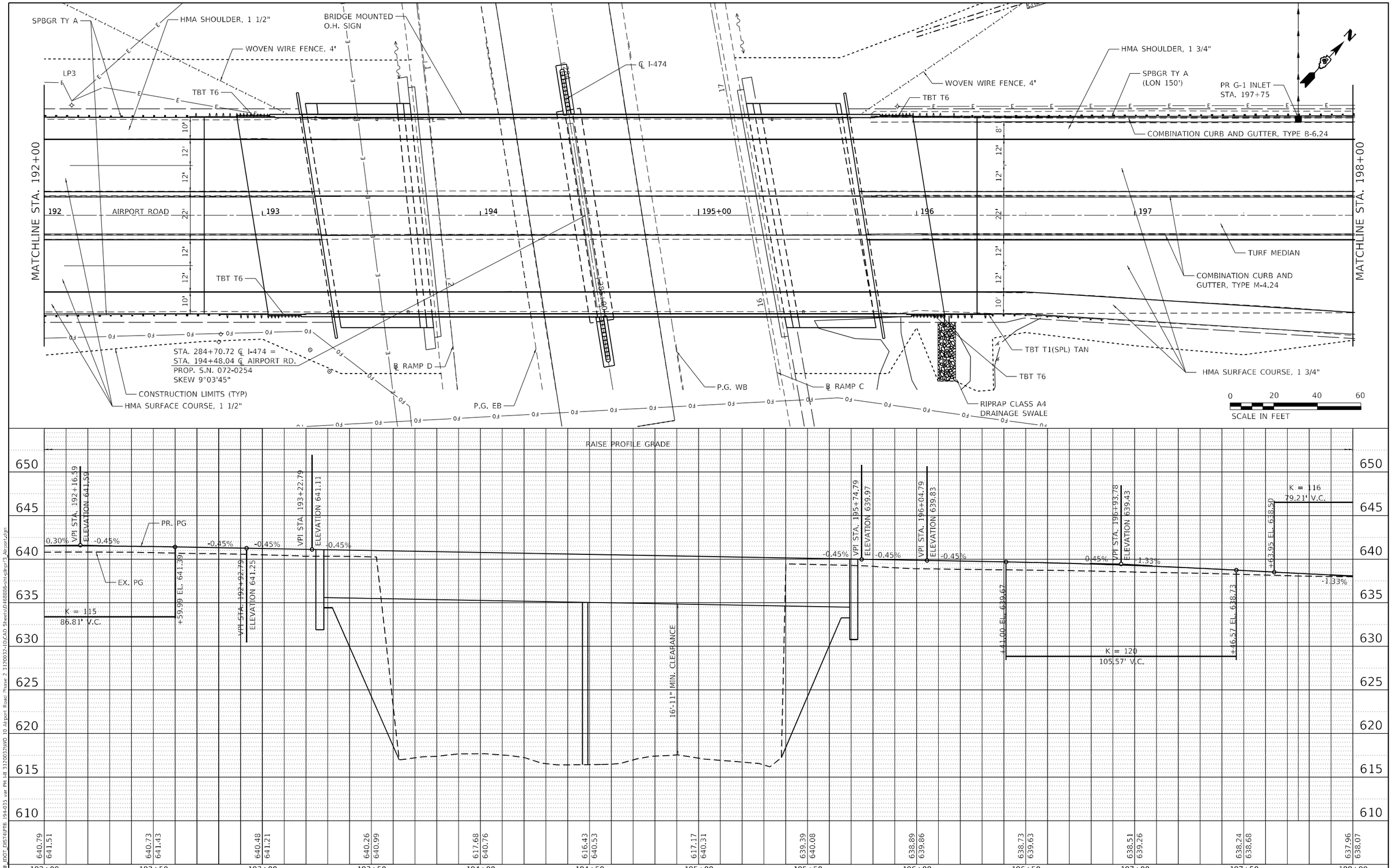

PLAN — SURVEYED / PLOTTED / ALIGNMENT CHECKED / R.O.W. CHECKED / CADD FILE NAME — NOTE BOOK NO. — BY — DATE

PROFILE — SURVEYED / PLOTTED / GRADES CHECKED / B.M. NOTED / STRUCTURE NOTATIONS CHKD — NOTE BOOK NO. — BY — DATE

MODEL: Default
FILE NAME: P:\Civil_IDOT_DIST4\PTB 194-035 var PH-III 3120032\WO 10 Airport Road Phase 2 3120032-10\CAD Sheets\D168886-sht-plhpr3_Airport.dgn

The Upchurch Group
architects engineers surveyors
Professional Design Firm Corporation License No. 184-003491
123 North 15th Street Mattoon, IL 61938 Phone: 217.235.3177
e-mail: upchurchgroup@upchurchgroup.com

USER NAME = Sta42	DESIGNED - MJS	REVISED -
TUG PROJECT NO. 3120032-10	DRAWN -	REVISED -
PLOT SCALE = 40.0000 ' / in.	CHECKED - MJS	REVISED -
PLOT DATE = 6/19/2023	DATE -	REVISED -

STATE OF ILLINOIS
DEPARTMENT OF TRANSPORTATION

PLAN AND PROFILE – AIRPORT ROAD
AIRPORT ROAD OVER I-474

SCALE: 40.0000 ' / in. | SHEET 3 OF 5 SHEETS | STA. 192+00 TO STA. 198+00

F.A. RTE.	SECTION	COUNTY	TOTAL SHEETS	SHEET NO.
6578	(72-3HB-4)BR	PEORIA	175	41

CONTRACT NO. 68886

ILLINOIS | FED. AID PROJECT

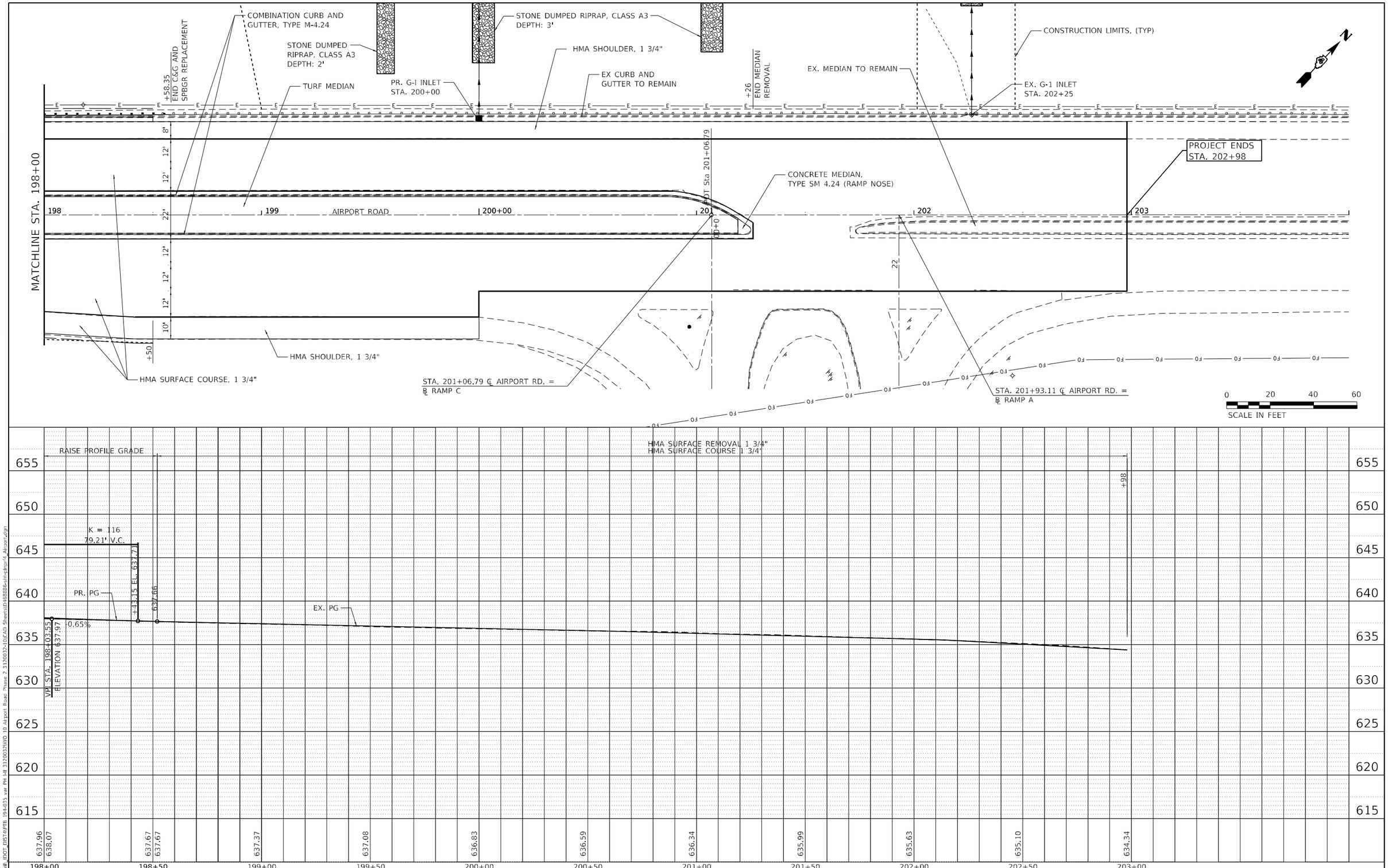

PLAN — SURVEYED / PLOTTED / ALIGNMENT CHECKED / R.O.W. CHECKED / CADD FILE NAME / NOTE BOOK NO. / BY / DATE

PROFILE — SURVEYED / PLOTTED / GRADES CHECKED / B.M. NOTED / STRUCTURE NOTATIONS CHKD / NOTE BOOK NO. / BY / DATE

MODEL: Default
FILE NAME: P:\Civil_IDOT_DIST4\PTB 194-035 var PH-III 3120032\WO 10 Airport Road Phase 2 3120032-10\CAD Sheets\D168886-sht-plhpr(4_Airport).dgn

The Upchurch Group
architects engineers surveyors
Professional Design Firm Corporation
License No. 184-003491
123 North 15th Street
Mattoon, IL 61938
Phone: 217.235.3177
e-mail: upchurchgroup@upchurchgroup.com

USER NAME = Sta42	DESIGNED - MJS	REVISED -
TUG PROJECT NO. 3120032-10	DRAWN -	REVISED -
PLOT SCALE = 40.0000 ' / in.	CHECKED - MJS	REVISED -
PLOT DATE = 6/21/2023	DATE -	REVISED -

STATE OF ILLINOIS
DEPARTMENT OF TRANSPORTATION

PLAN AND PROFILE – AIRPORT ROAD
AIRPORT ROAD OVER I-474

SCALE: 40.0000 ' / in. | SHEET 4 OF 5 SHEETS | STA. 198+00 TO STA. 202+98

F.A. RTE.	SECTION	COUNTY	TOTAL SHEETS	SHEET NO.
6578	(72-3HB-4)BR	PEORIA	175	42

CONTRACT NO. 68886

ILLINOIS | FED. AID PROJECT

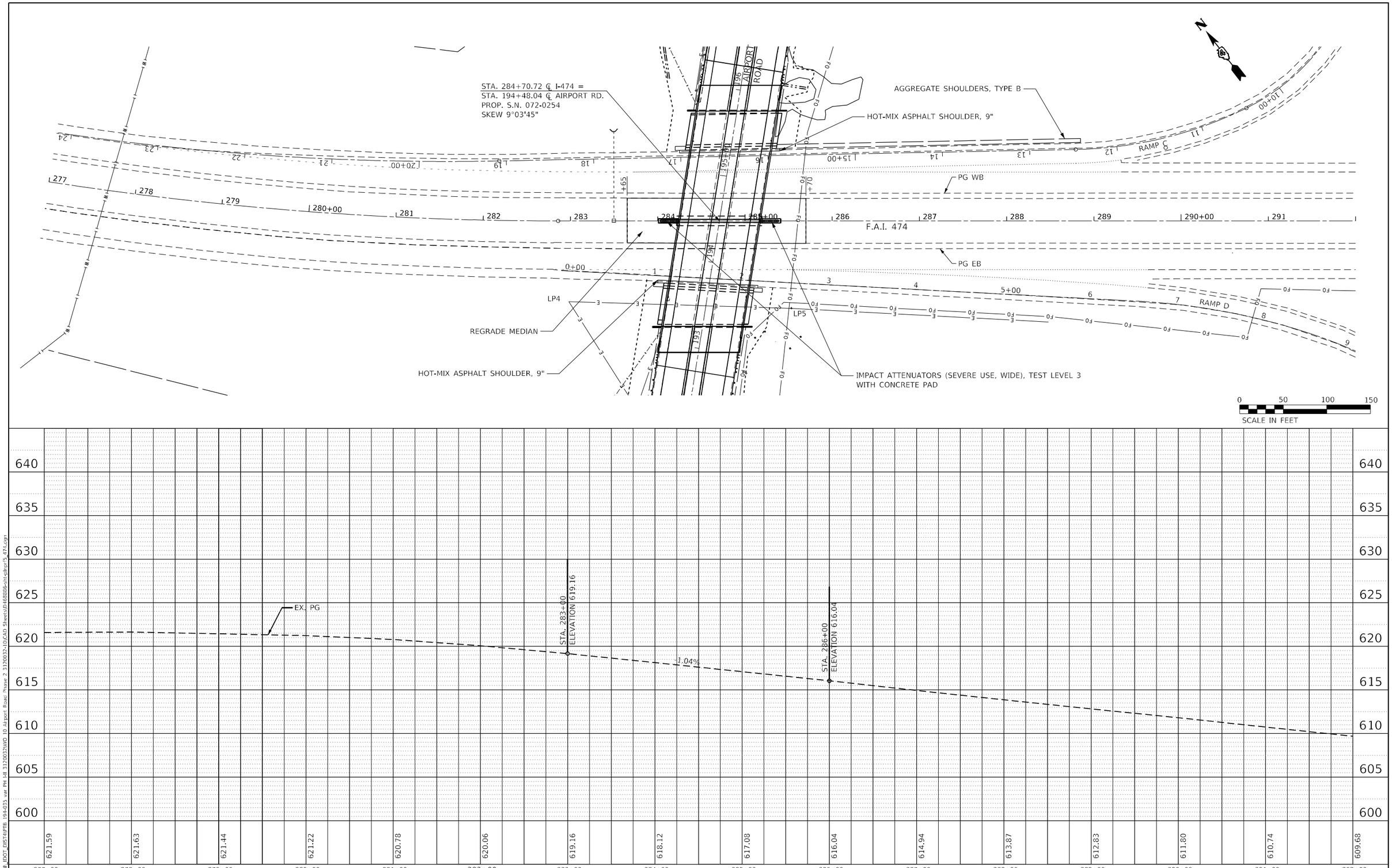

PLAN	SURVEYED	PLOTTED	ALIGNMENT CHECKED	R.O.W. CHECKED	CADD FILE NAME	NOTE BOOK	NO.	BY	DATE

PROFILE	SURVEYED	PLOTTED	ALIGNMENT CHECKED	R.O.W. CHECKED	STRUCTURE NOTATIONS CHKD	NOTE BOOK	NO.	BY	DATE

MODEL: Default
FILE NAME: P:\Civil_IDOT_DIST4\PTB 194-035 var PH-III 3120032\WO 10 Airport Road Phase 2 3120032-10\CAD Sheets\D168886-sht-plhpr15_471.dgn

The Upchurch Group
architects engineers surveyors
Professional Design Firm Corporation
License No. 184-003401
123 North 15th Street
Mattoon, IL 61938
Phone: 217.235.3177
e-mail: upchurchgroup@upchurchgroup.com

USER NAME = Sta42	DESIGNED - MJS	REVISED -
TUG PROJECT NO. 3120032-10	DRAWN -	REVISED -
PLOT SCALE = 100.0000 ' / in.	CHECKED - MJS	REVISED -
PLOT DATE = 6/20/2023	DATE -	REVISED -

STATE OF ILLINOIS
DEPARTMENT OF TRANSPORTATION

PLAN AND PROFILE – I-474
AIRPORT ROAD OVER I-474

SCALE: 100.0000 ' / in. SHEET 5 OF 5 SHEETS STA. TO STA.

F.A. RTE.	SECTION	COUNTY	TOTAL SHEETS	SHEET NO.
6578	(72-3HB-4)BR	PEORIA	175	43

CONTRACT NO. 68886

ILLINOIS | FED. AID PROJECT

SUGGESTED STAGE CONSTRUCTION SEQUENCE

PRESTAGE – AIRPORT ROAD

1. REMOVE EXISTING SHOULDERS AND CONSTRUCT SHOULDER TEMPORARY PAVEMENT AND AGGREGATE SHOULDERS STA 188+40 RT TO STA 193+26 RT AND STA 196+74 RT TO STA 198+00 RT (STD 701602 AND 701701) ALL MEDIAN TEMPORARY PAVEMENT TO BE CONSTRUCTED IN PRESTAGE.
2. REMOVE EXISTING CURB AND GUTTER AND TURF MEDIAN AND CONSTRUCT MEDIAN TEMPORARY PAVEMENT STA 188+00 TO STA 191+40 AND STA 197+25 TO STA 200+20 (STD 701602 AND 701701)
3. ERECT TRAFFIC CONTROL FOR STAGE 1 (STD 701602 AND 701701)

PRESTAGE – I–474

1. CONSTRUCT PROTECTIVE SHIELD OVER I-474 (STD 701406 AND 701428)
2. ERECT TRAFFIC CONTROL (STD 701406, 701411 AND 701428)
3. RELOCATE EXISTING BRIDGE MOUNTED OVERHEAD SIGN

STAGE 1 – AIRPORT ROAD

1. REMOVE EXISTING BRIDGE AND PAVEMENT LT AND CONSTRUCT PROPOSED BRIDGE LT
2. CONSTRUCT EMBANKMENT, CURB AND GUTTER, AND DRAINAGE STRUCTURES LT
3. CONSTRUCT TEMPORARY PAVEMENT, AGGREGATE BASE COURSE AND AGGREGATE SHOULDERS LT STA 189+75 TO STA 192+73.36 AND STA 196+27.72 TO STA 199+35
4. CONSTRUCT HMA SURFACE REMOVAL-BUTT JOINT, HMA BINDER COURSE, TEMPORARY RAMPS AT PAVEMENT CONNECTORS, GUARDRAIL AND TERMINALS.
5. INSTALL PROPOSED BRIDGE MOUNTED OVERHEAD SIGN AND REMOVE RELOCATED BRIDGE MOUNTED OVERHEAD SIGN
6. ERECT TRAFFIC CONTROL FOR STAGE 2 (STD 701602 AND 701701)

STAGE 1 – I–474

1. RELOCATE ELECTRICAL POWER SUPPLY TO ROADWAY LIGHTING PRIOR TO REMOVING EXISTING SOUTH ABUTMENT
2. FULL NIGHTTIME CLOSURE OF ALL LANES WILL BE ALLOWED FOR REMOVAL AND REPLACEMENT OF THE BRIDGE BEAMS. SEE SPECIAL PROVISIONS AND DETOUR SHEETS FOR EB I-474 AND WB I-474 CLOSURE REQUIREMENTS.

STAGE 2 – AIRPORT ROAD

1. REMOVE EXISTING BRIDGE AND PAVEMENT RT AND CONSTRUCT PROPOSED BRIDGE RT
2. CONSTRUCT HMA SURFACE REMOVAL-BUTT JOINT, HMA BINDER COURSE, TEMPORARY RAMPS AT PAVEMENT CONNECTORS, GUARDRAIL AND TERMINALS, AND ALL EARTHWORK AND GRADING RT

STAGE 2 – I–474

1. INTERMITTENT SHORT TERM (15 MINUTE) FULL LANE CLOSURE OF ALL LANES WILL BE ALLOWED FOR REMOVAL AND REPLACEMENT OF THE BRIDGE BEAMS (SEE SPECIAL PROVISIONS)
2. REMOVE AND REPLACE SLOPE WALL, REMOVE AND REPLACE HMA SHOULDERS REQUIRED TO CONSTRUCT SLOPEWALL, REMOVE GUARDRAIL AND REPLACE AGGREGATE SHOULDERS.
3. COMPLETE ALL GRADING AND LANDSCAPING AT ABUTMENTS AND MEDIAN PIER
4. CONSTRUCT IMPACT ATTENUATORS AT MEDIAN PIER, PUNCH LIST AND CLEAN UP
5. REMOVE ALL TEMPORARY CONCRETE BARRIERS AND OTHER TRAFFIC CONTROL ITEMS ASSOCIATED WITH THE TRAFFIC CONTROL

FINAL – AIRPORT ROAD

1. REMOVE ALL TRAFFIC CONTROL AND RE-ESTABLISH NORMAL TRAFFIC PATTERNS (STD 701602 AND 701701)
2. INSTALL SHORT TERM PAVEMENT MARKING LINES FOR THE CENTERLINE, OUTSIDE EDGE OF PAVEMENT LINES, LANE LINES, MEDIAN LINES, STOP BARS, AND SYMBOLS.
3. REMOVE CROSSOVER PAVEMENTS (SEE SPECIAL PROVISION "TEMPORARY PAVEMENT REMOVAL"), CONSTRUCT MEDIAN CURB AND GUTTER, TURF MEDIAN AND OVERHEAD SIGN IMPACT ATTENUATORS (STD 701602)
4. CONSTRUCT HMA SURFACE REMOVAL, HMA SURFACE COURSE AND HMA SHOULDERS TOP LIFT UNDER TRAFFIC WITH FLAGGERS (STD 701201 AND 701701)
5. FINAL STRIPING AND MISCELLANEOUS CLEANUP

GENERAL NOTES

1. EXISTING PAVEMENT MARKINGS THAT CONFLICT WITH THE REVISED TRAFFIC PATTERNS DURING ALL PHASES OF STAGE CONSTRUCTION SHALL BE REMOVED
2. THE CONTRACTOR SHALL MAINTAIN ACCESS TO ALL PRIVATE AND COMMERCIAL PROPERTIES DURING ALL PHASES OF CONSTRUCTION
3. WIDTH RESTRICTION SIGNING SHALL BE INSTALLED ACCORDING TO THE SPECIAL PROVISION TITLED "WIDTH RESTRICTION SIGNING". SIX SETS OF SIGNS, INCLUDING SIGN ASSEMBLY A WILL BE REQUIRED

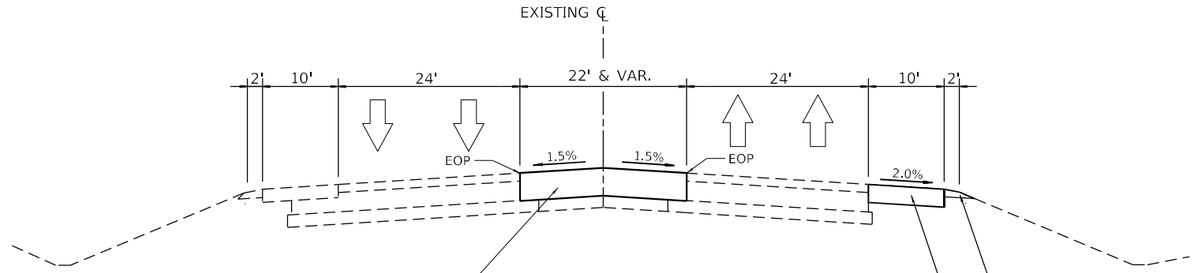

REMOVE EXISTING CURB AND GUTTER AND TURF MEDIAN. CONSTRUCT TEMPORARY PAVEMENT STA 188+00 TO STA 191+40 AND STA 197+25 TO STA 200+20 FULL WIDTH EOP TO EOP. EXTEND EXISTING EOP ELEVATIONS TO THE CENTERLINE USING EXISTING CROSS FALLS. CROWN LOCATED AT CENTERLINE. ALL CROSSOVER TEMPORARY PAVEMENT TO BE CONSTRUCTED DURING PRESTAGE.

SECTION – PRESTAGE

AGGREGATE SHOULDER, 6"

REMOVE EXISTING HMA SHOULDER AND CONSTRUCT TEMPORARY PAVEMENT STA 188+40 TO STA 193+26 AND STA 195+74 TO STA 197+60

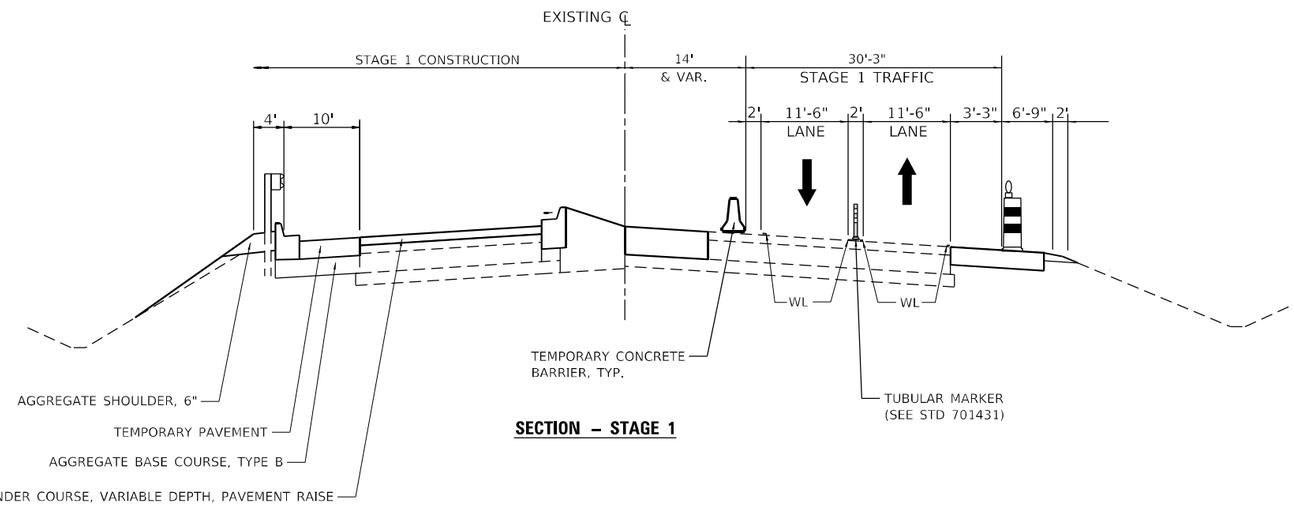

SECTION – STAGE 1

SYMBOLS

- DRUM WITH STEADY BURNING MONODIRECTIONAL LIGHT
- WL WHITE PAVEMENT MARKING - LINE 4" - TYPE IV TAPE
- YL YELLOW PAVEMENT MARKING - LINE 4" - TYPE IV TAPE

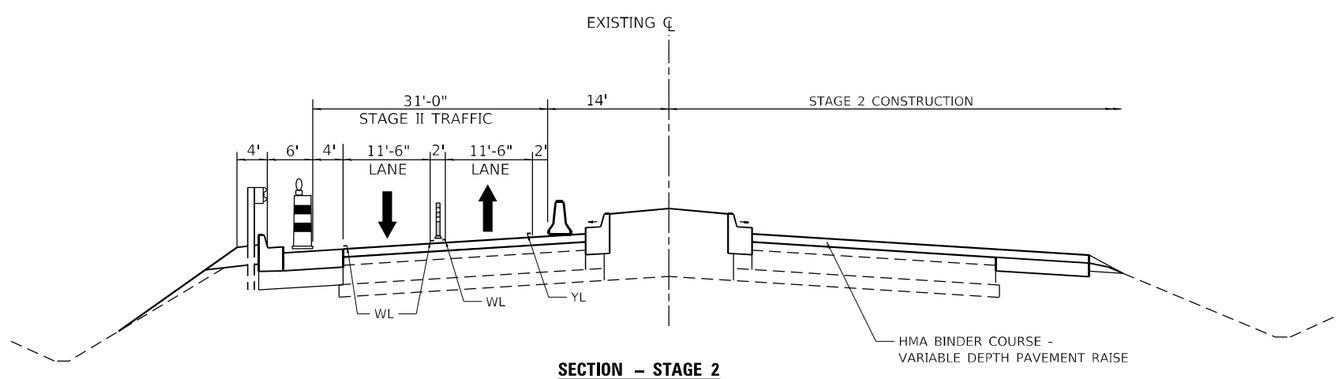

SECTION – STAGE 2

MODEL: Default
FILE NAME: P:\CWR_IDOT_DISTAUPTB_194-035 var PH I-II 3120032\WO 10 Airport Road Phase 2 3120032-10\CAD Sheets\D468886-sht-trafficplan\Airport.dgn

The Upchurch Group architects engineers surveyors Professional Design Firm Corporation License No. 184-003401 123 North 15th Street Mattoon, IL 61938 Phone: 217.235.3177 e-mail: upchurchgroup@upchurchgroup.com	USER NAME = Sta42	DESIGNED - MJS	REVISED -	STATE OF ILLINOIS DEPARTMENT OF TRANSPORTATION	TRAFFIC CONTROL PLAN – TYPICAL SECTIONS AIRPORT ROAD AIRPORT ROAD OVER I–474
	TUG PROJECT NO. 3120032-10	DRAWN -	REVISED -		
	PLOT SCALE = 100.0000 ' / in.	CHECKED - MJS	REVISED -		
	PLOT DATE = 6/21/2023	DATE -	REVISED -		SCALE: 100.0000 ' / in. SHEET OF SHEETS STA. TO STA.

F.A.I. RTE.	SECTION	COUNTY	TOTAL SHEETS	SHEET NO.
474	(72-3HB-4)BR	PEORIA	175	45
		CONTRACT NO. 68886		
	ILLINOIS	FED. AID PROJECT		

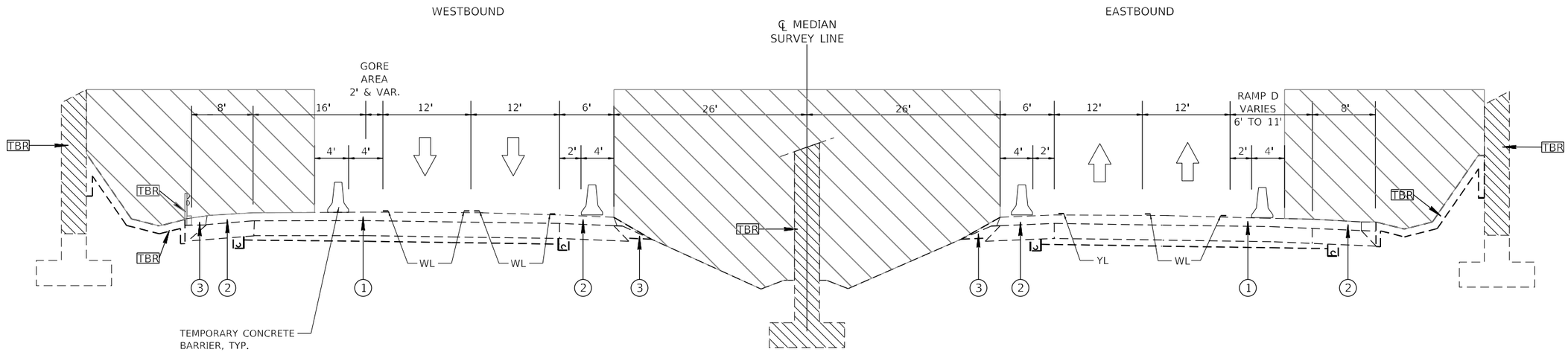

TYPICAL SECTION I–474

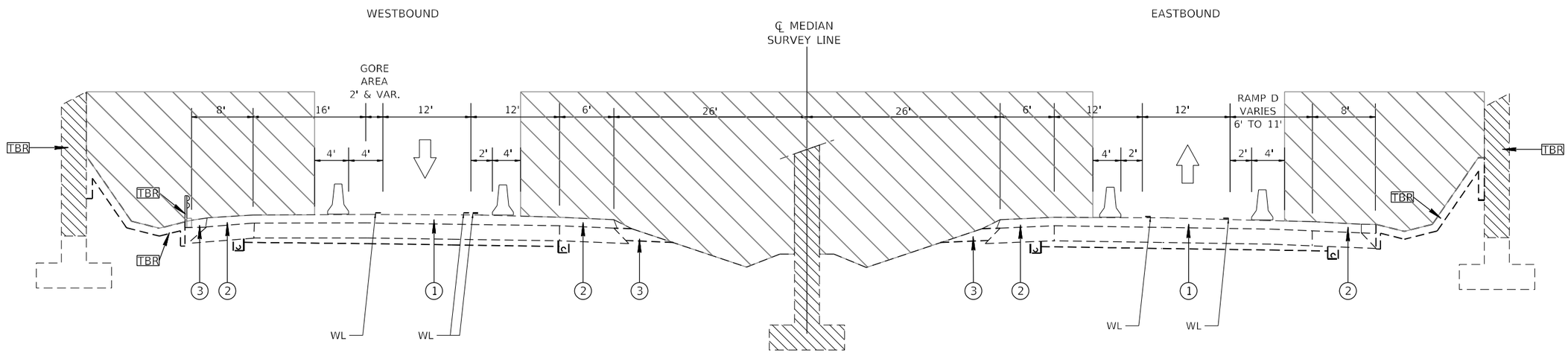

TYPICAL SECTION I–474 – DURING BEAM PLACEMENT ONLY
(SEE SPECIAL PROVISIONS FOR DURATION)

SYMBOLS

WL WHITE PAVEMENT MARKING - LINE 4" - TYPE IV TAPE

YL YELLOW PAVEMENT MARKING - LINE 4" - TYPE IV TAPE

(1) PAVEMENT
(2) ASPHALT SHOULDERS
(3) AGGREGATE SHOULDERS

MODEL: Default
FILE NAME: P:\CWR_IDOT_DISTAUPTB_194-035 var PH I-II 3120032\WO 10 Airport Road Phase 2 3120032-10\CAD Sheets\D468886-sht-staging typical 474.dgn

The Upchurch Group
architects engineers surveyors
Professional Design Firm Corporation
License No. 184-003401
e-mail: upchurchgroup@upchurchgroup.com
123 North 15th Street
Mattoon, IL 61938
Phone: 217.235.3177

USER NAME = Sta42	DESIGNED - MJS	REVISED -
TUG PROJECT NO. 3120032-10	DRAWN -	REVISED -
PLOT SCALE = 100.0000 ' / in.	CHECKED - MJS	REVISED -
PLOT DATE = 6/19/2023	DATE -	REVISED -

STATE OF ILLINOIS
DEPARTMENT OF TRANSPORTATION

TRAFFIC CONTROL PLANS – TYPICAL SECTIONS I–474
AIRPORT ROAD OVER I–474

SCALE: 100.0000 ' / in. SHEET OF SHEETS STA. TO STA.

F.A.I. RTE.	SECTION	COUNTY	TOTAL SHEETS	SHEET NO.
474	(72-3HB-4)BR	PEORIA	175	46
		CONTRACT NO. 68886		
	ILLINOIS	FED. AID PROJECT		

USE COMPONENTS FROM TCP STD. 701431

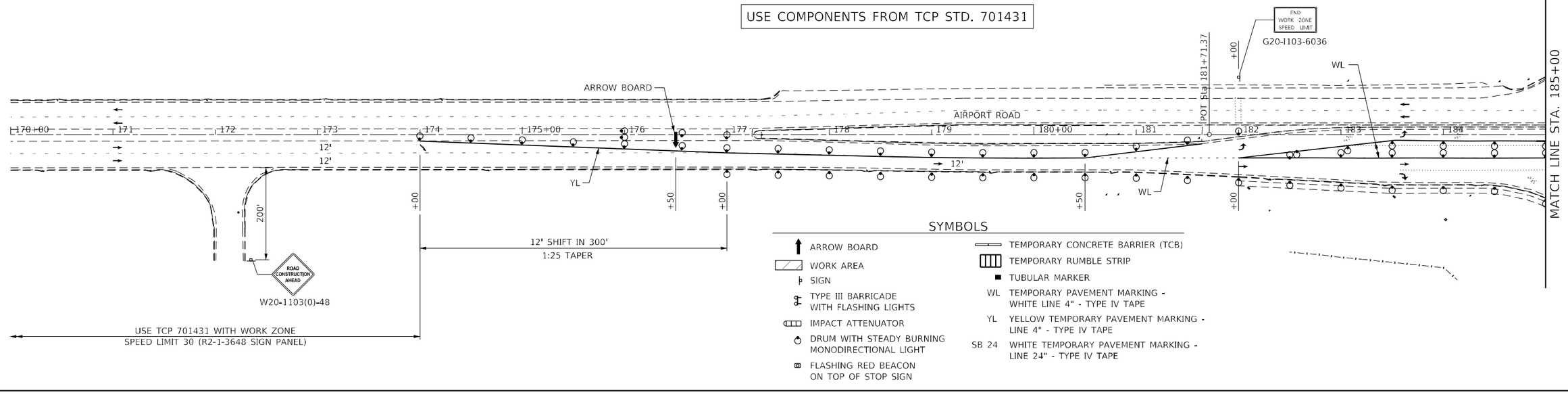

SYMBOLS

- ARROW BOARD
- WORK AREA
- SIGN
- TYPE III BARRICADE WITH FLASHING LIGHTS
- IMPACT ATTENUATOR
- DRUM WITH STEADY BURNING MONODIRECTIONAL LIGHT
- FLASHING RED BEACON ON TOP OF STOP SIGN
- TEMPORARY CONCRETE BARRIER (TCB)
- TEMPORARY RUMBLE STRIP
- TUBULAR MARKER
- WL TEMPORARY PAVEMENT MARKING - WHITE LINE 4" - TYPE IV TAPE
- YL YELLOW TEMPORARY PAVEMENT MARKING - LINE 4" - TYPE IV TAPE
- SB 24 WHITE TEMPORARY PAVEMENT MARKING - LINE 24" - TYPE IV TAPE

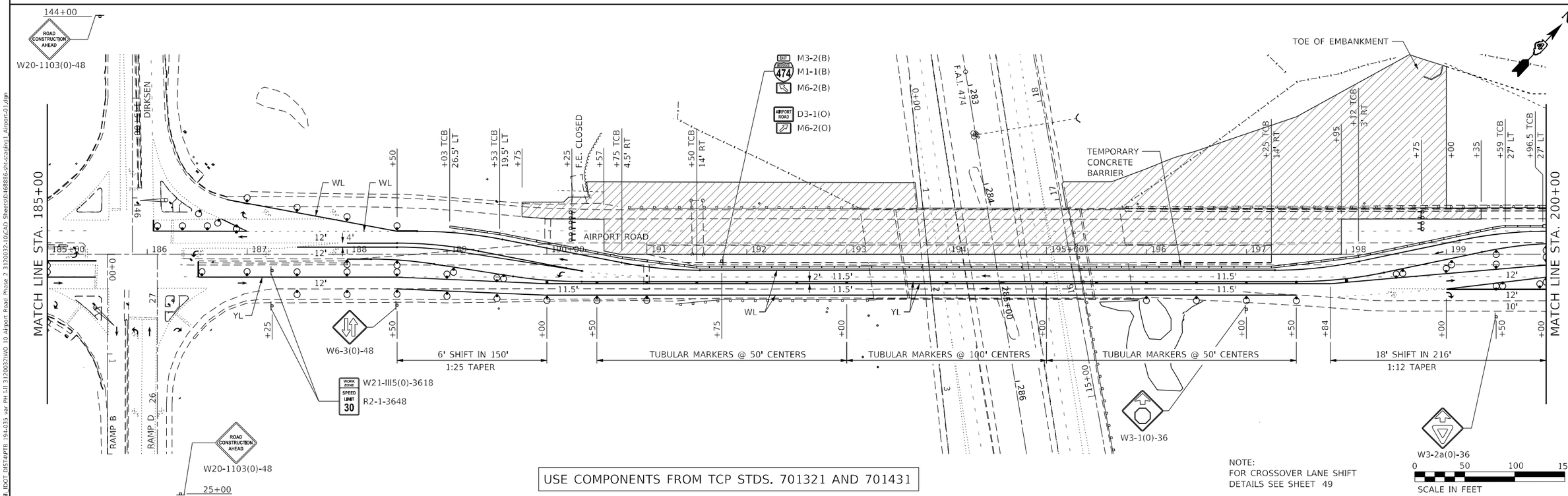

USE COMPONENTS FROM TCP STDS. 701321 AND 701431

NOTE:
FOR CROSSOVER LANE SHIFT
DETAILS SEE SHEET 49

MODEL: Default
FILE NAME: P:\Civil_IDOT_DIST4\PTB 194-035 var PH 1-II 3120032\WO 10 Airport Road Phase 2 3120032-10\CAD Sheets\D468886-ph-staging_Airport-01.dgn

The Upchurch Group architects engineers surveyors Professional Design Firm Corporation License No. 184-001001 123 North 15th Street Mattoon, IL 61938 Phone: 217.235.3177 e-mail: upchurchgroup@upchurchgroup.com	USER NAME = Sta42	DESIGNED - MJS	REVISED -
	TUG PROJECT NO. 3120032-10	DRAWN - SAE	REVISED -
	PLOT SCALE = 100.0000 ' / in.	CHECKED - MJS	REVISED -
	PLOT DATE = 6/19/2023	DATE -	REVISED -

STATE OF ILLINOIS
DEPARTMENT OF TRANSPORTATION

TRAFFIC CONTROL PLANS – STAGE 1 AIRPORT ROAD
AIRPORT ROAD OVER I–474

SCALE: 100.0000 ' / in. SHEET OF SHEETS STA. 170+00 TO STA. 200+00

F.A.I. RTE.	SECTION	COUNTY	TOTAL SHEETS	SHEET NO.
474	(72-3HB-4)BR	PEORIA	175	47
		CONTRACT NO. 68886		
		ILLINOIS FED. AID PROJECT		

USE COMPONENTS FROM TCP STD. 701431

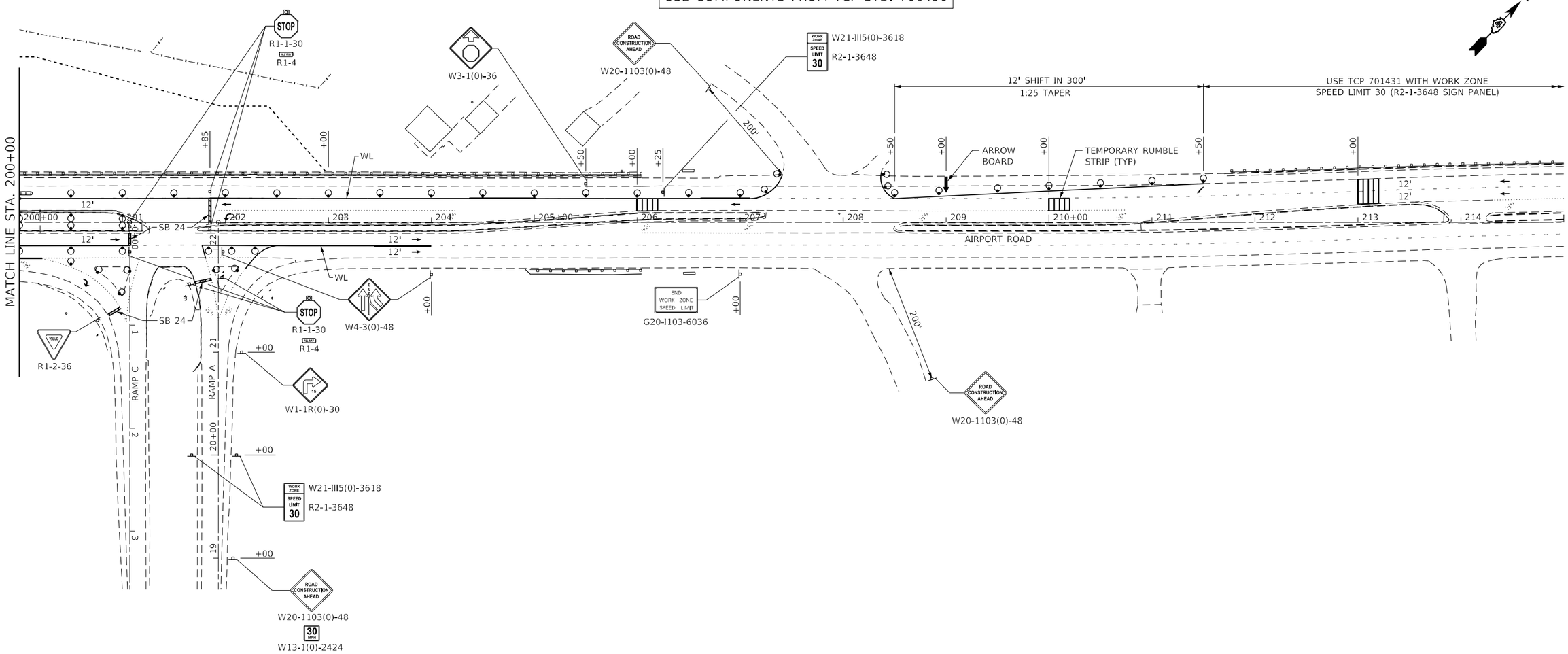

SYMBOLS

- ARROW BOARD
- WORK AREA
- SIGN
- TYPE III BARRICADE WITH FLASHING LIGHTS
- IMPACT ATTENUATOR
- DRUM WITH STEADY BURNING MONODIRECTIONAL LIGHT
- FLASHING RED BEACON ON TOP OF STOP SIGN
- TEMPORARY CONCRETE BARRIER (TCB)
- TEMPORARY RUMBLE STRIP
- TUBULAR MARKER
- WL TEMPORARY PAVEMENT MARKING - WHITE LINE 4" - TYPE IV TAPE
- YL YELLOW TEMPORARY PAVEMENT MARKING - LINE 4" - TYPE IV TAPE
- SB 24 WHITE TEMPORARY PAVEMENT MARKING - LINE 24" - TYPE IV TAPE

0 50 100 150
SCALE IN FEET

MODEL: Default
FILE NAME: P:\Civil\ IDOT DISTAUPTB 194-035 var PH I-II 3120032\WO 10 Airport Road Phase 2 3120032-10\CAD Sheets\D468886-sht-staging1_Airport-02.dgn

The Upchurch Group
architects engineers surveyors
Professional Design Firm Corporation
License No. 184-003401
123 North 15th Street
Mattoon, IL 61938
Phone: 217.235.3177
e-mail: upchurchgroup@upchurchgroup.com

USER NAME = Sta42	DESIGNED - MJS	REVISED -	
TUG PROJECT NO. 3120032-10	DRAWN - SAE	REVISED -	
PLOT SCALE = 100.0000 ' / in.	CHECKED - MJS	REVISED -	
PLOT DATE = 6/19/2023	DATE -	REVISED -	

STATE OF ILLINOIS
DEPARTMENT OF TRANSPORTATION

TRAFFIC CONTROL PLANS – STAGE 1 AIRPORT ROAD
AIRPORT ROAD OVER I–474

SCALE: 100.0000 ' / in. SHEET OF SHEETS STA. 200+00 TO STA. 215+00

F.A.I. RTE.	SECTION	COUNTY	TOTAL SHEETS	SHEET NO.
474	(72-3HB-4)BR	PEORIA	175	48
		CONTRACT NO. 68886		
	ILLINOIS	FED. AID PROJECT		

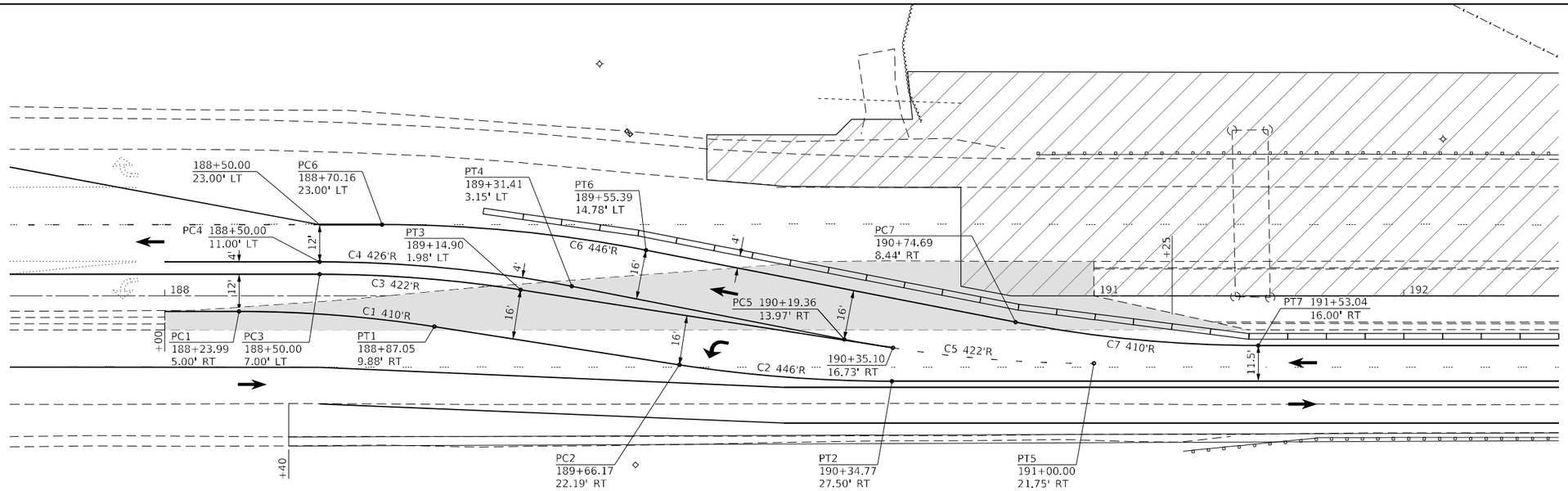

LEGEND

MEDIAN TEMPORARY PAVEMENT CONSTRUCTED IN PRESTAGE

AIRPORT ROAD SOUTH CROSSOVER PLAN – STAGE 1

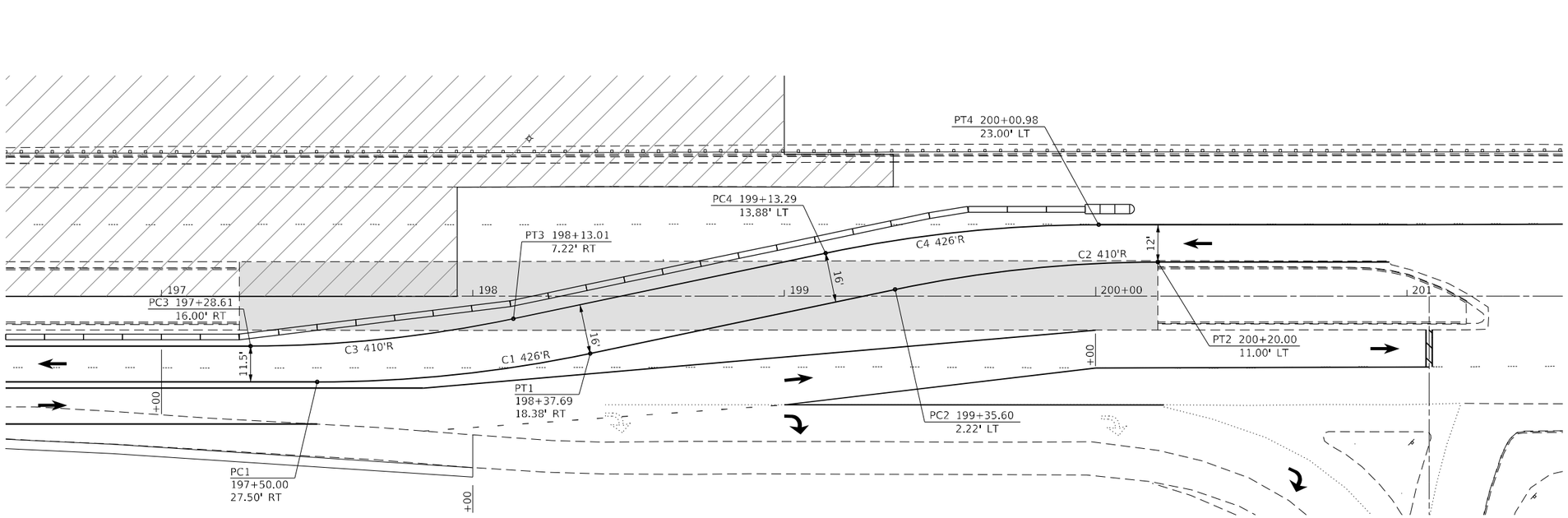

AIRPORT ROAD NORTH CROSSOVER PLAN – STAGE 1

0 20 40 60
SCALE IN FEET

The Upchurch Group architects engineers surveyors Professional Design Firm Corporation License No. 184-003-001 123 North 15th Street Mattoon, IL 61938 Phone: 217.235.3177 e-mail: upchurchgroup@upchurchgroup.com	USER NAME = Sta42	DESIGNED - MJS	REVISED -	STATE OF ILLINOIS DEPARTMENT OF TRANSPORTATION	TRAFFIC CONTROL PLANS – STAGE 1 AIRPORT ROAD AIRPORT ROAD OVER I-474	F.A.I. RTE.	SECTION	COUNTY	TOTAL SHEETS / SHEET NO.
	TUG PROJECT NO. 3120032-10	DRAWN - SAE	REVISED -			474	(72-3HB-4)BR	PEORIA	175 / 49
	PLOT SCALE = 40.0000 ' / in.	CHECKED - MJS	REVISED -					CONTRACT NO. 68886	
	PLOT DATE = 6/19/2023	DATE -	REVISED -		SCALE: 40.0000 ' / in. SHEET OF SHEETS STA. 170+00 TO STA. 200+00		ILLINOIS FED. AID PROJECT		

MODEL: Default
FILE NAME: P:\Civil_IDOT_DIST4\PTB 194-035 var PH I of 3\3120032\WO 10 Airport Road Phase 2 3120032-10\CAD Sheets\h468886-sht-staging1_Airport Crossover Detail.dgn

USE COMPONENTS FROM TCP STD. 701431

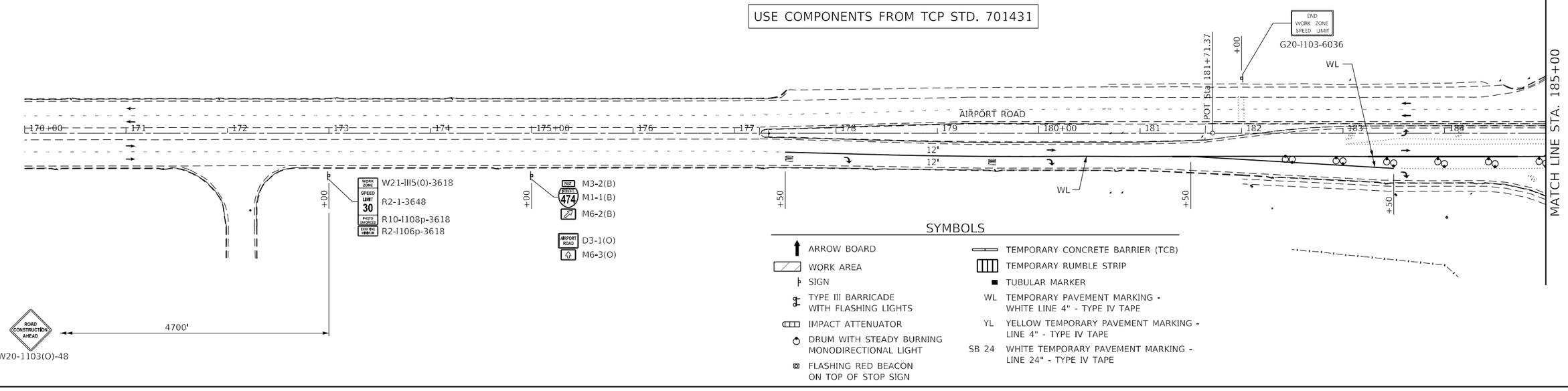

SYMBOLS

- ARROW BOARD
- WORK AREA
- SIGN
- TYPE III BARRICADE WITH FLASHING LIGHTS
- IMPACT ATTENUATOR
- DRUM WITH STEADY BURNING MONODIRECTIONAL LIGHT
- FLASHING RED BEACON ON TOP OF STOP SIGN
- TEMPORARY CONCRETE BARRIER (TCB)
- TEMPORARY RUMBLE STRIP
- TUBULAR MARKER
- WL TEMPORARY PAVEMENT MARKING - WHITE LINE 4" - TYPE IV TAPE
- YL YELLOW TEMPORARY PAVEMENT MARKING - LINE 4" - TYPE IV TAPE
- SB 24 WHITE TEMPORARY PAVEMENT MARKING - LINE 24" - TYPE IV TAPE

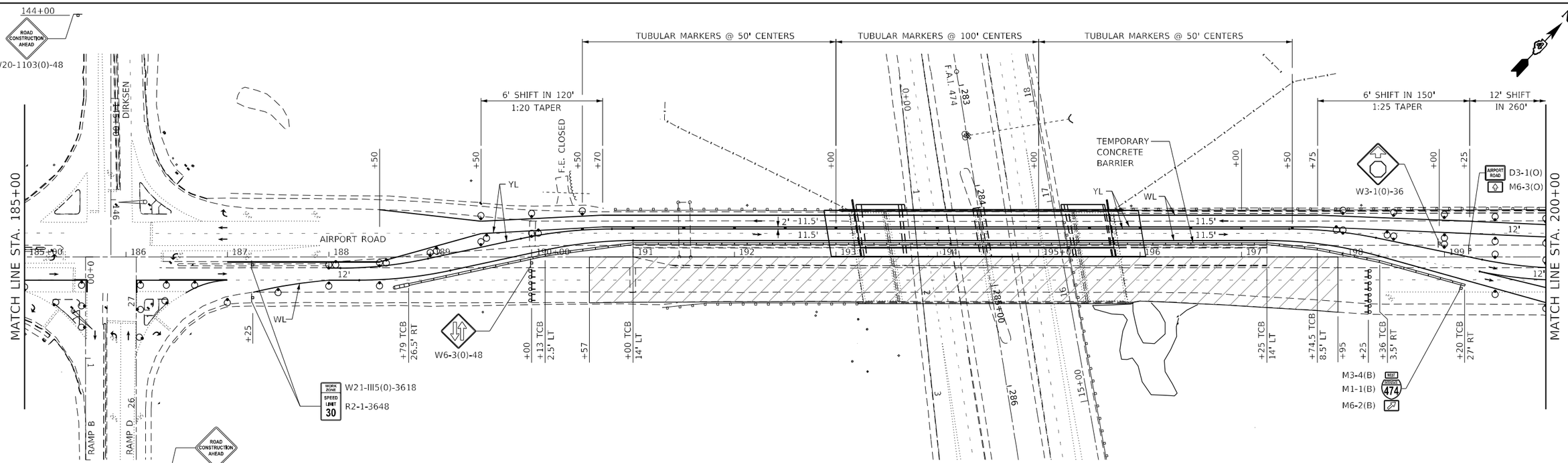

USE COMPONENTS FROM TCP STDS. 701321 AND 701431

NOTE:
FOR CROSSOVER LANE SHIFT
DETAILS SEE SHEET 49

0 50 100 150
SCALE IN FEET

MODEL: Default
FILE NAME: P:\Civil_IDOT_DIST4\PTB 194-035 var PH I-II 3120032\WO 10 Airport Road Phase 2 3120032-10\CAD Sheets\B468886-sht-staging-Airport-01.dgn

The Upchurch Group
architects engineers surveyors
Professional Design Firm Corporation
License No. 184-001001
123 North 15th Street
Mattoon, IL 61938
Phone: 217.235.3177
e-mail: upchurchgroup@upchurchgroup.com

USER NAME = Sta42	DESIGNED - MJS	REVISED -	
TUG PROJECT NO. 3120032-10	DRAWN - SAE	REVISED -	
PLOT SCALE = 100.0000 ' / in.	CHECKED - MJS	REVISED -	
PLOT DATE = 6/21/2023	DATE -	REVISED -	

STATE OF ILLINOIS
DEPARTMENT OF TRANSPORTATION

TRAFFIC CONTROL PLANS – STAGE 2 AIRPORT ROAD
AIRPORT ROAD OVER I–474

SCALE: 100.0000 ' / in. SHEET OF SHEETS STA. 170+00 TO STA. 200+00

F.A.I. RTE.	SECTION	COUNTY	TOTAL SHEETS	SHEET NO.
474	(72-3HB-4)BR	PEORIA	175	50
		CONTRACT NO. 68886		
		ILLINOIS FED. AID PROJECT		

USE COMPONENTS FROM TCP STD. 701431

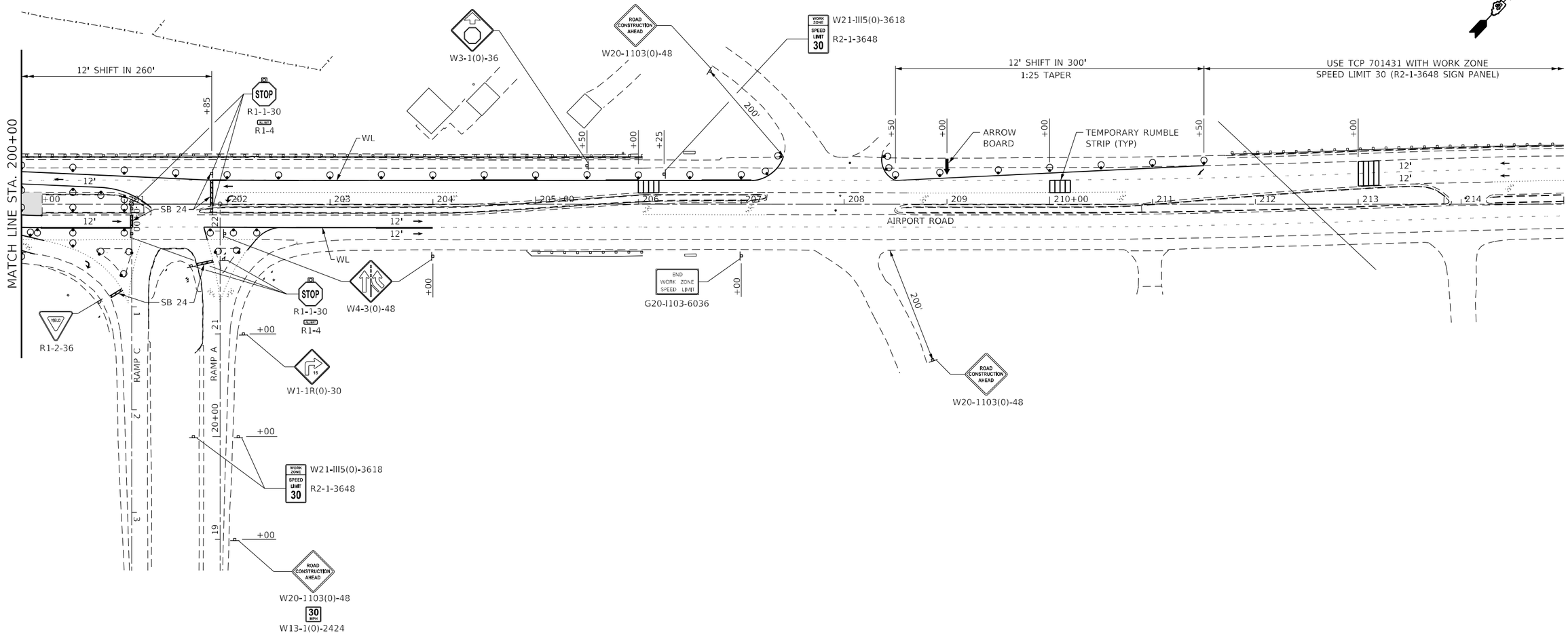

SYMBOLS

- ARROW BOARD
- WORK AREA
- SIGN
- TYPE III BARRICADE WITH FLASHING LIGHTS
- IMPACT ATTENUATOR
- DRUM WITH STEADY BURNING MONODIRECTIONAL LIGHT
- FLASHING RED BEACON ON TOP OF STOP SIGN
- TEMPORARY CONCRETE BARRIER (TCB)
- TEMPORARY RUMBLE STRIP
- TUBULAR MARKER
- WL — TEMPORARY PAVEMENT MARKING - WHITE LINE 4" - TYPE IV TAPE
- YL — YELLOW TEMPORARY PAVEMENT MARKING - LINE 4" - TYPE IV TAPE
- SB 24 — WHITE TEMPORARY PAVEMENT MARKING - LINE 24" - TYPE IV TAPE

0 50 100 150
SCALE IN FEET

MODEL: Default
FILE NAME: P:\Civil\ IDOT DISTAUPTB 194-035 var PH I-II 3120032\WO 10 Airport Road Phase 2 3120032-10\CAD Sheets\D468886-sht-staging2_Airport-02.dgn

The Upchurch Group
architects engineers surveyors
Professional Design Firm Corporation
License No. 184-003401
123 North 15th Street
Mattoon, IL 61938
Phone: 217.235.3177
e-mail: upchurchgroup@upchurchgroup.com

USER NAME = Sta42	DESIGNED - MJS	REVISED -	
TUG PROJECT NO. 3120032-10	DRAWN - SAE	REVISED -	
PLOT SCALE = 100.0000 ' / in.	CHECKED - MJS	REVISED -	
PLOT DATE = 6/19/2023	DATE -	REVISED -	

STATE OF ILLINOIS
DEPARTMENT OF TRANSPORTATION

TRAFFIC CONTROL PLANS – STAGE 2 AIRPORT ROAD
AIRPORT ROAD OVER I–474

SCALE: 100.0000 ' / in. SHEET OF SHEETS STA. 200+00 TO STA. 215+00

F.A.I. RTE.	SECTION	COUNTY	TOTAL SHEETS	SHEET NO.
474	(72-3HB-4)BR	PEORIA	175	51
		CONTRACT NO. 68886		
	ILLINOIS	FED. AID PROJECT		

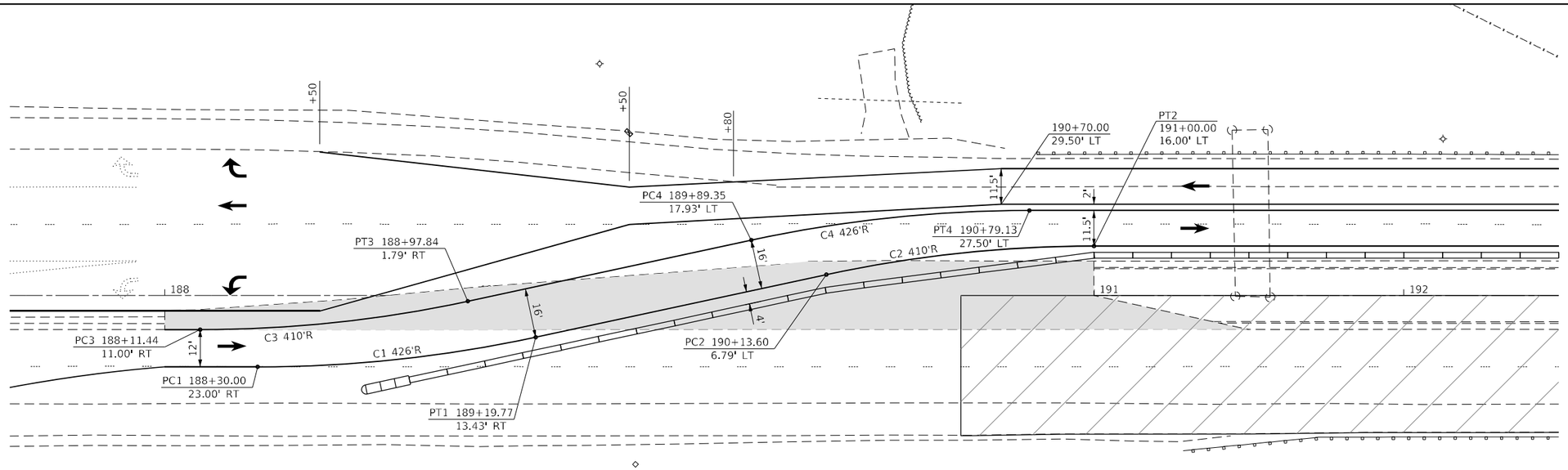

LEGEND

MEDIAN TEMPORARY PAVEMENT CONSTRUCTED IN PRESTAGE

AIRPORT ROAD SOUTH CROSSOVER PLAN – STAGE 2

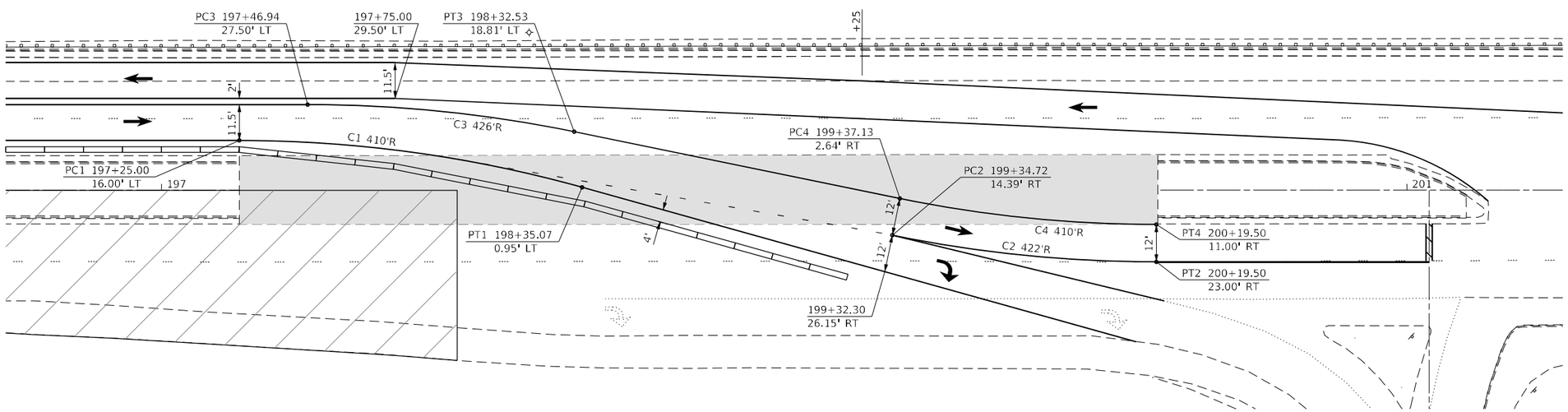

AIRPORT ROAD NORTH CROSSOVER PLAN – STAGE 2

0 20 40 60

SCALE IN FEET

MODEL: Default
FILE NAME: P:\Civil_IDOT_DIST4\PTB 194-035 var PH I of 3 3120032\WO 10 Airport Road Phase 2 3120032-10\CAD Sheets\h468886-sht-staging2_Airport Crossover Detail.dgn

The Upchurch Group
architects engineers surveyors
Professional Design Firms Corporation License No. 184-003401
123 North 15th Street Mattoon, IL 61938
Phone: 217.235.3177
e-mail: upchurchgroup@upchurchgroup.com

USER NAME = Sta42	DESIGNED - MJS	REVISED -	
TUG PROJECT NO. 3120032-10	DRAWN - SAE	REVISED -	
PLOT SCALE = 40.0000 ' / in.	CHECKED - MJS	REVISED -	
PLOT DATE = 6/21/2023	DATE -	REVISED -	

STATE OF ILLINOIS
DEPARTMENT OF TRANSPORTATION

TRAFFIC CONTROL PLANS – STAGE 2 AIRPORT ROAD
AIRPORT ROAD OVER I–474

SCALE: 40.0000 ' / in. SHEET OF SHEETS STA. 170+00 TO STA. 200+00

F.A.I. RTE.	SECTION	COUNTY	TOTAL SHEETS	SHEET NO.
474	(72-3HB-4)BR	PEORIA	175	52
		CONTRACT NO. 68886		
	ILLINOIS	FED. AID PROJECT		

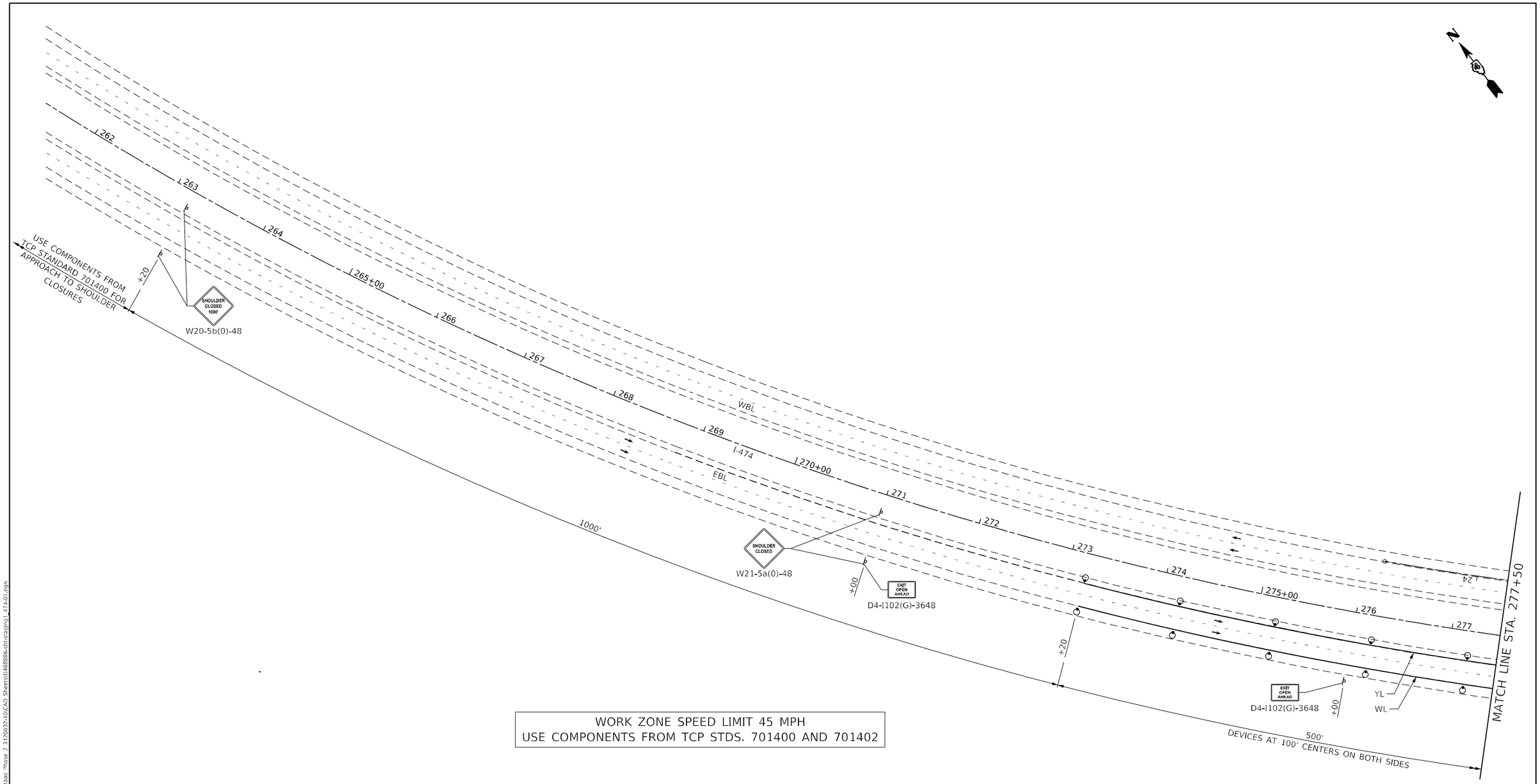

WORK ZONE SPEED LIMIT 45 MPH
USE COMPONENTS FROM TCP STDS. 701400 AND 701402

SYMBOLS

- ARROW BOARD
- WORK AREA
- SIGN
- TYPE III BARRICADE WITH FLASHING LIGHTS
- IMPACT ATTENUATOR
- DRUM WITH STEADY BURNING MONODIRECTIONAL LIGHT
- TEMPORARY CONCRETE BARRIER (TCB)
- TEMPORARY RUMBLE STRIP
- TUBULAR MARKER
- WL TEMPORARY PAVEMENT MARKING - WHITE LINE 4" - TYPE IV TAPE
- YL YELLOW TEMPORARY PAVEMENT MARKING - LINE 4" - TYPE IV TAPE
- SB 24 WHITE TEMPORARY PAVEMENT MARKING - LINE 24" - TYPE IV TAPE

0 50 100 150
SCALE IN FEET

MODEL: Default
FILE NAME: P:\CWR_IDOT_DISTAUPTB_194-035 var PH I-II 3120032\WO 10 Airport Road Phase 2 3120032-10\CAD Sheets\D468886-sht-tcp(ln)_474-01.dgn

The Upchurch Group
architects engineers surveyors
Professional Design Firm Corporation License No. 184-003-001
123 North 15th Street Mattoon, IL 61938
Phone: 217.235.3177
e-mail: upchurchgroup@upchurchgroup.com

USER NAME = Sta42	DESIGNED - MJS	REVISED -	
TUG PROJECT NO. 3120032-10	DRAWN - SAE	REVISED -	
PLOT SCALE = 100.0000 ' / in.	CHECKED - MJS	REVISED -	
PLOT DATE = 6/19/2023	DATE -	REVISED -	

STATE OF ILLINOIS
DEPARTMENT OF TRANSPORTATION

TRAFFIC CONTROL PLANS – I–474
AIRPORT ROAD OVER I–474

SCALE: 100.0000 ' / in. SHEET OF SHEETS STA. 262+00 TO STA. 277+50

F.A.I. RTE.	SECTION	COUNTY	TOTAL SHEETS	SHEET NO.
474	(72-3HB-4)BR	PEORIA	175	53

CONTRACT NO. 68886

ILLINOIS FED. AID PROJECT

RAMP ENTRANCE
USE COMPONENTS FROM TCP STD. 701411

RAMP OPEN

W21-III5(0)-3618
R2-1-3648
R10-I108p-3618
R2-I106p-3618

LANE CLOSURE TCP STANDARD 701402

DEVICES AT 25' CENTERS ON BOTH SIDES
WITH DOUBLE WHITE LINES BETWEEN LANES

DEVICES AT 25' INTERVALS ON RIGHT
AND AT 50' INTERVALS ON LEFT

MATCH LINE STA. 277+50

MATCH LINE STA. 292+50

AIRPORT ROAD

RAMP C

RAMP D

WBL

EBL

I-474

YL

WL

TEMPORARY CONCRETE BARRIER

RELOCATE EXISTING BRIDGE OH SIGN SEE SHEET 83

+15 TCB 30' LT
+20 TCB 60' LT
+45 TCB 60' LT
+52.5 TCB 30' LT
+20 TCB 74.6' LT
+77.5 TCB 28' LT
+40 TCB 28' RT
+65 TCB 60' RT
+90 TCB 30' RT & 58' RT
+65 TCB 58' RT
+27.5 TCB 30' RT

W4-3(0)-48

500'

470'
DEVICES AT 25' CENTERS ON BOTH SIDES

USE COMPONENTS FROM TCP STANDARD 701402

RAMP EXIT
USE TCP STD. 701411

SYMBOLS

- ARROW BOARD
- WORK AREA
- SIGN
- TYPE III BARRICADE WITH FLASHING LIGHTS
- IMPACT ATTENUATOR
- DRUM WITH STEADY BURNING MONODIRECTIONAL LIGHT
- TEMPORARY CONCRETE BARRIER (TCB)
- TEMPORARY RUMBLE STRIP
- TUBULAR MARKER
- WL TEMPORARY PAVEMENT MARKING - WHITE LINE 4" - TYPE IV TAPE
- YL YELLOW TEMPORARY PAVEMENT MARKING - LINE 4" - TYPE IV TAPE
- SB 24 WHITE TEMPORARY PAVEMENT MARKING - LINE 24" - TYPE IV TAPE

0 50 100 150
SCALE IN FEET

MODEL: Default
FILE NAME: P:\Civil_IDOT_DIST4\PTB 194-035 var PH I-II 3120032\WO 10 Airport Road Phase 2 3120032-10\CAD Sheets\D468886-IH-staging1_474-02.dgn

The Upchurch Group
architects engineers surveyors
Professional Design Firm Corporation License No. 184-001501
123 North 15th Street Mattoon, IL 61938
Phone: 217.235.3177
e-mail: upchurchgroup@upchurchgroup.com

USER NAME = Sta42	DESIGNED - MJS	REVISED -	
TUG PROJECT NO. 3120032-10	DRAWN - SAE	REVISED -	
PLOT SCALE = 100.0000 ' / in.	CHECKED - MJS	REVISED -	
PLOT DATE = 6/19/2023	DATE -	REVISED -	

STATE OF ILLINOIS
DEPARTMENT OF TRANSPORTATION

TRAFFIC CONTROL PLANS – I-474
AIRPORT ROAD OVER I-474

SCALE: 100.0000 ' / in. SHEET OF SHEETS STA. 277+50 TO STA. 292+50

F.A.I. RTE.	SECTION	COUNTY	TOTAL SHEETS	SHEET NO.
474	(72-3HB-4)BR	PEORIA	175	54
		CONTRACT NO. 68886		
	ILLINOIS	FED. AID PROJECT		

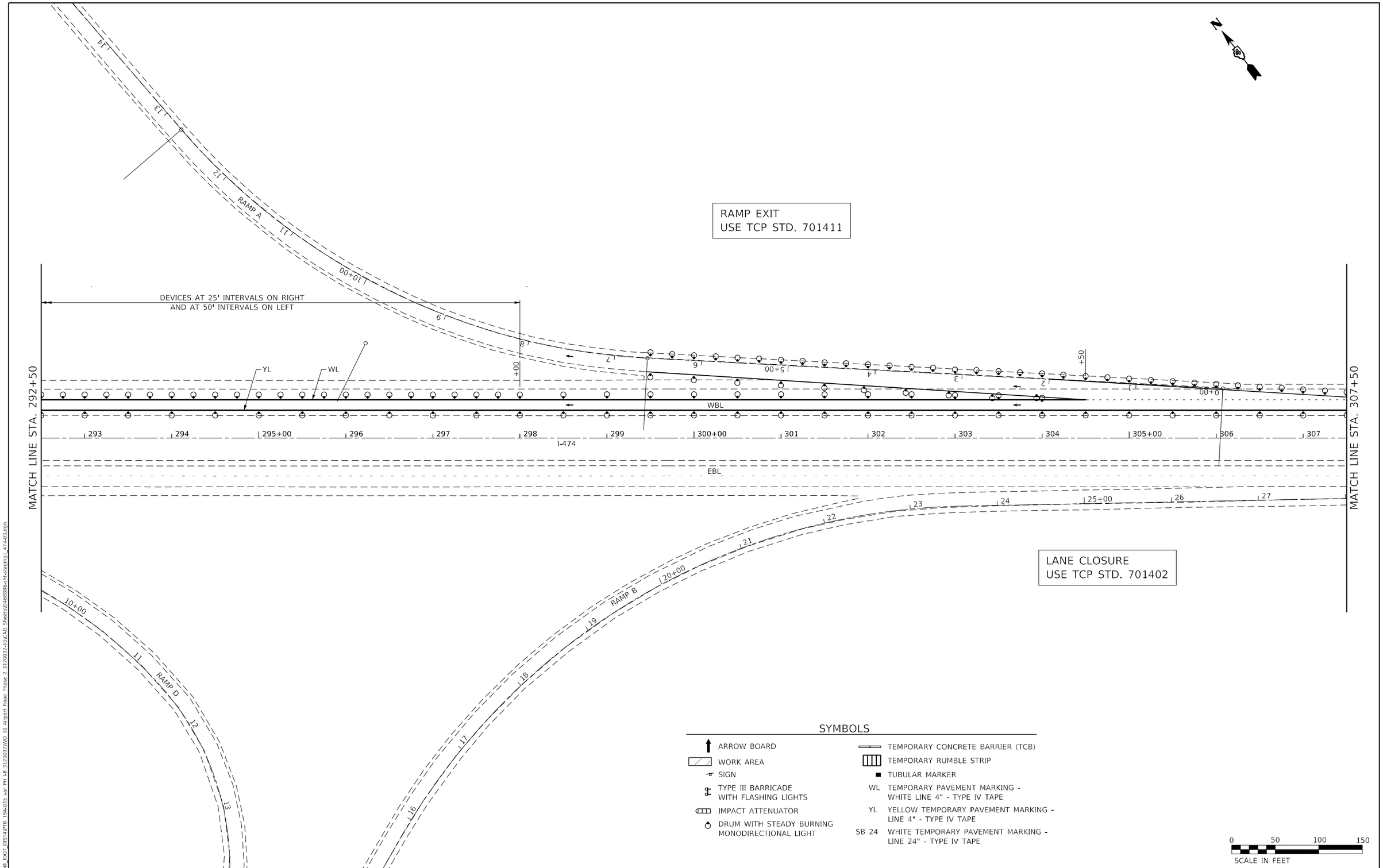

MODEL: Default
FILE NAME: P:\Civil_IDOT_DIST4\PTB 194-035 var PH I-II 3120032\WO 10 Airport Road Phase 2 3120032-10\CAD Sheets\D468886-sht-staging1_474-03.dgn

The Upchurch Group
architects engineers surveyors
Professional Design Firm Corporation License No.: 184-003-001
123 North 15th Street Mattoon, IL 61938 Phone: 217.235.3177
e-mail: upchurchgroup@upchurchgroup.com

USER NAME = Sta42	DESIGNED - MJS	REVISED -	
TUG PROJECT NO. 3120032-10	DRAWN - SAE	REVISED -	
PLOT SCALE = 100.0000 ' / in.	CHECKED - MJS	REVISED -	
PLOT DATE = 6/19/2023	DATE -	REVISED -	

STATE OF ILLINOIS
DEPARTMENT OF TRANSPORTATION

TRAFFIC CONTROL PLANS – I-474
AIRPORT ROAD OVER I-474

SCALE: 100.0000 ' / in. SHEET OF SHEETS STA. 292+50 TO STA. 307+50

F.A.I. RTE.	SECTION	COUNTY	TOTAL SHEETS	SHEET NO.
474	(72-3HB-4)BR	PEORIA	175	55
		CONTRACT NO. 68886		
	ILLINOIS	FED. AID PROJECT		

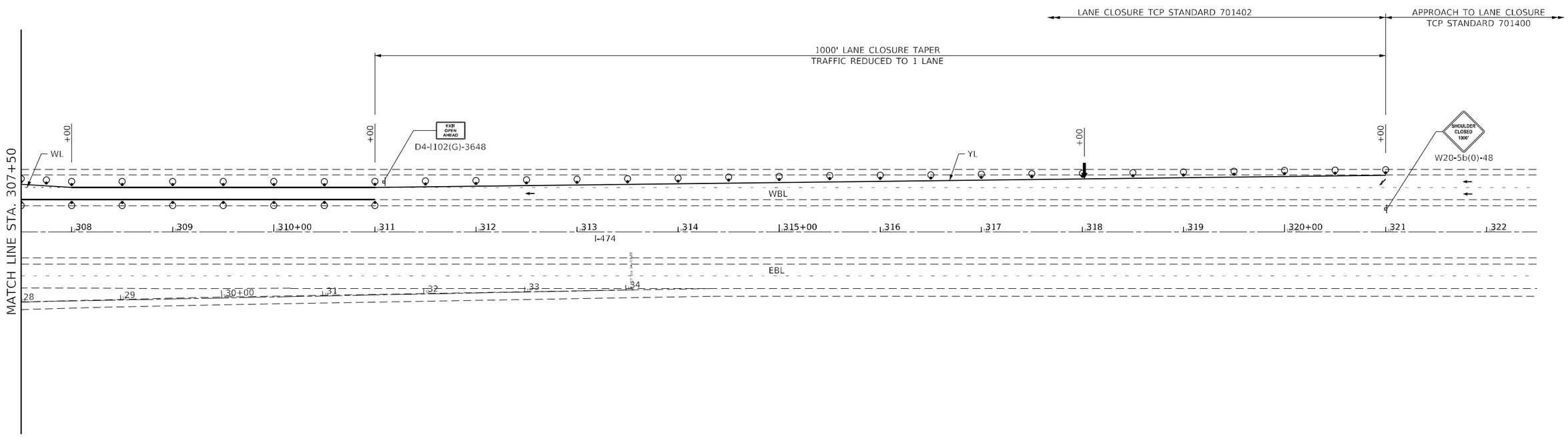

WORK ZONE SPEED LIMIT 45 MPH
USE TCP STD'S. 701400 AND 701402

SYMBOLS

- ARROW BOARD
- WORK AREA
- SIGN
- TYPE III BARRICADE WITH FLASHING LIGHTS
- IMPACT ATTENUATOR
- DRUM WITH STEADY BURNING MONODIRECTIONAL LIGHT
- TEMPORARY CONCRETE BARRIER (TCB)
- TEMPORARY RUMBLE STRIP
- TUBULAR MARKER
- WL TEMPORARY PAVEMENT MARKING - WHITE LINE 4" - TYPE IV TAPE
- YL YELLOW TEMPORARY PAVEMENT MARKING - LINE 4" - TYPE IV TAPE
- SB 24 WHITE TEMPORARY PAVEMENT MARKING - LINE 24" - TYPE IV TAPE

0 50 100 150
SCALE IN FEET

MODEL: Default
FILE NAME: P:\Civil_IDOT_DIST4\PTB 194-035 var PH I-II 3120032\WO 10 Airport Road Phase 2 3120032-10\CAD Sheets\D468886-sht-staging1_474-04.dgn

The Upchurch Group
architects engineers surveyors
Professional Design Firm Corporation License No. : 184-003-001
123 North 15th Street
Mattoon, IL 61938
Phone: 217.253.3177
e-mail: upchurchgroup@upchurchgroup.com

USER NAME = Sta42	DESIGNED - MJS	REVISED -	
TUG PROJECT NO. 3120032-10	DRAWN - SAE	REVISED -	
PLOT SCALE = 100.0000 ' / in.	CHECKED - MJS	REVISED -	
PLOT DATE = 6/19/2023	DATE -	REVISED -	

STATE OF ILLINOIS
DEPARTMENT OF TRANSPORTATION

TRAFFIC CONTROL PLANS – I-474
AIRPORT ROAD OVER I-474

SCALE: 100.0000 ' / in. SHEET OF SHEETS STA. 307+50 TO STA. 322+50

F.A.I. RTE.	SECTION	COUNTY	TOTAL SHEETS	SHEET NO.
474	(72-3HB-4)BR	PEORIA	175	56
		CONTRACT NO. 68886		
	ILLINOIS	FED. AID PROJECT		

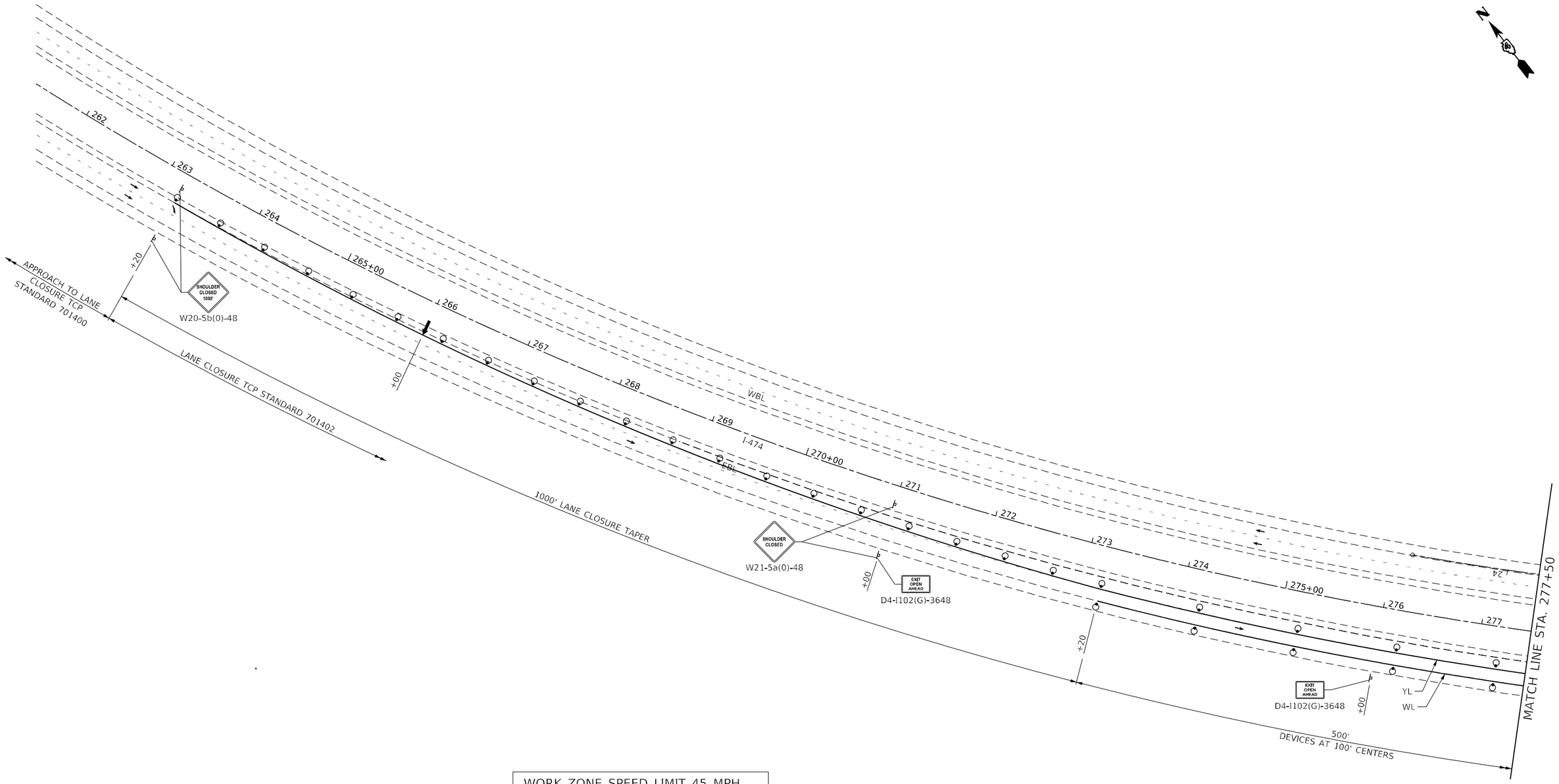

WORK ZONE SPEED LIMIT 45 MPH
USE TCP STDS. 701400 AND 701402

SYMBOLS

- ARROW BOARD
- WORK AREA
- SIGN
- TYPE III BARRICADE WITH FLASHING LIGHTS
- IMPACT ATTENUATOR
- DRUM WITH STEADY BURNING MONODIRECTIONAL LIGHT
- TEMPORARY CONCRETE BARRIER (TCB)
- TEMPORARY RUMBLE STRIP
- TUBULAR MARKER
- WL TEMPORARY PAVEMENT MARKING - WHITE LINE 4" - TYPE IV TAPE
- YL YELLOW TEMPORARY PAVEMENT MARKING - LINE 4" - TYPE IV TAPE
- SB 24 WHITE TEMPORARY PAVEMENT MARKING - LINE 24" - TYPE IV TAPE

0 50 100 150
SCALE IN FEET

MODEL: Default
FILE NAME: P:\Civil_IDOT_DIST4\PTB_194-035_var PH I-II_3120032\WO 10 Airport Road Phase 2 3120032-10\CAD Sheets\D468886-sht-staging2_474-0.dgn

The Upchurch Group
architects engineers surveyors
Professional Design Firms Corporation License No. 184-001401
123 North 15th Street Mattoon, IL 61938 Phone: 217.235.3177
e-mail: upchurchgroup@upchurchgroup.com

USER NAME = Sta42	DESIGNED - MJS	REVISED -	
TUG PROJECT NO. 3120032-10	DRAWN - SAE	REVISED -	
PLOT SCALE = 100.0000 ' / in.	CHECKED - MJS	REVISED -	
PLOT DATE = 6/19/2023	DATE -	REVISED -	

STATE OF ILLINOIS
DEPARTMENT OF TRANSPORTATION

TRAFFIC CONTROL PLANS – I-474 BEAM REPLACEMENT
AIRPORT ROAD OVER I-474

SCALE: 100.0000 ' / in. SHEET OF SHEETS STA. 262+00 TO STA. 277+50

F.A.I. RTE.	SECTION	COUNTY	TOTAL SHEETS	SHEET NO.
474	(72-3HB-4)BR	PEORIA	175	57
		CONTRACT NO. 68886		
	ILLINOIS	FED. AID PROJECT		

RAMP CLOSED NIGHTTIME ONLY-
SEE SPECIAL PROVISIONS

RAMP CLOSED
USE TCP STD. 701451

LANE CLOSURE TCP STANDARD 701402

DEVICES AT 25' CENTERS ON BOTH SIDES

DEVICES AT 25' INTERVALS ON RIGHT
AND AT 50' INTERVALS ON LEFT

MATCH LINE STA. 277+50

MATCH LINE STA. 292+50

AIRPORT ROAD

RAMP C

RAMP D

WBL

EBL

YL

WL

I-474

TEMPORARY
CONCRETE
BARRIER

RELOCATE EXISTING
BRIDGE OH SIGN
SEE SHEET 83

+15 TCB 42' LT
+20 TCB 60' LT
+45 TCB 60' LT
+52.5 TCB 42' LT
+20 TCB 74.6' LT
+77.5 TCB 28' LT
+40 TCB 28' RT
+65 TCB 60' RT
+90 TCB 42' RT & 58' RT
+65 TCB 58' RT
+27.5 TCB 42' RT

500'

470'

RAMP EXIT
USE TCP STD. 701411

SYMBOLS

- ARROW BOARD
- WORK AREA
- SIGN
- TYPE III BARRICADE WITH FLASHING LIGHTS
- IMPACT ATTENUATOR
- DRUM WITH STEADY BURNING MONODIRECTIONAL LIGHT
- TEMPORARY CONCRETE BARRIER (TCB)
- TEMPORARY RUMBLE STRIP
- TUBULAR MARKER
- WL TEMPORARY PAVEMENT MARKING - WHITE LINE 4" - TYPE IV TAPE
- YL YELLOW TEMPORARY PAVEMENT MARKING - LINE 4" - TYPE IV TAPE
- SB 24 WHITE TEMPORARY PAVEMENT MARKING - LINE 24" - TYPE IV TAPE

NOTE: SEE DETOUR PLANS AND SPECIAL
PROVISIONS FOR NIGHTTIME FULL CLOSURE.

0 50 100 150
SCALE IN FEET

MODEL: Default
FILE NAME: P:\Civil_IDOT_DIST4\PTB 194-035 var PH I-II 3120032\WO 10 Airport Road Phase 2 3120032-10\CAD Sheets\D468886-sht-staging2_474-02.dgn

The Upchurch Group
architects engineers surveyors
Professional Design Firm Corporation License No. : 184-003-001
123 North 15th Street Mattoon, IL 61938 Phone: 217.253.3177
e-mail: upchurchgroup@upchurchgroup.com

USER NAME = Sta42	DESIGNED - MJS	REVISED -
TUG PROJECT NO. 3120032-10	DRAWN - SAE	REVISED -
PLOT SCALE = 100.0000 ' / in.	CHECKED - MJS	REVISED -
PLOT DATE = 6/19/2023	DATE -	REVISED -

STATE OF ILLINOIS
DEPARTMENT OF TRANSPORTATION

TRAFFIC CONTROL PLANS – I-474 BEAM REPLACEMENT
AIRPORT ROAD OVER I-474

SCALE: 100.0000 ' / in. SHEET OF SHEETS STA. 277+50 TO STA. 292+50

F.A.I. RTE.	SECTION	COUNTY	TOTAL SHEETS	SHEET NO.
474	(72-3HB-4)BR	PEORIA	175	58
		CONTRACT NO. 68886		
		ILLINOIS FED. AID PROJECT		

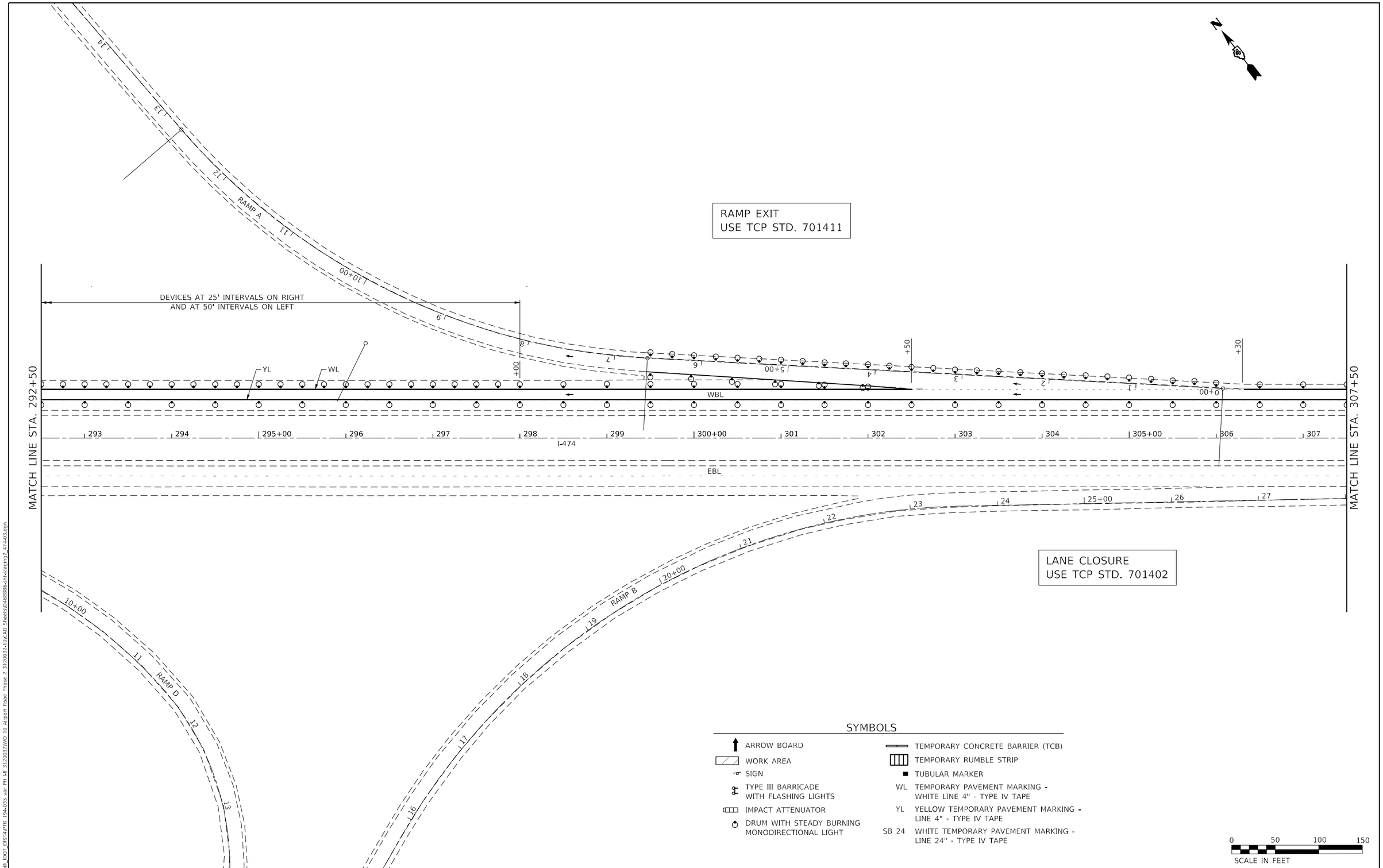

MODEL: Default
FILE NAME: P:\Civil_IDOT_DIST4\PTB 194-035 var PH I-II 3120032\WO 10 Airport Road Phase 2 3120032-10\CAD Sheets\D468886-sht-staging2_474-03.dgn

The Upchurch Group
architects engineers surveyors
Professional Design Firm Corporation License No. 184-000-001
123 North 15th Street Mattoon, IL 61938 Phone: 217.235.3177
e-mail: upchurchgroup@upchurchgroup.com

USER NAME = Sta42	DESIGNED - MJS	REVISED -
TUG PROJECT NO. 3120032-10	DRAWN - SAE	REVISED -
PLOT SCALE = 100.0000 ' / in.	CHECKED - MJS	REVISED -
PLOT DATE = 6/19/2023	DATE -	REVISED -

STATE OF ILLINOIS
DEPARTMENT OF TRANSPORTATION

TRAFFIC CONTROL PLANS – I-474 BEAM REPLACEMENT
AIRPORT ROAD OVER I-474

SCALE: 100.0000 ' / in. SHEET OF SHEETS STA. 292+50 TO STA. 307+50

F.A.I. RTE.	SECTION	COUNTY	TOTAL SHEETS	SHEET NO.
474	(72-3HB-4)BR	PEORIA	175	59
		CONTRACT NO. 68886		
	ILLINOIS	FED. AID PROJECT		

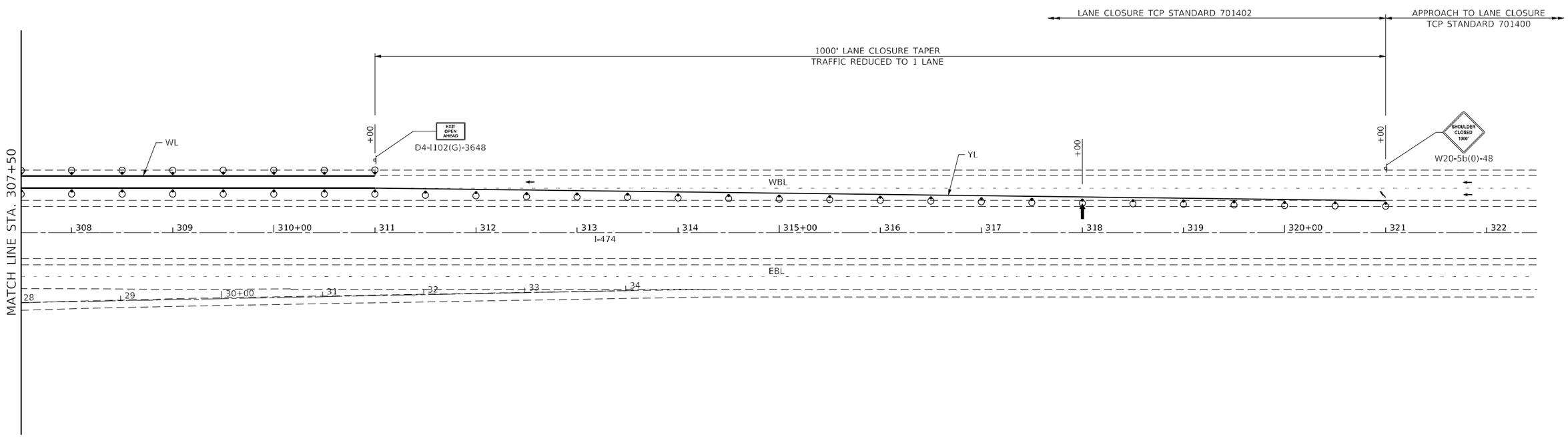

WORK ZONE SPEED LIMIT 45 MPH
USE TCP STD'S. 701400 AND 701402

SYMBOLS

- ARROW BOARD
- WORK AREA
- SIGN
- TYPE III BARRICADE WITH FLASHING LIGHTS
- IMPACT ATTENUATOR
- DRUM WITH STEADY BURNING MONODIRECTIONAL LIGHT
- TEMPORARY CONCRETE BARRIER (TCB)
- TEMPORARY RUMBLE STRIP
- TUBULAR MARKER
- WL TEMPORARY PAVEMENT MARKING - WHITE LINE 4" - TYPE IV TAPE
- YL YELLOW TEMPORARY PAVEMENT MARKING - LINE 4" - TYPE IV TAPE
- SB 24 WHITE TEMPORARY PAVEMENT MARKING - LINE 24" - TYPE IV TAPE

0 50 100 150
SCALE IN FEET

The Upchurch Group
architects engineers surveyors
Professional Design Firm Corporation License No. 184-003-001
123 North 15th Street
Mattoon, IL 61938
Phone: 217.235.3177
e-mail: upchurchgroup@upchurchgroup.com

USER NAME = Sta42	DESIGNED - MJS	REVISED -
TUG PROJECT NO. 3120032-10	DRAWN - SAE	REVISED -
PLOT SCALE = 100.0000 ' / in.	CHECKED - MJS	REVISED -
PLOT DATE = 6/19/2023	DATE -	REVISED -

STATE OF ILLINOIS
DEPARTMENT OF TRANSPORTATION

TRAFFIC CONTROL PLANS – I-474 BEAM REPLACEMENT
AIRPORT ROAD OVER I-474

SCALE: 100.0000 ' / in. SHEET OF SHEETS STA. 307+50 TO STA. 322+50

F.A.I. RTE.	SECTION	COUNTY	TOTAL SHEETS	SHEET NO.
474	(72-3HB-4)BR	PEORIA	175	60

CONTRACT NO. 68886

ILLINOIS | FED. AID PROJECT

MODEL: Default
FILE NAME: P:\Civil_IDOT_DIST4\PTB 194-035 var PH I-II 3120032\WO 10 Airport Road Phase 2 3120032-10\CAD Sheets\0468886-sht-staging2_474-04.dgn

EB I-474 CLOSURE FOR BEAM REMOVAL/SETTING

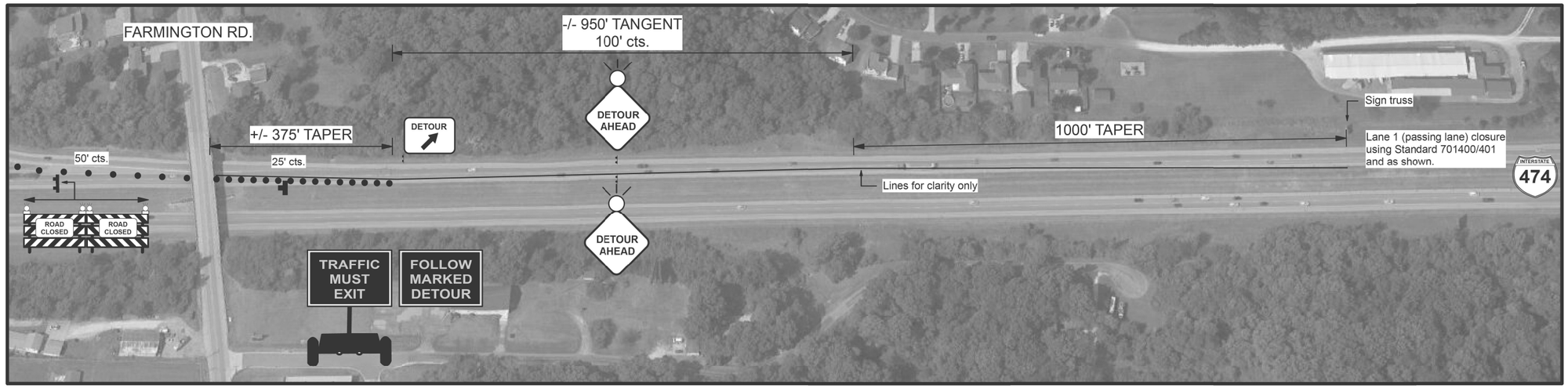

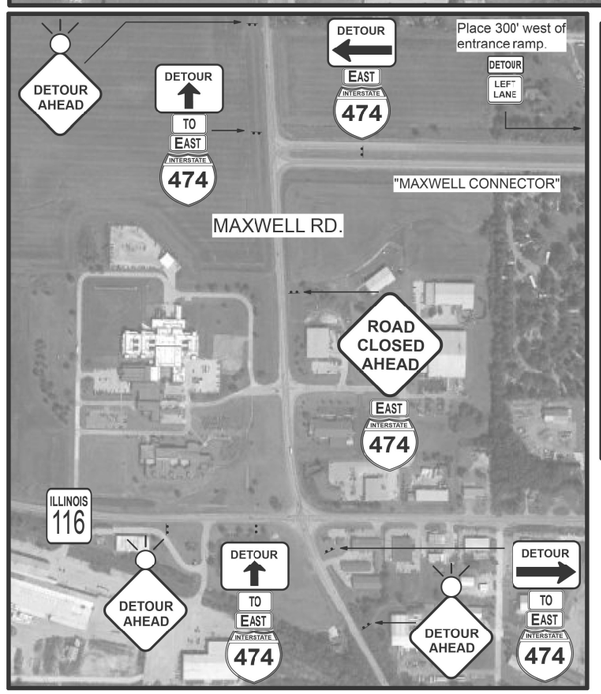

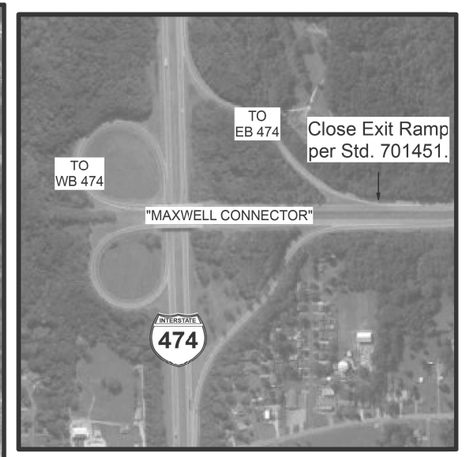

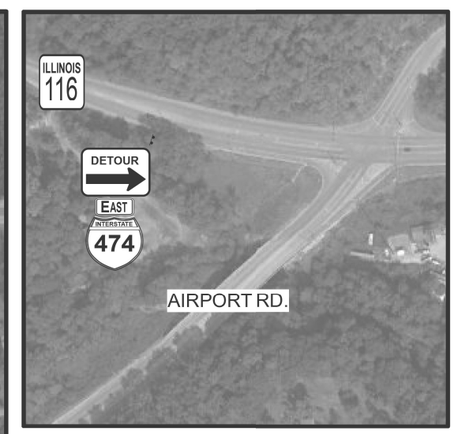

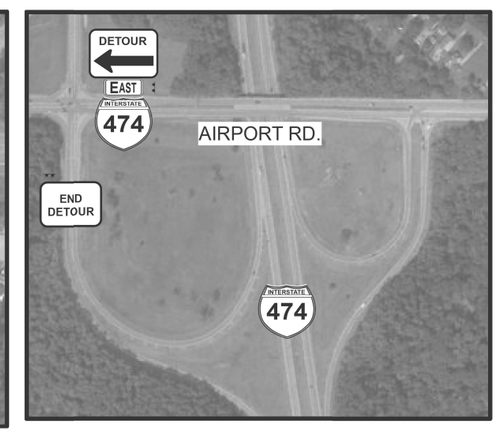

DETOUR (TYP.)	BLACK ON ORANGE 30X24	LEFT LANE	BLACK ON WHITE 24X18
DETOUR	BLACK ON ORANGE 24X12		FLASHING MONO-DIRECTIONAL LIGHT
TO	WHITE ON BLUE 24X12		DRUM/BARREL WITH STEADY-BURN MONO-DIRECTIONAL LIGHT
EAST	WHITE ON BLUE 24X12		
INTERSTATE 474	EXISTING COLORS 24X24		

ALL SIGNS MAY BE STAND MOUNTED.

PLACE 1 MILE EAST OF THE ADVANCED 3 MILE MESSAGE BOARD.

MODEL: Default
FILE NAME: P:\Civil\IDOT DISTAIPTB 194-035 var PH I-II 3120032\WO 10 Airport Road Phase 2 3120032-10\CAD Sheets\0468886-sht-staging I474 WB closure.dgn

The Upchurch Group
architects engineers surveyors
Professional Design Firm Corporation License No. 184-003401
123 North 15th Street Mattoon, IL 61938 Phone: 217.235.3177
e-mail: upchurchgroup@upchurchgroup.com

USER NAME = Sta42	DESIGNED - MJS	REVISED -
TUG PROJECT NO. 3120032-10	DRAWN -	REVISED -
PLOT SCALE = 100.0000 ' / in.	CHECKED - MJS	REVISED -
PLOT DATE = 6/19/2023	DATE -	REVISED -

STATE OF ILLINOIS
DEPARTMENT OF TRANSPORTATION

TRAFFIC CONTROL PLAN – I-474 BEAM REPLACEMENT
AIRPORT ROAD OVER I-474

SCALE: n.SHEET OF SHEETS STA. TO STA.

F.A.I. RTE.	SECTION	COUNTY	TOTAL SHEETS	SHEET NO.
474	(72-3HB-4)BR	PEORIA	175	61
		CONTRACT NO. 68886		
	ILLINOIS	FED. AID PROJECT		

WB I-474 CLOSURE FOR BEAM REMOVAL/SETTING

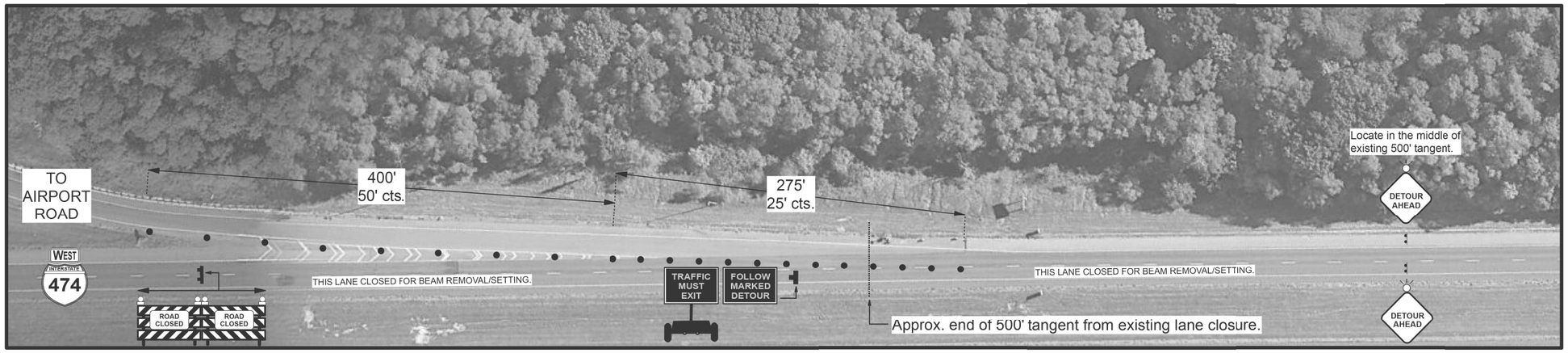

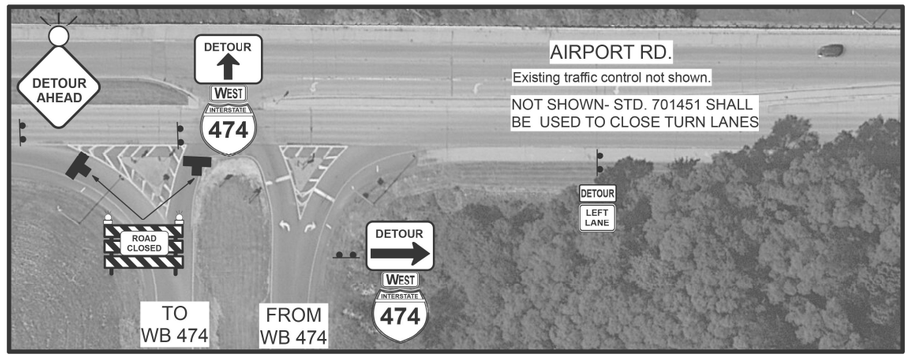

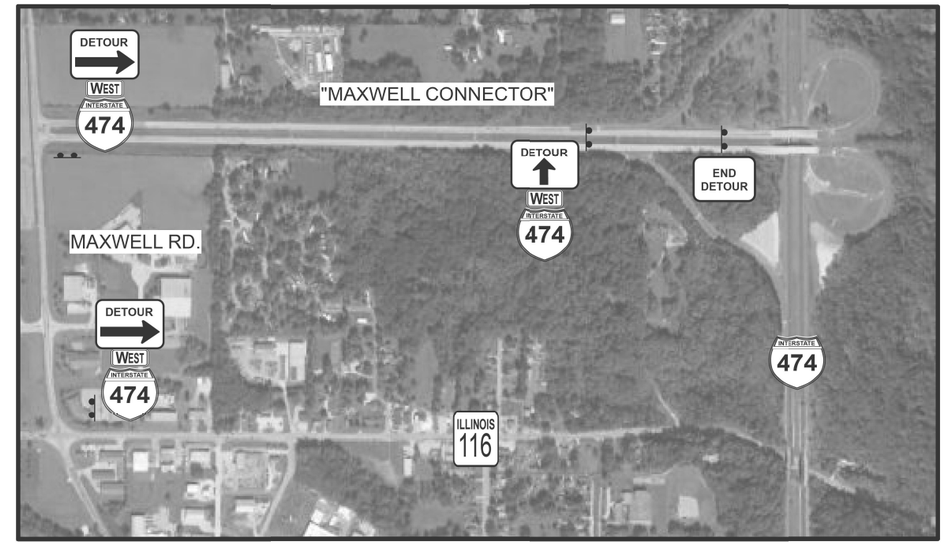

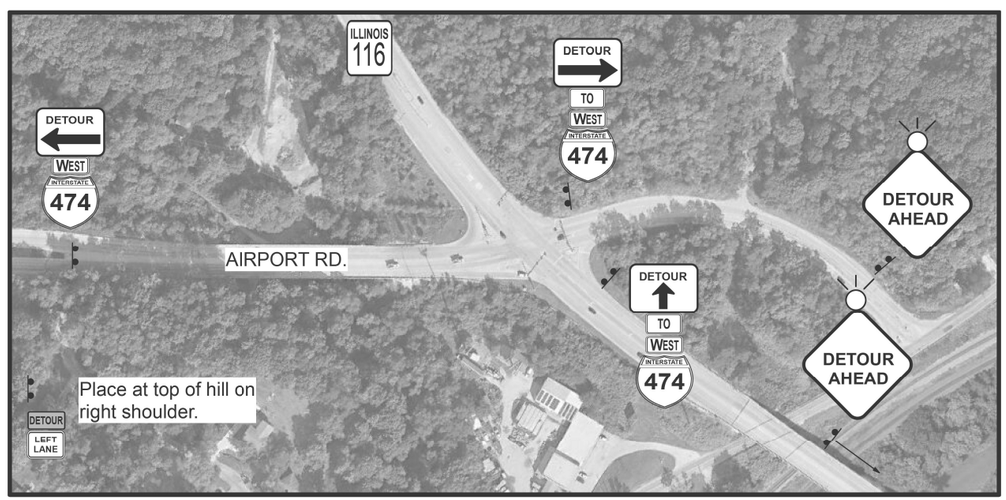

DETOUR (TYP.)	BLACK ON ORANGE 30X24	LEFT LANE	BLACK ON WHITE 24X18
DETOUR	BLACK ON ORANGE 24X12		FLASHING MONO-DIRECTIONAL LIGHT
TO	WHITE ON BLUE 24X12		DRUM/BARREL WITH STEADY-BURN MONO-DIRECTIONAL LIGHT
WEST	WHITE ON BLUE 24X12		
INTERSTATE 474	EXISTING COLORS 24X24		

ALL SIGNS MAY BE STAND MOUNTED.

PLACE 1 MILE WEST OF THE ADVANCED 3 MILE MESSAGE BOARD.

MODEL: Default
FILE NAME: P:\Civil\IDOT DIST4\PTB 194-035 var PH I-II 3120032\WO 10 Airport Road Phase 2 3120032-10\CAD Sheets\D468886-sht-staging I474 WB closure.dgn

The Upchurch Group
architects engineers surveyors
Professional Design Firms Corporation License No. 184-001401
123 North 15th Street Mattoon, IL 61938 Phone: 217.235.3177
e-mail: upchurchgroup@upchurchgroup.com

USER NAME = Sta42	DESIGNED - MJS	REVISED -	
TUG PROJECT NO. 3120032-10	DRAWN -	REVISED -	
PLOT SCALE = 100.0000 ' / in.	CHECKED - MJS	REVISED -	
PLOT DATE = 6/19/2023	DATE -	REVISED -	

STATE OF ILLINOIS
DEPARTMENT OF TRANSPORTATION

TRAFFIC CONTROL PLAN – I-474 BEAM REPLACEMENT
AIRPORT ROAD OVER I-474

SCALE: h.SHEET OF SHEETS STA. TO STA.

F.A.I. RTE.	SECTION	COUNTY	TOTAL SHEETS	SHEET NO.
474	(72-3HB-4)BR	PEORIA	175	62
		CONTRACT NO. 68886		
	ILLINOIS	FED. AID PROJECT		

INTERSTATE TRAFFIC STOPS

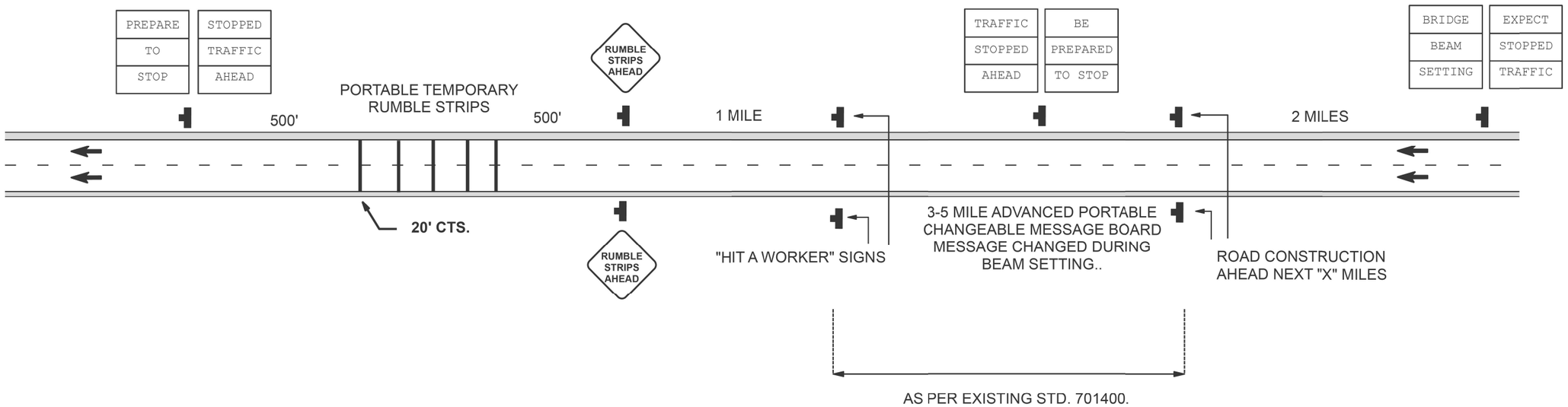

TEMPORARY RUMBLE STRIPS SHALL BE PLACED AFTER ALL SIGNAGE IS IN PLACE AND REMOVED PRIOR TO ALL SIGN REMOVAL.

CONTRACTOR SHALL NOTIFY IDOT TWO WEEKS PRIOR TO ARRANGE ISP TROOPER FOR DELAYS. THE TROOPER WILL STAY IN ADVANCE OF THE TRAFFIC QUEUE AND SHALL NOT BE POSITIONED NEAR THE FLAGGER.

FULL CLOSURE OF ONE DIRECTION SHALL BE LIMITED TO 20 MINUTES. ADDITIONAL CLOSURES SHALL RESUME WHEN DELAYED TRAFFIC HAS CLEARED.

CLOSURES SHALL BE DONE AT NIGHT FROM 10:00 PM TO 6:00 AM-MONDAY THRU THURSDAY. NIGHT WORK WILL REQUIRE LIGHTING PER IDOT SPECIFICATIONS

FOR NIGHTTIME WORK ZONE LIGHTING. NO ADDITIONAL COMPENSATION SHALL BE ALLOWED FOR NIGHTTIME WORK ZONE LIGHTING UNLESS SPECIFIED IN CONTRACT PLANS..

SATURDAY/SUNDAY- NO DAY OR NIGHT CLOSURES ALLOWED.

ALL COSTS ASSOCIATED WITH THIS DETAIL SHALL BE INCLUDED WITH TRAFFIC CONTROL AND PROTECTION STANDARD 701400.

MODEL: Default
FILE NAME: P:\Civil_IDOT_DIST4\PTB 194-035 var PH I,II 3120032\WO 10 Airport Road Phase 2 3120032-10\CAD Sheets\D468886-sht-staging traffic stops.dgn

The Upchurch Group
architects engineers surveyors
Professional Design Firm Corporation License No. 184-001401
123 North 19th Street Mattoon, IL 61938 Phone: 217.235.3177
e-mail: upchurchgroup@upchurchgroup.com

USER NAME = Sta42	DESIGNED - MJS	REVISED -
TUG PROJECT NO. 3120032-10	DRAWN -	REVISED -
PLOT SCALE = 100.0000 ' / in.	CHECKED - MJS	REVISED -
PLOT DATE = 6/19/2023	DATE -	REVISED -

STATE OF ILLINOIS
DEPARTMENT OF TRANSPORTATION

TRAFFIC CONTROL PLAN – I-474 BEAM REPLACEMENT
AIRPORT ROAD OVER I-474

SCALE: ' / in. SHEET OF SHEETS STA. TO STA.

F.A.I. RTE.	SECTION	COUNTY	TOTAL SHEETS	SHEET NO.
474	(72-3HB-4)BR	PEORIA	175	63

CONTRACT NO. 68886

ILLINOIS FED. AID PROJECT

NOTES

ALL SEEDED AREAS SHALL INCLUDE A 6" MINIMUM LIFT OF TOPSOIL.

LEGEND

- SEEDING, CLASS 2
- SEEDING, CLASS 3A
- RIPRAP

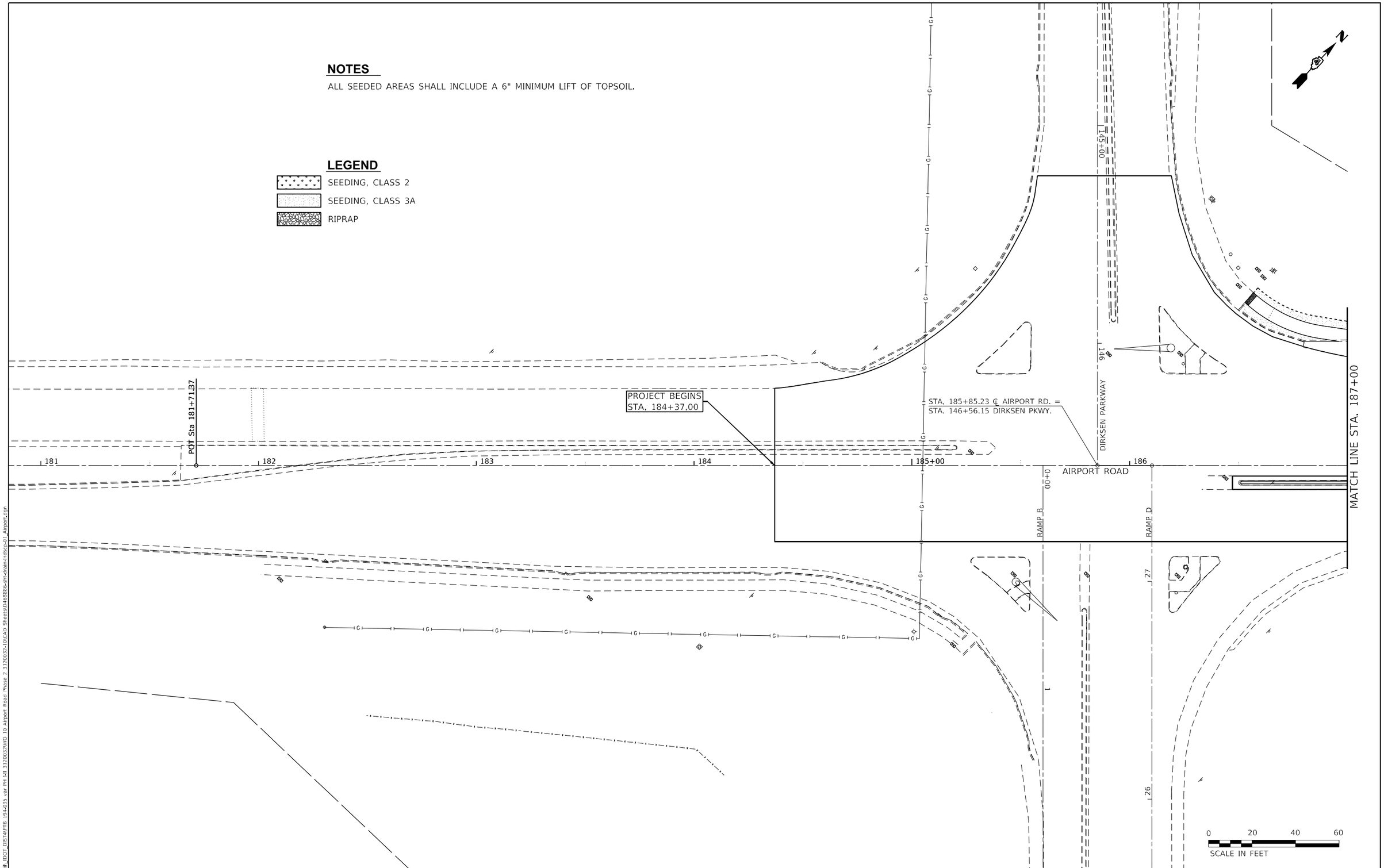

MODEL: Default
FILE NAME: P:\Civil_IDOT\DIST4\PTB 194-033 var PH I-II 3120032\WO 10 Airport Road Phase 2 3120032-10\CAD Sheets\D468886-sht-drainlndscp-01 Airport.dgn

The Upchurch Group
architects engineers surveyors
Professional Design Firm Corporation
License No. 184-003-001
123 North 15th Street
Mattoon, IL 61938
Phone: 217.235.3177
e-mail: upchurchgroup@upchurchgroup.com

USER NAME = Sta42	DESIGNED - MJS	REVISED -	
TUG PROJECT NO. 3120032-10	DRAWN -	REVISED -	
PLOT SCALE = 40.0000 ' / in.	CHECKED - MJS	REVISED -	
PLOT DATE = 6/19/2023	DATE -	REVISED -	

STATE OF ILLINOIS
DEPARTMENT OF TRANSPORTATION

DRAINGE AND LANDSCAPE PLANS
AIRPORT ROAD OVER I-474

SCALE: 40.0000 ' / in. SHEET 1 OF 4 SHEETS STA. 184+37 TO STA. 187+00

F.A.I. RTE.	SECTION	COUNTY	TOTAL SHEETS	SHEET NO.
474	(72-3HB-4)BR	PEORIA	175	64
		CONTRACT NO. 68886		
	ILLINOIS	FED. AID PROJECT		

NOTES

ALL SEEDED AREAS SHALL INCLUDE A 6" MINIMUM LIFT OF TOPSOIL.

LEGEND

- SEEDING, CLASS 2
- SEEDING, CLASS 3A
- RIPRAP

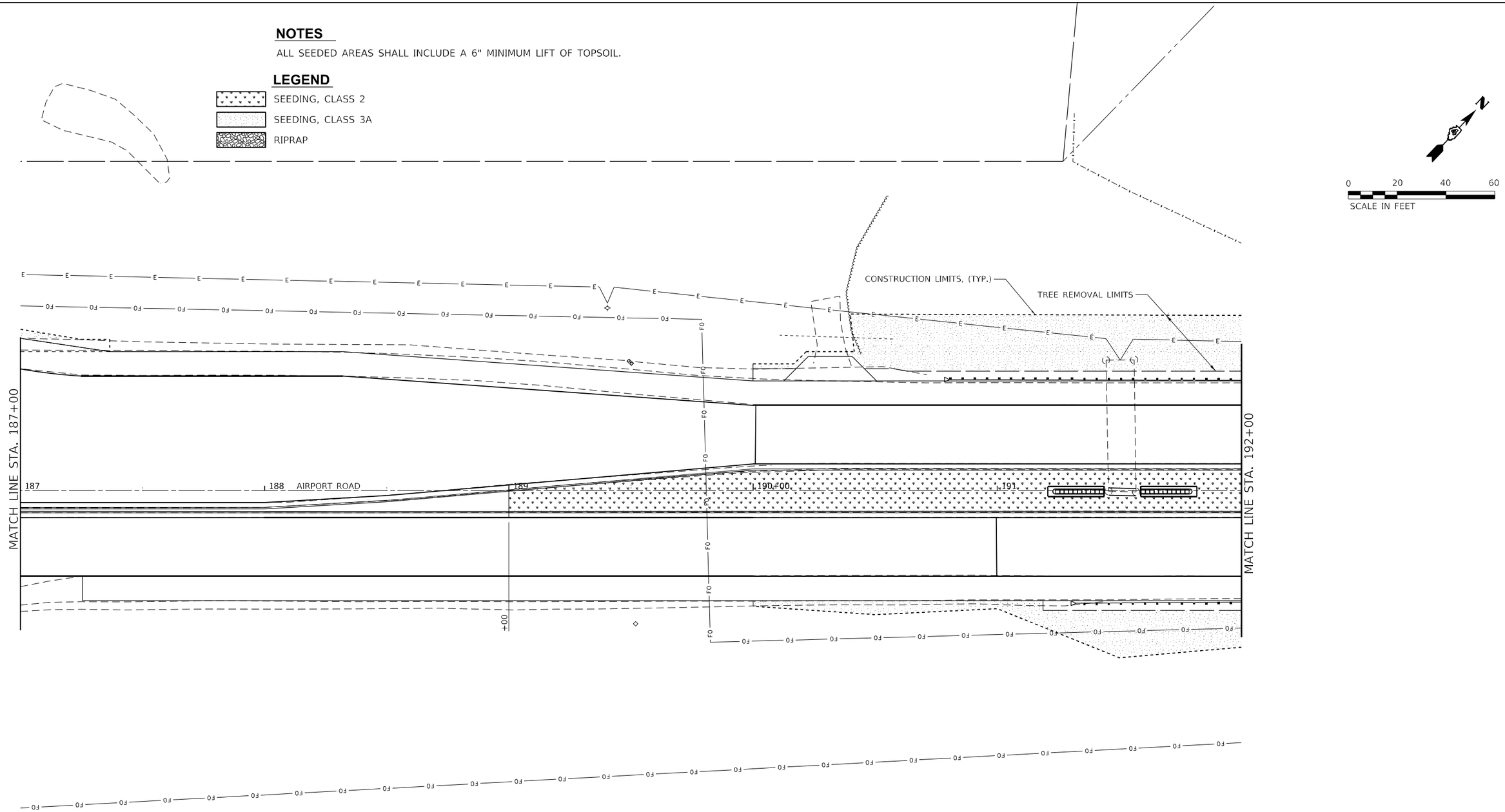

MODEL: Default
FILE NAME: P:\Civil_IDOT_DIST4\PTB_194-035_var PH I-II 3120032\WO 10 Airport Road Phase 2 3120032-10\CAD Sheets\D1488886-sht-drain-hydsc-02 Airport.dgn

The Upchurch Group
architects engineers surveyors
Professional Design Firm Corporation License No. 184-001001
123 North 15th Street Mattoon, IL 61938 Phone: 217.235.3177
e-mail: upchurchgroup@upchurchgroup.com

USER NAME = Sta42	DESIGNED - MJS	REVISED -
TUG PROJECT NO. 3120032-10	DRAWN -	REVISED -
PLOT SCALE = 40.0000 ' / in.	CHECKED - MJS	REVISED -
PLOT DATE = 6/19/2023	DATE -	REVISED -

STATE OF ILLINOIS
DEPARTMENT OF TRANSPORTATION

DRAINAGE AND LANDSCAPE PLANS
AIRPORT ROAD OVER I-474

SCALE: 40.0000 ' / in. SHEET 2 OF 4 SHEETS STA. 192+00 TO STA. 198+00

F.A.I. RTE.	SECTION	COUNTY	TOTAL SHEETS	SHEET NO.
474	(72-3HB-4)BR	PEORIA	175	65

CONTRACT NO. 68886

ILLINOIS FED. AID PROJECT

NOTES

ALL SEEDED AREAS SHALL INCLUDE A 6" MINIMUM LIFT OF TOPSOIL.

LEGEND

- SEEDING, CLASS 2
- SEEDING, CLASS 3A
- RIPRAP

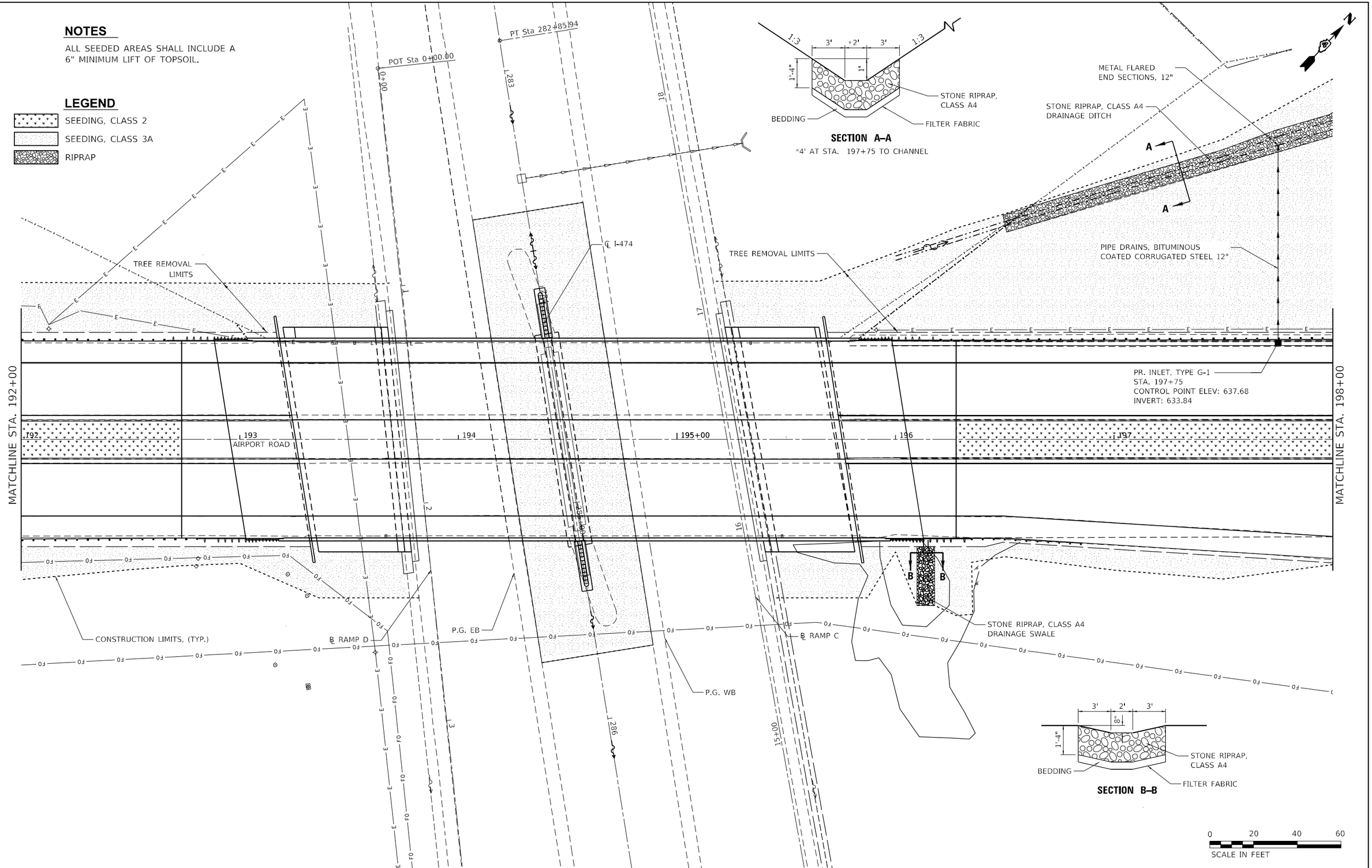

MODEL: Default
FILE NAME: P:\Civil\IDOT DIST4\PTB 194-035 var PH I-II 3120032\WO 10 Airport Road, Phase 2 3120032-10\CAD Sheets\0468886-sht-drain-hdscp-03 Airport.dgn

The Upchurch Group architects engineers surveyors	USER NAME = Sta42	DESIGNED - MJS	REVISED -
Professional Design Firm Corporation License No. 184-003-001	TUG PROJECT NO. 3120032-10	DRAWN -	REVISED -
123 North 15th Street Mattoon, IL 61938 Phone: 217.235.3177 e-mail: upchurchgroup@upchurchgroup.com	PLOT SCALE = 40.0000 ' / in.	CHECKED - MJS	REVISED -
	PLOT DATE = 6/19/2023	DATE -	REVISED -

STATE OF ILLINOIS
DEPARTMENT OF TRANSPORTATION

DRAINAGE AND LANDSCAPE PLANS
AIRPORT ROAD OVER I–474

SCALE: 40.0000 ' / in. | SHEET 3 OF 4 SHEETS | STA. 192+00 TO STA. 198+00

F.A.I. RTE.	SECTION	COUNTY	TOTAL SHEETS	SHEET NO.
474	(72-3HB-4)BR	PEORIA	175	66
		CONTRACT NO. 68886		
	ILLINOIS	FED. AID PROJECT		

STONE RIPRAP, CLASS A4 DRAINAGE DITCH

TREE REMOVAL LIMIT

EXISTING 24" CORRUGATED METAL PIPE

STONE DUMPED RIPRAP, CLASS A3 ±8' WIDE

STONE RIPRAP, CLASS A4 20' X 15' SQUARE

METAL FLARED END SECTIONS, 12"

STONE RIPRAP, CLASS A4 15' X 10' SQUARE

EXISTING TOE OF EMBANKMENT

STONE RIPRAP, CLASS A4 10' X 10' SQUARE

METAL FLARED END SECTIONS, 12"

TREE REMOVAL LIMITS

STONE DUMPED RIPRAP, CLASS A3 ±10' WIDE

PIPE DRAINS, BITUMINOUS COATED CORRUGATED STEEL 12"

EXISTING PIPE DRAIN TO BE REMOVED

PIPE DRAINS, BITUMINOUS COATED CORRUGATED STEEL 12"

+50 END SH. CURB REPLACEMENT

PR. INLET, TYPE G-1
STA. 200+00
CONTROL POINT ELEV: 636.18
INVERT ELEV: 631.77

EX. INLET, TYPE G-1
STA. 202+25

PROJECT ENDS
STA. 202+98

MATCHLINE STA. 198+00

IDOT Sta 201+06.79

198 199 200+00 201 202 203 204

22

21

0 20 40 60
SCALE IN FEET

NOTES

ALL SEEDED AREAS SHALL INCLUDE A 6" MINIMUM LIFT OF TOPSOIL.

LEGEND

SEEDING, CLASS 2

SEEDING, CLASS 3A

RIPRAP

MODEL: Default
FILE NAME: P:\Civil_IDOT_DIST4\PTB 194-035 var PH I of 3\120032\WO 10 Airport Road Phase 2 3120032-10\CAD Sheets\h468886-sht-drain-hdscp-04 Airport.dgn

The Upchurch Group
architects engineers surveyors
Professional Design Firms Corporation License No. 184-003601
123 North 15th Street Mattoon, IL 61938 Phone: 217.235.3177
e-mail: upchurchgroup@upchurchgroup.com

USER NAME = Sta42	DESIGNED - MJS	REVISED -
TUG PROJECT NO. 3120032-10	DRAWN -	REVISED -
PLOT SCALE = 40.0000 ' / in.	CHECKED - MJS	REVISED -
PLOT DATE = 6/21/2023	DATE -	REVISED -

STATE OF ILLINOIS
DEPARTMENT OF TRANSPORTATION

DRAINAGE AND LANDSCAPE PLANS
AIRPORT ROAD OVER I-474

SCALE: 40.0000 ' / in. SHEET 4 OF 4 SHEETS STA. 198+00 TO STA. 202+98

F.A.I. RTE.	SECTION	COUNTY	TOTAL SHEETS	SHEET NO.
474	(72-3HB-4)BR	PEORIA	175	67

CONTRACT NO. 68886

ILLINOIS FED. AID PROJECT

LEGEND

- TEMPORARY DITCH CHECK
- EROSION CONTROL PERIMETER BARRIER
- EROSION CONTROL BLANKET
- TEMPORARY EROSION CONTROL SEEDING AND MULCH, METHOD 2
- INLET & PIPE PROTECTION

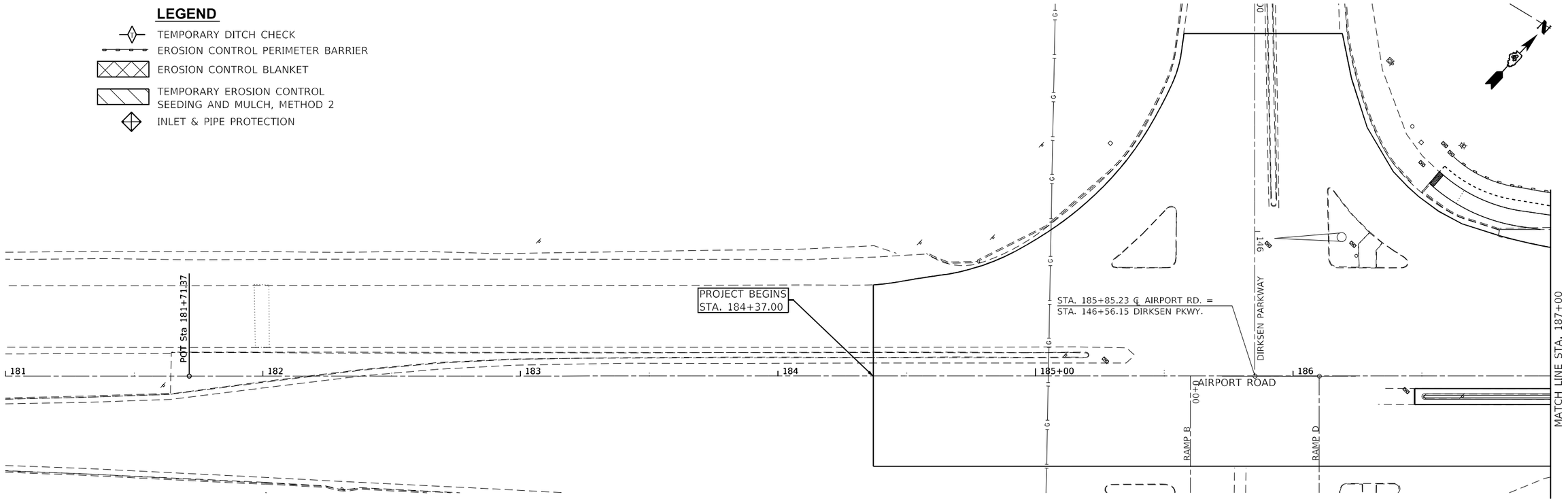

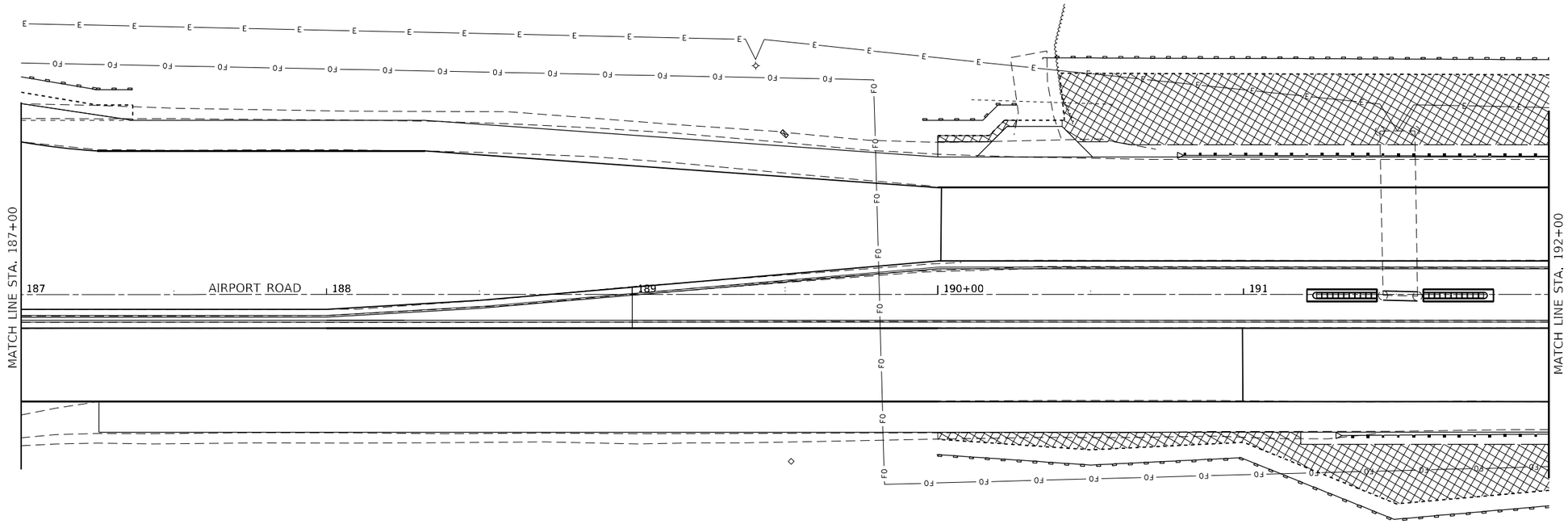

0 20 40 60
SCALE IN FEET

MODEL: Default
FILE NAME: P:\Civil_IDOT_DIST4\PTB 194-035 var PH I-II 3120032\WO 10 Airport Road Phase 2 3120032-10\CAD Sheets\0468886-sht-erosion1 Airport.dgn

The Upchurch Group
architects engineers surveyors
Professional Design Firms Corporation License No. : 184-003-001
123 North 15th Street Mattoon, IL 61938 Phone: 217.235.3177
e-mail: upchurchgroup@upchurchgroup.com

USER NAME = Sta42	DESIGNED -	REVISED -	
	DRAWN -	REVISED -	
PLOT SCALE = 40.0000 ' / in.	CHECKED -	REVISED -	
PLOT DATE = 6/19/2023	DATE -	REVISED -	

STATE OF ILLINOIS
DEPARTMENT OF TRANSPORTATION

EROSION CONTROL PLANS
AIRPORT ROAD OVER I-474

SCALE: 40.0000 ' / in. SHEET 1 OF 3 SHEETS STA. 184+37 TO STA. 192+00

F.A.I. RTE.	SECTION	COUNTY	TOTAL SHEETS	SHEET NO.
474	(72-3HB-4)BR	PEORIA	175	68
		CONTRACT NO. 68886		
	ILLINOIS	FED. AID PROJECT		

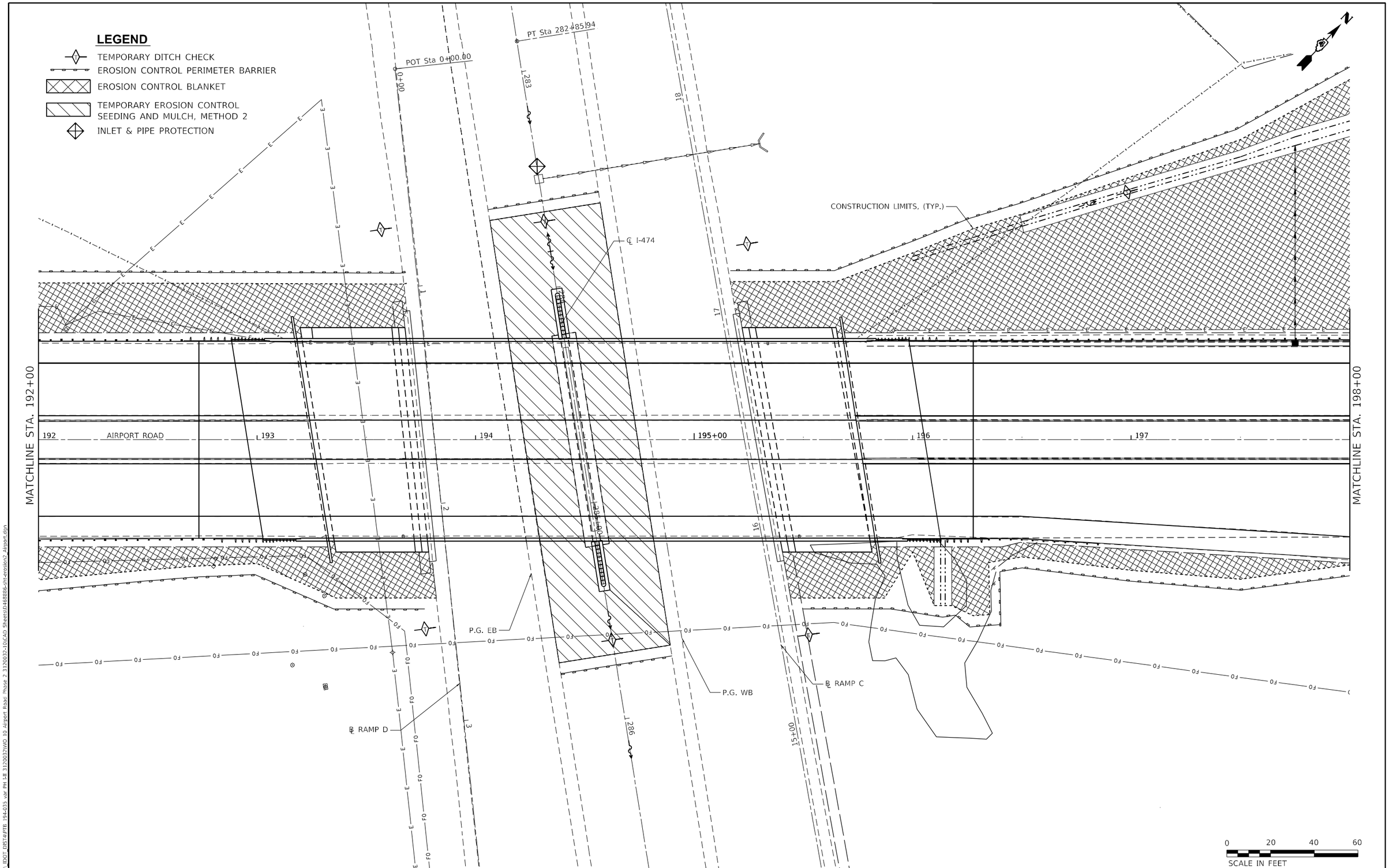

MODEL: Default
FILE NAME: P:\Civil\IDOT\DISTA\PTB 194-035 var PH I-II 3120032\WO 10 Airport Road Phase 2 3120032-10\CAD Sheets\D468886-tht-erosion2 Airport.dgn

The Upchurch Group architects engineers surveyors Professional Design Firm Corporation License No. 184-003-001 123 North 15th Street Mattoon, IL 61938 Phone: 217.235.3177 e-mail: upchurchgroup@upchurchgroup.com	USER NAME = Sta42	DESIGNED - MJS	REVISED -	STATE OF ILLINOIS DEPARTMENT OF TRANSPORTATION	EROSION CONTROL PLANS AIRPORT ROAD OVER I-474	F.A.I. RTE.	SECTION	COUNTY	TOTAL SHEETS	SHEET NO.
	TUG PROJECT NO. 3120032-10	DRAWN -	REVISED -			474	(72-3HB-4)BR	PEORIA	175	69
	PLOT SCALE = 40.0000 ' / in.	CHECKED - MJS	REVISED -					CONTRACT NO. 68886		
	PLOT DATE = 6/19/2023	DATE -	REVISED -		SCALE: 40.0000 ' / in. SHEET 2 OF 3 SHEETS STA. 192+00 TO STA. 198+00		ILLINOIS	FED. AID PROJECT		

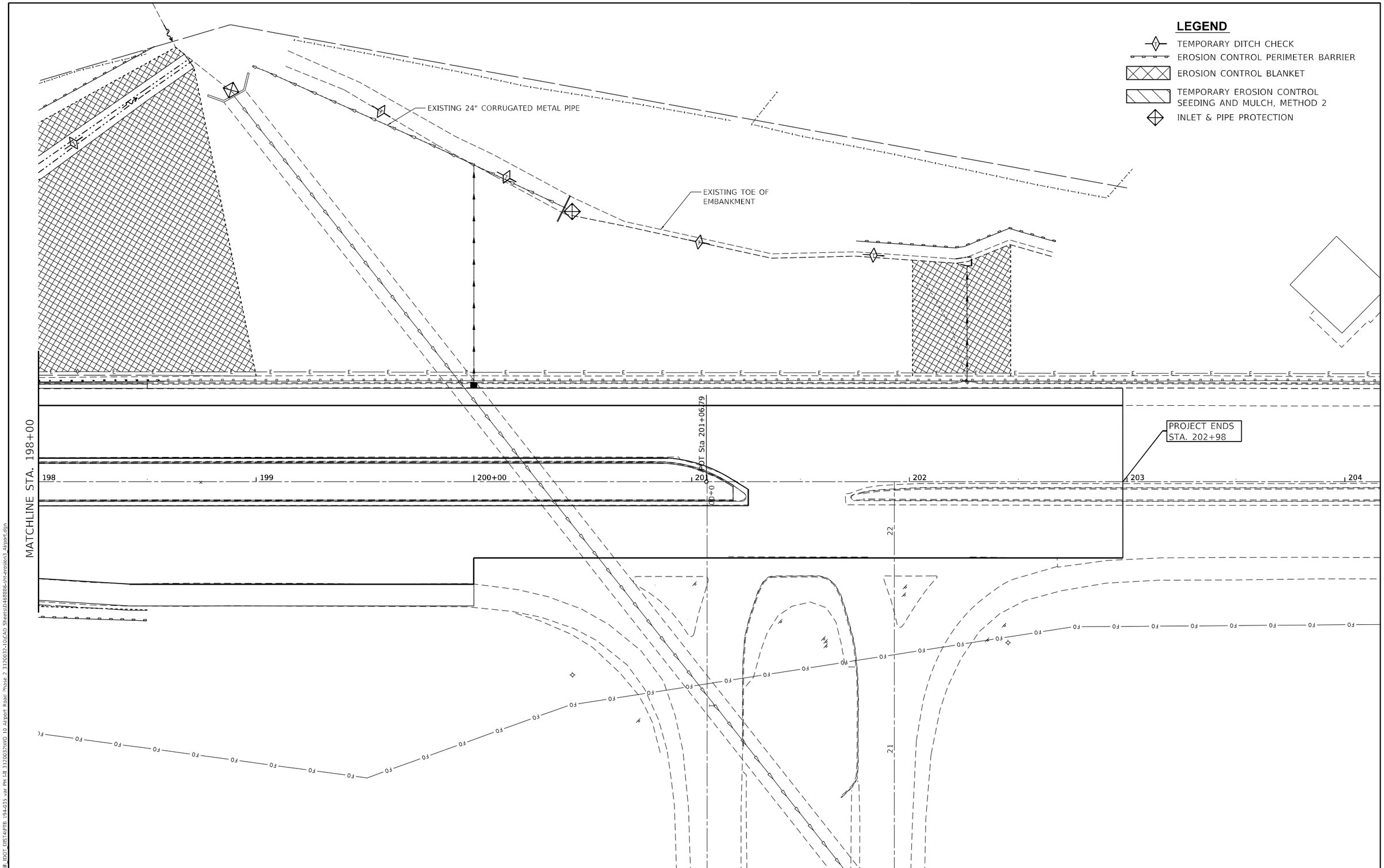

The Upchurch Group architects engineers surveyors Professional Design Firm Corporation License No. : 184-003-001 123 North 15th Street Mattoon, IL 61938 Phone: 217.235.3177 e-mail: upchurchgroup@upchurchgroup.com	USER NAME = Sta42	DESIGNED - MJS	REVISED -
	TUG PROJECT NO. 3120032-10	DRAWN -	REVISED -
	PLOT SCALE = 40.0000 ' / in.	CHECKED - MJS	REVISED -
	PLOT DATE = 6/19/2023	DATE -	REVISED -

STATE OF ILLINOIS
DEPARTMENT OF TRANSPORTATION

EROSION CONTROL PLANS
AIRPORT ROAD OVER I-474

SCALE: 40.0000 ' / in. SHEET 3 OF 3 SHEETS STA. 198+00 TO STA. 202+98

F.A.I. RTE.	SECTION	COUNTY	TOTAL SHEETS	SHEET NO.
474	(72-3HB-4)BR	PEORIA	175	70
		CONTRACT NO. 68886		
		ILLINOIS FED. AID PROJECT		

MODEL: Default
FILE NAME: P:\Civil\IDOT_DIST4\PTB 194-035 v2\P PH I-II 3120032\WO 10 Airport Road Phase 2 3120032-10\CAD Sheets\D468886-sht-erosion3 Airport.dgn

NOTE: RIGHT-OF-WAY BASED OFF AS-BUILTS.
ACTUAL LIMITS MAY VARY.

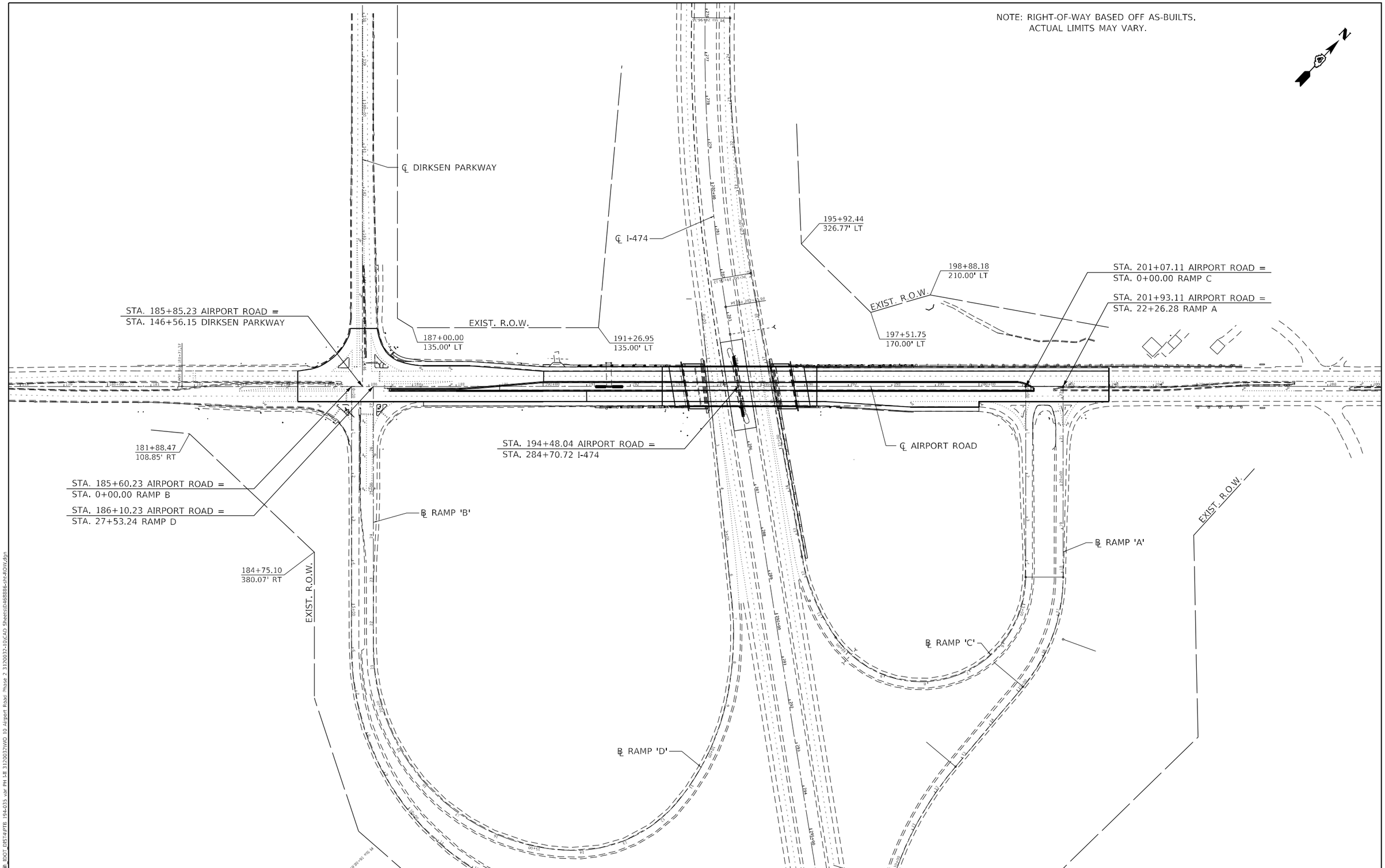

MODEL: Default
FILE NAME: P:\Civil_IDOT_DIST4\PTB 194-033 var PH I-II 3120032\WO 10 Airport Road Phase 2 3120032-10\CAD Sheets\D46886-ilh-ROW.dgn

The Upchurch Group architects engineers surveyors Professional Design Firm Corporation License No. 184-003001 123 North 15th Street Mattoon, IL 61938 Phone: 217.235.3177 e-mail: upchurchgroup@upchurchgroup.com	USER NAME = Sta42	DESIGNED - MJS	REVISED -	**STATE OF ILLINOIS** **DEPARTMENT OF TRANSPORTATION**
	TUG PROJECT NO. 3120032-10	DRAWN - SAE	REVISED -	
	PLOT SCALE = 200.0000 ' / in.	CHECKED - MJS	REVISED -	
	PLOT DATE = 6/19/2023	DATE -	REVISED -	

RIGHT-OF-WAY PLAN
AIRPORT ROAD OVER I-474

SCALE: 200.0000 ' / in. SHEET OF SHEETS STA. TO STA.

F.A.I. RTE.	SECTION	COUNTY	TOTAL SHEETS	SHEET NO.
474	(72-3HB-4)BR	PEORIA	175	71
		CONTRACT NO. 68886		
	ILLINOIS	FED. AID PROJECT		

LEGEND

1. MODIFIED URETHANE PAVEMENT MARKING - LINE 4"
2. MODIFIED URETHANE PAVEMENT MARKING - LINE 6"
3. MODIFIED URETHANE PAVEMENT MARKING - LINE 8"
4. MODIFIED URETHANE PAVEMENT MARKING - LINE 12"
5. MODIFIED URETHANE PAVEMENT MARKING - LINE 24"
6. MODIFIED URETHANE PAVEMENT MARKING - LETTERS & SYMBOLS

▷ RAISED REFLECTIVE PAVEMENT MARKER (ONE-WAY CRYSTAL)

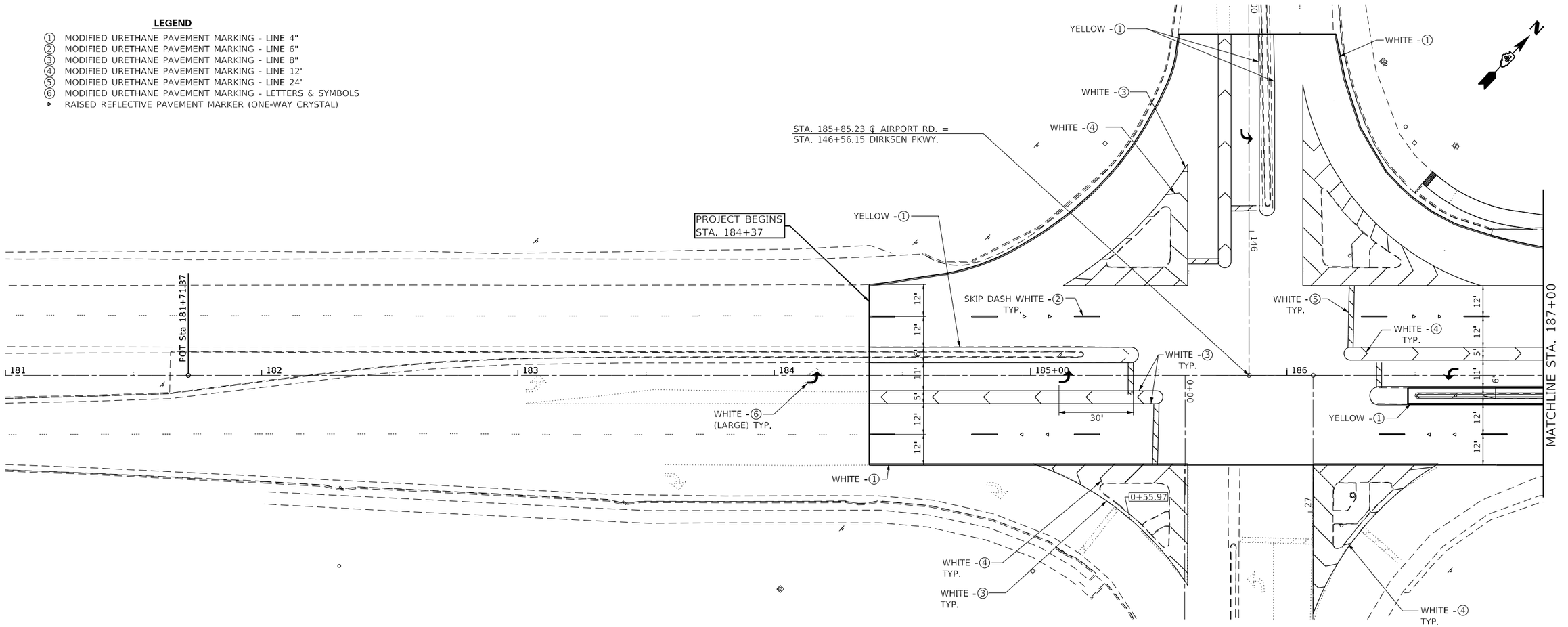

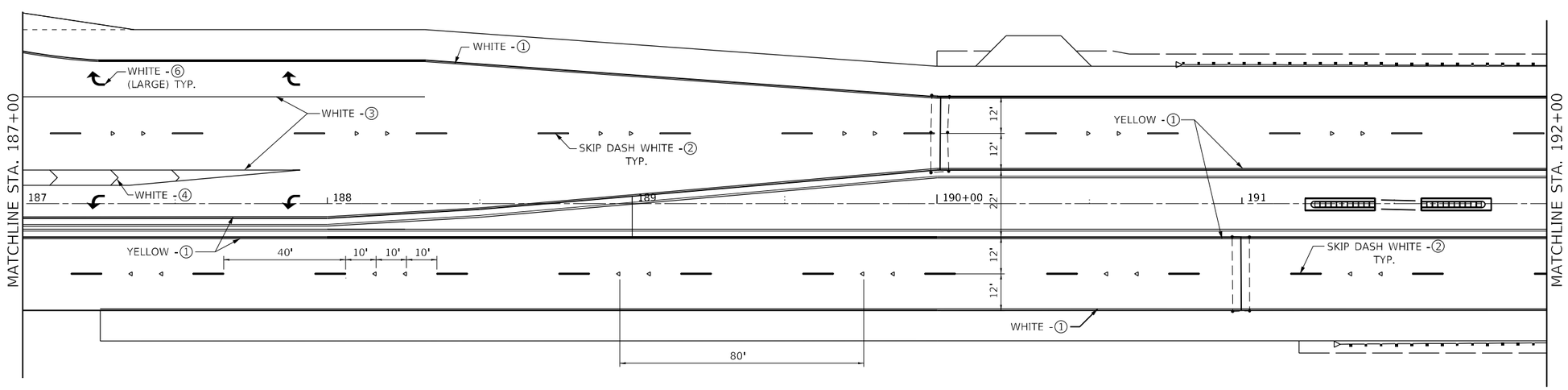

0 20 40 60
SCALE IN FEET

The Upchurch Group
architects engineers surveyors
Professional Design Firm Corporation
License No. 184-001401
123 North 15th Street
Mattoon, IL 61938
Phone: 217.235.3177
e-mail: upchurchgroup@upchurchgroup.com

USER NAME = Sta42	DESIGNED -	REVISED -
	DRAWN -	REVISED -
PLOT SCALE = 40.0000 ' / in.	CHECKED -	REVISED -
PLOT DATE = 6/21/2023	DATE -	REVISED -

STATE OF ILLINOIS
DEPARTMENT OF TRANSPORTATION

PAVEMENT MARKING & SIGNING PLAN
AIRPORT ROAD OVER I-474

SCALE: 40.0000 ' / in. SHEET 1 OF 2 SHEETS STA. 184+37 TO STA. 192+00

F.A.I. RTE.	SECTION	COUNTY	TOTAL SHEETS	SHEET NO.
474	(72-3HB-4)BR	PEORIA	175	72
		CONTRACT NO. 68886		
	ILLINOIS	FED. AID PROJECT		

MODEL: Default
FILE NAME: P:\Civil_IDOT_DIST4\PTB_194-035_var PH I-II 3120032\WO 10 Airport Road Phase 2 3120032-10\CAD Sheets\D468886-sht-zmk1_Airport_.dgn

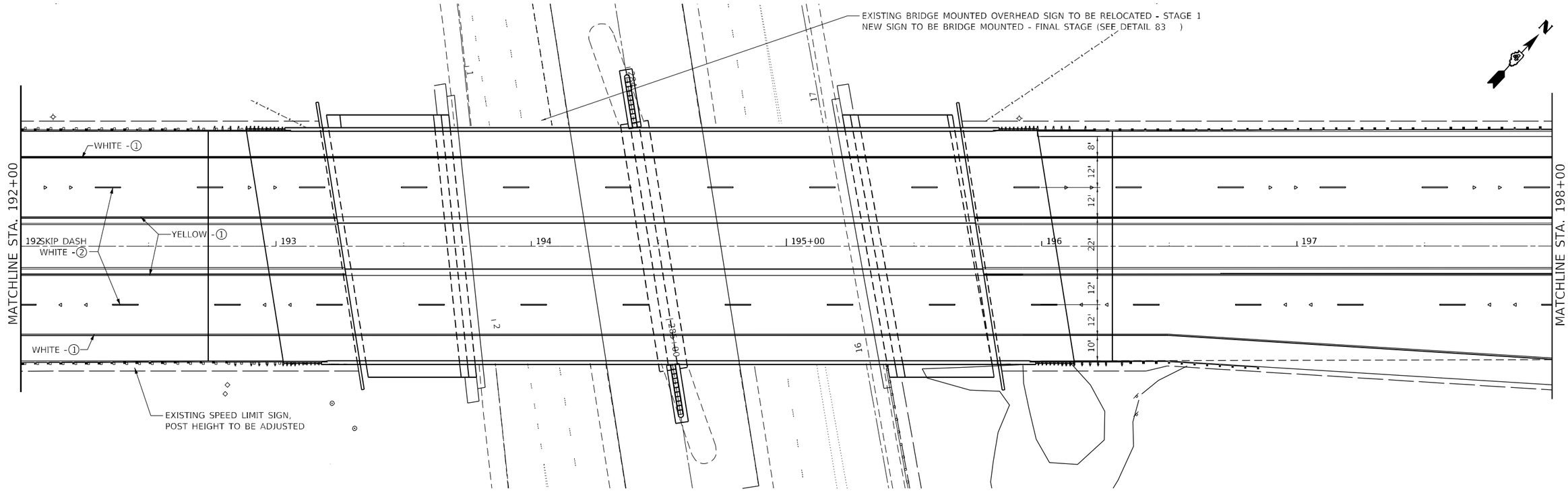

LEGEND

① MODIFIED URETHANE PAVEMENT MARKING - LINE 4"
② MODIFIED URETHANE PAVEMENT MARKING - LINE 6"
③ MODIFIED URETHANE PAVEMENT MARKING - LINE 8"
④ MODIFIED URETHANE PAVEMENT MARKING - LINE 12"
⑤ MODIFIED URETHANE PAVEMENT MARKING - LINE 24"
⑥ MODIFIED URETHANE PAVEMENT MARKING - LETTERS & SYMBOLS
▷ RAISED REFLECTIVE PAVEMENT MARKER (ONE-WAY CRYSTAL)

0 20 40 60
SCALE IN FEET

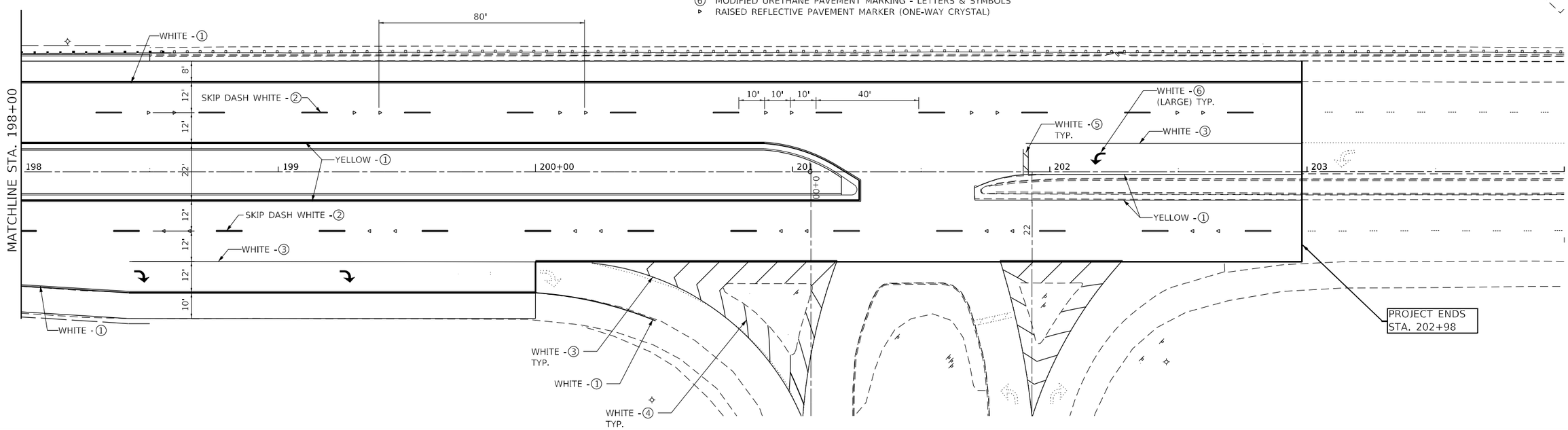

MODEL: Default
FILE NAME: P:\Civil_IDOT_DIST4\PTB 194-035 var PH I of 3\120032\WO 10 Airport Road Phase 2 3120032-10\CAD Sheets\h468886-sht-gen02_Airport.dgn

The Upchurch Group architects engineers surveyors Professional Design Firm Corporation License No. : 184-003-001 123 North 15th Street Mattoon, IL 61938 Phone: 217.235.3177 e-mail: upchurchgroup@upchurchgroup.com	USER NAME = Sta42	DESIGNED -	REVISED -	STATE OF ILLINOIS DEPARTMENT OF TRANSPORTATION	PAVEMENT MARKING & SIGNING PLAN AIRPORT ROAD OVER I-474	F.A.I. RTE. 474	SECTION (72-3HB-4)BR	COUNTY PEORIA	TOTAL SHEETS 175	SHEET NO. 73
		DRAWN -	REVISED -					CONTRACT NO. 68886		
	PLOT SCALE = 40.0000 ' / in.	CHECKED -	REVISED -							
	PLOT DATE = 6/21/2023	DATE -	REVISED -		SCALE: 40.0000 ' / in. SHEET 2 OF 2 SHEETS STA. 192+00 TO STA. 202+98		ILLINOIS FED. AID PROJECT			

	CONSTRUCTION NOTES (ELECTRICAL)
1.	THE LOCATION OF ALL UTILITIES AND PRIVATELY OWNED FACILITIES SHALL BE FIELD VERIFIED BY THE CONTRACTOR PRIOR TO THE INSTALLATION OF ANY COMPONENTS.
2.	THE CONTRACTOR SHALL BE RESPONSIBLE FOR LOCATING EXISTING IDOT ELECTRICAL FACILITIES AT HIS/HER OWN EXPENSE IF REQUIRED. THE CONTRACTOR SHALL ALSO BE LIABLE FOR ANY DAMAGE TO IDOT FACILITIES RESULTING FROM INACCURATE LOCATING.
3.	ELECTRICAL WORK SHALL CONFORM WITH NATIONAL, STATE, AND LOCAL CODES.
4.	THE CONTRACTOR SHALL PROVIDE ELECTRICAL CABLE SLACK IN ACCORDANCE WITH ARTICLE 873.03.
5.	ELECTRICAL CABLE WILL BE MEASURED FOR PAYMENT IN ACCORDANCE WITH ARTICLE 817.04.
6.	ALL SURPLUS MATERIALS SHALL BE DISPOSED OF IN ACCORDANCE WITH ARTICLE 202.03 OF THE STANDARD SPECIFICATIONS.
7.	THE CONTRACTOR SHALL VERIFY FIELD CONDITIONS PRIOR TO BIDDING. THERE WILL BE NO ADDITIONAL COMPENSATION PAID FOR CLAIMS THAT ARISE FROM A FAILURE TO FULLY INVESTIGATE EXISTING FIELD CONDITIONS.
8.	REMOVAL OF EXISTING ITEMS (BREAKAWAY COUPLINGS, METAL FOUNDATIONS, WIRING, ETC.) WILL NOT BE PAID FOR SEPARATELY, BUT SHALL BE INCLUDED IN THE UNIT BID PRICES FOR THE PROPOSED ITEMS. THE CONTRACTOR SHALL DISPOSE OF ALL ITEMS OFF OF THE RIGHT OF WAY.
9.	THE EXISTING LIGHTING SYSTEM SHALL REMAIN IN OPERATION DURING THE INSTALLATION OF THE PROPOSED ITEMS.
10.	ALL LIGHTING STRUCTURES SHALL BE BONDED IN ACCORDANCE WITH NEC REQUIREMENTS. THIS WORK SHALL BE PAID FOR AT THE CONTRACT UNIT PRICE FOR "ELECTRIC CABLE IN CONDUIT, EQUIPMENT GROUNDING CONDUCTOR, NO. 6 1C" AND SHALL INCLUDE ALL LABOR, EQUIPMENT, AND MATERIALS (INCLUDING CLAMPS, HARDWARE, ELECTRICAL CABLE, AND ALL OTHER ITEMS REQUIRED TO BOND THE STRUCTURES).
11.	SDR 13.5 HDPE COILABLE DUCT MAY BE USED IN PLACE OF SCHEDULE 40 PVC CONDUIT.
12.	THE CONTRACTOR SHALL COVER ALL EXPOSED RODENT ENTRYWAYS GREATER THAN 0.25 INCHES AROUND COUPLINGS, ANCHOR BOLT SLOTS, ETC. TO PREVENT RODENT ENTRY. THIS WORK SHALL BE COMPLETED TO THE SATISFACTION OF THE ENGINEER. THE COST OF THIS WORK SHALL BE INCLUDED IN THE PAY ITEM "BREAKAWAY DEVICE, COUPLING WITH STAINLESS STEEL SCREEN."
13.	THE CONTRACTOR SHALL FURNISH AND INSTALL NEW BREAKWAY COUPLINGS IN ACCORDANCE WITH THE MANUFACTURER'S RECOMMENDATIONS. THE CONTRACTOR SHALL FURNISH ALL HARDWARE AND OTHER ITEMS REQUIRED FOR INSTALLATION OF THE BREAKAWAY COUPLINGS. THE COST OF THIS WORK SHALL BE INCLUDED IN THE PAY ITEM "BREAKAWAY DEVICE, COUPLING WITH STAINLESS STEEL SCREEN."
14.	THE CONTRACTOR SHALL FURNISH AND INSTALL NEW STAINLESS STEEL OR PERFORATED ALUMINUM SCREENING AROUND THE RELOCATED LIGHT POLE. THE PROPOSED SCREEN SHALL BE SECURELY BANDED ON THE TOP AND BOTTOM OF THE BREAKAWAY COUPLINGS TO PREVENT RODENT ENTRY AND NO GAPS IN EXCESS OF 0.25 INCH WILL BE ALLOWED. THE COST OF THIS WORK SHALL BE INCLUDED IN THE PAY ITEM "FURNISH AND INSTALL METAL SCREEN."
15.	ALL EXISTING UNIT-DUCT, ELECTRIC CABLING, AND LIGHT POLE FOUNDATIONS SHALL BE RE-USED WITH THE PROPOSED LIGHTING INSTALLATION.
16.	THE HANDHOLES SHALL BE CONSTRUCTED SO THAT THE TOP OF THE FRAME WILL BE FLUSH WITH THE SURFACE OF THE SHOULDER OR GROUND LINE.
17.	COILABLE POLYETHYLENE DUCT MAY BE SUBSTITUTED FOR PVC PUSHED OR TRENCHED.
18.	NO ADDITIONAL COMPENSATION WILL BE ALLOWED FOR PLACING CONDUIT AT GREATER THAN 2 FT. MINIMUM DEPTH TO AVOID OBSTACLES SUCH AS UNDERGROUND UTILITIES.
19.	THE CONTRACTOR IS RESPONSIBLE FOR THE COST OF UNCOVERING OR HAND DIGGING AROUND UTILITIES AS NECESSARY. THIS COST OF THIS WORK SHALL BE INCLUDED IN THE UNIT PRICES FOR THE CONDUITS.
20.	THE CONTRACTOR SHALL FURNISH AND INSTALL GROUT AROUND ALL DRILLED CONDUITS LOCATED INSIDE OF HANDHOLES TO PREVENT WATER AND DIRT INTRUSION INTO THE HANDHOLE. THE COST OF THIS WORK SHALL BE INCLUDED IN THE COST OF "DRILL EXISTING HANDHOLE."
21.	THE CONTRACTOR SHALL REMOVE AND DELIVER THE EXISTING LED SIGN LIGHT LUMINAIRE TO THE IDOT PEORIA WEST MAINTENANCE FACILITY AT 6500 W. HIGHWAY 150 EDWARDS, IL 61529. THE COST OF THIS WORK WILL BE INCLUDED IN THE BID PRICE FOR "REMOVE EXISTING LIGHTING SYSTEM."

LEGEND

	EX. LIGHT POLE		EX. LIGHT POLE (RELOCATED TO PROP. FOUNDATION)
	EX. SIGN LIGHT	BBU	PROP. BATTERY BACKUP SYSTEM
	EX. JUNCTION BOX		PROP. JUNCTION BOX
	EX. HANDHOLE		PROP. HANDHOLE
	EX. UNIT DUCT		PROP. UNIT DUCT
	EX. CONDUIT		PROP. CONDUIT
	EX. MAST ARM	V	PROP. VIDEO DETECTION CAMERA
	EX. SIGNAL CABINET		EX. CCTV CAMERA
	EX. LED SIGN LUMINAIRE	"R"	REMOVAL ITEM

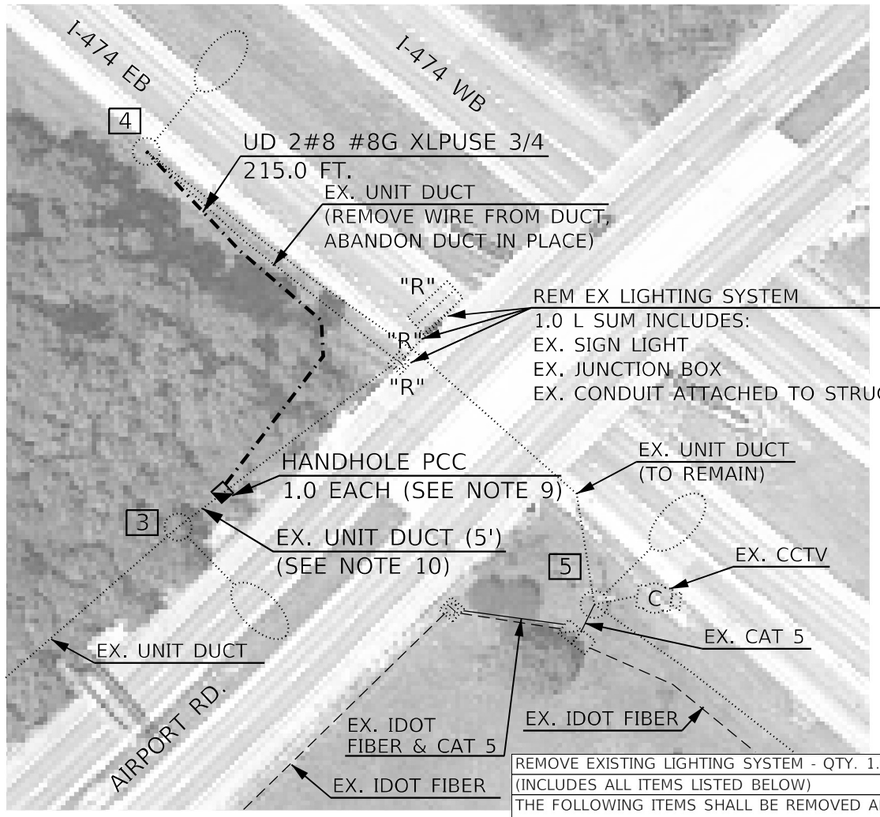

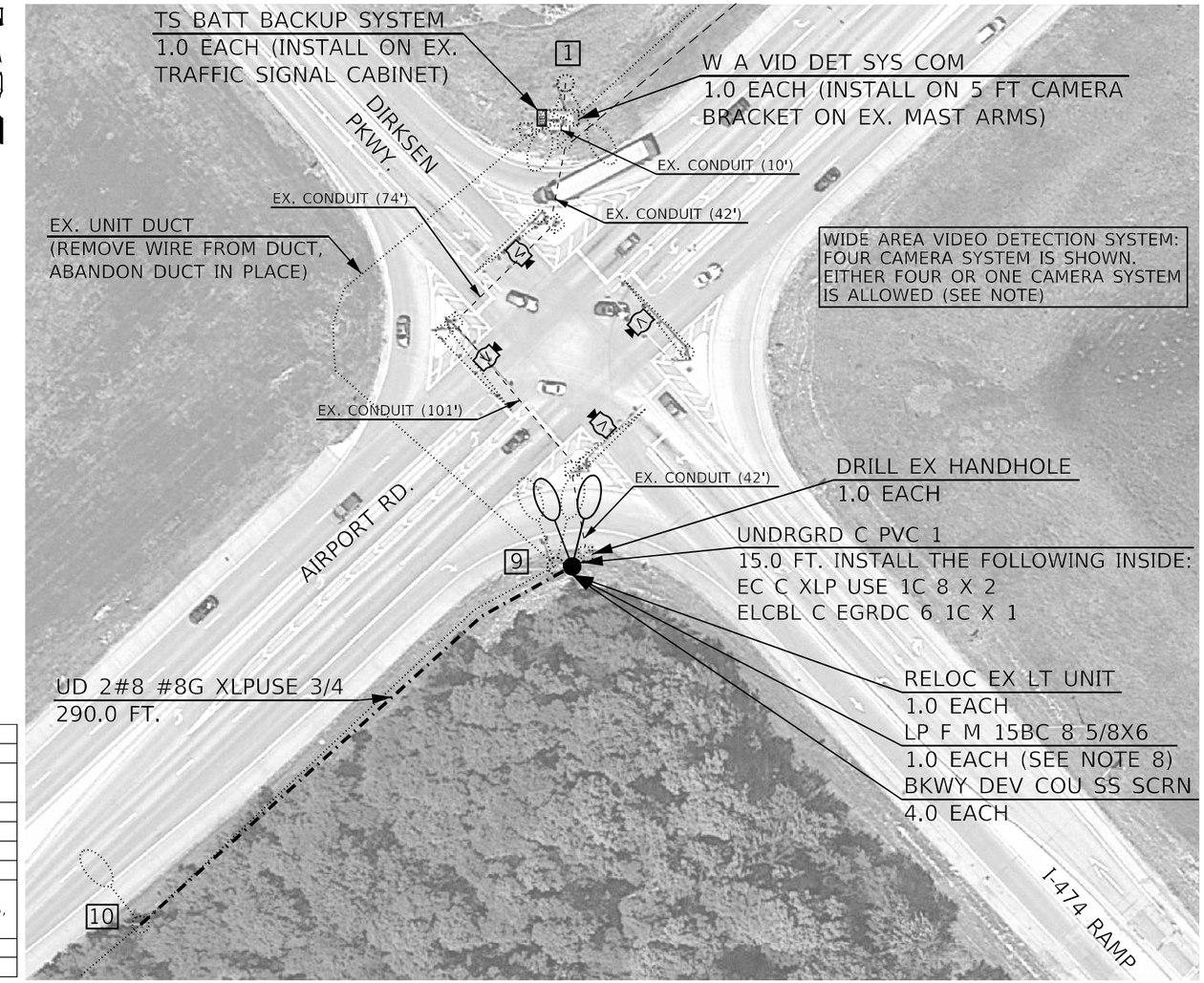

REMOVE EXISTING LIGHTING SYSTEM - QTY. 1.0 L SUM	
(INCLUDES ALL ITEMS LISTED BELOW)	
THE FOLLOWING ITEMS SHALL BE REMOVED AND DISPOSED OF BY THE CONTRACTOR OFF OF THE RIGHT-OF-WAY:	
QTY.	ITEM DESCRIPTION
1.0	JUNCTION BOX ATTACHED TO STRUCTURE
ALL	ELECTRICAL CABLES NOT USED IN PROPOSED DESIGN
ALL	CONDUIT ATTACHED TO STRUCTURE (SIGN LIGHT & LIGHT POLE 4)
THE FOLLOWING ITEMS SHALL BE REMOVED AND DELIVERED TO THE IDOT PEORIA WEST MAINTENANCE FACILITY AT 6500 W. HIGHWAY 150 EDWARDS, IL 61529.	
QTY.	ITEM DESCRIPTION
1.0	LED SIGN LIGHT LUMINAIRE

NOTES:

1. PVC CONDUIT AND MATCHING WIRE TYPE, SIZE AND NUMBER OF CONDUCTORS MAY BE INSTALLED IN PLACE OF UNIT DUCT PAY ITEMS.
2. SDR 13.5 HDPE COILABLE DUCT MAY BE USED IN PLACE OF SCHEDULE 40 PVC CONDUIT.
3. THE CONTRACTOR SHALL FURNISH AND INSTALL EITHER A FOUR CAMERA OR ONE CAMERA VIDEO DETECTION SYSTEM PER THE PROJECT SPECIAL PROVISION, "WIDE AREA VIDEO DETECTION SYSTEM COMPLETE."
4. FOR A FOUR CAMERA VIDEO DETECTION SYSTEM, THE PROPOSED VIDEO DETECTION CAMERAS ARE TO BE INSTALLED ON EXISTING MAST ARMS ON 5 FT. BRACKETS, CENTERED OVER THE APPROACH. THIS WORK WILL BE INCLUDED IN THE COST OF THE PAY ITEM "WIDE AREA VIDEO DETECTION SYSTEM COMPLETE."
5. FOR A ONE CAMERA VIDEO DETECTION SYSTEM, THE PROPOSED VIDEO DETECTION CAMERA IS TO BE INSTALLED ON EXISTING LIGHT POLE 1. THIS WORK WILL BE INCLUDED IN THE COST OF THE PAY ITEM "WIDE AREA VIDEO DETECTION SYSTEM COMPLETE."
6. THE RELOCATED LIGHT POLE 9 SHALL BE CONNECTED TO THE EX. LIGHTING CONTROLLER VIA THE EXISTING TRAFFIC SIGNAL CONDUITS AND THE PROPOSED 1" PVC AS SHOWN IN THE PLANS.
7. THE CONTRACTOR SHALL SPLICE THE PROPOSED UNIT DUCT THAT CONNECTS LIGHT POLE 4 TO THE EXISTING CIRCUIT IN THE BASE OF LIGHT POLE 3. THE CONTRACTOR SHALL STRIP THE OUTER DUCT AND INSTALL THE CONDUCTORS IN THE EXISTING DUCT BETWEEN THE PROPOSED HANDHOLE AND LIGHT POLE 3 TO AVOID A SPLICE IN THE PROPOSED HANDHOLE.
8. THE PROPOSED METAL FOUNDATION SHALL BE LOCATED 5 FT. EAST OF THE EXISTING LIGHT POLE FOUNDATION.
9. THE CONTRACTOR SHALL INTERCEPT THE EXISTING UNIT DUCT WITHIN 5 FT. OF LIGHT POLE 3 AND INSTALL THE PROPOSED HANDHOLE AT THAT LOCATION. THIS WORK WILL NOT BE PAID FOR SEPARATELY, BUT SHALL BE INCLUDED IN THE BID PRICE OF THE HANDHOLE.
10. THE CONTRACTOR SHALL REMOVE THE CONDUCTORS FROM THE EXISTING UNIT DUCT BETWEEN THE PROPOSED HANDHOLE AND LIGHT POLE 3, GROUND WIRE TO REMAIN. THE CONTRACTOR SHALL INSTALL NEW CONDUCTORS FROM THE PROPOSED UNIT DUCT IN THE EXISTING DUCT. THIS WORK WILL NOT BE PAID FOR SEPARATELY, BUT SHALL BE INCLUDED IN THE BID PRICE OF THE UNIT DUCT.
11. THE CONTRACTOR SHALL FURNISH AND INSTALL NEW POLE WIRE, SURGE ARRESTOR, FUSES, FUSEHOLDERS, ETC. IN THE PROPOSED LIGHT POLE 9. THIS WORK WILL NOT BE PAID FOR SEPARATELY, BUT SHALL BE INCLUDED IN THE BID PRICE OF "RELOCATE EXISTING LIGHTING UNIT."

INSTALL EC C XLP USE 1C 8 X 2 IN EX. SIGNAL CONDUIT FROM CONTROLLER TO HANDHOLE IN SOUTH QUADRANT

BILL OF MATERIALS		
ITEM DESCRIPTION	UNIT	QTY.
UNDERGROUND CONDUIT, PVC, 1" DIA.	FOOT	15.0
HANDHOLE, PORTLAND CEMENT CONCRETE	EACH	1.0
UNIT DUCT, 600V, 2-1C NO.8, 1/C NO.8 GROUND, (XLP-TYPE USE), 3/4" DIA. POLYTHYLENE	FOOT	528.5
ELECTRIC CABLE IN CONDUIT, 600V (XLP-TYPE USE) 1/C NO. 8	FOOT	645.0
LIGHT POLE FOUNDATION, METAL, 15" BOLT CIRCLE, 8 5/8" X 6'	EACH	1.0
BREAKAWAY DEVICE, COUPLING WITH STAINLESS STEEL SCREEN	EACH	4.0
RELOCATE EXISTING LIGHTING UNIT	EACH	1.0
ELECTRIC CABLE IN CONDUIT, EQUIPMENT GROUNDING CONDUCTOR, NO. 6 1C	FOOT	24.5
DRILL EXISTING HANDHOLE	EACH	1.0
WIDE AREA VIDEO DETECTION SYSTEM COMPLETE	EACH	1.0
REMOVE EXISTING LIGHTING SYSTEM	L SUM	1.0
TRAFFIC SIGNAL BATTERY BACKUP SYSTEM	EACH	1.0

NOT TO SCALE

MODEL: Default
FILE NAME: S:\GENWINWORD\DESP\ANJhanson\# 68886 Airport Rd\68886 Airport Rd Electrical (04-20-23).dgn

USER NAME = trevor.hanson	DESIGNED -	REVISED -	
	DRAWN -	REVISED -	
PLOT SCALE = 92.3218 ' / in.	CHECKED -	REVISED -	
PLOT DATE = 4/20/2023	DATE -	REVISED -	

STATE OF ILLINOIS
DEPARTMENT OF TRANSPORTATION

PROPOSED LIGHTING & SIGNAL PLANS
I-474 & AIRPORT RD. INTERCHANGE - PEORIA COUNTY

SCALE: SHEET OF SHEETS STA. TO STA.

F.A.I. RTE.	SECTION	COUNTY	TOTAL SHEETS	SHEET NO.
474	(72-3H8-4)BR	PEORIA	175	75
		CONTRACT NO. 68886		
	ILLINOIS	FED. AID PROJECT		

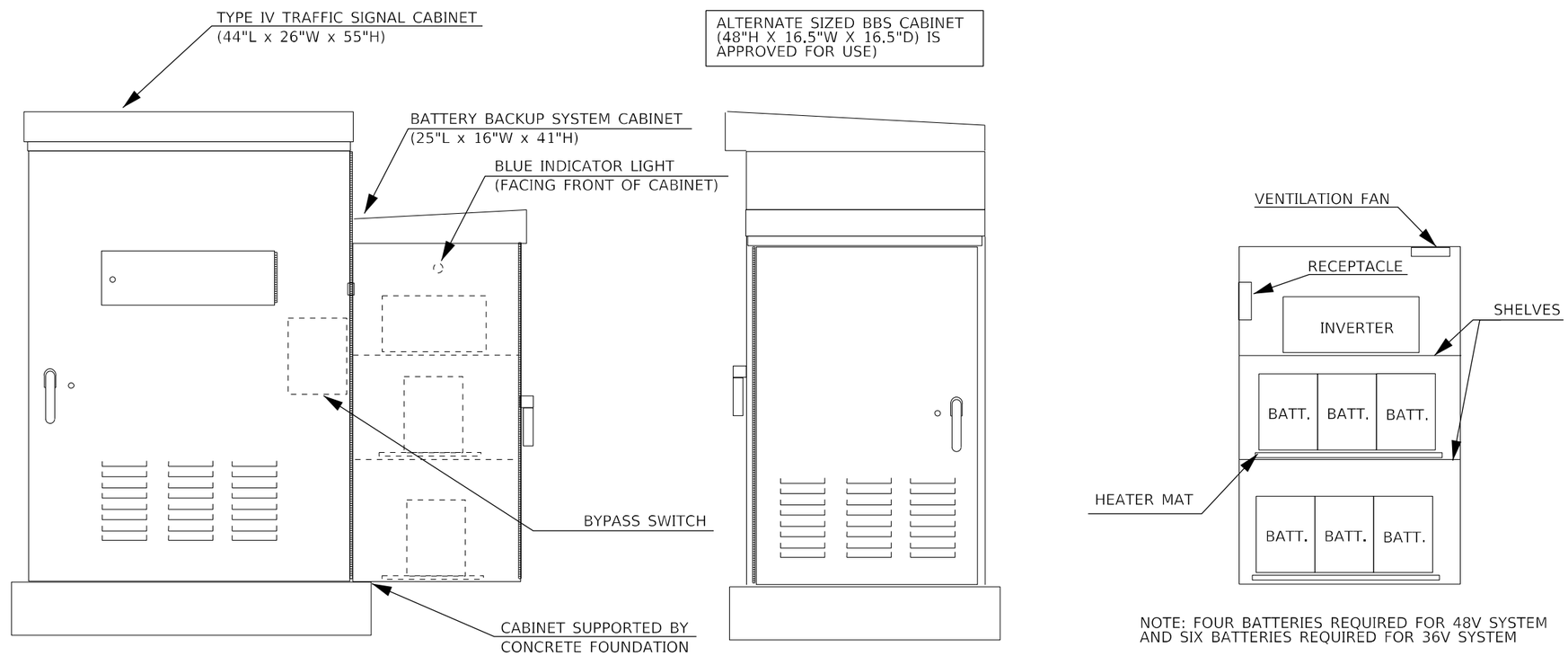

BATTERY BACKUP CABINET DETAILS

NOTES:

1. THE BATTERY BACKUP SYSTEM CABINET SHALL BE A NEMA TYPE 3R CABINET WITH MINIMUM OUTSIDE DIMENSIONS OF 41" (H) X 25" (W) X 16" (D). THE CABINET SHALL BE EQUIPPED WITH A THREE POINT LATCHING MECHANISM, TWO SHELVES, THERMOSTATICALLY CONTROLLED VENTILATION FAN, AND A POWER RECEPTACLE. THE CABINET SHALL BE MOUNTED TO THE SIDE OF THE PROPOSED TYPE IV CABINET WITH THE BOTTOM OF THE CABINET SUPPORTED BY THE CONCRETE FOUNDATION.
2. ALL CABINET LIGHTS, HEATER STRIPS, VENTILATION FANS, AND SERVICE RECEPTACLES SHALL BE BYPASSED WHEN THE BATTERY BACKUP UNIT IS OPERATING IN BATTERY MODE.
3. THE BATTERY BACKUP UNITS CONTACTS SHALL BE WIRED TO PROVIDE LOCAL CONTROLLER ALARMS (AS AVAILABLE IN THE PROPOSED CABINETS.)
4. THE BYPASS SWITCH SHALL BE AUTOMATIC AND SHALL BE INSTALLED IN THE BBS CABINET.
5. THE CABINET SHALL BE EQUIPPED WITH A DELUXE PLEATED AIR FILTER AND PLEXIGLASS SHIELDS FOR ALL TERMINALS CARRYING LINE VOLTAGE.

NOT TO SCALE

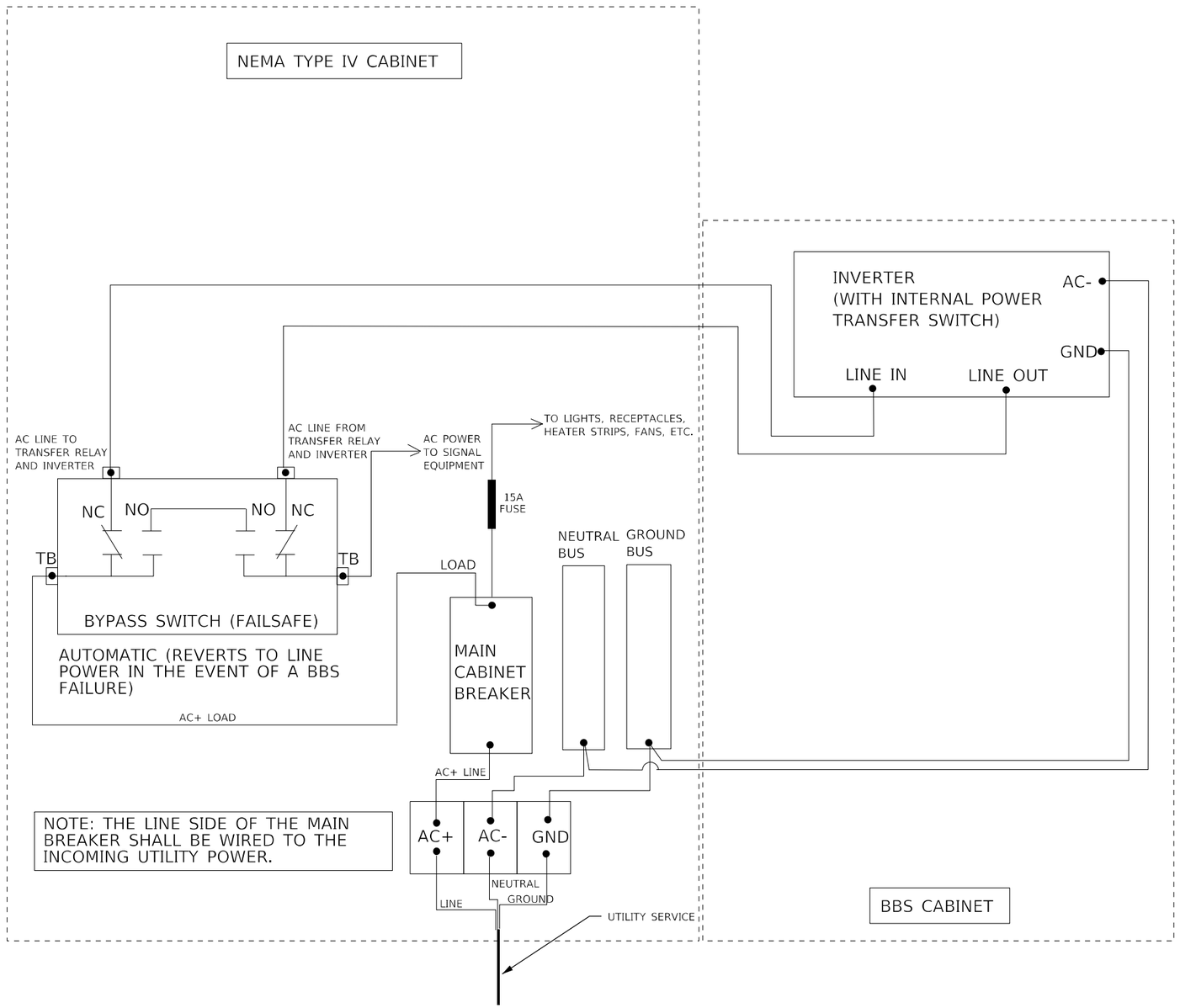

NOT TO SCALE

MODEL: Default
FILE NAME: S:\GEN\WINWORD\DESIGN\Hanson,# 68886 Airport Rd\68886 Airport Rd Electrical (04-20-23).dgn

USER NAME = trevor.hanson	DESIGNED -	REVISED -	
	DRAWN -	REVISED -	
PLOT SCALE = 92.3218 ' / in.	CHECKED -	REVISED -	
PLOT DATE = 4/20/2023	DATE -	REVISED -	

STATE OF ILLINOIS
DEPARTMENT OF TRANSPORTATION

BATTERY BACKUP SYSTEM CABINET WIRING DIAGRAM

SCALE: | SHEET OF SHEETS | STA. TO STA.

F.A.I. RTE.	SECTION	COUNTY	TOTAL SHEETS	SHEET NO.
474	(72-3HB-4)BR	PEORIA	175	77

CONTRACT NO. 68886

ILLINOIS | FED. AID PROJECT

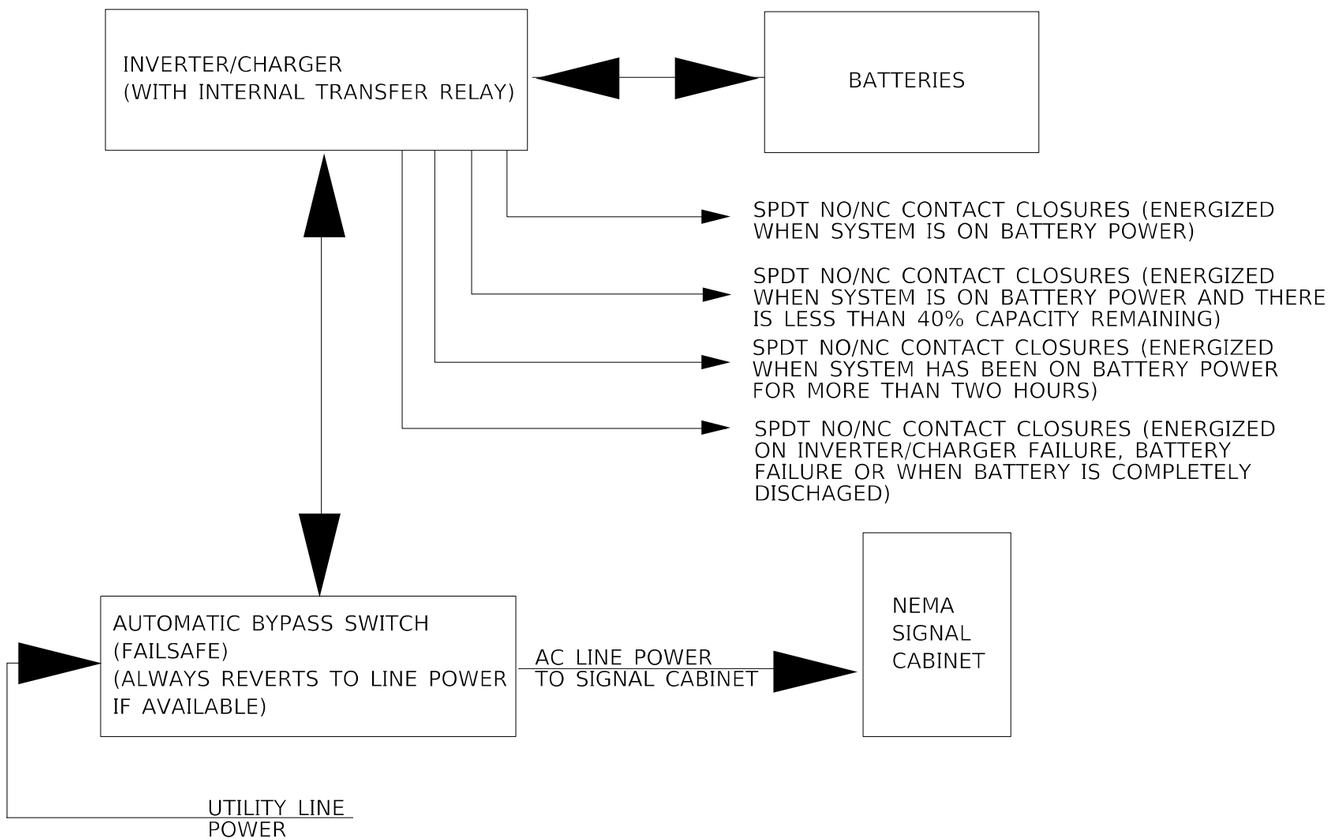

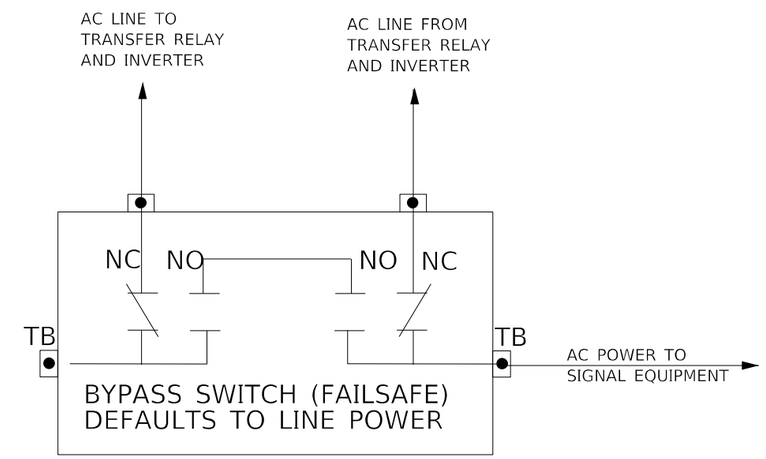

NOTES:

1. TB - #8 TERMINAL BLOCKS
2. NO - NORMALLY OPEN
3. NC - NORMALLY CLOSED
4. NO/NC CONTACTS SHALL ALL TOGGLE SIMULTANEOUSLY WITH A SINGLE MANUALLY OPERATED SWITCH.
5. THE MANUAL BYPASS SWITCH SHALL ONLY SWITCH LINE POWER. THE NEUTRAL AND EQUIPMENT GROUND SHALL NOT BE SWITCHED AND SHALL BE CONNECTED TO THE NEMA CABINET BUSSES.

ON BATTERY			LOW BATTERY			TIMER			BBS FAIL		
NO	C	NC	NO	C	NC	NO	C	NC	NO	C	NC

NO/NC CONTACTS MAY SHARE OR USE SEPARATE COMMONS.

NOT TO SCALE

MODEL: Default
FILE NAME: S:\GEN\VIN\OHD\DESIGN\Hanson\# 68886 Airport Rd\68886 Airport Rd Electrical 104-20-23.dgn

USER NAME = trevor.hanson	DESIGNED -	REVISED -
	DRAWN -	REVISED -
PLOT SCALE = 92.3218 ' / in.	CHECKED -	REVISED -
PLOT DATE = 4/20/2023	DATE -	REVISED -

STATE OF ILLINOIS
DEPARTMENT OF TRANSPORTATION

BATTERY BACKUP SYSTEM BLOCK AND BYPASS SWITCH DIAGRAMS

SCALE: | SHEET OF SHEETS | STA. TO STA.

F.A.I. RTE.	SECTION	COUNTY	TOTAL SHEETS	SHEET NO.
474	(72-3HB-4)BR	PEORIA	175	78
		CONTRACT NO. 68886		
		ILLINOIS	FED. AID PROJECT	

POLITI NO.	SEC	COUNTY	TOTAL SHEETS	SHEET NO.
FAI 74,474	72-12,3 Hi	PEORIA	24	15
ILLINOIS	PROJECT			

SYMBOL	STATION	ELECTRIC CABLE IN CONDUIT, 600V (XLP TYPE USE) 1/C #12 LIN.FT.	LIGHT POLE FOUNDATION EA.	LIGHT POLE, STEEL 45' PM TENON MT. EA.	LIGHT POLE, STEEL 45' PM TENON MT. TWIN EA.	LUMINAIRE SODIUM VAPOR VERTICAL MT. 400W EA.
1 1A	LT. 186+70	200	1	-	1	2
2	LT. 189+40	100	1	1		1
3	LT. 192+10	100	1	1		1
4	RT. 0+00 RAMP D	100	1	1		1
5	RT. 2+70 RAMP D	100	1	1		1
6	RT. 5+40 RAMP D	100	1	1		1
7	RT. 8+10 RAMP D	100	1	1		1
8	RT. 10+80 RAMP D	100	1	1		1
9 9A	RT. 185+00	200	1		1	2
10	RT. 182+30	100	1	1		1
11	RT. 179+60	100	1	1		1
12	RT. 176+90	100	1	1		1
13	RT. 174+20	100	1	1		1
14	RT. 24+30	100	1	1		1
15	RT. 21+60	100	1	1		1
1	LT. 208+55	100	1	1		1
2	LT. 211+25	100	1	1		1
3	LT. 205+85	100	1	1		1
4	LT. 203+15	100	1	1		1
5	LT. 198+20	100	1	1		1
6	LT. 195+90	100	1	1		1
7 7A	RT. 202+50	200	1		1	2
8 8A	RT. 200+45	200	1		1	2
9 9A	LT. 18+40 RAMP A	200	1		1	2
10	RT. 7+95 RAMP A	100	1	1		1
11	RT. 5+25 RAMP A	100	1	1		1
12	RT. 2+55 RAMP A	100	1	1		1
	TOTALS	3200	27	22	5	32

	UNIT DUCT, 2-600V XLP #6 1" POLYETHYLENE	BARE COPPER WIRE, 1/C #6	TRENCH & BACKFILL FOR RDWY LIGHTING
CONTROLLER #4			
CIRCUIT A	2,040 LIN.FT.	2120 LIN.FT.	1960 LIN.FT.
CIRCUIT B	1,580 LIN.FT.	1580 LIN.FT.	1424 LIN.FT.
CIRCUIT C	790 LIN.FT.	790 LIN.FT.	684 LIN.FT.
CONTROLLER #5			
CIRCUIT A	75 LIN.FT.	75 LIN.FT.	75 LIN.FT.
CIRCUIT B	3,775 LIN.FT.	3775 LIN.FT.	3522 LIN.FT.
TOTALS	8,260 LIN.FT.	8340 LIN.FT.	7665 LIN.FT.

CONDUIT PUSHED, 2" DIA INTERMEDIATE METAL		
FAI 474 RAMP A	STA. 20+75±	42 LIN. FT.
RAMP C	STA. 1+50±	42 LIN. FT.
C.H. 54	STA. 144+90±	54 LIN. FT.
HARMON HWY.	STA. 184+75±	102 LIN. FT.
	STA. 187+20±	106 LIN. FT.
	STA. 202+85±	97 LIN. FT.
SIDE ROAD STA. 208+25± TO 208+65±		40 LIN. FT.
STA. 209+201 TO STA. 209+36		16 LIN. FT.
TOTAL THIS SHEET		499 LIN. FT.

CONDUIT PUSHED, 3" DIA INTERMEDIATE METAL	
FAI 474 RAMP A STA. 18+60±	32 LIN. FT.
TOTAL	32 LIN. FT.

CONDUIT ATTACHED TO STRUCTURE 2" DIA GALV STEEL	
HARMON HWY. STA. 193+10± TO 193+90±	80 LIN. FT.
TOTAL	80 LIN. FT.

ELECTRIC CABLE IN CONDUIT, 600V (XLP TYPE USE) 1/C #6	
HARMON HWY. STA. 193+10± TO 193+90±	170 LIN. FT.
TOTAL	170 LIN. FT.

STGN LIGHTING (HPS)			
SYMBOL	STATION		
T-1	HARMON	STA. 206+50	34.5 LIN. FT.
T-1		STA. 191+00	29.5 LIN. FT.
T-2		STA. 181+00	33.5 LIN. FT.
B-1	FAI 474	STA. 284+25	14.0 LIN. FT.
	TOTAL THIS SHEET		111.5 LIN. FT

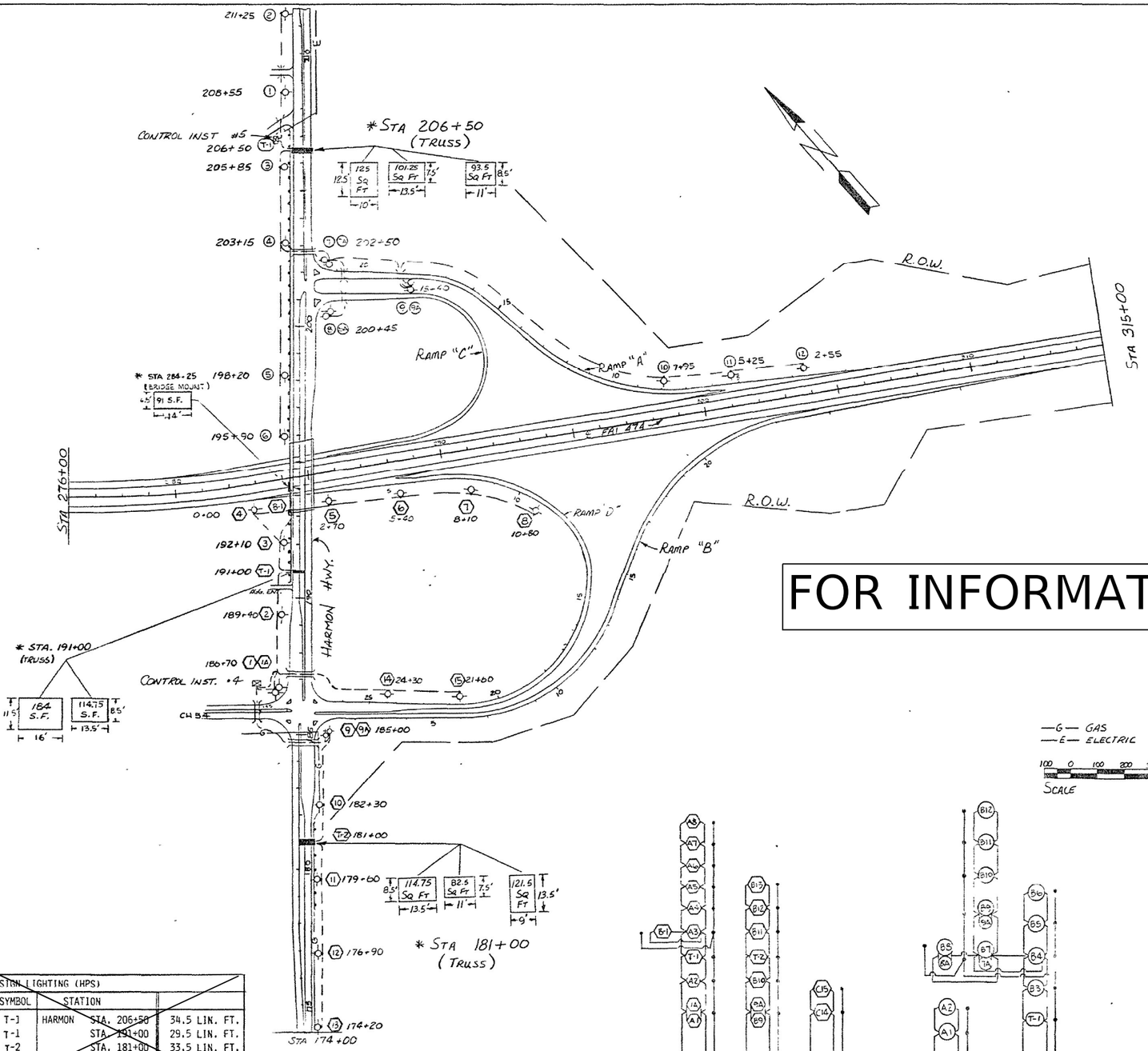

—G— GAS
—E— ELECTRIC

100 0 100 200 300
SCALE

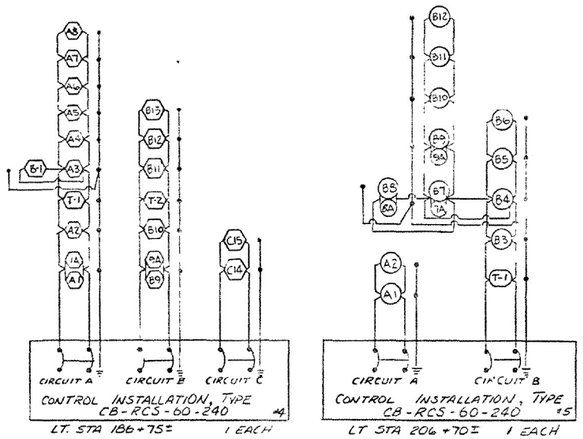

LEGEND

- HIGHWAY LIGHT
- TRUSS
- BRIDGE MOUNT
- CONTROLLER
- UNIT DUCT, 2-600 XLP #6 1" POLYETHYLENE

INTERSECTION FAI 474 WITH HARMON HWY. (FAS 389)

DISTRICT NO. 4 PEORIA

DESIGNED
DRAWN D. DRISCOLL DATE 12-18-85
CHECKED SCALE 1"=200'

* ALL EXISTING LUMINAIRES TO BE REMOVED

HARMON HWY STA 174+00 TO 209+00
FAI 474 STA 276+00 TO 315+00

MODEL: Default
FILE NAME: S:\GEN\WIN\WORD\DESIN\Hanson\# 68886 Airport Rd\68886 Airport Rd Electrical (04-20-23).dgn

USER NAME = trevor.hanson	DESIGNED -	REVISED -	
	DRAWN -	REVISED -	
PLOT SCALE = 92.3218 ' / in.	CHECKED -	REVISED -	
PLOT DATE = 4/20/2023	DATE -	REVISED -	

STATE OF ILLINOIS
DEPARTMENT OF TRANSPORTATION

EXISTING LIGHTING PLANS
I-474 & AIRPORT RD. INTERCHANGE - PEORIA COUNTY

SCALE: SHEET OF SHEETS STA. TO STA.

F.A.I. RTE.	SECTION	COUNTY	TOTAL SHEETS	SHEET NO.
474	(72-3HB-4)BR	PEORIA	175	79
		CONTRACT NO. 68886		
	ILLINOIS	FED. AID PROJECT		

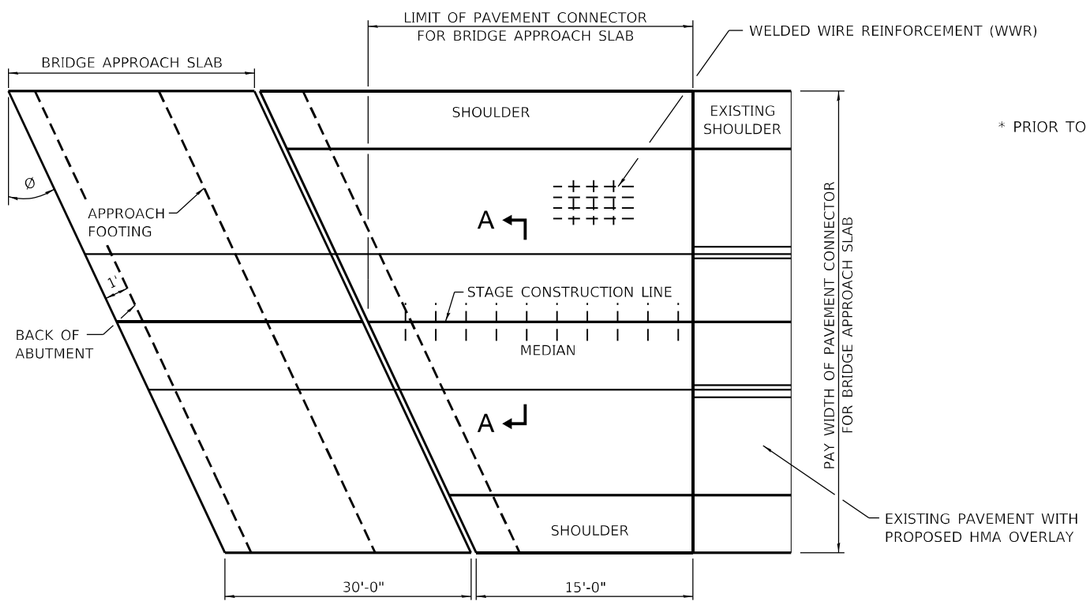

PLAN

* PRIOR TO GRINDING

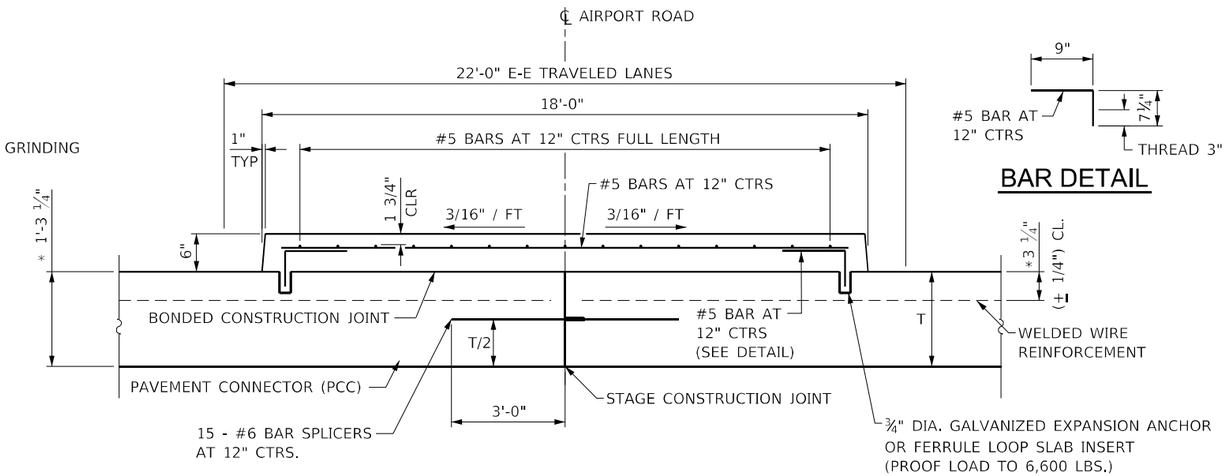

SECTION A-A

BAR DETAIL

GENERAL NOTES

1. FOR ADDITIONAL DETAILS SEE PAVEMENT CONNECTOR (PCC) FOR BRIDGE APPROACH STANDARD 420401.
2. MEDIAN INCLUDED IN COST OF PAVEMENT CONNECTOR (PCC) FOR BRIDGE APPROACH SLAB.
3. REINFORCEMENT, EXPANSION ANCHORS, INSERTS AND BAR SPLICERS INCLUDED IN COST OF PAVEMENT CONNECTOR (PCC) FOR BRIDGE APPROACH SLAB.
4. WWR SHALL BE 0.11 SQ. IN./FT. IN BOTH DIRECTIONS. MAXIMUM WIRE SPACING SHALL BE 6". MINIMUM LAP DISTANCE SHALL BE TWO CROSS WIRES.

SOUTH APPROACH

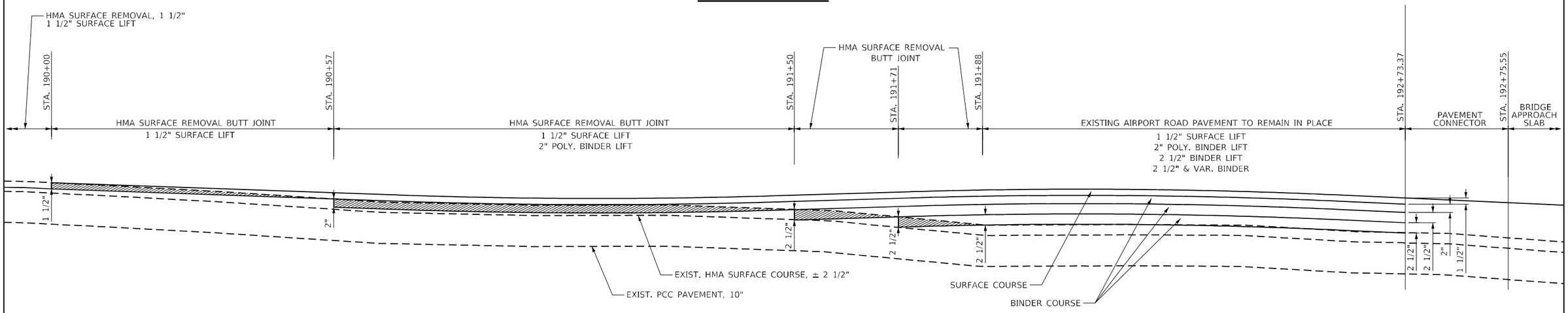

190+00	190+10		190+50			191+00						191+50					192+00					192+50			192+73.37
641.64	641.61	641.57	641.54	641.50	641.46	641.43	641.39	641.36	641.34	641.33	641.32	641.33	641.34	641.36	641.39	641.42	641.45	641.48	641.50	641.51	641.51	641.51	641.49	641.47	641.44	641.39	641.35	641.33

PROPOSED PROFILE ELEVATIONS EVERY 10'

NOTE: HMA LIFTS SHOULD CONFORM TO THE VERTICAL CURVATURE OF THE PROPOSED PROFILE.

LEGEND

HMA SURFACE REMOVAL BUTT JOINT

NORTH APPROACH

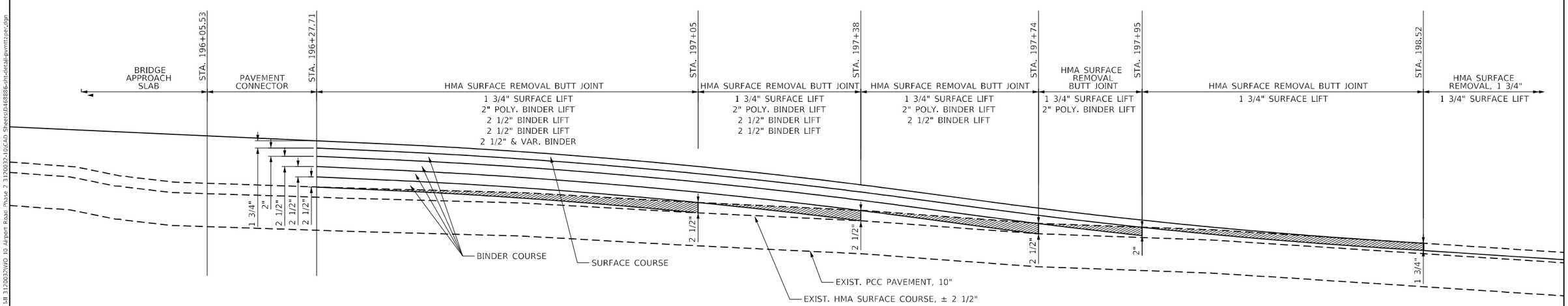

196+27.71	196+30		196+50					197+00						197+50					198+00					198+50	198+52
639.73	639.72	639.68	639.63	639.57	639.50	639.43	639.35	639.26	639.16	639.05	638.94	638.81	638.68	638.55	638.42	638.30	638.18	638.07	637.98	637.89	637.81	637.74	637.67	637.66	

PROPOSED PROFILE ELEVATIONS EVERY 10'

MODEL: Default
FILE NAME: P:\Civil\ IDOT DISTAIPTB 194-035 var PH I-II 3120032\WO 10 Airport Road Phase 2 3120032-10\CAD Sheets\0468886-sht-detail-pvmttaper.dgn

The Upchurch Group architects engineers surveyors Professional Design Firm Corporation License No. 184-003-001 123 North 15th Street Mattoon, IL 61938 Phone: 217.235.3177 e-mail: upchurchgroup@upchurchgroup.com	USER NAME = Sta42	DESIGNED - MJS	REVISED -	STATE OF ILLINOIS DEPARTMENT OF TRANSPORTATION	PAVEMENT TAPER DETAILS AIRPORT ROAD OVER I-474	F.A.I. RTE. 474	SECTION (72-3HB-4)BR
	TUG PROJECT NO. 3120032-10	DRAWN -	REVISED -			COUNTY PEORIA	TOTAL SHEETS 175 / SHEET NO. 81
	PLOT SCALE = 20.0000 ' / in.	CHECKED - MJS	REVISED -			CONTRACT NO. 68886	
	PLOT DATE = 6/21/2023	DATE -	REVISED -		SCALE: 20.0000 ' / in. SHEET OF SHEETS STA. TO STA.	ILLINOIS	FED. AID PROJECT

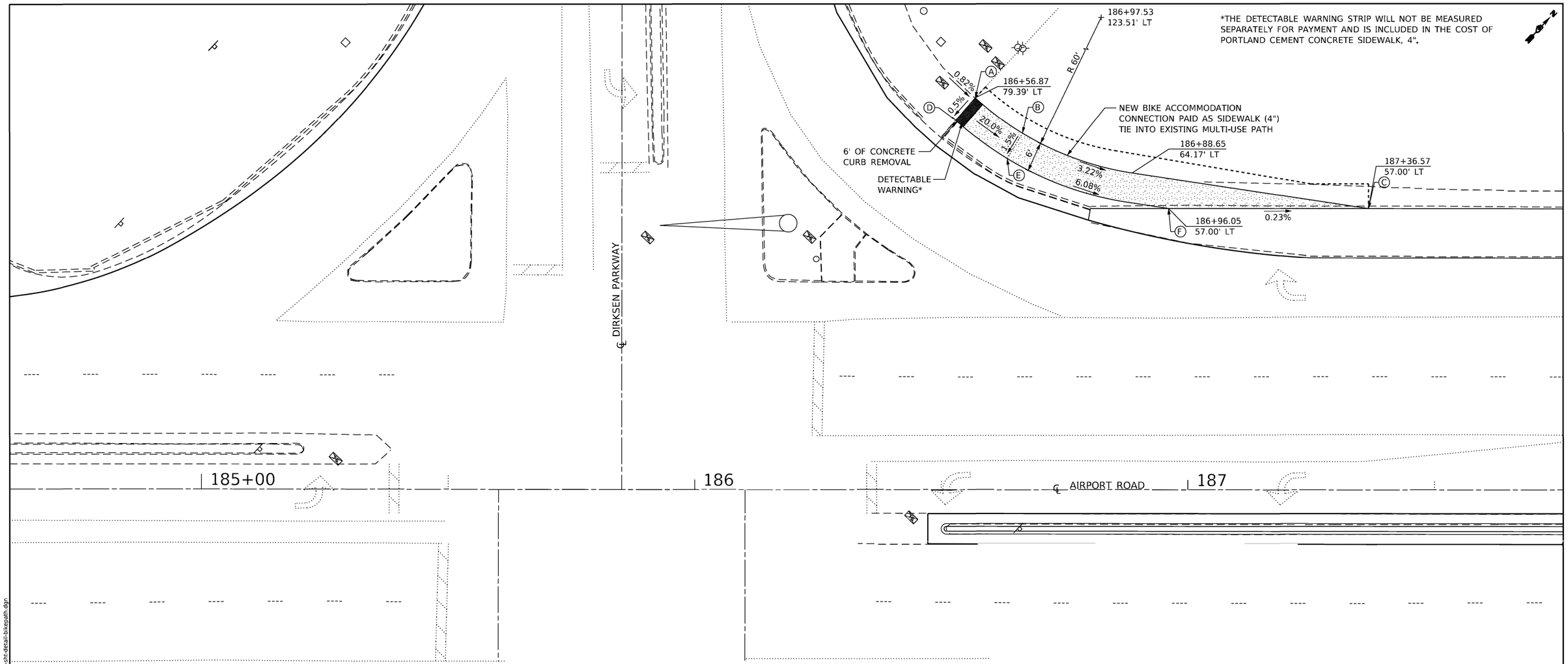

PLAN

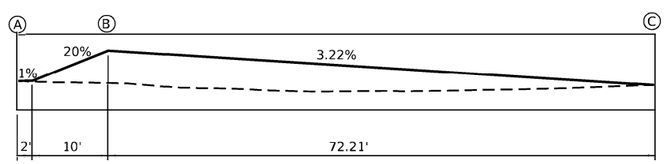

PROFILE – WEST EDGE OF CONNENCTION

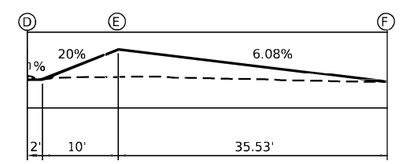

PROFILE – EAST EDGE OF CONNECTION

MODEL: Default
FILE NAME: P:\Civil_IDOT DISTA\PTB 194-035 var PH I,II 3120032\WO 10 Airport Road Phase 2 3120032-10\CAD Sheets\D468886-sht-detail-bikepath.dgn

The Upchurch Group architects engineers surveyors Professional Design Firm Corporation License No. 184-003401 123 North 15th Street Mattoon, IL 61938 Phone: 217.235.3177 e-mail: upchurchgroup@upchurchgroup.com	USER NAME = Sta42	DESIGNED - MJS	REVISED -	STATE OF ILLINOIS DEPARTMENT OF TRANSPORTATION	BIKE FACILITY DETAIL AIRPORT ROAD OVER I-474	F.A.I. RTE.	SECTION	COUNTY	TOTAL SHEETS	SHEET NO.
	TUG PROJECT NO. 3120032-10	DRAWN - SAE	REVISED -			474	(72-3HB-4)BR	PEORIA	175	82
	PLOT SCALE = 20.0000 ' / in.	CHECKED - MJS	REVISED -					CONTRACT NO. 68886		
	PLOT DATE = 6/21/2023	DATE -	REVISED -		SCALE: 20.0000 ' / in SHEET OF SHEETS STA. TO STA.		ILLINOIS	FED. AID PROJECT		

RELOCATE SIGN SCHEDULE				
LOCATION	STATION	72400330	72400730	73000100
		REMOVE SIGN PANEL - TYPE 3	RELOCATE SIGN COMPLETE	WOOD SIGN SUPPORT
		SQ FT	SQ FT	FOOT
I-474	282+00	91.0	91.0	160.0
	TOTALS	**91.0**	**91.0**	**160.0**

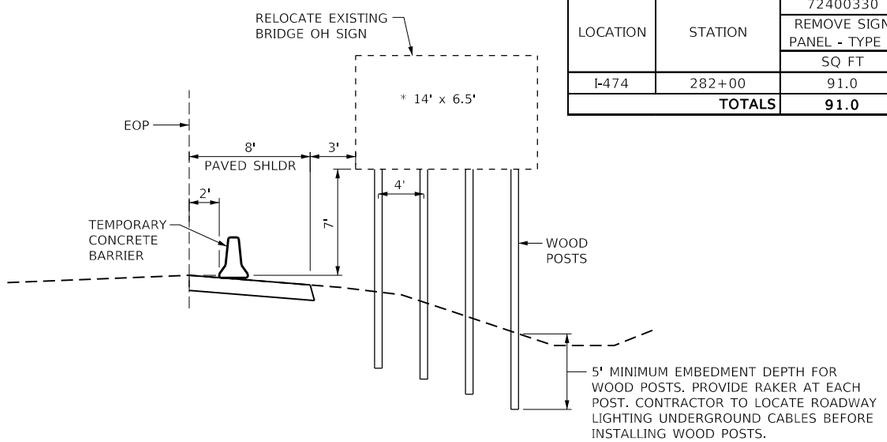

* CONTRACTOR TO VERIFY EXISTING SIGN DIMENSIONS BEFORE ORDERING WOOD POSTS

TEMPORARY GROUND MOUNT EXISTING BRIDGE MOUNTED OVERHEAD SIGN PANEL – TYPE 3

I-474 STA. 282+00 RT

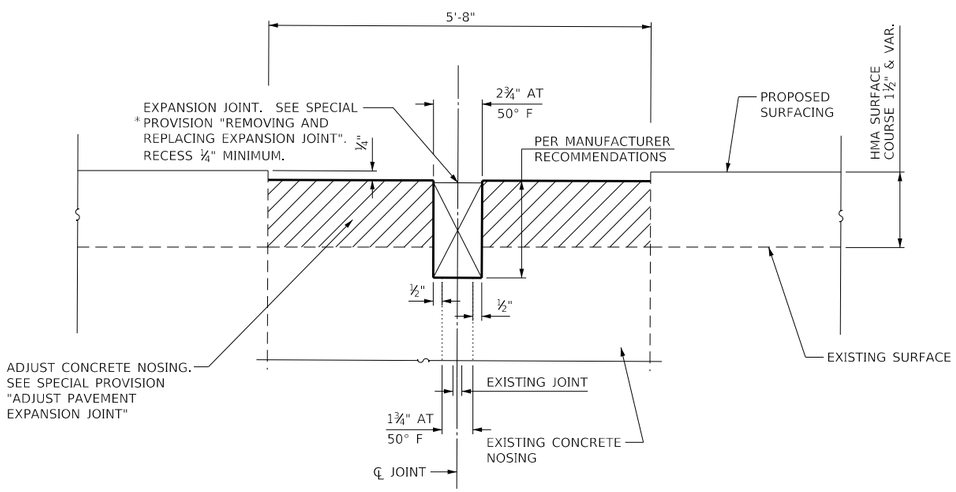

PAVEMENT EXPANSION JOINT DETAIL

(STA: 191+00 RT. & STA:190+00 LT.)
NOTE: ADJUSTMENT OF CONCRETE NOSING WILL NOT BE REQUIRED AT JOINT 190+00 LT.

SIGN PANEL SCHEDULE		
LOCATION	STATION	72000300
		SIGN PANEL - TYPE 3
		SQ FT
I-474	282+00	75.0
	TOTAL	**75.0**

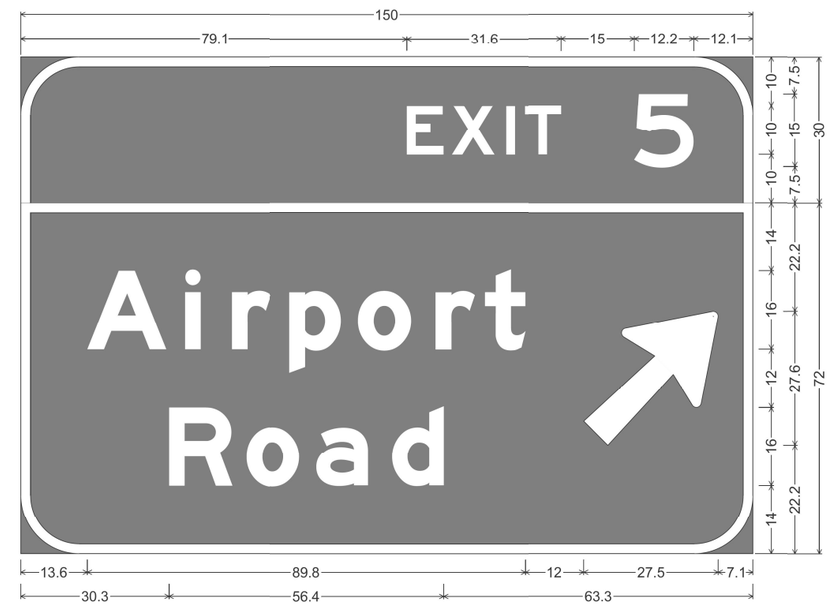

Sign Location 19;
Quantity : 1;
Sign # : Sign "R";
12.0" Radius, 2.0" Border, White on Green;
"EXIT", E 2K 120% spacing; "5", E 2K;

12.0" Radius, 2.0" Border, White on Green;
"Airport", E Mod 2K; "Road", E Mod 2K; Arrow 160 - 35.0" 45°;
Table of distances between letter and object lefts

79.1	E 9.2	X 11.1	I 3.8	T 22.5	5 12.2	12.1				
13.6	A 20.0	i 9.6	r 11.9	p 14.0	o 15.9	r 10.1	t 20.3	↗ 27.5	7.1	
30.3	R 15.9	o 14.4	a 15.5	d 10.6	63.3					

NEW BRIDGE MOUNTED OVERHEAD SIGN PANEL

MODEL: Default
FILE NAME: P:\Civil\IDOT DIST4\PTB 194-035 var PH I-II 3120032\WO 10 Airport Road Phase 2 3120032-10\CAD Sheets\D468886-sht-detail-sign.dgn

The Upchurch Group
architects engineers surveyors
Professional Design Firm Corporation
License No. 184-003401
123 North 15th Street
Mattoon, IL 61938
Phone: 217.235.3177
e-mail: upchurchgroup@upchurchgroup.com

USER NAME = Sta42	DESIGNED - MJS	REVISED -	
TUG PROJECT NO. 3120032-10	DRAWN - SAE	REVISED -	
PLOT SCALE = 100.0000 ' / in.	CHECKED - MJS	REVISED -	
PLOT DATE = 6/19/2023	DATE -	REVISED -	

STATE OF ILLINOIS
DEPARTMENT OF TRANSPORTATION

SIGN AND EXPANSION JOINT
AIRPORT ROAD OVER I-474

SCALE: 100.0000 ' / in. SHEET OF SHEETS STA. TO STA.

F.A.I. RTE.	SECTION	COUNTY	TOTAL SHEETS	SHEET NO.
474	(72-3HB-4)BR	PEORIA	175	83
		CONTRACT NO. 68886		
	ILLINOIS	FED. AID PROJECT		

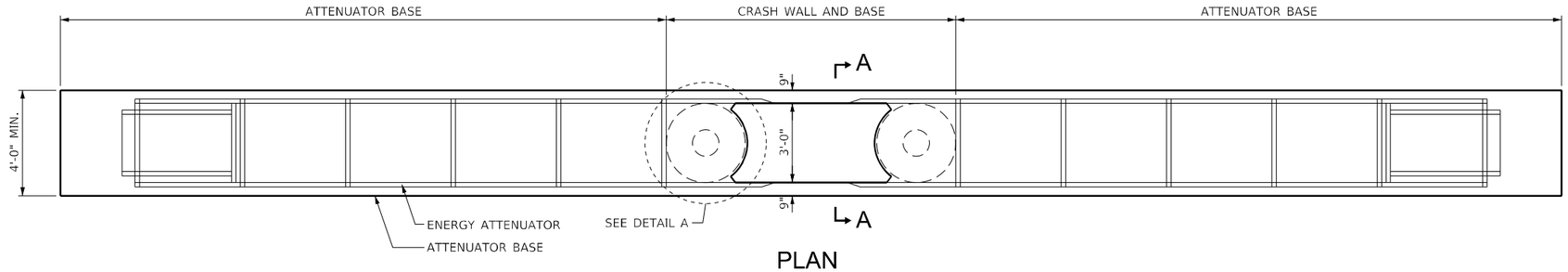

PLAN

AIRPORT ROAD STA. 191+50

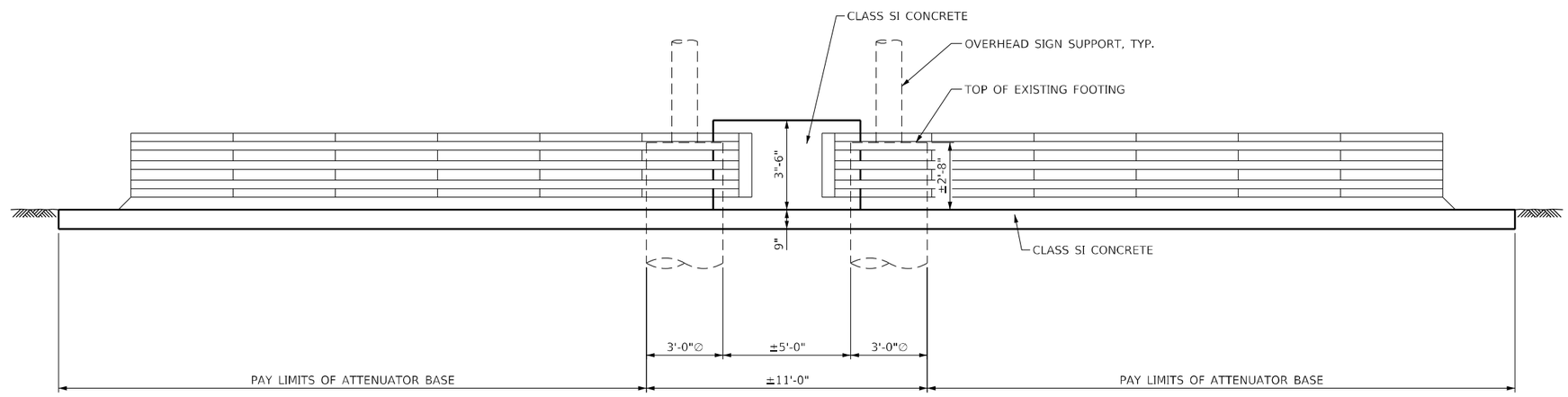

ELEVATION

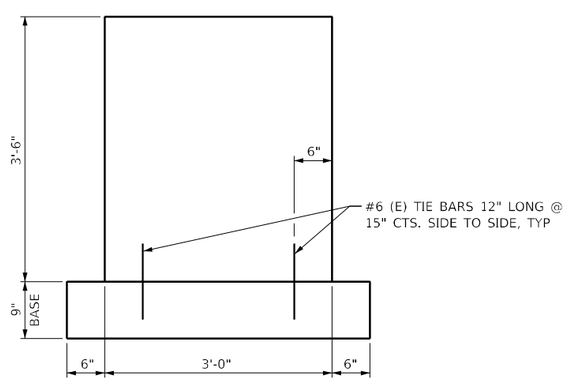

SECTION A-A

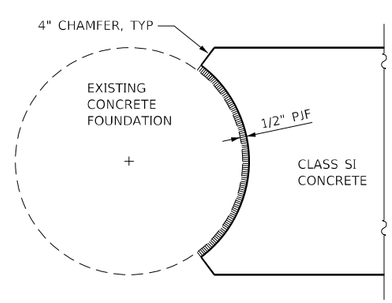

DETAIL A

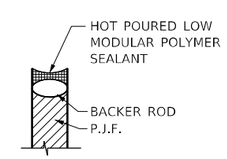

SEALANT DETAIL

NOTES:

1. THE CRASH WALL AND THE ATTENUATOR BASES SHALL BE CONSTRUCTED OF CLASS SI CONCRETE IN ACCORDANCE WITH SECTIONS 503 AND 637 OF THE STANDARD SPECIFICATIONS. THE CONCRETE WILL BE PAID FOR AT THE CONTRACT UNIT PRICE PER CUBIC YARD FOR CLASS SI CONCRETE.
2. TIE BARS SHALL CONFORM TO STANDARD SPECIFICATIONS ARTICLE 1006.10. BARS DESIGNATED "(E)" SHALL BE EPOXY COATED. TIE BARS WILL NOT BE PAID FOR SEPARATELY.
3. EXPOSED CONCRETE EDGES SHALL HAVE 3/4" X 3/4" CHAMFERS.
4. CONCRETE SEALANT SHALL BE APPLIED TO THE EXPOSED SURFACES OF THE NEW CRASH WALL. CONCRETE SEALANT WILL NOT BE PAID FOR SEPARATELY.

The Upchurch Group
architects engineers surveyors
Professional Design Firm Corporation License No. 184-001001
123 North 15th Street Mattoon, IL 61938 Phone: 217.235.3177
e-mail: upchurchgroup@upchurchgroup.com

USER NAME = Sta42	DESIGNED - MJS	REVISED -
TUG PROJECT NO. 3120032-10	DRAWN - SAE	REVISED -
PLOT SCALE = 4.0000 ' / in.	CHECKED - MJS	REVISED -
PLOT DATE = 6/19/2023	DATE -	REVISED -

STATE OF ILLINOIS
DEPARTMENT OF TRANSPORTATION

EXISTING OVERHEAD SIGN CRASH WALL
AIRPORT ROAD OVER I-474

SCALE: 4.0000 ' / in. | SHEET OF SHEETS | STA. TO STA.

F.A.I. RTE.	SECTION	COUNTY	TOTAL SHEETS	SHEET NO.
474	(72-3HB-4)BR	PEORIA	175	84

CONTRACT NO. 68886

ILLINOIS | FED. AID PROJECT

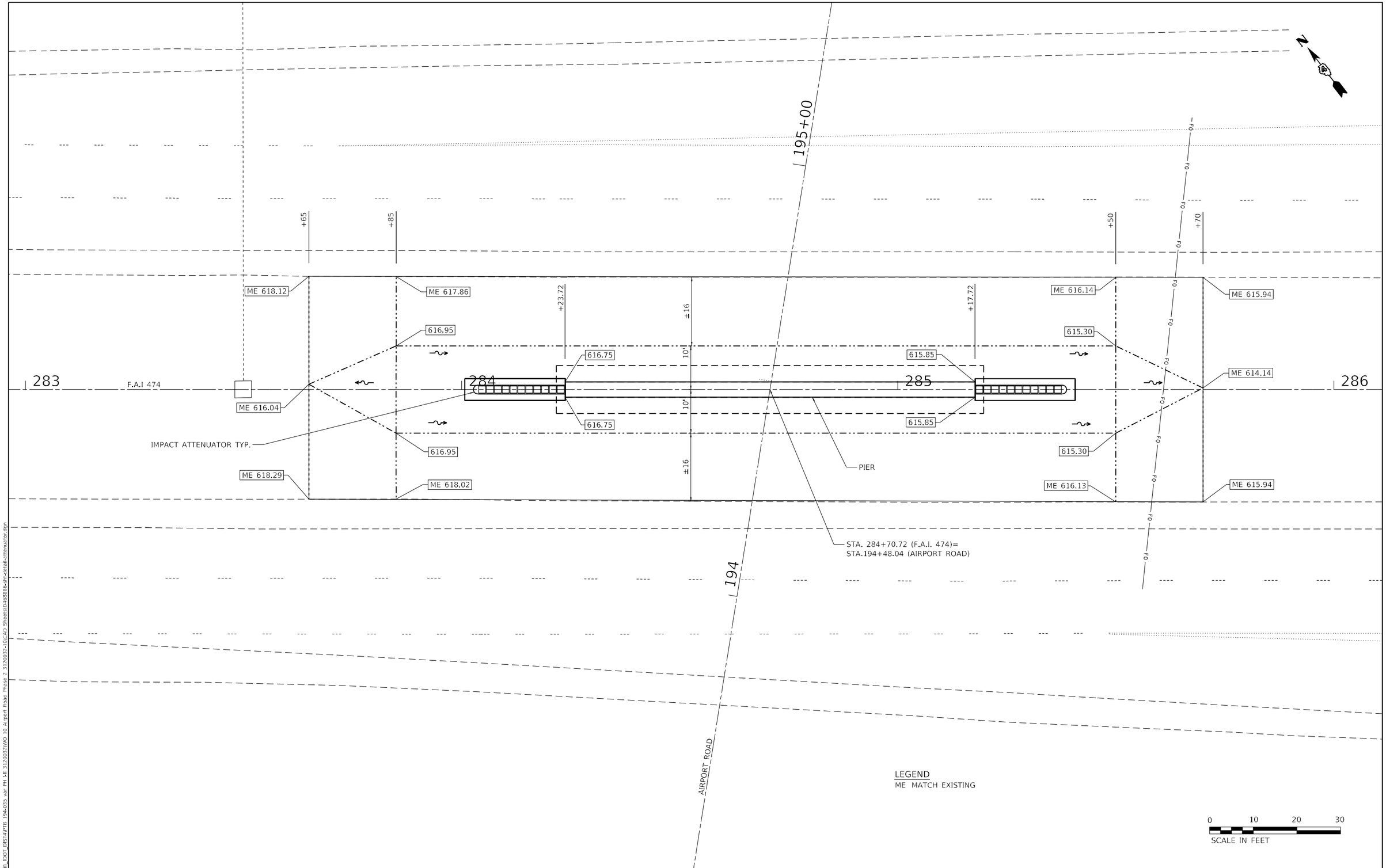

MODEL: Default
FILE NAME: P:\Civil_IDOT_DIST4\PTB 194-033 var PH I-II 3120032\WO 10 Airport Road Phase 2 3120032-10\CAD Sheets\D468886-sht-detail-attenuator.dgn

The Upchurch Group architects engineers surveyors Professional Design Firm Corporation License No. 184-003-001 123 North 15th Street Mattoon, IL 61938 Phone: 217.235.3177 e-mail: upchurchgroup@upchurchgroup.com	USER NAME = Sta42	DESIGNED - MJS	REVISED -	STATE OF ILLINOIS DEPARTMENT OF TRANSPORTATION	PIER AND IMPACT ATTENUATOR GRADING DETAIL AIRPORT ROAD OVER I-474	F.A.I. RTE.	SECTION	COUNTY	TOTAL SHEETS	SHEET NO.
	TUG PROJECT NO. 3120032-10	DRAWN - TLW	REVISED -			474	(72-3HB-4)BR	PEORIA	175	85
	PLOT SCALE = 20.0000 ' / in.	CHECKED - MJS	REVISED -					CONTRACT NO. 68886		
	PLOT DATE = 6/19/2023	DATE -	REVISED -		SCALE: 20.0000 ' / in. SHEET OF SHEETS STA. TO STA.		ILLINOIS	FED. AID PROJECT		

Bench Mark (BM 100) : Chiseled "□" in center of concrete island median, at onramp entrance to WB I-474 off Airport Road at Sta. 201+13, 52' Rt., Elev. 635.855.

Existing Structure: Existing structure S.N. 072-0126 built in 1978 as FAI 474, Section (72-3)I. The Structure is a two span 48" web plate steel girder bridge with a reinforced concrete deck supported on reinforced concrete vaulted abutments with PPC I-beams, and RC Pier. The abutments and piers have spread footing foundations and the approach bents are supported on steel H-Piles. The existing structure is skewed 9°03'25" right forward, Bk to Bk Approach Bents 261'-5", Out to Out superstructure width 92'-0" with 18'-0" raised median and longitudinal expansion joint. HMA overlay of bridge deck in 2012. Structure to be removed and replaced. Traffic will be maintained using crossovers.

No Salvage.

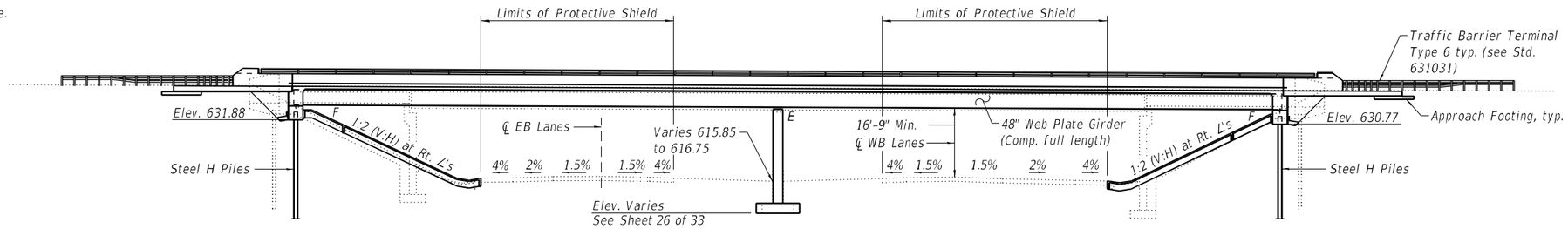

ELEVATION

Notes:
See Sheet 2 of 33 for section A-A.
Up to ¼" may be ground off the bridge deck and the bridge approach slabs.

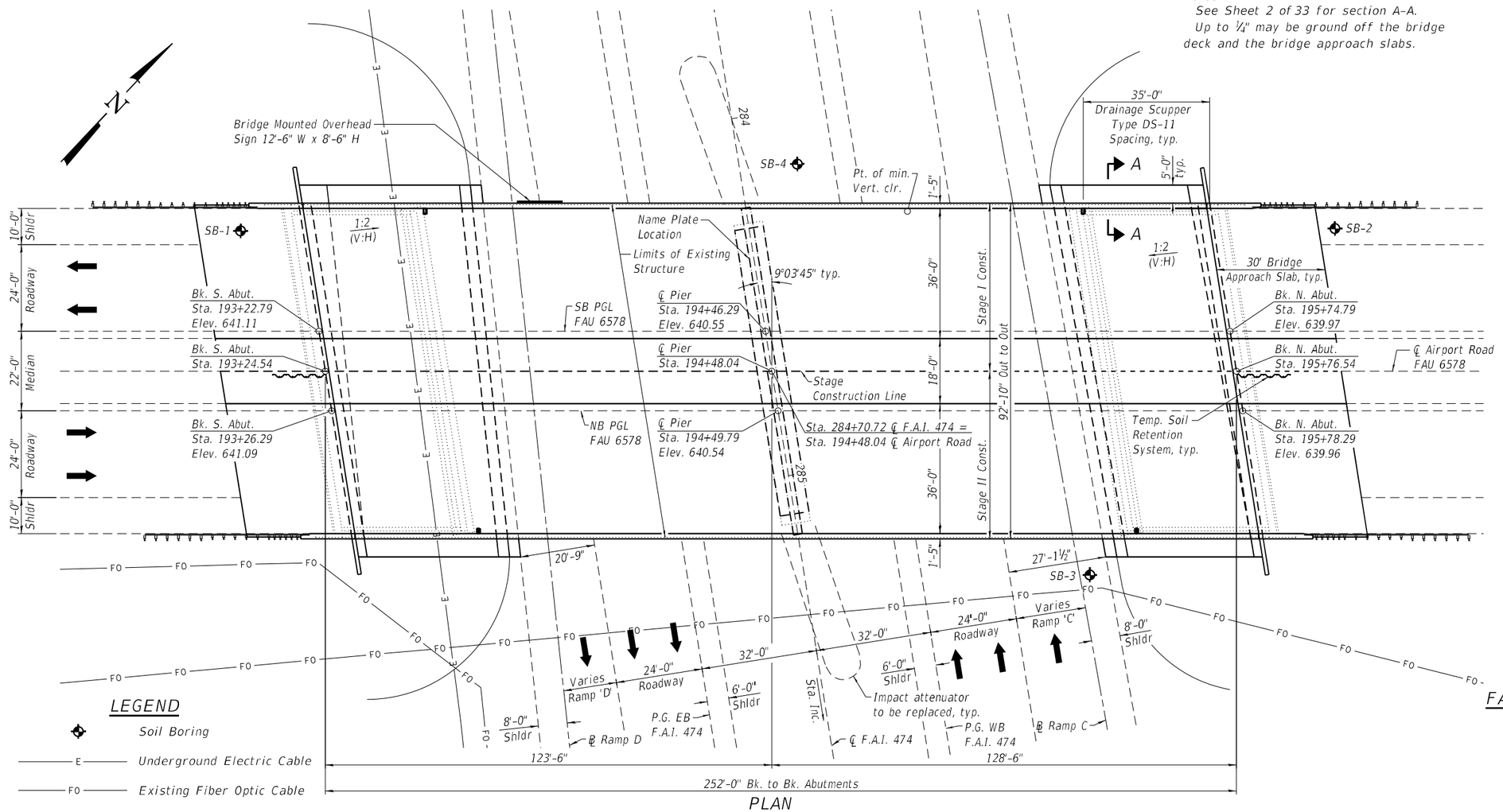

PLAN

LEGEND

- Soil Boring
- E — Underground Electric Cable
- FO — Existing Fiber Optic Cable

DESIGN STRESSES

FIELD UNITS

f'c = 3,500 psi
f'c = 4,000 psi (Superstructure concrete)
fy = 60,000 psi (Reinforcement)
fy = 50,000 psi (M270 Grade 50)

LOADING HL-93

Allow 50#/sq. ft. for future wearing surface.

SEISMIC DATA

Seismic Performance Zone (SPZ) = 1
Design Spectral Acceleration at 1.0 sec. (SD1) = 0.113g
Design Spectral Acceleration at 0.2 sec. (SDS) = 0.176g
Soil Site Class = D

DESIGN SPECIFICATIONS

2020 AASHTO LRFD Bridge Design Specifications, 9th Edition

LICENSED STRUCTURAL ENGINEER MICHAEL T. HALEY 081-005991 CHATHAM STATE OF ILLINOIS

Michael T. Haley 06/21/2023

Michael T. Haley — Date
Licensed Structural Engineer
State of Illinois No. 081-005991
Expires 11/30/2024

APPROVED
For Structural Adequacy Only
Engineer of Bridges & Structures

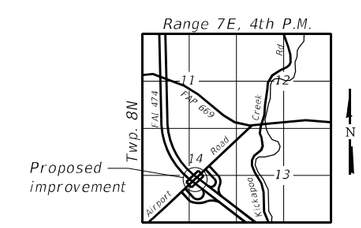

LOCATION SKETCH

GENERAL PLAN & ELEVATION
FAU 6578 (AIRPORT ROAD) OVER F.A.I. 474
SECTION (72-3HB-4)BR
PEORIA COUNTY
STA. 284+70.72
STRUCTURE NO. 072-0254

LIN ENGINEERING, LTD.
Consulting Engineers
Springfield, Illinois

USER NAME =	DESIGNED - CZ	REVISED -	
	CHECKED - CL	REVISED -	
PLOT SCALE =	DRAWN - AJF	REVISED -	
PLOT DATE = 6/21/2023	CHECKED - MTH	REVISED -	

STATE OF ILLINOIS
DEPARTMENT OF TRANSPORTATION

SHEET 1 OF 33 SHEETS

F.A.U. RTE.	SECTION	COUNTY	TOTAL SHEETS	SHEET NO.
6578	(72-3HB-4)BR	PEORIA	175	86
		CONTRACT NO. 68886		
	ILLINOIS	FED. AID PROJECT		

MODEL: Default
FILE NAME: E:\2125-3\Final Design\Design Plans\CADD_Sheets\0720254-68886-001-GPE.dgn
6/21/2023 10:37:38 AM

GENERAL NOTES

Fasteners shall be ASTM F 3125 Grade A325 Type 1, mechanically galvanized bolts. Bolts 7/8 in. Ø, holes 15/16 in. Ø, unless otherwise noted.

Calculated weight of Structural Steel = 764,400 lbs (AASHTO M270, Grade 50)
45,640 lbs (AASHTO M270, Grade 36)

No field welding is permitted except as specified in the contract documents.

Reinforcement bars designated (E) shall be epoxy coated.

Bearing seat surfaces shall be constructed or adjusted to the designated elevations within a tolerance of 1/8 in. (0.01 ft.). Adjustment shall be made either by grinding the surface or by shimming the bearings.

The existing structural steel coating contains lead. The Contractor shall take appropriate precautions to deal with the presence of lead on this project.

The Inorganic Zinc Rich Primer / Acrylic / Acrylic Paint System shall be used for shop and field painting of new structural steel except where otherwise noted. The color of the final finish coat for all interior steel surfaces shall be gray, Munsell No. 5B 7/1. The color of the final finish coat for the exterior and bottom flange of the fascia beams shall be Blue, Munsell No. 10B 3/6.

Slip forming of the parapets is not allowed.

INDEX OF SHEETS

TOTAL BILL OF MATERIAL

	ITEM	UNIT	SUPER	SUB	TOTAL
	Removal of Existing Structures	Each	1	-	1
	Protective Shield	Sq. Yd.	1,077	-	1,077
	Structure Excavation	Cu. Yd.	-	1,345	1,345
	Rock Excavation for Structures	Cu. Yd.	-	8	8
	Concrete Structures	Cu. Yd.	-	525.1	525.1
	Concrete Superstructure	Cu. Yd.	903.7	-	903.7
⊛	Protective Coat	Sq. Yd.	3,693	-	3,693
	Concrete Superstructure (Approach Slab)	Cu. Yd.	260.4	-	260.4
	Furnishing and Erecting Structural Steel	Lump Sum	1	-	1
	Stud Shear Connectors	Each	14,910	-	14,910
	Reinforcement Bars, Epoxy Coated	Pound	288,340	71,510	359,850
	Bar Splicers	Each	1,064	54	1,118
	Mechanical Splicers	Each	-	184	184
	Parapet Railing	Foot	534	-	534
	Slope Wall 4 Inch	Sq. Yd.	-	1,112	1,112
	Furnishing Steel Piles HP12x63	Foot	-	798	798
	Driving Piles	Foot	-	798	798
	Test Pile Steel HP12x63	Each	-	1	1
	Pile Shoes	Each	-	28	28
	Name Plates	Each	-	1	1
	Elastomeric Bearing Assembly, Type I	Each	14	-	14
	Anchor Bolts, 1"	Each	-	56	56
	Anchor Bolts, 1½"	Each	-	28	28
	Temporary Soil Retention System	Sq. Ft.	-	196	196
	Granular Backfill for Structures	Cu. Yd.	-	364	364
	Geocomposite Wall Drain	Sq. Yd.	-	180	180
	Pipe Underdrains for Structures 4"	Foot	-	262	262
	Overhead Sign Structure-Bridge Mounted	Foot	13	-	13
⊛	Bridge Deck Grooving (Longitudinal)	Sq. Yd.	2,571	-	2,571
	Drainage Scuppers, DS-11	Each	4	-	4
⊛	Diamond Grinding (Bridge Section)	Sq. Yd.	2,420	-	2,420

⊛Quantity includes Bridge Approach Slabs and Pavement Connector (PCC) for Bridge Approach Slabs.

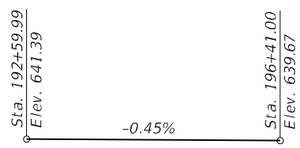

PROFILE GRADE FAU 6578
(SB and NB P.G.)

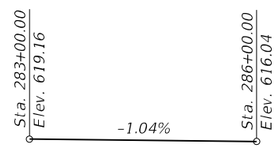

PROFILE GRADE F.A.I. 474
(EB and WB P.G.)

The profile grade shows the final elevations after grinding.

STATION 284+70.72
BUILT 20__ BY
STATE OF ILLINOIS
F.A.U. RT. 6578 SEC. (72-3HB-4)BR
LOADING HL-93
STRUCTURE NO. 072-0254

NAME PLATE
See Std. 515001

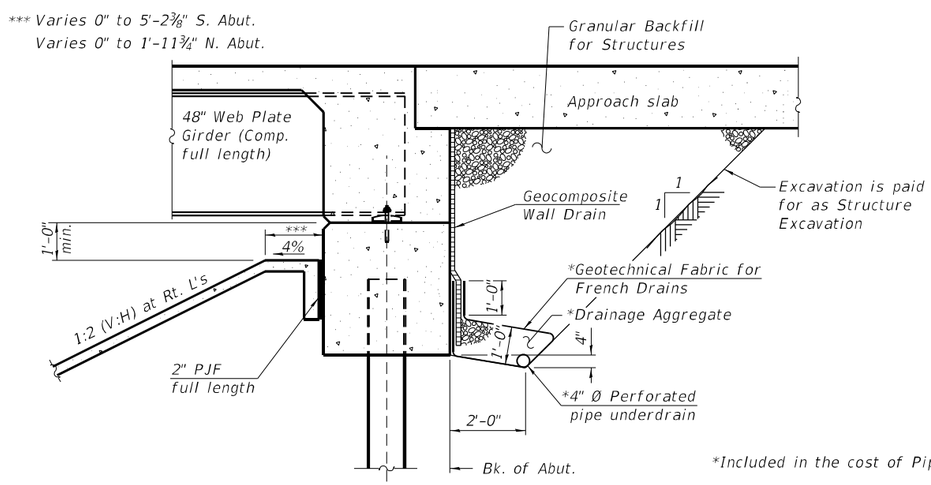

SECTION THRU INTEGRAL ABUTMENT
(Horiz. dim. at Rt. ∠'s)

*Included in the cost of Pipe Underdrains for Structures.

Note:
All drainage system components shall extend to 2'-0" from the end of each wingwall except an outlet pipe shall extend until intersecting with the side slopes. The pipes shall drain into concrete headwalls. (See Article 601.05 of the Standard Specifications and Highway Standard 601101).

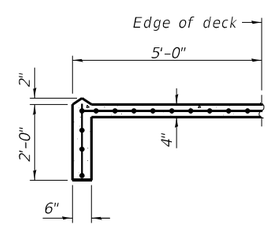

SECTION A-A

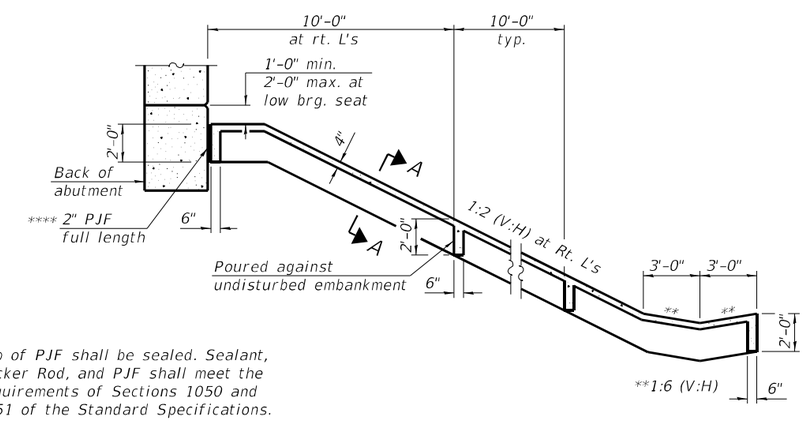

****Top of PJF shall be sealed. Sealant, Backer Rod, and PJF shall meet the requirements of Sections 1050 and 1051 of the Standard Specifications.

SECTION THRU CONCRETE SLOPEWALL

Note:
Slope wall shall be reinforced with galvanized welded wire fabric, 6 in. x 6 in. - W4.0 x W4.0, weighing 58 lbs. per 100 sq. ft.

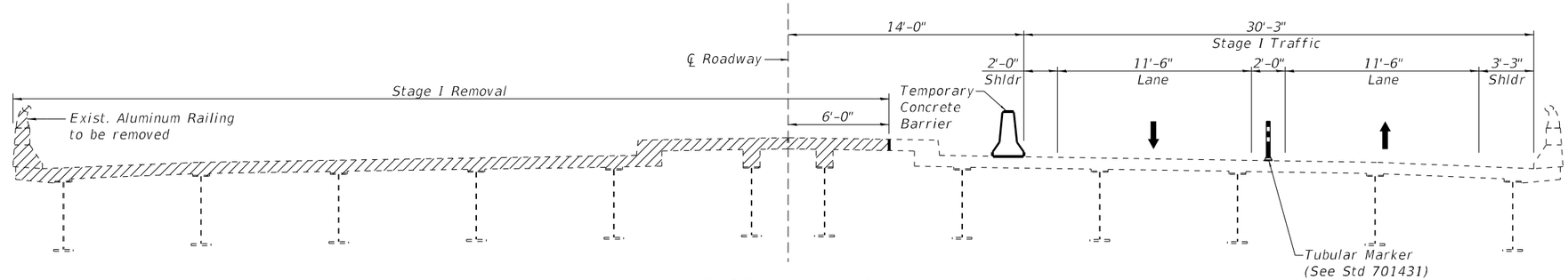

STAGE I REMOVAL

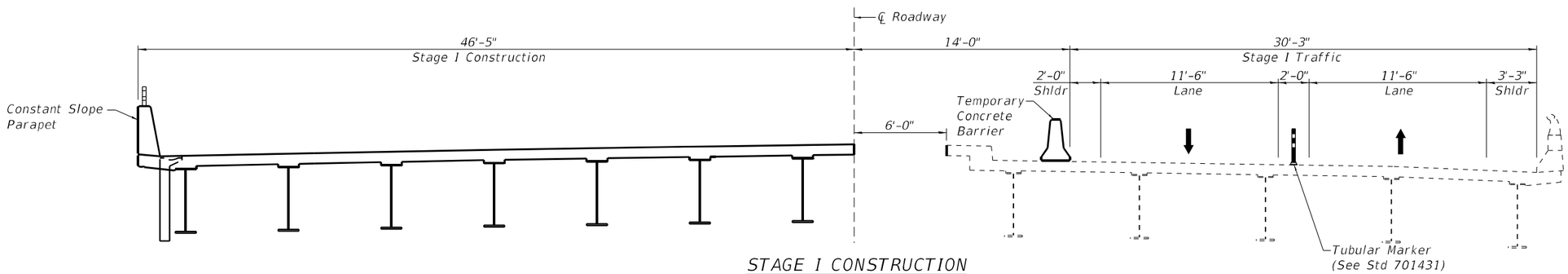

STAGE I CONSTRUCTION

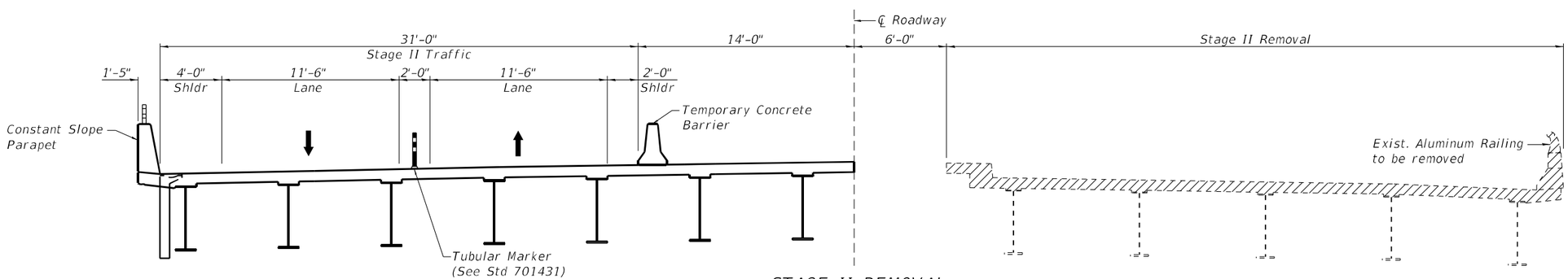

STAGE II REMOVAL

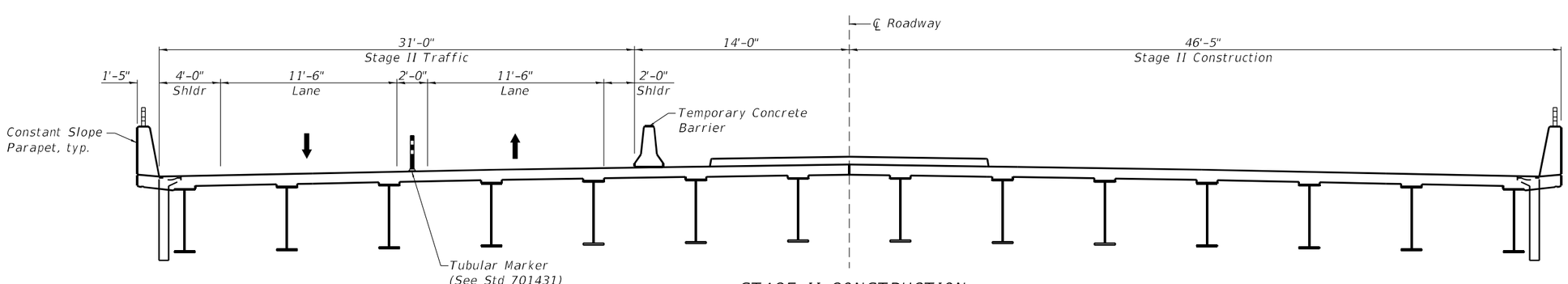

STAGE II CONSTRUCTION

Notes:

Raised Median to be poured during Stage II Construction.

Hatching represents limits of removal.

All sections are looking North.

See sheet 5 of 33 for Temporary Concrete Barrier Details. See Roadway plans for quantity of Temporary Concrete Barrier and Tubular Markers.

Cost of removing existing aluminum railing included with cost of Removal of Existing Structures.

See sheet 26 of 33 for stage construction line of pier crash wall and footing.

(Sheet 1 of 2)

MODEL: Default
FILE NAME: E:\2125-3\Final Design\Design Plans\CADD_Sheets\0720254-68886-003-StageConstructionDetails.dgn

6/21/2023 10:37:39 AM

LIN ENGINEERING, LTD. Consulting Engineers Springfield, Illinois	USER NAME =	DESIGNED - CZ	REVISED -	STATE OF ILLINOIS DEPARTMENT OF TRANSPORTATION	STAGE CONSTRUCTION DETAILS STRUCTURE NO. 072-0254
		CHECKED - CL	REVISED -		
	PLOT SCALE =	DRAWN - AGJ	REVISED -		
	PLOT DATE = 6/21/2023	CHECKED - MTH	REVISED -		SHEET 3 OF 33 SHEETS

F.A.U. RTE.	SECTION	COUNTY	TOTAL SHEETS	SHEET NO.
6578	(72-3HB-4)BR	PEORIA	175	88
		CONTRACT NO. 68886		
	ILLINOIS	FED. AID PROJECT		

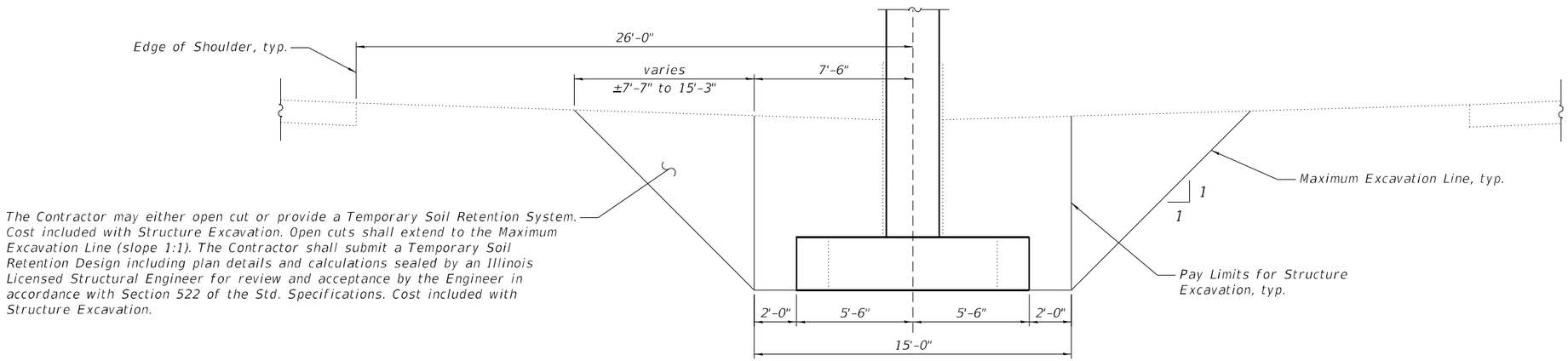

PIER END VIEW

(Horiz. dims. at Rt. ℄'s)

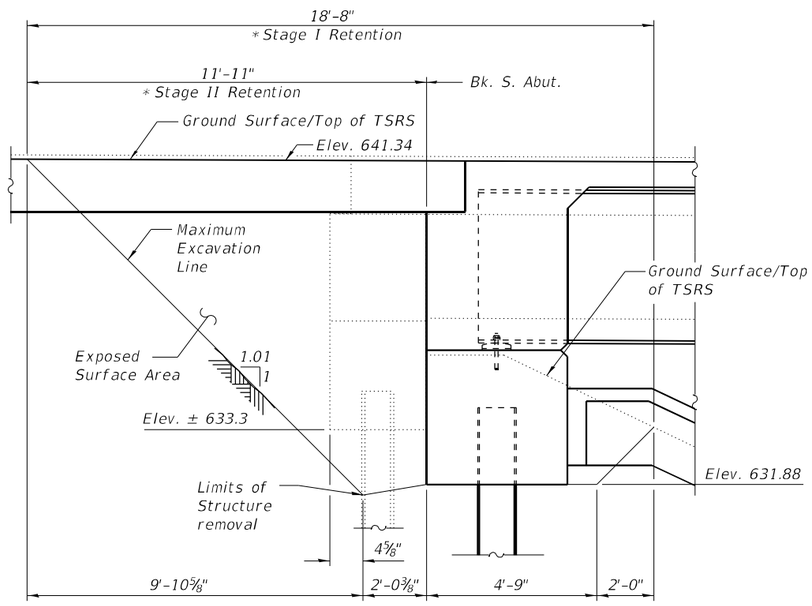

TEMPORARY SOIL RETENTION SYSTEM AT SOUTH ABUTMENT

(Looking West)
(Dimensions are measured along ℄ Roadway)

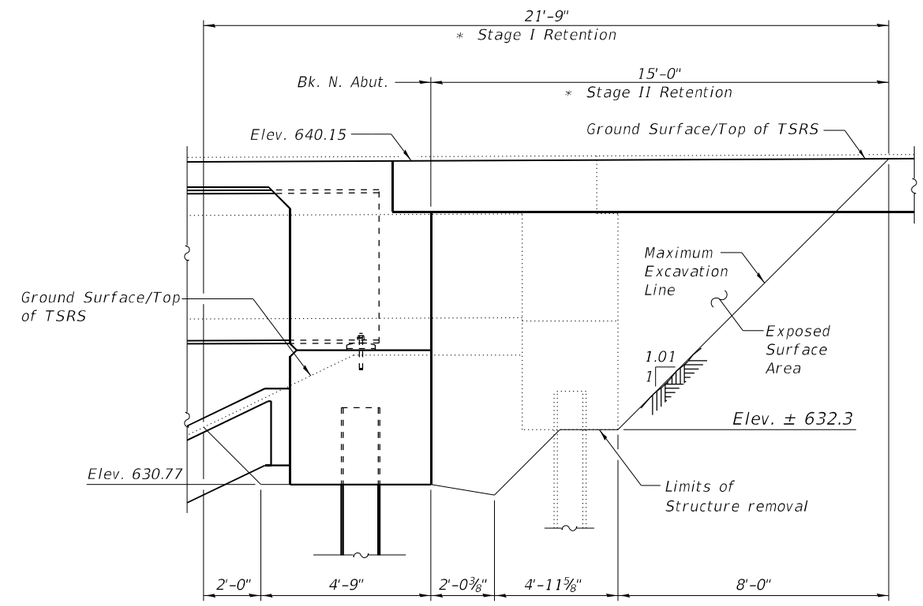

TEMPORARY SOIL RETENTION SYSTEM AT NORTH ABUTMENT

(Looking West)
(Dimensions are measured along ℄ Roadway)

* A cantilevered sheet piling design does not appear feasible and additional members or other retention systems may be necessary. The Contractor shall submit a temporary soil retention system design including plan details and calculations for review and acceptance by the Engineer.

(Sheet 2 of 2)

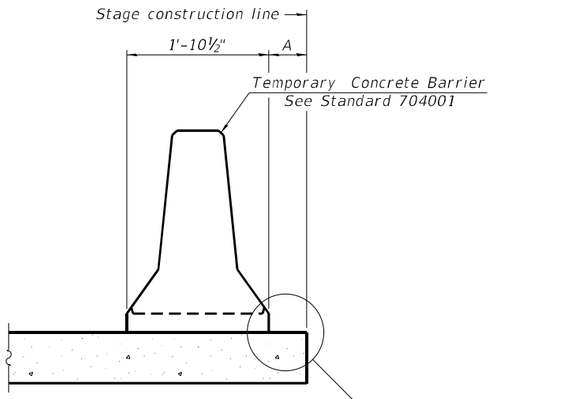

When "A" is 3'-1" or less, the temporary concrete barrier shall be restrained to the new slab according to Detail I, II or III. No restraint is required when "A" is greater than 3'-1".

NEW SLAB OR NEW DECK BEAM

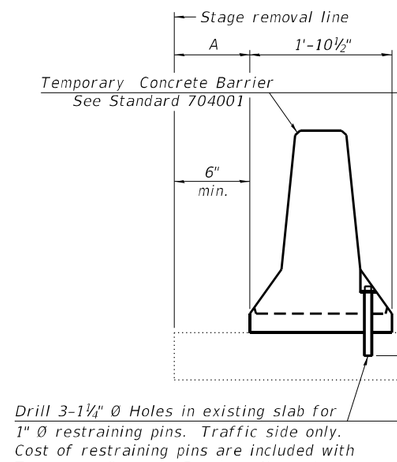

Drill 3-1¼" Ø Holes in existing slab for 1" Ø restraining pins. Traffic side only. Cost of restraining pins are included with Temporary Concrete Barrier. No restraint is required when "A" is greater than 3'-1".

EXISTING SLAB

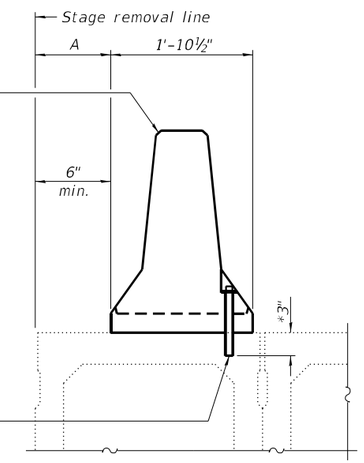

* When hot-mix asphalt wearing surface is present, embedment shall be 3" plus the wearing surface depth.

EXISTING DECK BEAM

SECTIONS THRU SLAB OR DECK BEAM

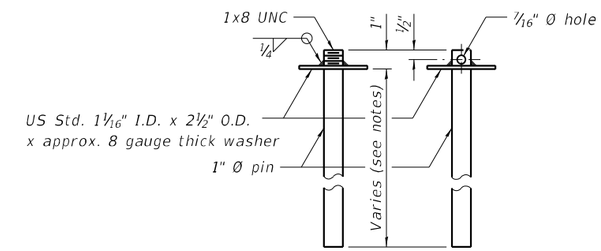

RESTRAINING PIN

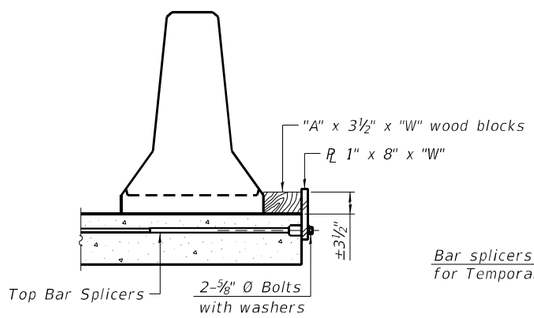

DETAIL I

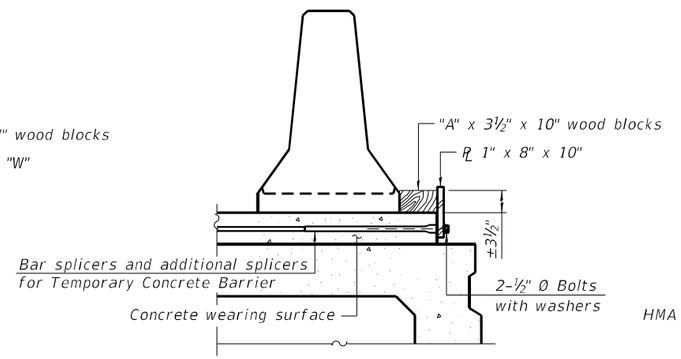

DETAIL II

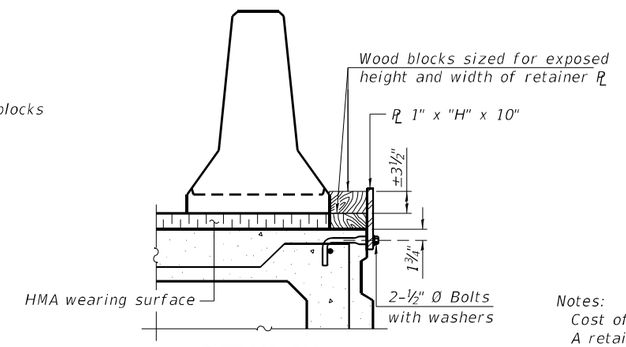

DETAIL III

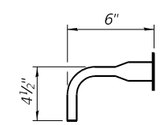

BAR SPLICER FOR #4 BAR - DETAIL III

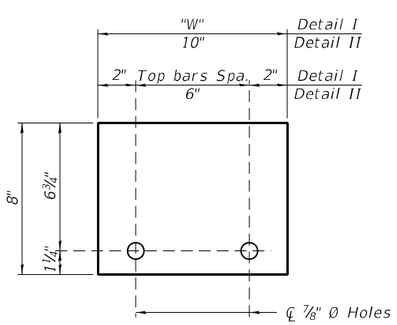

STEEL RETAINER PL 1" x 8" x "W"

(Detail I and II)

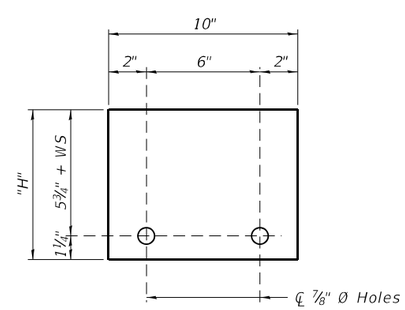

STEEL RETAINER PL 1" x "H" x 10"

(Detail III)

Notes:

Cost of retainer assembly is included with Temporary Concrete Barrier.

A retainer assembly shall be located at the approximate ℄ of each temporary concrete barrier.

The retainer plate shall not be removed until the concrete on the adjacent stage is ready to be poured. For Detail III applications the retainer plate shall not be removed until just prior to placing the adjacent beam.

When the 'A' dimension is less than 1½", the wood block shall be omitted and the barrier shall be placed in direct contact with the steel retainer plate. For deck beam applications the minimum required 'A' distance is 6" to accommodate the shear key clamping device.

Detail I - Installation for a new bridge deck or bridge slab.

Detail II - Installation for a new deck beam with an initial concrete wearing surface. Additional bar splicers shall be provided at 6'-0" centers and paired with the bar splicers of the concrete wearing surface reinforcement to accommodate the installation of the retainer assemblies. The cost of the additional bar splicers is included with the concrete wearing surface.

Detail III - Installation for a new deck beam with no initial wearing surface or with an initial hot-mix asphalt (HMA) wearing surface present. The deck beam directly beneath the temporary concrete barrier shall be fabricated with bar splicer inserts in the side of the beam, as detailed, to accommodate the installation of the retainer assemblies. A pair of bar splicers, 6" apart, shall be placed at 6'-0" centers along the length of the beam. The cost of the bar splicers is included with the deck beam.

RAILING CRITERIA

NCHRP 350 Test Level	3
Railing Weight (plf)	440

R-27

10-12-2021

MODEL: Default
FILE NAME: E:\2125-3\Final Design\Design Plans\CADD_Sheets\0720254-68886-005-TemporaryConcreteBarrier.dgn

6/21/2023 10:37:40 AM

LIN ENGINEERING, LTD.
Consulting Engineers
Springfield, Illinois

USER NAME =	DESIGNED - CZ	REVISED -	
	CHECKED - CL	REVISED -	
PLOT SCALE =	DRAWN - AJF	REVISED -	
PLOT DATE = 6/21/2023	CHECKED - MTH	REVISED -	

STATE OF ILLINOIS
DEPARTMENT OF TRANSPORTATION

TEMPORARY CONCRETE BARRIER
STRUCTURE NO. 072-0254

SHEET 5 OF 33 SHEETS

F.A.U. RTE.	SECTION	COUNTY	TOTAL SHEETS	SHEET NO.
6578	(72-3HB-4)BR	PEORIA	175	90
		CONTRACT NO. 68886		
	ILLINOIS	FED. AID PROJECT		

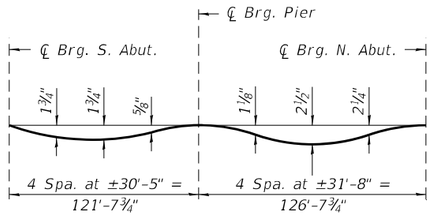

DEAD LOAD DEFLECTION DIAGRAM

(Includes weight of concrete only.)

Note:
The above deflections are not to be used in the field if the engineer is working from the grade elevations adjusted for dead load deflections and grinding as shown on Sheets 7 thru 9 of 33.

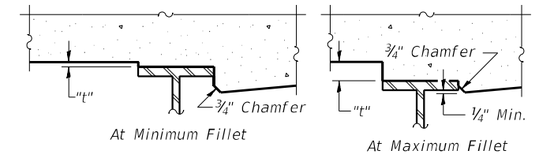

To determine "t": After all structural steel has been erected, elevations of the top flanges of the girders shall be taken at intervals shown below. These elevations subtracted from the "Theoretical Grade Elevations Adjusted for Dead Load Deflection and Grinding" shown on sheets 7 thru 9 of 33, minus the initial slab thickness prior to grinding, equals the fillet heights "t" above top flange of girders.

The slab is to be ground after curing to achieve smoothness, but the slab is not to be ground to elevations below the "Theoretical Grade Elevations" shown on sheets 7 thru 9 of 33. For grinding the deck, see Special Provisions.

FILLET HEIGHTS

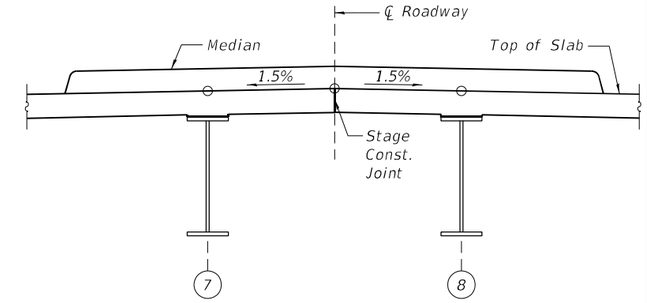

DETAIL AT MEDIAN

Elevations at ℄ Roadway, Girder 7 and Girder 8 are given at Theoretical Top of Slab below median.
(Looking North)

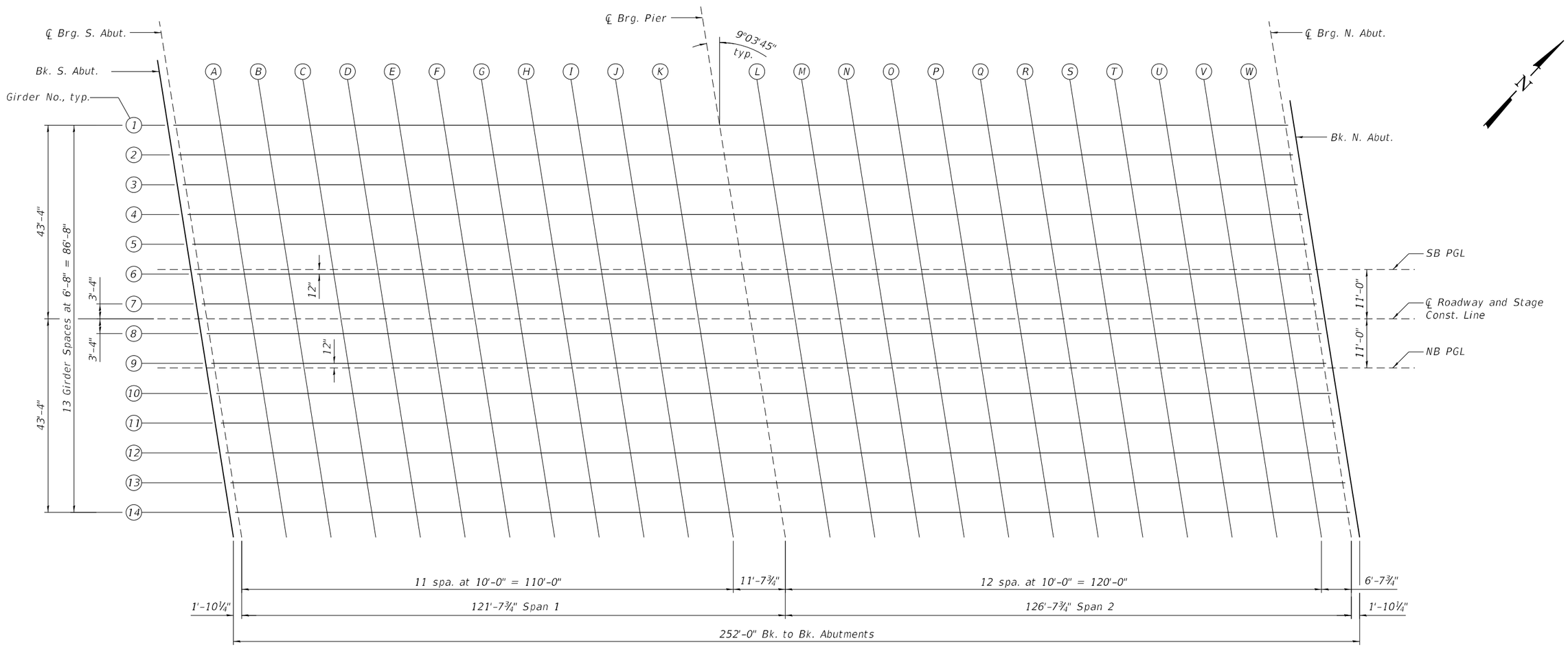

PLAN

(Sheet 1 of 4)

MODEL: Default
FILE NAME: E:\2125-3\Final Design\Design Plans\CADD_Sheets\0720254-68886-006-TopSlabElevations.dgn

6/21/2023 10:37:41 AM

LIN ENGINEERING, LTD. Consulting Engineers Springfield, Illinois	USER NAME =	DESIGNED - CZ	REVISED -	STATE OF ILLINOIS DEPARTMENT OF TRANSPORTATION	TOP OF SLAB ELEVATIONS STRUCTURE NO. 072-0254
		CHECKED - MSS	REVISED -		
	PLOT SCALE =	DRAWN - AGJ	REVISED -		
	PLOT DATE = 6/21/2023	CHECKED - MTH	REVISED -		SHEET 6 OF 33 SHEETS

F.A.U. RTE.	SECTION	COUNTY	TOTAL SHEETS	SHEET NO.
6578	(72-3HB-4)BR	PEORIA	175	91
		CONTRACT NO. 68886		
	ILLINOIS	FED. AID PROJECT		

GIRDER 1

Location	Station	Offset	Theoretical Grade Elevations	Theoretical Grade Elevations Adjusted For Dead Load Deflection and Grinding
Bk. S. Abut.	193+17.63	-43.33	640.54	640.56
℄ Brg. S. Abut.	193+19.49	-43.33	640.54	640.56
A	193+29.49	-43.33	640.49	640.57
B	193+39.49	-43.33	640.45	640.57
C	193+49.49	-43.33	640.40	640.56
D	193+59.49	-43.33	640.36	640.53
E	193+69.49	-43.33	640.31	640.49
F	193+79.49	-43.33	640.27	640.44
G	193+89.49	-43.33	640.22	640.37
H	193+99.49	-43.33	640.18	640.29
I	194+09.49	-43.33	640.13	640.21
J	194+19.49	-43.33	640.09	640.13
K	194+29.49	-43.33	640.04	640.07
℄ Brg. Pier	194+41.13	-43.33	639.99	640.01
L	194+51.13	-43.33	639.94	639.98
M	194+61.13	-43.33	639.90	639.96
N	194+71.13	-43.33	639.85	639.95
O	194+81.13	-43.33	639.81	639.95
P	194+91.13	-43.33	639.76	639.95
Q	195+01.13	-43.33	639.72	639.94
R	195+11.13	-43.33	639.67	639.91
S	195+21.13	-43.33	639.63	639.87
T	195+31.13	-43.33	639.58	639.80
U	195+41.13	-43.33	639.54	639.72
V	195+51.13	-43.33	639.49	639.62
W	195+61.13	-43.33	639.45	639.51
℄ Brg. N. Abut.	195+67.77	-43.33	639.42	639.44
Bk. N. Abut.	195+69.63	-43.33	639.41	639.43

GIRDER 2

Location	Station	Offset	Theoretical Grade Elevations	Theoretical Grade Elevations Adjusted For Dead Load Deflection and Grinding
Bk. S. Abut.	193+18.69	-36.67	640.67	640.69
℄ Brg. S. Abut.	193+20.55	-36.67	640.66	640.68
A	193+30.55	-36.67	640.62	640.70
B	193+40.55	-36.67	640.57	640.70
C	193+50.55	-36.67	640.53	640.69
D	193+60.55	-36.67	640.48	640.67
E	193+70.55	-36.67	640.44	640.63
F	193+80.55	-36.67	640.39	640.57
G	193+90.55	-36.67	640.35	640.50
H	194+00.55	-36.67	640.30	640.42
I	194+10.55	-36.67	640.26	640.34
J	194+20.55	-36.67	640.21	640.26
K	194+30.55	-36.67	640.17	640.20
℄ Brg. Pier	194+42.19	-36.67	640.12	640.14
L	194+52.19	-36.67	640.07	640.11
M	194+62.19	-36.67	640.03	640.09
N	194+72.19	-36.67	639.98	640.09
O	194+82.19	-36.67	639.94	640.09
P	194+92.19	-36.67	639.89	640.08
Q	195+02.19	-36.67	639.85	640.07
R	195+12.19	-36.67	639.80	640.05
S	195+22.19	-36.67	639.76	640.00
T	195+32.19	-36.67	639.71	639.94
U	195+42.19	-36.67	639.67	639.86
V	195+52.19	-36.67	639.62	639.76
W	195+62.19	-36.67	639.58	639.65
℄ Brg. N. Abut.	195+68.83	-36.67	639.55	639.57
Bk. N. Abut.	195+70.69	-36.67	639.54	639.56

GIRDER 3

Location	Station	Offset	Theoretical Grade Elevations	Theoretical Grade Elevations Adjusted For Dead Load Deflection and Grinding
Bk. S. Abut.	193+19.75	-30.00	640.80	640.82
℄ Brg. S. Abut.	193+21.61	-30.00	640.79	640.81
A	193+31.61	-30.00	640.75	640.82
B	193+41.61	-30.00	640.70	640.83
C	193+51.61	-30.00	640.66	640.82
D	193+61.61	-30.00	640.61	640.80
E	193+71.61	-30.00	640.57	640.75
F	193+81.61	-30.00	640.52	640.70
G	193+91.61	-30.00	640.48	640.63
H	194+01.61	-30.00	640.43	640.55
I	194+11.61	-30.00	640.39	640.47
J	194+21.61	-30.00	640.34	640.39
K	194+31.61	-30.00	640.30	640.32
℄ Brg. Pier	194+43.25	-30.00	640.25	640.27
L	194+53.25	-30.00	640.20	640.23
M	194+63.25	-30.00	640.16	640.22
N	194+73.25	-30.00	640.11	640.21
O	194+83.25	-30.00	640.07	640.21
P	194+93.25	-30.00	640.02	640.21
Q	195+03.25	-30.00	639.98	640.20
R	195+13.25	-30.00	639.93	640.17
S	195+23.25	-30.00	639.89	640.13
T	195+33.25	-30.00	639.84	640.07
U	195+43.25	-30.00	639.80	639.98
V	195+53.25	-30.00	639.75	639.88
W	195+63.25	-30.00	639.71	639.77
℄ Brg. N. Abut.	195+69.90	-30.00	639.68	639.70
Bk. N. Abut.	195+71.75	-30.00	639.67	639.69

GIRDER 4

Location	Station	Offset	Theoretical Grade Elevations	Theoretical Grade Elevations Adjusted For Dead Load Deflection and Grinding
Bk. S. Abut.	193+20.82	-23.33	640.93	640.95
℄ Brg. S. Abut.	193+22.68	-23.33	640.92	640.94
A	193+32.68	-23.33	640.88	640.95
B	193+42.68	-23.33	640.83	640.96
C	193+52.68	-23.33	640.79	640.95
D	193+62.68	-23.33	640.74	640.92
E	193+72.68	-23.33	640.70	640.88
F	193+82.68	-23.33	640.65	640.83
G	193+92.68	-23.33	640.61	640.76
H	194+02.68	-23.33	640.56	640.68
I	194+12.68	-23.33	640.52	640.60
J	194+22.68	-23.33	640.47	640.52
K	194+32.68	-23.33	640.43	640.45
℄ Brg. Pier	194+44.32	-23.33	640.37	640.39
L	194+54.32	-23.33	640.33	640.36
M	194+64.32	-23.33	640.28	640.35
N	194+74.32	-23.33	640.24	640.34
O	194+84.32	-23.33	640.19	640.34
P	194+94.32	-23.33	640.15	640.34
Q	195+04.32	-23.33	640.10	640.33
R	195+14.32	-23.33	640.06	640.30
S	195+24.32	-23.33	640.01	640.26
T	195+34.32	-23.33	639.97	640.19
U	195+44.32	-23.33	639.92	640.11
V	195+54.32	-23.33	639.88	640.01
W	195+64.32	-23.33	639.83	639.90
℄ Brg. N. Abut.	195+70.96	-23.33	639.80	639.82
Bk. N. Abut.	195+72.82	-23.33	639.80	639.82

GIRDER 5

Location	Station	Offset	Theoretical Grade Elevations	Theoretical Grade Elevations Adjusted For Dead Load Deflection and Grinding
Bk. S. Abut.	193+21.88	-16.67	641.03	641.05
℄ Brg. S. Abut.	193+23.74	-16.67	641.02	641.04
A	193+33.74	-16.67	640.97	641.05
B	193+43.74	-16.67	640.93	641.06
C	193+53.74	-16.67	640.88	641.05
D	193+63.74	-16.67	640.84	641.03
E	193+73.74	-16.67	640.79	640.99
F	193+83.74	-16.67	640.75	640.93
G	193+93.74	-16.67	640.70	640.86
H	194+03.74	-16.67	640.66	640.78
I	194+13.74	-16.67	640.61	640.69
J	194+23.74	-16.67	640.57	640.62
K	194+33.74	-16.67	640.52	640.55
℄ Brg. Pier	194+45.38	-16.67	640.47	640.49
L	194+55.38	-16.67	640.43	640.46
M	194+65.38	-16.67	640.38	640.45
N	194+75.38	-16.67	640.34	640.44
O	194+85.38	-16.67	640.29	640.44
P	194+95.38	-16.67	640.25	640.44
Q	195+05.38	-16.67	640.20	640.43
R	195+15.38	-16.67	640.16	640.41
S	195+25.38	-16.67	640.11	640.36
T	195+35.38	-16.67	640.07	640.30
U	195+45.38	-16.67	640.02	640.21
V	195+55.38	-16.67	639.98	640.11
W	195+65.38	-16.67	639.93	640.00
℄ Brg. N. Abut.	195+72.02	-16.67	639.90	639.92
Bk. N. Abut.	195+73.88	-16.67	639.89	639.91

SB PGL

Location	Station	Offset	Theoretical Grade Elevations	Theoretical Grade Elevations Adjusted For Dead Load Deflection and Grinding
Bk. S. Abut.	193+22.79	-11.00	641.11	641.13
℄ Brg. S. Abut.	193+24.64	-11.00	641.10	641.12
A	193+34.64	-11.00	641.05	641.13
B	193+44.64	-11.00	641.01	641.14
C	193+54.64	-11.00	640.96	641.13
D	193+64.64	-11.00	640.92	641.11
E	193+74.64	-11.00	640.87	641.07
F	193+84.64	-11.00	640.83	641.01
G	193+94.64	-11.00	640.78	640.94
H	194+04.64	-11.00	640.74	640.86
I	194+14.64	-11.00	640.69	640.78
J	194+24.64	-11.00	640.65	640.70
K	194+34.64	-11.00	640.60	640.63
℄ Brg. Pier	194+46.29	-11.00	640.55	640.57
L	194+56.29	-11.00	640.51	640.54
M	194+66.29	-11.00	640.46	640.53
N	194+76.29	-11.00	640.42	640.52
O	194+86.29	-11.00	640.37	640.52
P	194+96.29	-11.00	640.33	640.52
Q	195+06.29	-11.00	640.28	640.51
R	195+16.29	-11.00	640.24	640.49
S	195+26.29	-11.00	640.19	640.44
T	195+36.29	-11.00	640.15	640.38
U	195+46.29	-11.00	640.10	640.29
V	195+56.29	-11.00	640.06	640.19
W	195+66.29	-11.00	640.01	640.08
℄ Brg. N. Abut.	195+72.93	-11.00	639.98	640.00
Bk. N. Abut.	195+74.79	-11.00	639.97	639.99

Note:
Offsets measured from ℄ roadway.

(Sheet 2 of 4)

GIRDER 6

Location	Station	Offset	Theoretical Grade Elevations	Theoretical Grade Elevations Adjusted For Dead Load Deflection and Grinding
Bk. S. Abut.	193+22.94	-10.00	641.12	641.14
℄ Brg. S. Abut.	193+24.80	-10.00	641.11	641.13
A	193+34.80	-10.00	641.07	641.15
B	193+44.80	-10.00	641.02	641.15
C	193+54.80	-10.00	640.98	641.14
D	193+64.80	-10.00	640.93	641.12
E	193+74.80	-10.00	640.89	641.08
F	193+84.80	-10.00	640.84	641.02
G	193+94.80	-10.00	640.80	640.95
H	194+04.80	-10.00	640.75	640.87
I	194+14.80	-10.00	640.71	640.79
J	194+24.80	-10.00	640.66	640.71
K	194+34.80	-10.00	640.62	640.65
℄ Brg. Pier	194+46.44	-10.00	640.57	640.59
L	194+56.44	-10.00	640.52	640.56
M	194+66.44	-10.00	640.48	640.54
N	194+76.44	-10.00	640.43	640.54
O	194+86.44	-10.00	640.39	640.54
P	194+96.44	-10.00	640.34	640.54
Q	195+06.44	-10.00	640.30	640.53
R	195+16.44	-10.00	640.25	640.50
S	195+26.44	-10.00	640.21	640.46
T	195+36.44	-10.00	640.16	640.39
U	195+46.44	-10.00	640.12	640.31
V	195+56.44	-10.00	640.07	640.21
W	195+66.44	-10.00	640.03	640.10
℄ Brg. N. Abut.	195+73.09	-10.00	640.00	640.02
Bk. N. Abut.	195+74.94	-10.00	639.99	640.01

GIRDER 7

Location	Station	Offset	Theoretical Grade Elevations	Theoretical Grade Elevations Adjusted For Dead Load Deflection and Grinding
Bk. S. Abut.	193+24.01	-3.33	641.22	641.24
℄ Brg. S. Abut.	193+25.87	-3.33	641.21	641.23
A	193+35.87	-3.33	641.16	641.24
B	193+45.87	-3.33	641.12	641.25
C	193+55.87	-3.33	641.07	641.24
D	193+65.87	-3.33	641.03	641.22
E	193+75.87	-3.33	640.98	641.18
F	193+85.87	-3.33	640.94	641.12
G	193+95.87	-3.33	640.89	641.05
H	194+05.87	-3.33	640.85	640.97
I	194+15.87	-3.33	640.80	640.89
J	194+25.87	-3.33	640.76	640.81
K	194+35.87	-3.33	640.71	640.74
℄ Brg. Pier	194+47.51	-3.33	640.66	640.68
L	194+57.51	-3.33	640.62	640.65
M	194+67.51	-3.33	640.57	640.64
N	194+77.51	-3.33	640.53	640.63
O	194+87.51	-3.33	640.48	640.63
P	194+97.51	-3.33	640.44	640.63
Q	195+07.51	-3.33	640.39	640.62
R	195+17.51	-3.33	640.35	640.60
S	195+27.51	-3.33	640.30	640.55
T	195+37.51	-3.33	640.26	640.49
U	195+47.51	-3.33	640.21	640.40
V	195+57.51	-3.33	640.17	640.30
W	195+67.51	-3.33	640.12	640.19
℄ Brg. N. Abut.	195+74.15	-3.33	640.09	640.11
Bk. N. Abut.	195+76.01	-3.33	640.08	640.10

℄ ROADWAY AND STAGE CONST. LINE

Location	Station	Offset	Theoretical Grade Elevations	Theoretical Grade Elevations Adjusted For Dead Load Deflection and Grinding
Bk. S. Abut.	193+24.54	0.00	641.27	641.29
℄ Brg. S. Abut.	193+26.40	0.00	641.26	641.28
A	193+36.40	0.00	641.21	641.29
B	193+46.40	0.00	641.17	641.29
C	193+56.40	0.00	641.12	641.29
D	193+66.40	0.00	641.08	641.26
E	193+76.40	0.00	641.03	641.22
F	193+86.40	0.00	640.99	641.17
G	193+96.40	0.00	640.94	641.10
H	194+06.40	0.00	640.90	641.02
I	194+16.40	0.00	640.85	640.93
J	194+26.40	0.00	640.81	640.85
K	194+36.40	0.00	640.76	640.79
℄ Brg. Pier	194+48.04	0.00	640.71	640.73
L	194+58.04	0.00	640.66	640.70
M	194+68.04	0.00	640.62	640.68
N	194+78.04	0.00	640.57	640.68
O	194+88.04	0.00	640.53	640.68
P	194+98.04	0.00	640.48	640.68
Q	195+08.04	0.00	640.44	640.67
R	195+18.04	0.00	640.39	640.64
S	195+28.04	0.00	640.35	640.60
T	195+38.04	0.00	640.30	640.54
U	195+48.04	0.00	640.26	640.45
V	195+58.04	0.00	640.21	640.35
W	195+68.04	0.00	640.17	640.24
℄ Brg. N. Abut.	195+74.68	0.00	640.14	640.16
Bk. N. Abut.	195+76.54	0.00	640.13	640.15

GIRDER 8

Location	Station	Offset	Theoretical Grade Elevations	Theoretical Grade Elevations Adjusted For Dead Load Deflection and Grinding
Bk. S. Abut.	193+25.07	3.33	641.21	641.23
℄ Brg. S. Abut.	193+26.93	3.33	641.20	641.22
A	193+36.93	3.33	641.16	641.24
B	193+46.93	3.33	641.11	641.24
C	193+56.93	3.33	641.07	641.23
D	193+66.93	3.33	641.02	641.21
E	193+76.93	3.33	640.98	641.17
F	193+86.93	3.33	640.93	641.11
G	193+96.93	3.33	640.89	641.04
H	194+06.93	3.33	640.84	640.96
I	194+16.93	3.33	640.80	640.88
J	194+26.93	3.33	640.75	640.80
K	194+36.93	3.33	640.71	640.74
℄ Brg. Pier	194+48.57	3.33	640.66	640.68
L	194+58.57	3.33	640.61	640.65
M	194+68.57	3.33	640.57	640.63
N	194+78.57	3.33	640.52	640.63
O	194+88.57	3.33	640.48	640.63
P	194+98.57	3.33	640.43	640.63
Q	195+08.57	3.33	640.39	640.62
R	195+18.57	3.33	640.34	640.59
S	195+28.57	3.33	640.30	640.55
T	195+38.57	3.33	640.25	640.48
U	195+48.57	3.33	640.21	640.40
V	195+58.57	3.33	640.16	640.30
W	195+68.57	3.33	640.12	640.19
℄ Brg. N. Abut.	195+75.21	3.33	640.09	640.11
Bk. N. Abut.	195+77.07	3.33	640.08	640.10

GIRDER 9

Location	Station	Offset	Theoretical Grade Elevations	Theoretical Grade Elevations Adjusted For Dead Load Deflection and Grinding
Bk. S. Abut.	193+26.14	10.00	641.11	641.13
℄ Brg. S. Abut.	193+27.99	10.00	641.10	641.12
A	193+37.99	10.00	641.05	641.13
B	193+47.99	10.00	641.01	641.14
C	193+57.99	10.00	640.96	641.13
D	193+67.99	10.00	640.92	641.11
E	193+77.99	10.00	640.87	641.07
F	193+87.99	10.00	640.83	641.01
G	193+97.99	10.00	640.78	640.94
H	194+07.99	10.00	640.74	640.86
I	194+17.99	10.00	640.69	640.78
J	194+27.99	10.00	640.65	640.70
K	194+37.99	10.00	640.60	640.63
℄ Brg. Pier	194+49.64	10.00	640.55	640.57
L	194+59.64	10.00	640.51	640.54
M	194+69.64	10.00	640.46	640.53
N	194+79.64	10.00	640.42	640.52
O	194+89.64	10.00	640.37	640.52
P	194+99.64	10.00	640.33	640.52
Q	195+09.64	10.00	640.28	640.51
R	195+19.64	10.00	640.24	640.49
S	195+29.64	10.00	640.19	640.44
T	195+39.64	10.00	640.15	640.38
U	195+49.64	10.00	640.10	640.29
V	195+59.64	10.00	640.06	640.19
W	195+69.64	10.00	640.01	640.08
℄ Brg. N. Abut.	195+76.28	10.00	639.98	640.00
Bk. N. Abut.	195+78.14	10.00	639.97	639.99

NB PGL

Location	Station	Offset	Theoretical Grade Elevations	Theoretical Grade Elevations Adjusted For Dead Load Deflection and Grinding
Bk. S. Abut.	193+26.29	11.00	641.09	641.11
℄ Brg. S. Abut.	193+28.15	11.00	641.08	641.10
A	193+38.15	11.00	641.04	641.12
B	193+48.15	11.00	640.99	641.12
C	193+58.15	11.00	640.95	641.11
D	193+68.15	11.00	640.90	641.09
E	193+78.15	11.00	640.86	641.05
F	193+88.15	11.00	640.81	640.99
G	193+98.15	11.00	640.77	640.92
H	194+08.15	11.00	640.72	640.84
I	194+18.15	11.00	640.68	640.76
J	194+28.15	11.00	640.63	640.68
K	194+38.15	11.00	640.59	640.62
℄ Brg. Pier	194+49.79	11.00	640.54	640.56
L	194+59.79	11.00	640.49	640.53
M	194+69.79	11.00	640.45	640.51
N	194+79.79	11.00	640.40	640.51
O	194+89.79	11.00	640.36	640.51
P	194+99.79	11.00	640.31	640.51
Q	195+09.79	11.00	640.27	640.50
R	195+19.79	11.00	640.22	640.47
S	195+29.79	11.00	640.18	640.43
T	195+39.79	11.00	640.13	640.36
U	195+49.79	11.00	640.09	640.28
V	195+59.79	11.00	640.04	640.18
W	195+69.79	11.00	640.00	640.07
℄ Brg. N. Abut.	195+76.44	11.00	639.97	639.99
Bk. N. Abut.	195+78.29	11.00	639.96	639.98

Note:
Offsets measured from ℄ roadway.

(Sheet 3 of 4)

GIRDER 10

Location	Station	Offset	Theoretical Grade Elevations	Theoretical Grade Elevations Adjusted For Dead Load Deflection and Grinding
Bk. S. Abut.	193+27.20	16.67	641.00	641.02
℄ Brg. S. Abut.	193+29.06	16.67	640.99	641.01
A	193+39.06	16.67	640.95	641.03
B	193+49.06	16.67	640.90	641.03
C	193+59.06	16.67	640.86	641.03
D	193+69.06	16.67	640.81	641.00
E	193+79.06	16.67	640.77	640.96
F	193+89.06	16.67	640.72	640.90
G	193+99.06	16.67	640.68	640.83
H	194+09.06	16.67	640.63	640.75
I	194+19.06	16.67	640.59	640.67
J	194+29.06	16.67	640.54	640.59
K	194+39.06	16.67	640.50	640.53
℄ Brg. Pier	194+50.70	16.67	640.45	640.47
L	194+60.70	16.67	640.40	640.44
M	194+70.70	16.67	640.36	640.42
N	194+80.70	16.67	640.31	640.42
O	194+90.70	16.67	640.27	640.42
P	195+00.70	16.67	640.22	640.42
Q	195+10.70	16.67	640.18	640.41
R	195+20.70	16.67	640.13	640.38
S	195+30.70	16.67	640.09	640.34
T	195+40.70	16.67	640.04	640.27
U	195+50.70	16.67	640.00	640.19
V	195+60.70	16.67	639.95	640.09
W	195+70.70	16.67	639.91	639.98
℄ Brg. N. Abut.	195+77.34	16.67	639.88	639.90
Bk. N. Abut.	195+79.20	16.67	639.87	639.89

GIRDER 11

Location	Station	Offset	Theoretical Grade Elevations	Theoretical Grade Elevations Adjusted For Dead Load Deflection and Grinding
Bk. S. Abut.	193+28.26	23.33	640.90	640.92
℄ Brg. S. Abut.	193+30.12	23.33	640.89	640.91
A	193+40.12	23.33	640.84	640.92
B	193+50.12	23.33	640.80	640.92
C	193+60.12	23.33	640.75	640.91
D	193+70.12	23.33	640.71	640.89
E	193+80.12	23.33	640.66	640.85
F	193+90.12	23.33	640.62	640.79
G	194+00.12	23.33	640.57	640.72
H	194+10.12	23.33	640.53	640.64
I	194+20.12	23.33	640.48	640.56
J	194+30.12	23.33	640.44	640.49
K	194+40.12	23.33	640.39	640.42
℄ Brg. Pier	194+51.76	23.33	640.34	640.36
L	194+61.76	23.33	640.30	640.33
M	194+71.76	23.33	640.25	640.31
N	194+81.76	23.33	640.21	640.31
O	194+91.76	23.33	640.16	640.31
P	195+01.76	23.33	640.12	640.31
Q	195+11.76	23.33	640.07	640.29
R	195+21.76	23.33	640.03	640.27
S	195+31.76	23.33	639.98	640.22
T	195+41.76	23.33	639.94	640.16
U	195+51.76	23.33	639.89	640.08
V	195+61.76	23.33	639.85	639.98
W	195+71.76	23.33	639.80	639.87
℄ Brg. N. Abut.	195+78.40	23.33	639.77	639.79
Bk. N. Abut.	195+80.26	23.33	639.76	639.78

GIRDER 12

Location	Station	Offset	Theoretical Grade Elevations	Theoretical Grade Elevations Adjusted For Dead Load Deflection and Grinding
Bk. S. Abut.	193+29.33	30.00	640.76	640.78
℄ Brg. S. Abut.	193+31.18	30.00	640.75	640.77
A	193+41.18	30.00	640.71	640.78
B	193+51.18	30.00	640.66	640.79
C	193+61.18	30.00	640.62	640.78
D	193+71.18	30.00	640.57	640.75
E	193+81.18	30.00	640.53	640.71
F	193+91.18	30.00	640.48	640.65
G	194+01.18	30.00	640.44	640.58
H	194+11.18	30.00	640.39	640.51
I	194+21.18	30.00	640.35	640.42
J	194+31.18	30.00	640.30	640.35
K	194+41.18	30.00	640.26	640.28
℄ Brg. Pier	194+52.83	30.00	640.20	640.22
L	194+62.83	30.00	640.16	640.19
M	194+72.83	30.00	640.11	640.18
N	194+82.83	30.00	640.07	640.17
O	194+92.83	30.00	640.02	640.17
P	195+02.83	30.00	639.98	640.17
Q	195+12.83	30.00	639.93	640.16
R	195+22.83	30.00	639.89	640.13
S	195+32.83	30.00	639.84	640.09
T	195+42.83	30.00	639.80	640.02
U	195+52.83	30.00	639.75	639.94
V	195+62.83	30.00	639.71	639.84
W	195+72.83	30.00	639.66	639.73
℄ Brg. N. Abut.	195+79.47	30.00	639.63	639.65
Bk. N. Abut.	195+81.33	30.00	639.62	639.64

GIRDER 13

Location	Station	Offset	Theoretical Grade Elevations	Theoretical Grade Elevations Adjusted For Dead Load Deflection and Grinding
Bk. S. Abut.	193+30.39	36.67	640.62	640.64
℄ Brg. S. Abut.	193+32.25	36.67	640.61	640.63
A	193+42.25	36.67	640.57	640.64
B	193+52.25	36.67	640.52	640.65
C	193+62.25	36.67	640.48	640.64
D	193+72.25	36.67	640.43	640.61
E	193+82.25	36.67	640.39	640.57
F	193+92.25	36.67	640.34	640.52
G	194+02.25	36.67	640.30	640.45
H	194+12.25	36.67	640.25	640.37
I	194+22.25	36.67	640.21	640.29
J	194+32.25	36.67	640.16	640.21
K	194+42.25	36.67	640.12	640.14
℄ Brg. Pier	194+53.89	36.67	640.06	640.08
L	194+63.89	36.67	640.02	640.05
M	194+73.89	36.67	639.97	640.04
N	194+83.89	36.67	639.93	640.03
O	194+93.89	36.67	639.88	640.03
P	195+03.89	36.67	639.84	640.03
Q	195+13.89	36.67	639.79	640.02
R	195+23.89	36.67	639.75	639.99
S	195+33.89	36.67	639.70	639.95
T	195+43.89	36.67	639.66	639.89
U	195+53.89	36.67	639.61	639.80
V	195+63.89	36.67	639.57	639.70
W	195+73.89	36.67	639.52	639.59
℄ Brg. N. Abut.	195+80.53	36.67	639.49	639.51
Bk. N. Abut.	195+82.39	36.67	639.49	639.51

GIRDER 14

Location	Station	Offset	Theoretical Grade Elevations	Theoretical Grade Elevations Adjusted For Dead Load Deflection and Grinding
Bk. S. Abut.	193+31.45	43.33	640.48	640.50
℄ Brg. S. Abut.	193+33.31	43.33	640.47	640.49
A	193+43.31	43.33	640.43	640.50
B	193+53.31	43.33	640.38	640.51
C	193+63.31	43.33	640.34	640.50
D	193+73.31	43.33	640.29	640.47
E	193+83.31	43.33	640.25	640.43
F	193+93.31	43.33	640.20	640.37
G	194+03.31	43.33	640.16	640.30
H	194+13.31	43.33	640.11	640.23
I	194+23.31	43.33	640.07	640.15
J	194+33.31	43.33	640.02	640.07
K	194+43.31	43.33	639.98	640.00
℄ Brg. Pier	194+54.95	43.33	639.93	639.95
L	194+64.95	43.33	639.88	639.91
M	194+74.95	43.33	639.84	639.90
N	194+84.95	43.33	639.79	639.89
O	194+94.95	43.33	639.75	639.89
P	195+04.95	43.33	639.70	639.89
Q	195+14.95	43.33	639.66	639.88
R	195+24.95	43.33	639.61	639.85
S	195+34.95	43.33	639.57	639.80
T	195+44.95	43.33	639.52	639.74
U	195+54.95	43.33	639.48	639.66
V	195+64.95	43.33	639.43	639.56
W	195+74.95	43.33	639.39	639.45
℄ Brg. N. Abut.	195+81.59	43.33	639.36	639.38
Bk. N. Abut.	195+83.45	43.33	639.35	639.37

Note:
Offsets measured from ℄ roadway.

(Sheet 4 of 4)

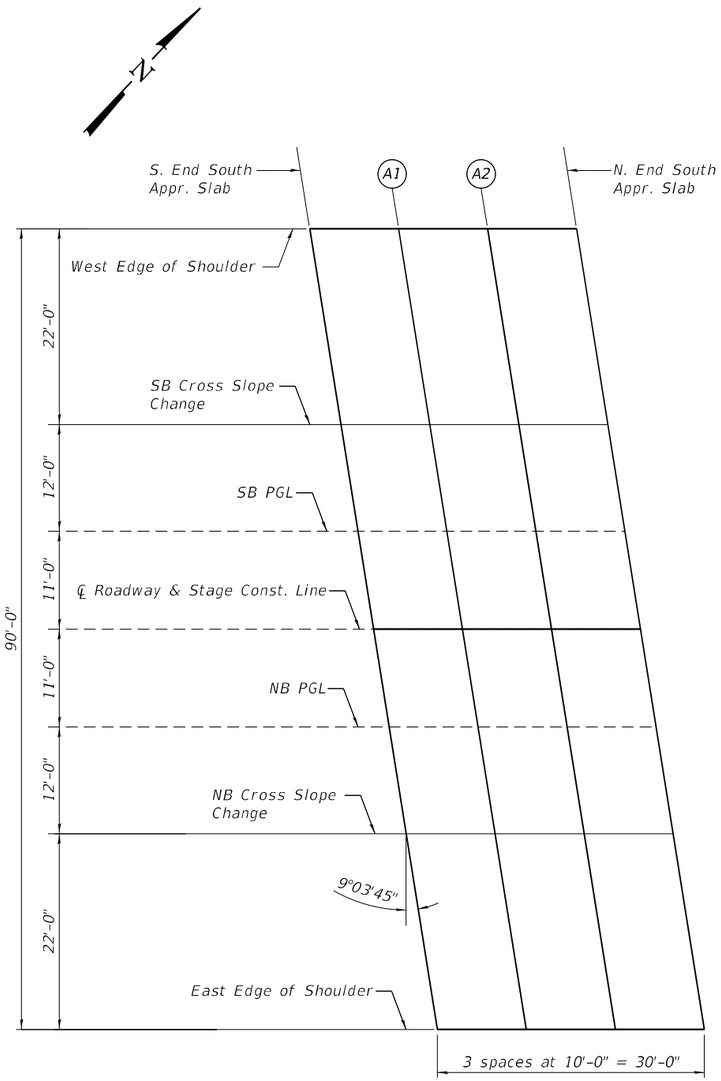

SOUTH APPROACH PLAN

WEST EDGE OF SHOULDER

Location	Station	Offset	Theoretical Grade Elevations	Theoretical Grade Elevations Adjusted For Grinding
S. End S. Approach Slab	192+88.37	-45.00	640.64	640.66
A1	192+98.37	-45.00	640.60	640.62
A2	193+08.37	-45.00	640.55	640.57
N. End S. Approach Slab	193+18.37	-45.00	640.51	640.53

SB PGL

Location	Station	Offset	Theoretical Grade Elevations	Theoretical Grade Elevations Adjusted For Grinding
S. End S. Approach Slab	192+93.80	-11.00	641.24	641.26
A1	193+03.80	-11.00	641.19	641.21
A2	193+13.80	-11.00	641.15	641.17
N. End S. Approach Slab	193+23.80	-11.00	641.10	641.12

NB PGL

Location	Station	Offset	Theoretical Grade Elevations	Theoretical Grade Elevations Adjusted For Grinding
S. End S. Approach Slab	192+97.30	11.00	641.22	641.24
A1	193+07.30	11.00	641.18	641.20
A2	193+17.30	11.00	641.13	641.15
N. End S. Approach Slab	193+27.30	11.00	641.09	641.11

SB CROSS SLOPE CHANGE

Location	Station	Offset	Theoretical Grade Elevations	Theoretical Grade Elevations Adjusted For Grinding
S. End S. Approach Slab	192+91.88	-23.00	641.07	641.09
A1	193+01.88	-23.00	641.02	641.04
A2	193+11.88	-23.00	640.98	641.00
N. End S. Approach Slab	193+21.88	-23.00	640.93	640.95

℄ ROADWAY & STAGE CONST. LINE

Location	Station	Offset	Theoretical Grade Elevations	Theoretical Grade Elevations Adjusted For Grinding
S. End S. Approach Slab	192+95.55	0.00	641.39	641.41
A1	193+05.55	0.00	641.35	641.37
A2	193+15.55	0.00	641.30	641.32
N. End S. Approach Slab	193+25.55	0.00	641.26	641.28

NB CROSS SLOPE CHANGE

Location	Station	Offset	Theoretical Grade Elevations	Theoretical Grade Elevations Adjusted For Grinding
S. End S. Approach Slab	192+99.22	23.00	641.03	641.05
A1	193+09.22	23.00	640.99	641.01
A2	193+19.22	23.00	640.94	640.96
N. End S. Approach Slab	193+29.22	23.00	640.90	640.92

EAST EDGE OF SHOULDER

Location	Station	Offset	Theoretical Grade Elevations	Theoretical Grade Elevations Adjusted For Grinding
S. End S. Approach Slab	193+02.73	45.00	640.58	640.60
A1	193+12.73	45.00	640.53	640.55
A2	193+22.73	45.00	640.49	640.51
N. End S. Approach Slab	193+32.73	45.00	640.44	640.46

Note:
Offsets measured from ℄ roadway.

(Sheet 1 of 2)

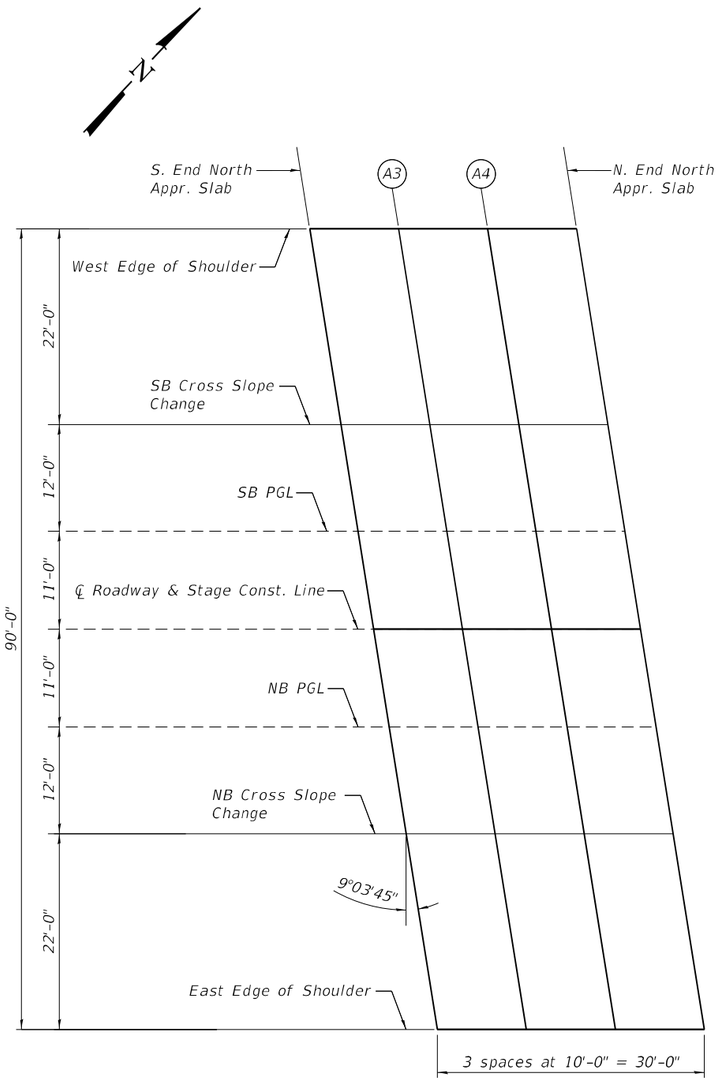

NORTH APPROACH PLAN

WEST EDGE OF SHOULDER

Location	Station	Offset	Theoretical Grade Elevations	Theoretical Grade Elevations Adjusted For Grinding
S. End N. Approach Slab	195+68.35	-45.00	639.38	639.40
A3	195+78.35	-45.00	639.34	639.36
A4	195+88.35	-45.00	639.29	639.31
N. End N. Approach Slab	195+98.55	-45.00	639.25	639.27

SB CROSS SLOPE CHANGE

Location	Station	Offset	Theoretical Grade Elevations	Theoretical Grade Elevations Adjusted For Grinding
S. End N. Approach Slab	195+71.86	-23.00	639.81	639.83
A3	195+81.86	-23.00	639.76	639.78
A4	195+91.86	-23.00	639.72	639.74
N. End N. Approach Slab	196+01.86	-23.00	639.67	639.69

SB PGL

Location	Station	Offset	Theoretical Grade Elevations	Theoretical Grade Elevations Adjusted For Grinding
S. End N. Approach Slab	195+73.78	-11.00	639.98	640.00
A3	195+83.78	-11.00	639.93	639.95
A4	195+93.78	-11.00	639.89	639.91
N. End N. Approach Slab	196+03.78	-11.00	639.84	639.86

℄ ROADWAY & STAGE CONST. LINE

Location	Station	Offset	Theoretical Grade Elevations	Theoretical Grade Elevations Adjusted For Grinding
S. End N. Approach Slab	195+75.53	0.00	640.14	640.16
A3	195+85.53	0.00	640.09	640.11
A4	195+95.33	0.00	640.05	640.07
N. End N. Approach Slab	196+05.53	0.00	640.00	640.02

NB PGL

Location	Station	Offset	Theoretical Grade Elevations	Theoretical Grade Elevations Adjusted For Grinding
S. End N. Approach Slab	195+77.28	11.00	639.96	639.98
A3	195+87.28	11.00	639.92	639.94
A4	195+97.28	11.00	639.87	639.89
N. End N. Approach Slab	196+07.28	11.00	639.83	639.85

NB CROSS SLOPE CHANGE

Location	Station	Offset	Theoretical Grade Elevations	Theoretical Grade Elevations Adjusted For Grinding
S. End N. Approach Slab	195+79.20	23.00	639.77	639.79
A3	195+89.20	23.00	639.73	639.75
A4	195+99.20	23.00	639.68	639.70
N. End N. Approach Slab	196+09.20	23.00	639.64	639.66

EAST EDGE OF SHOULDER

Location	Station	Offset	Theoretical Grade Elevations	Theoretical Grade Elevations Adjusted For Grinding
S. End N. Approach Slab	195+82.71	45.00	639.32	639.34
A3	195+92.71	45.00	639.27	639.29
A4	196+02.71	45.00	639.23	639.25
N. End N. Approach Slab	196+12.71	45.00	639.18	639.20

Note:
Offsets measured from ℄ roadway.

(Sheet 2 of 2)

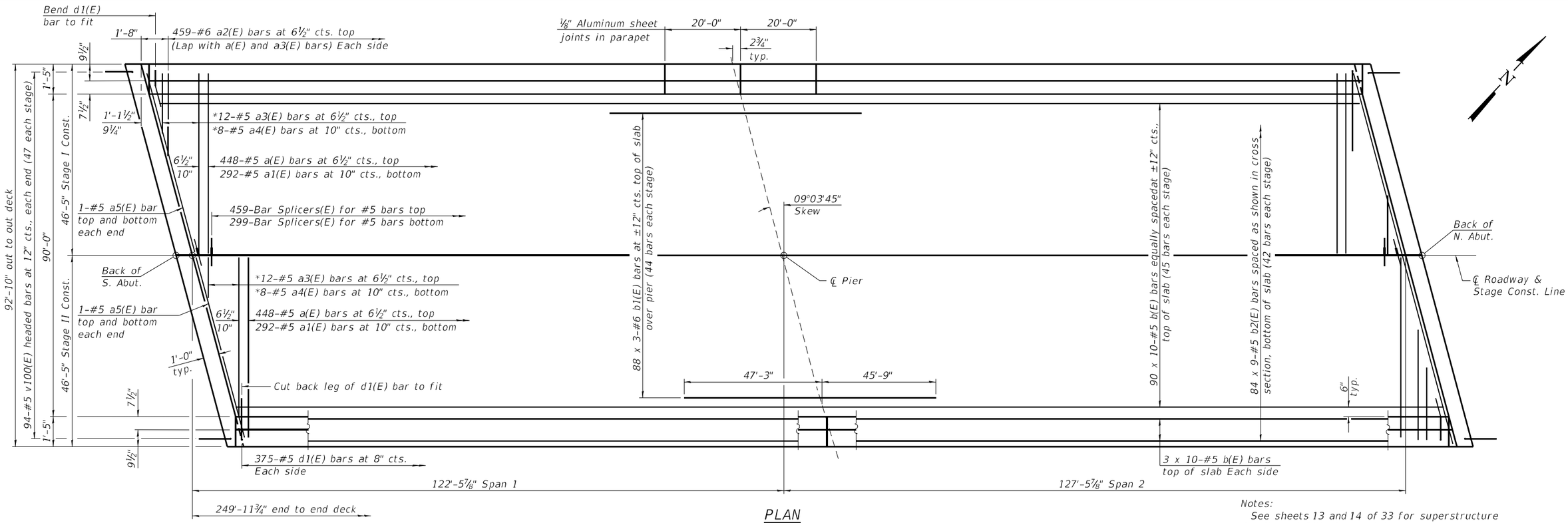

PLAN

(Median not shown for clarity)

MINIMUM BAR LAP

#5 bar = 3'-6"
#6 bar = 3'-7"

* See Field Cutting Diagram on sheet 14 of 33.

** Prior to grinding
*** After grinding

Notes:
See sheets 13 and 14 of 33 for superstructure details and Bill of Material.
Bars indicated thus 20 x 3-#5 etc. indicates 20 lines of bars with 3 lengths per line.
See sheet 1 of 33 for location of drainage scuppers.

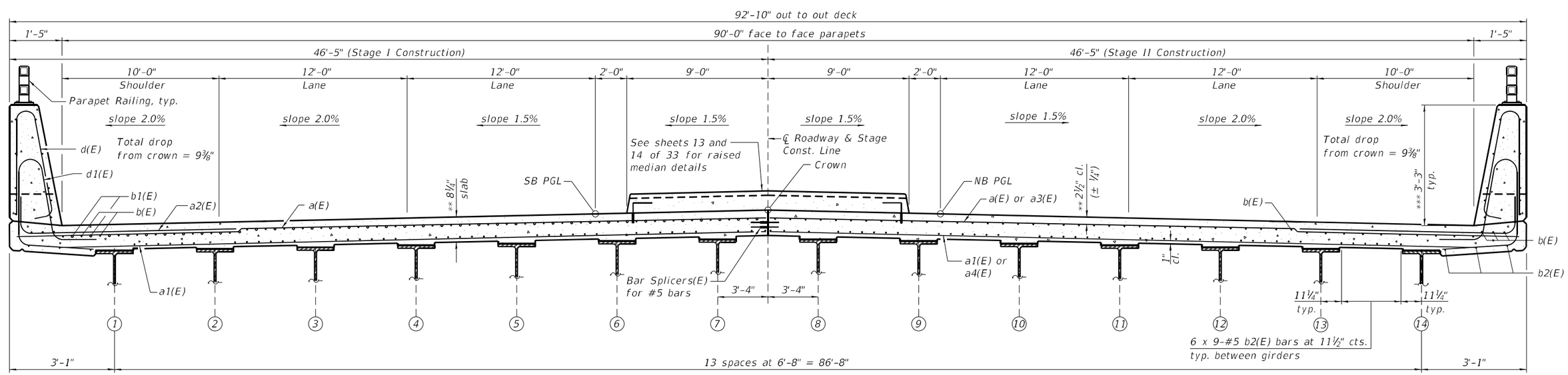

NEAR PIER

CROSS SECTION

(Looking North)
(Shear studs not shown for clarity)

NEAR MIDSPAN

LIN ENGINEERING, LTD. Consulting Engineers Springfield, Illinois	USER NAME =	DESIGNED - CZ	REVISED -	STATE OF ILLINOIS DEPARTMENT OF TRANSPORTATION	SUPERSTRUCTURE STRUCTURE NO. 072-0254	F.A.U. RTE.	SECTION	COUNTY	TOTAL SHEETS / SHEET NO.
		CHECKED - MSS	REVISED -			6578	(72-3HB-4)BR	PEORIA	175 / 97
	PLOT SCALE =	DRAWN - AGJ	REVISED -					CONTRACT NO. 68886	
	PLOT DATE = 6/21/2023	CHECKED - MTH	REVISED -		SHEET 12 OF 33 SHEETS		ILLINOIS	FED. AID PROJECT	

MODEL: Default
FILE NAME: E:\2125-3\Final Design\Design Plans\CADD_Sheets\0720254-68886-012-Superstructure.dgn
6/21/2023 10:37:45 AM

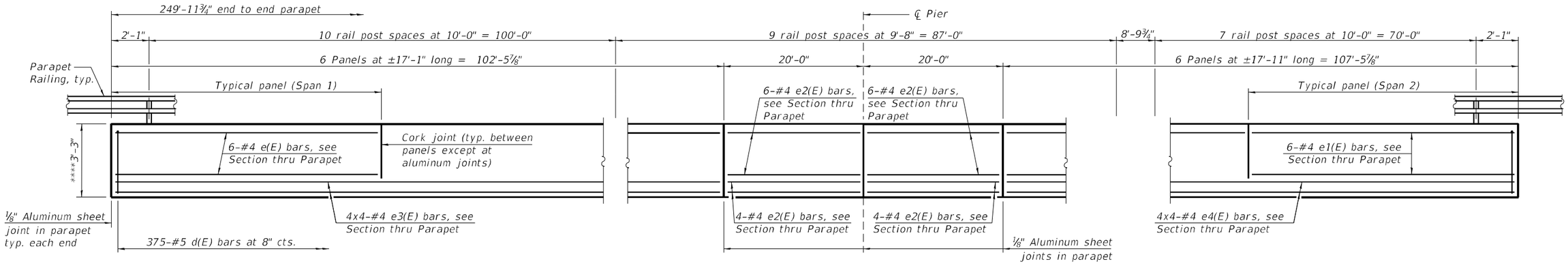

INSIDE ELEVATION OF PARAPET

(West parapet shown; East parapet mirror image)

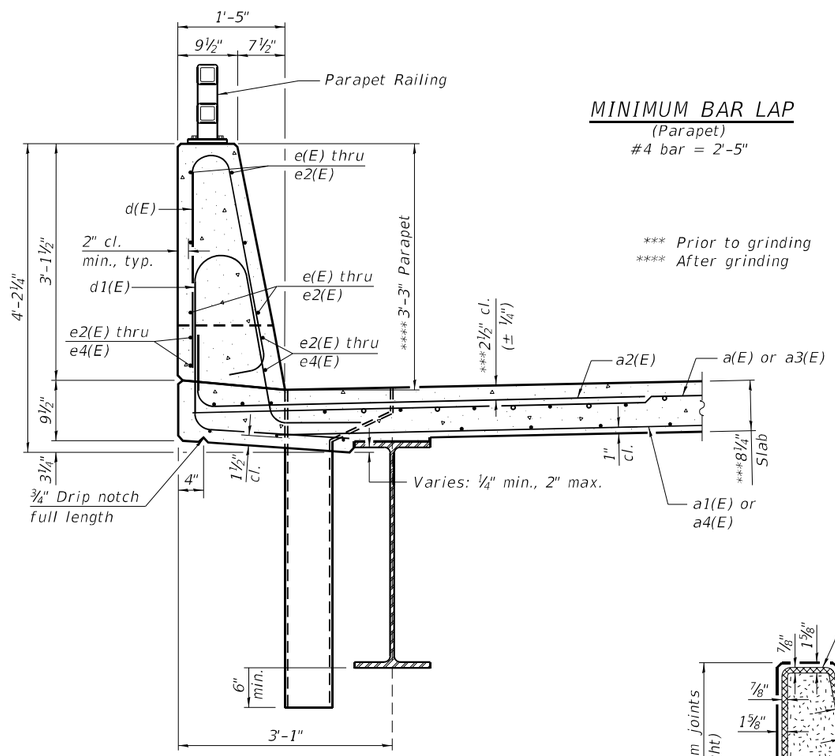

MINIMUM BAR LAP

(Parapet)
#4 bar = 2'-5"

*** Prior to grinding
**** After grinding

SECTION THRU PARAPET

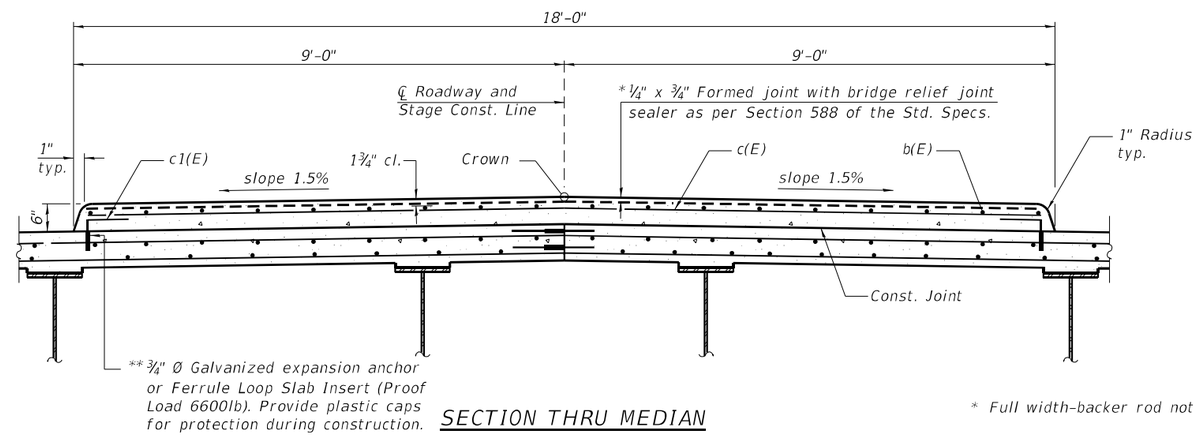

SECTION THRU MEDIAN

* Full width-backer rod not required.

** The cost of expansion anchors/inserts is included in the cost of Reinforcement Bars, Epoxy Coated.

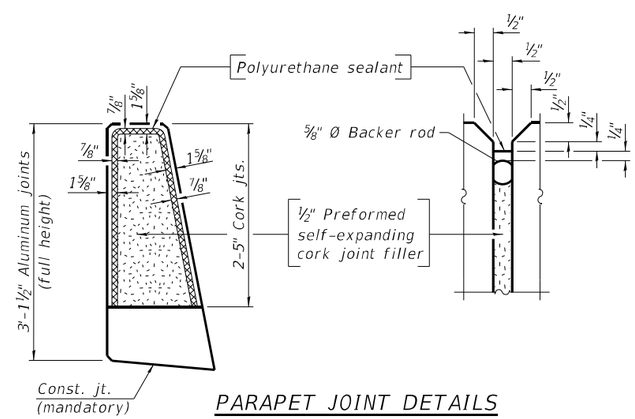

PARAPET JOINT DETAILS

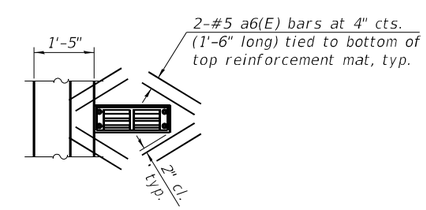

PLAN AT SCUPPERS

Cut longitudinal reinforcement to clear drainage scuppers.

Notes:

The ⅛" aluminum sheet shall be ASTM B 209 alloy 3003-H14 and coated to minimize reaction with wet concrete. Cost included with Concrete Superstructure.

The polyurethane sealant shall be according to Article 1050.04 of the Std. Spec. and the color shall be gray.

Bars indicated thus 20 x 3-#5 etc. indicates 20 lines of bars with 3 lengths per line.

(Sheet 1 of 2)

MODEL: Default
FILE NAME: E:\2125-3\Final Design\Design Plans\CADD_Sheets\0720254-68886-013-SuperstructureDetails.dgn

LIN ENGINEERING, LTD. Consulting Engineers Springfield, Illinois	USER NAME =	DESIGNED - CZ	REVISED -	STATE OF ILLINOIS DEPARTMENT OF TRANSPORTATION	SUPERSTRUCTURE DETAILS STRUCTURE NO. 072-0254	F.A.U. RTE.	SECTION	COUNTY	TOTAL SHEETS	SHEET NO.
		CHECKED - MSS	REVISED -			6578	(72-3HB-4)BR	PEORIA	175	98
	PLOT SCALE =	DRAWN - AGJ	REVISED -					CONTRACT NO. 68886		
	PLOT DATE = 6/21/2023	CHECKED - MTH	REVISED -		SHEET 13 OF 33 SHEETS		ILLINOIS	FED. AID PROJECT		

6/21/2023 10:37:45 AM

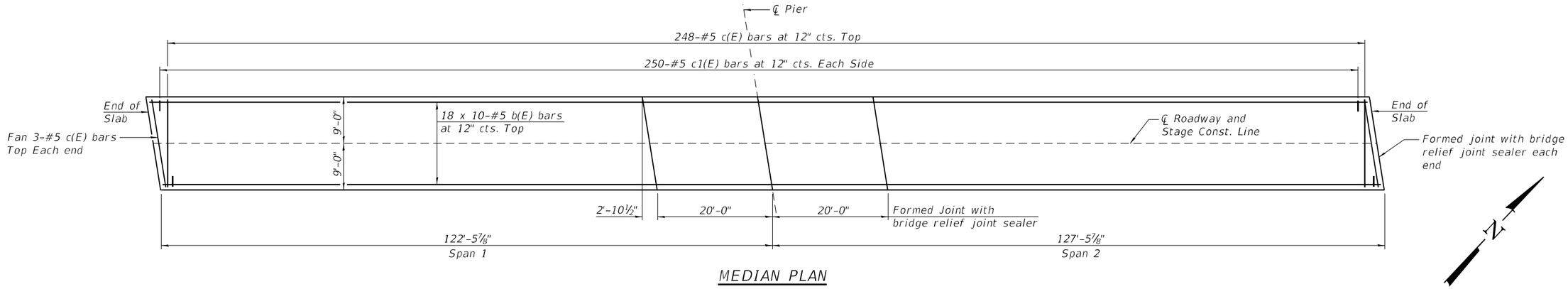

MEDIAN PLAN

MINIMUM BAR LAP
(Median)
#5 bar = 3'-6"

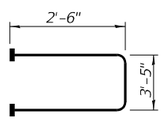

BAR s21(E)
(Headed)

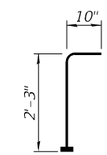

BAR v100(E)
(Headed)

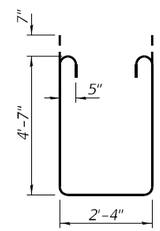

BAR s22(E)

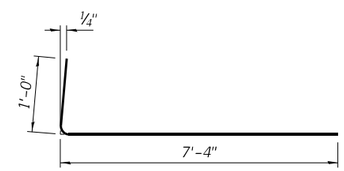

BAR a2(E)

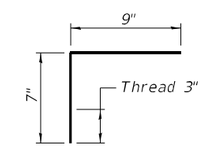

BAR c1(E)

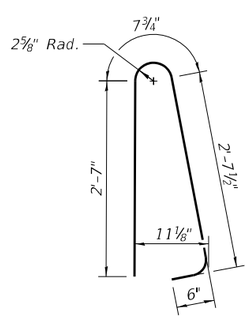

BAR d(E)

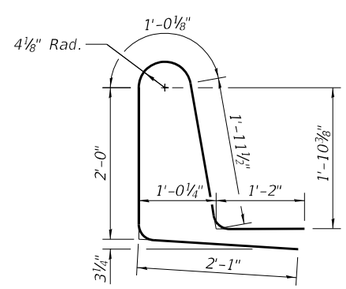

BAR d1(E)

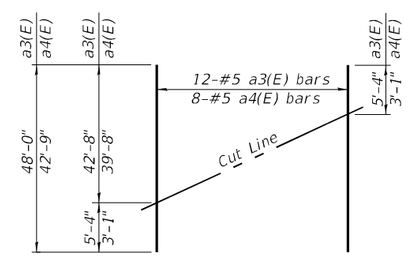

FIELD CUTTING DIAGRAM

Order a3(E) and a4(E) bars full length. Cut as shown and use remainder of bars in opposite end of deck.

SUPERSTRUCTURE BILL OF MATERIAL

Bar	No.	Size	Length	Shape
a(E)	896	#5	46'-1"	
a1(E)	584	#5	45'-9"	
a2(E)	918	#6	8'-4"	
a3(E)	24	#5	48'-0"	
a4(E)	16	#5	42'-9"	
a5(E)	8	#5	46'-8"	
a6(E)	32	#5	1'-6"	
b(E)	1140	#5	28'-2"	
b1(E)	264	#6	33'-5"	
b2(E)	756	#5	30'-11"	
c(E)	254	#5	17'-7"	
c1(E)	500	#5	1'-4"	
d(E)	750	#5	6'-5"	
d1(E)	750	#5	8'-3"	
e(E)	72	#4	16'-9"	
e1(E)	72	#4	17'-7"	
e2(E)	40	#4	19'-8"	
e3(E)	32	#4	27'-6"	
e4(E)	32	#4	28'-8"	
m10(E)	20	#6	46'-8"	
m11(E)	96	#6	6'-4"	
m12(E)	16	#6	2'-9"	
m14(E)	16	#6	3'-0"	
s21(E)	168	#5	8'-5"	
s22(E)	168	#5	12'-8"	
v100(E)	188	#5	3'-1"	
Reinforcement Bars, Epoxy Coated			Lbs.	182,860
Concrete Superstructure			Cu. Yds.	875.1

Bars indicated thus 1 x 2-#4 etc. indicates 1 line of bars with 2 lengths per line.

Notes:
Headed bars shall conform to ASTM A970 with threaded attachment; Class HA; and reinforcement bars conforming to ASTM A706. Cost included with Reinforcement Bars, Epoxy Coated.

(Sheet 2 of 2)

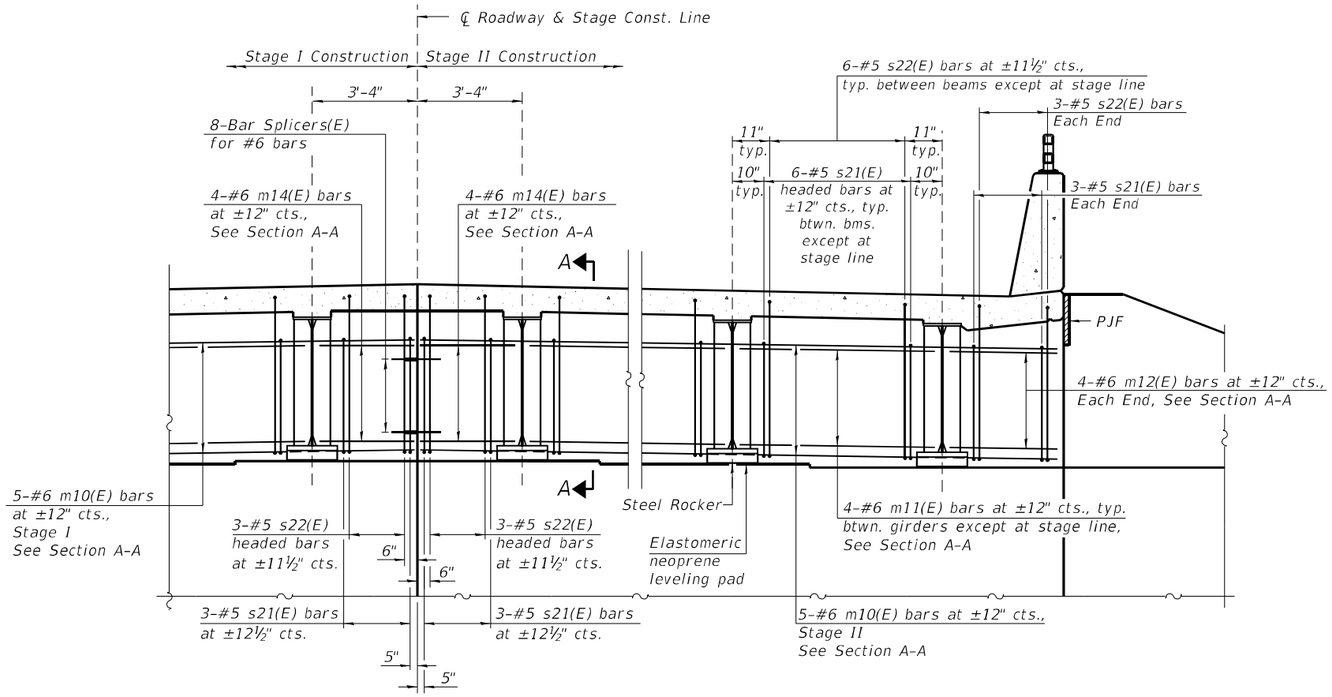

DIAPHRAGM AT ABUTMENT

(Looking North)
(Median not shown for clarity)

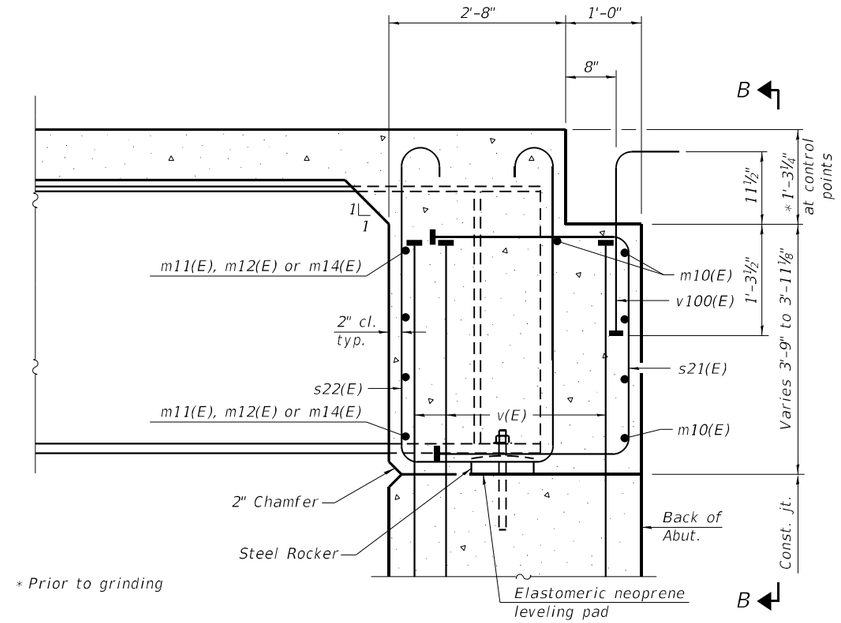

SECTION A-A

(at Rt. L's)

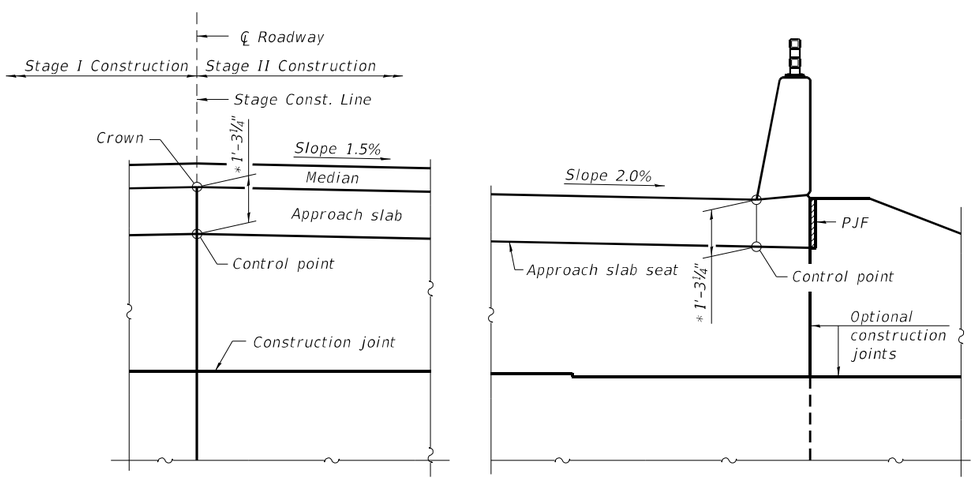

VIEW B-B

(Looking North at South Abutment; North Abutment similar)

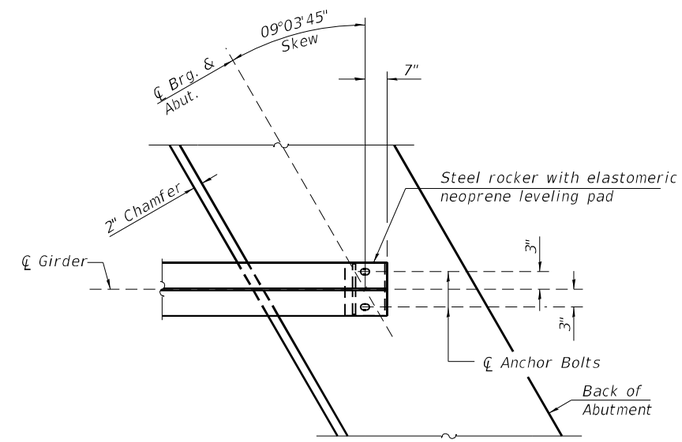

PLAN AT ABUTMENT

(Showing bottom flange of beam)

Notes:
See sheets 13 and 14 of 33 for superstructure details and Bill of Material.
See sheet 16 of 33 for PJF details.
The s21(E) and s22(E) bars shall be placed parallel to the girders. Spacing for these bars shall be at right angles to the girders.
The approach slab seat shall have a constant slope determined from the control points shown.

MODEL: Default
FILE NAME: EX125-3(Final Design\Design Plans\CADD_Sheets\0720254-68886-015-DiaphragmDetails.dgn

LIN ENGINEERING, LTD. Consulting Engineers Springfield, Illinois	USER NAME =	DESIGNED - CZ	REVISED -	STATE OF ILLINOIS DEPARTMENT OF TRANSPORTATION	DIAPHRAGM DETAILS STRUCTURE NO. 072-0254	F.A.U. RTE.	SECTION	COUNTY	TOTAL SHEETS / SHEET NO.
		CHECKED - CL	REVISED -			6578	(72-3HB-4)BR	PEORIA	175 / 100
	PLOT SCALE =	DRAWN - AGJ	REVISED -					CONTRACT NO. 68886	
	PLOT DATE = 6/21/2023	CHECKED - MTH	REVISED -		SHEET 15 OF 33 SHEETS		ILLINOIS	FED. AID PROJECT	

6/21/2023 10:37:46 AM

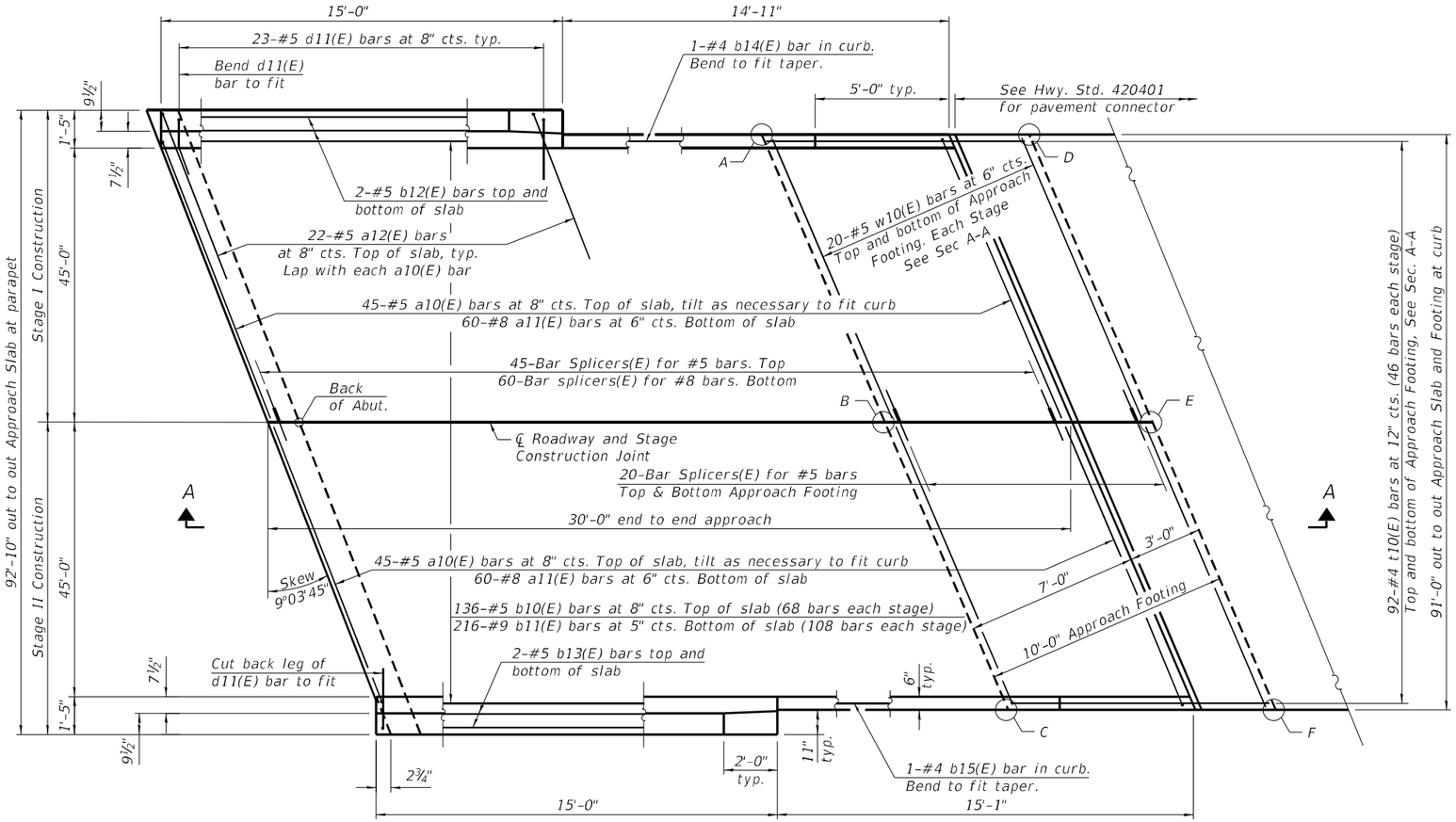

PLAN

(North approach slab shown; South approach slab similar by 180° rotation)
(median not shown for clarity)

TOP AND BOTTOM ELEVATIONS FOR APPROACH FOOTING

South Approach			North Approach		
Point/Location	Top	Bottom	Point/Location	Top	Bottom
A - 193+09.90/45.5' RT	639.29	638.45	A - 195+91.18/45.5' LT	638.02	637.19
B - 193+02.64/℄	639.95	639.11	B - 195+98.44/℄	638.62	637.78
C - 192+95.38/45.5' LT	639.35	638.52	C - 196+05.70/45.5' RT	637.95	637.12
D - 192+99.77/45.5' RT	639.33	638.50	D - 196+01.31/45.5' LT	637.97	637.14
E - 192+92.51/℄	639.99	639.16	E - 196+08.57/℄	638.57	637.74
F - 192+85.26/45.5' LT	639.40	638.56	F - 196+15.82/45.5' RT	637.91	637.08

Note:
See sheet 17 of 33 for Section A-A.

* Prior to grinding
** After grinding

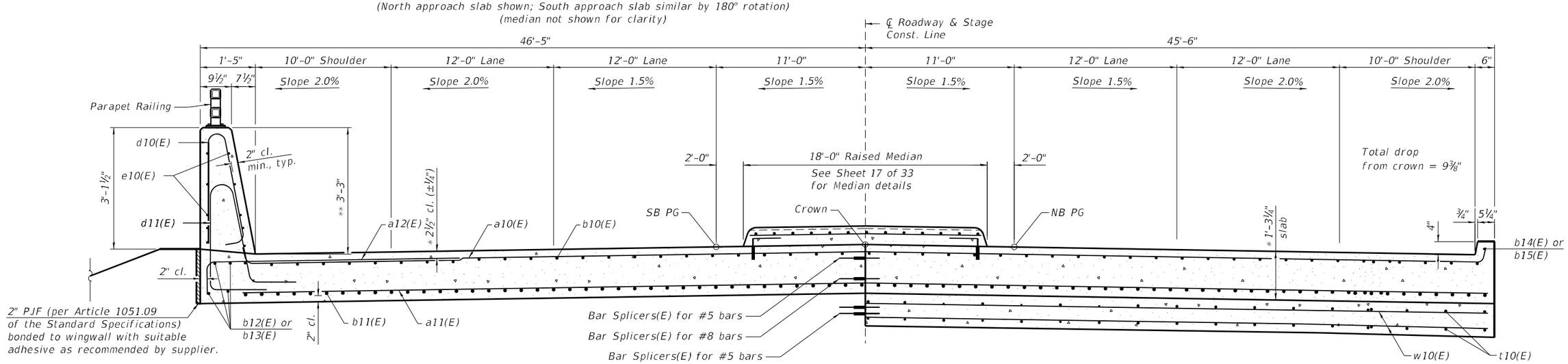

NEAR ABUTMENT

AT APPROACH FOOTING

CROSS SECTION

(Looking North)

(Sheet 1 of 2)

MODEL: Default
FILE NAME: E:\2125-3\Final Design\Design Plans\CADD_Sheets\0720254-68886-016-BridgeApproachSlabDetails.dgn
6/21/2023 10:37:47 AM

LIN ENGINEERING, LTD.
Consulting Engineers
Springfield, Illinois

USER NAME =	DESIGNED - CZ	REVISED -	
	CHECKED - MSS	REVISED -	
PLOT SCALE =	DRAWN - NMD	REVISED -	
PLOT DATE = 6/21/2023	CHECKED - MTH	REVISED -	

STATE OF ILLINOIS
DEPARTMENT OF TRANSPORTATION

BRIDGE APPROACH SLAB DETAILS
STRUCTURE NO. 072-0254

SHEET 16 OF 33 SHEETS

F.A.U. RTE.	SECTION	COUNTY	TOTAL SHEETS	SHEET NO.
6578	(72-3HB-4)BR	PEORIA	175	101
		CONTRACT NO. 68886		
	ILLINOIS	FED. AID PROJECT		

Notes:

The joint opening shall be adjusted for temperature per Article 520.04 of the Standard Specifications. However, since this detail is for jointless structures, the length of bridge used to calculate the adjustment shall be equal to half the total bridge length plus the length of the bridge approach slab.

Parapet concrete shall be paid for as Concrete Superstructure.

Approach slab shall be paid for as Concrete Superstructure (Approach Slab).

Approach footing concrete shall be paid for as Concrete Structures.

The approach footing maximum applied service bearing pressure (Qmax) = 2.0 ksf.

Cost of excavation for approach footing included with Concrete Structures.

For Granular Backfill for Structures and drainage treatment details, see sheet 2 of 33.

See sheet 29 of 33 for Bar Splicer Details.

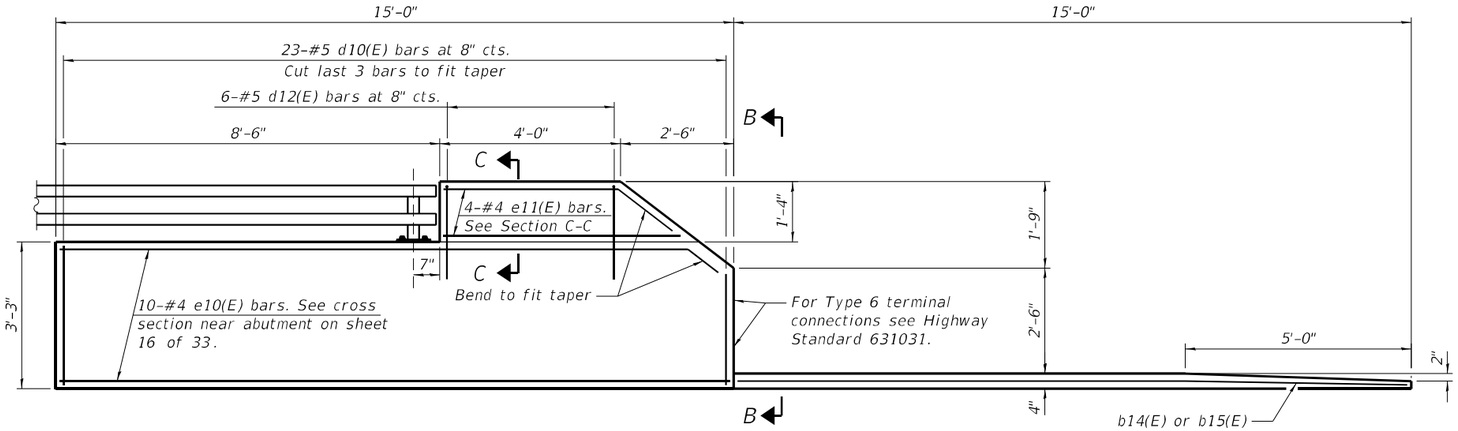

INSIDE ELEVATION OF PARAPET AND CURB

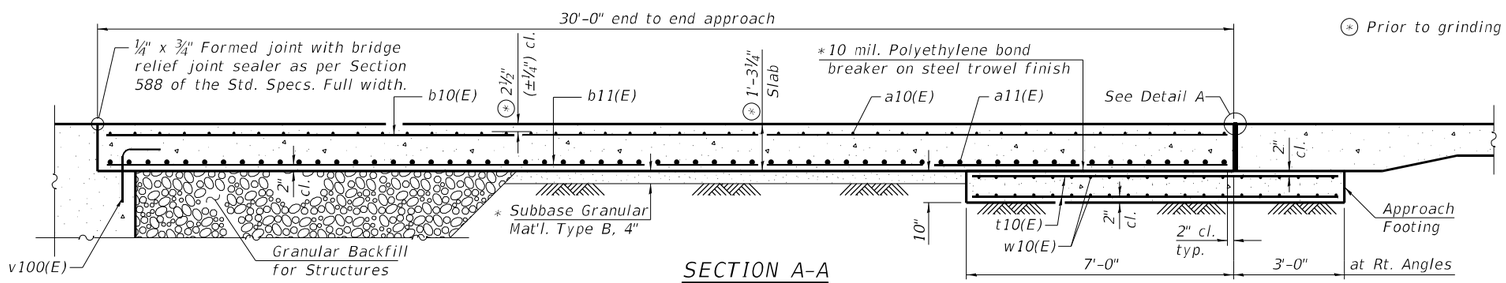

SECTION A-A

(Measurements along ℄ Roadway)

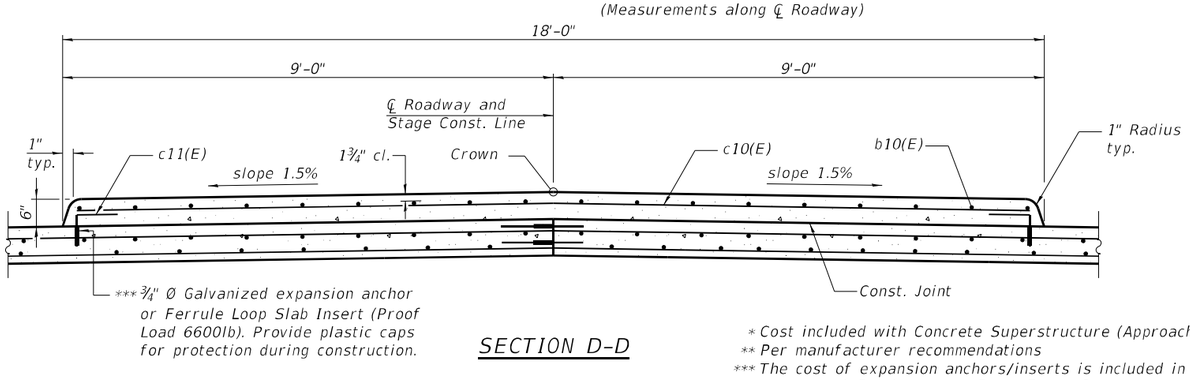

SECTION D-D

* Cost included with Concrete Superstructure (Approach Slab).

** Per manufacturer recommendations

*** The cost of expansion anchors/inserts is included in the cost of Reinforcement Bars, Epoxy Coated.

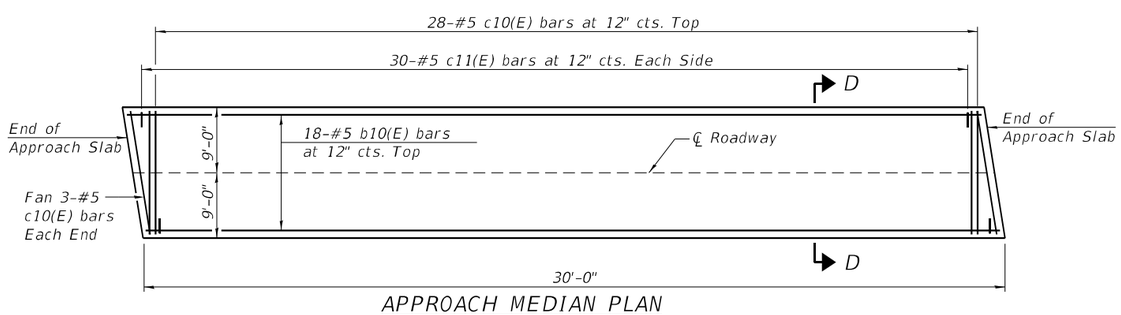

APPROACH MEDIAN PLAN

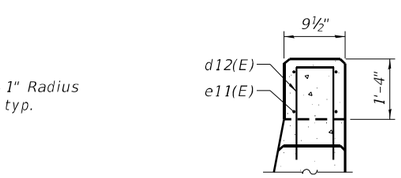

SECTION C-C

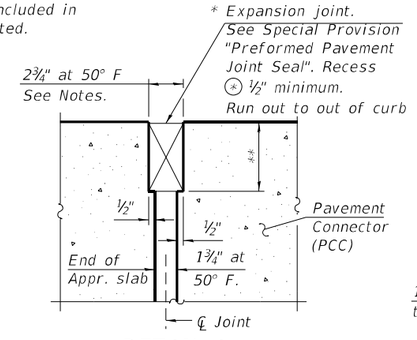

DETAIL A

(at Rt. L's)

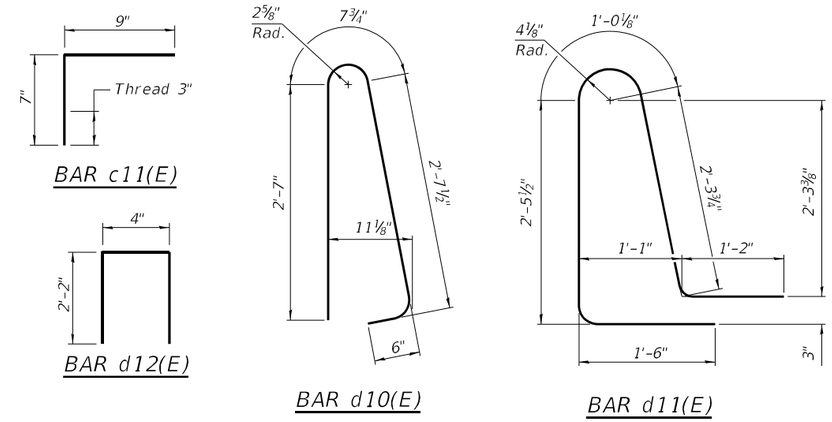

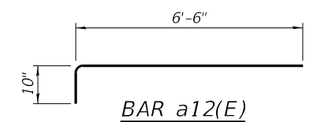

BAR a12(E)

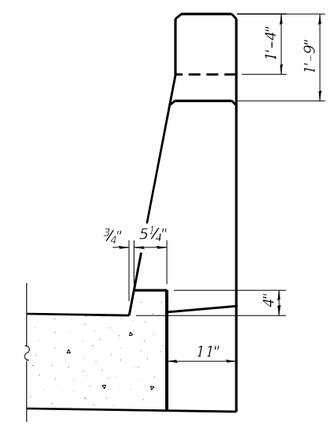

VIEW B-B

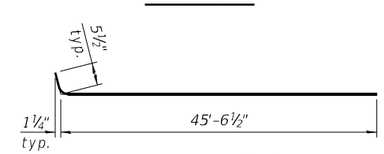

BAR a10(E)

TWO APPROACHES

BILL OF MATERIAL

Bar	No.	Size	Length	Shape
a10(E)	180	#5	46'-0"	
a11(E)	240	#8	45'-9"	
a12(E)	88	#5	7'-4"	
b10(E)	308	#5	29'-8"	
b11(E)	432	#9	29'-8"	
b12(E)	8	#5	14'-10"	
b13(E)	8	#5	14'-8"	
b14(E)	2	#4	14'-8"	
b15(E)	2	#4	14'-10"	
c10(E)	68	#5	17'-7"	
c11(E)	120	#5	1'-4"	
d10(E)	92	#5	6'-5"	
d11(E)	92	#5	8'-6"	
d12(E)	24	#5	4'-8"	
e10(E)	40	#4	14'-8"	
e11(E)	16	#4	5'-4"	
t10(E)	368	#4	9'-10"	
w10(E)	160	#5	45'-9"	
Concrete Superstructure			Cu. Yd.	28.6
Concrete Superstructure (Approach Slab)			Cu. Yd.	260.4
Concrete Structures			Cu. Yd.	57.0
Reinforcement Bars, Epoxy Coated			Pound	105,480

(Sheet 2 of 2)

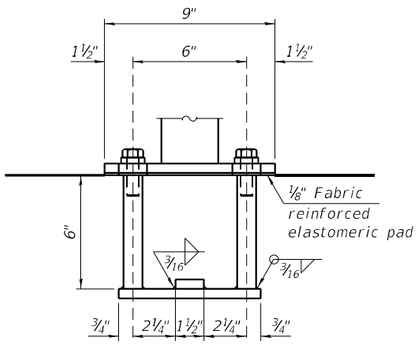

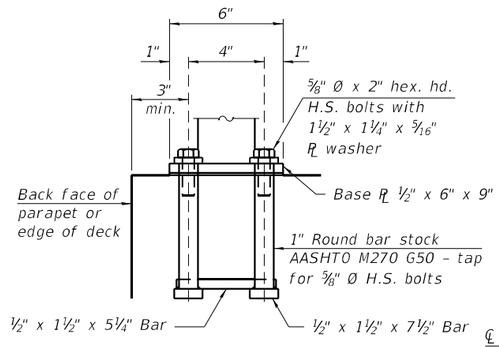

ANCHORAGE ASSEMBLY

The anchorage device shall be cast-in-place.

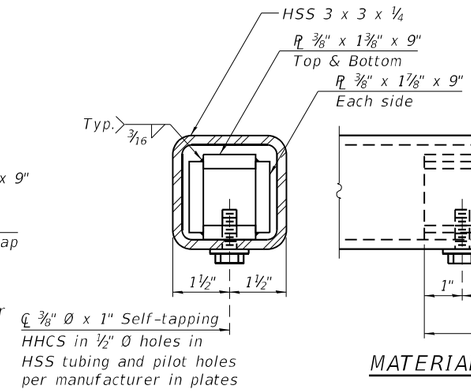

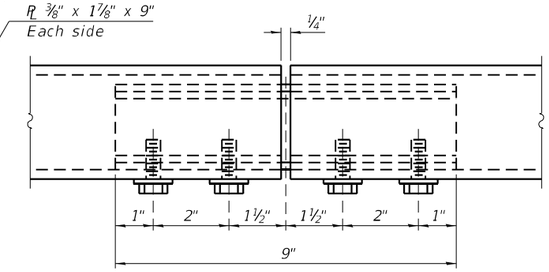

MATERIAL SPLICE

Notes:

Place reinforcement bars to miss anchor rod locations.

All HSS tubing used for the Parapet Railing shall be CVN tested according to Article 1006.34(b) of the Standard Specifications.

All HSS tubing used for the Parapet Railing shall be ASTM A500 grade C.

All base plates used for the Parapet Railing shall be AASHTO M270 grade 50.

All heavy hex nuts shall be according to ASTM A 563 grade DH.

All fully threaded anchor rods shall be ASTM F1554 grade 105.

The post base plate shall be fastened to the curb snug tight and given an additional ⅙" turn.

Rail splice inserts may be built out of bent plates of the same thicknesses and outside geometry limits as the 4 plate rail splice inserts shown.

All steel rail elements shall be galvanized according to Article 509.05 of the Standard Specifications.

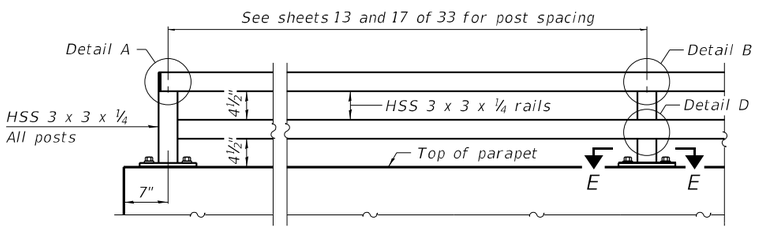

ELEVATION PARAPET RAILING

(Inside face)

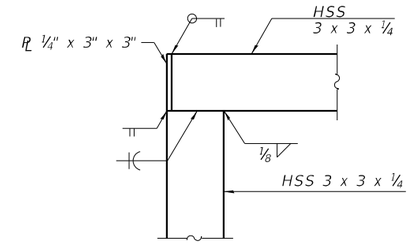

DETAIL A

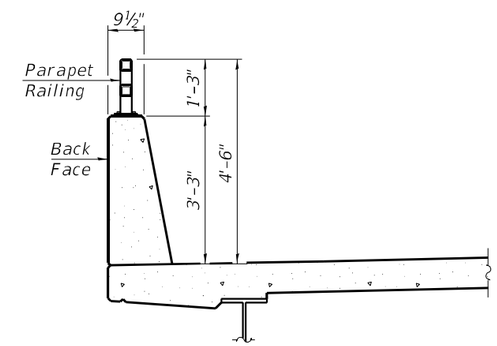

SECTION THRU DECK

RAILING CRITERIA

MASH 2016 Test Level	4
Parapet Railing Weight (plf)	25
Max Post Spacing	10'-0"

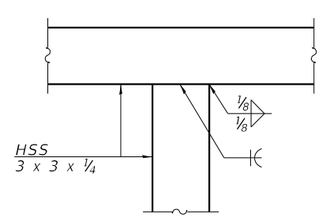

DETAIL B

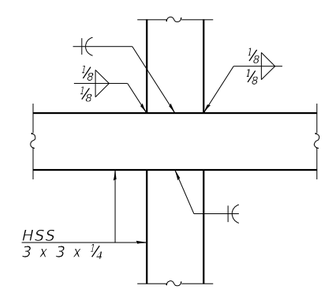

DETAIL D

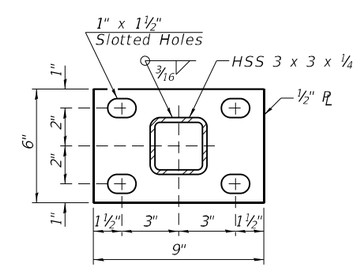

SECTION E-E

BILL OF MATERIAL

Item	Unit	Quantity
Parapet Railing	Foot	534

MODEL: Default
FILE NAME: E:\2125-3\Final Design\Design Plans\CADD_Sheets\0720254-68886-018-ParapetRailing.dgn

6/21/2023 10:37:49 AM

LIN ENGINEERING, LTD.
Consulting Engineers
Springfield, Illinois

USER NAME =	DESIGNED - CZ	REVISED -	
	CHECKED - CL	REVISED -	
PLOT SCALE =	DRAWN - AJF	REVISED -	
PLOT DATE = 6/21/2023	CHECKED - MTH	REVISED -	

STATE OF ILLINOIS
DEPARTMENT OF TRANSPORTATION

PARAPET RAILING
STRUCTURE NO. 072-0254

SHEET 18 OF 33 SHEETS

F.A.U. RTE.	SECTION	COUNTY	TOTAL SHEETS	SHEET NO.
6578	(72-3HB-4)BR	PEORIA	175	103
		CONTRACT NO. 68886		
	ILLINOIS	FED. AID PROJECT		

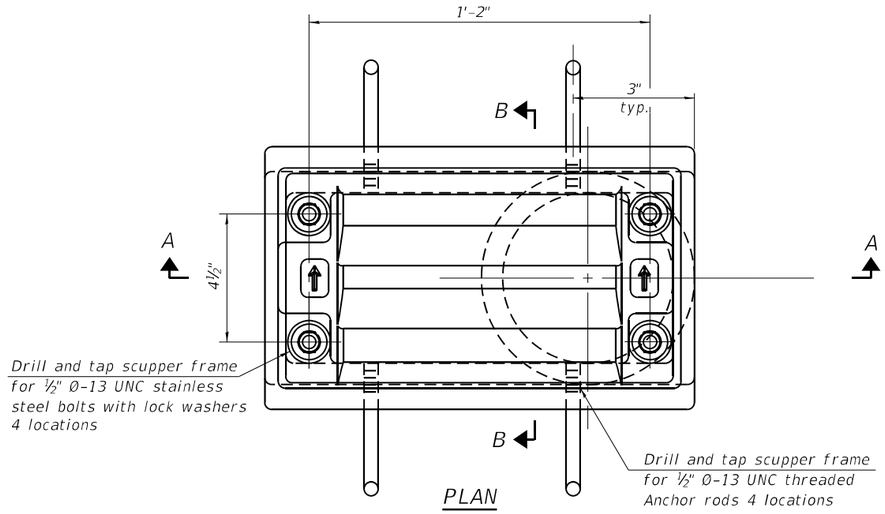

PLAN

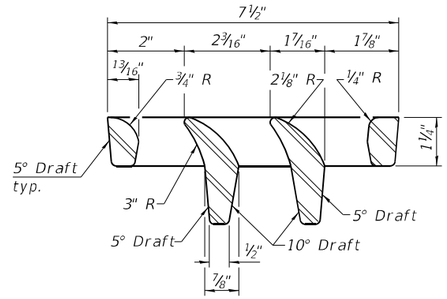

VANE GRATE DETAIL

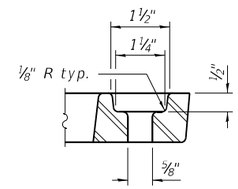

GRATE BOLT HOLE DETAIL

Notes:

All cast iron parts shall be gray iron conforming to the requirements of AASHTO M105, Class 35B and AASHTO M306.

Bolts, anchor rods, nuts and washers shall be according to ASTM A307 and shall be galvanized according to AASHTO M232. As an alternate stainless steel may be used.

Stainless steel hardware shall be according to Article 1006.29(d) of the Standard Specifications.

Structural steel weldments of equal sections and of the same configuration may be substituted for the cast iron scupper frames and downspouts; however, the scupper grates shall remain cast iron. Fillet or full penetration welds shall be used for the weldments. Details shall be submitted to the Engineer for approval.

Structural steel scupper frames and downspouts, when utilized, shall be galvanized according to AASHTO M111.

As an alternate, fiberglass may be used for downspouts according to ASTM D2996 with a short-time rupture strength hoop tensile stress of 30,000 psi min. in lieu of the cast iron or structural steel.

Exterior surfaces of downspouts and exterior exposed surfaces of the scupper frame below deck shall be painted according to Article 506 with the finish coat as specified. The exterior surfaces shall be cleaned according to the Society of Protective Coating's Spec. SSPC-SP1 prior to painting.

The Contractor shall take appropriate measures to assure that Protective Coat is not applied to the scupper.

Cost of the grate, frame, downspout, anchor rods, nuts and washers including complete installation of the scupper shall be paid for at the contract unit price for Drainage Scuppers, DS-11.

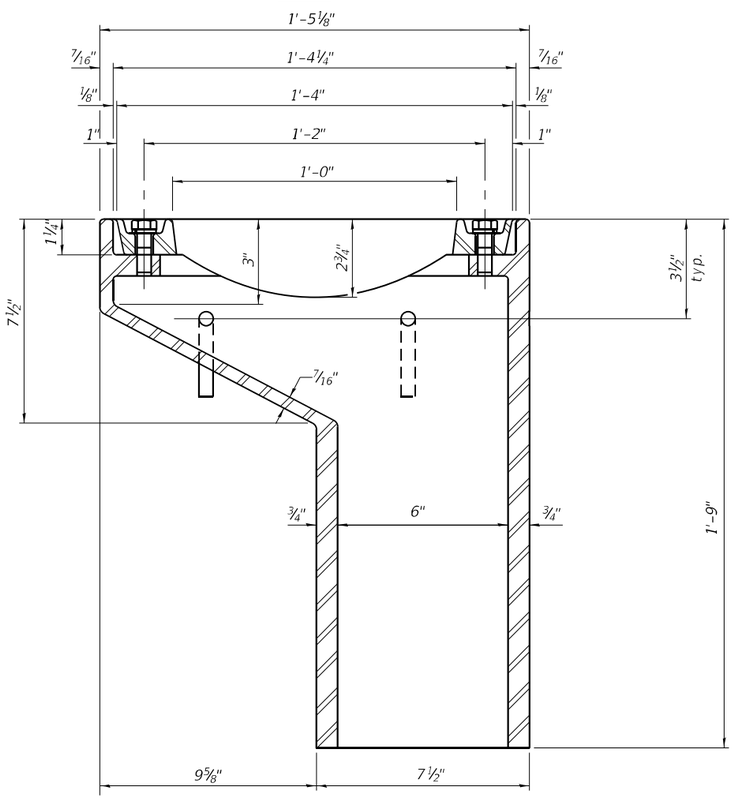

SECTION A-A

See sheet 13 of 33 for scupper location relative to parapet.

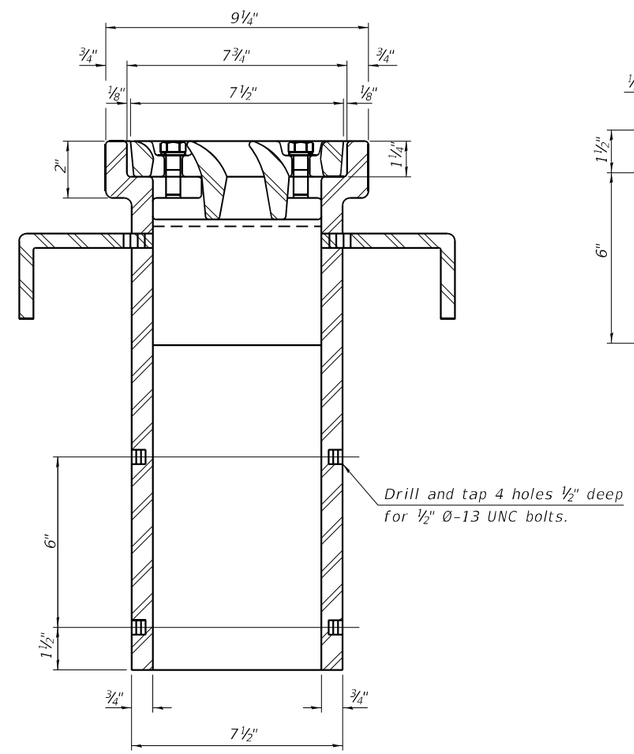

SECTION B-B

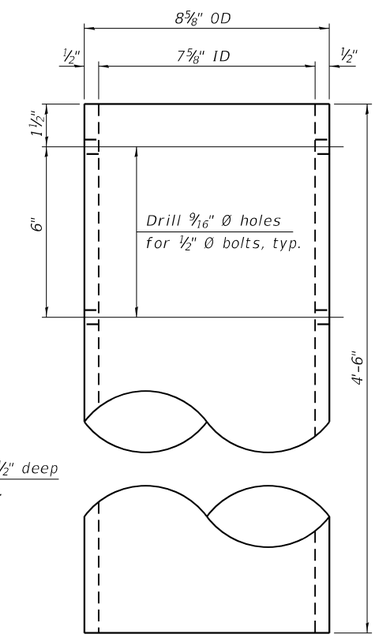

DOWNSPOUT

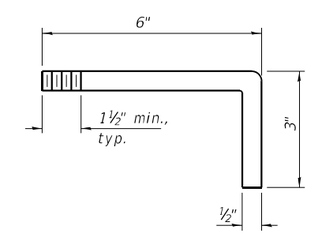

ANCHOR ROD DETAIL

BILL OF MATERIAL

ITEM	UNIT	QUANTITY
Drainage Scuppers, DS-11	Each	4

DS-11 2-1-2023

LIN ENGINEERING, LTD.
Consulting Engineers
Springfield, Illinois

USER NAME =	DESIGNED - CZ	REVISED -	
	CHECKED - CL	REVISED -	
PLOT SCALE =	DRAWN - AJF	REVISED -	
PLOT DATE = 8/12/2023	CHECKED - MTH	REVISED -	

STATE OF ILLINOIS
DEPARTMENT OF TRANSPORTATION

DRAINAGE SCUPPERS, DS-11
STRUCTURE NO. 072-0254

SHEET 19 OF 33 SHEETS

F.A.U. RTE.	SECTION	COUNTY	TOTAL SHEETS	SHEET NO.
6578	(72-3HB-4)BR	PEORIA	175	104

CONTRACT NO. 68886

ILLINOIS FED. AID PROJECT

MODEL: Default
FILE NAME: E:\2125-3\Final Design\Design Plans\CADD_Sheets\0720254-68886-019-DrainageScuppers.dgn
8/12/2023 11:23:16 AM

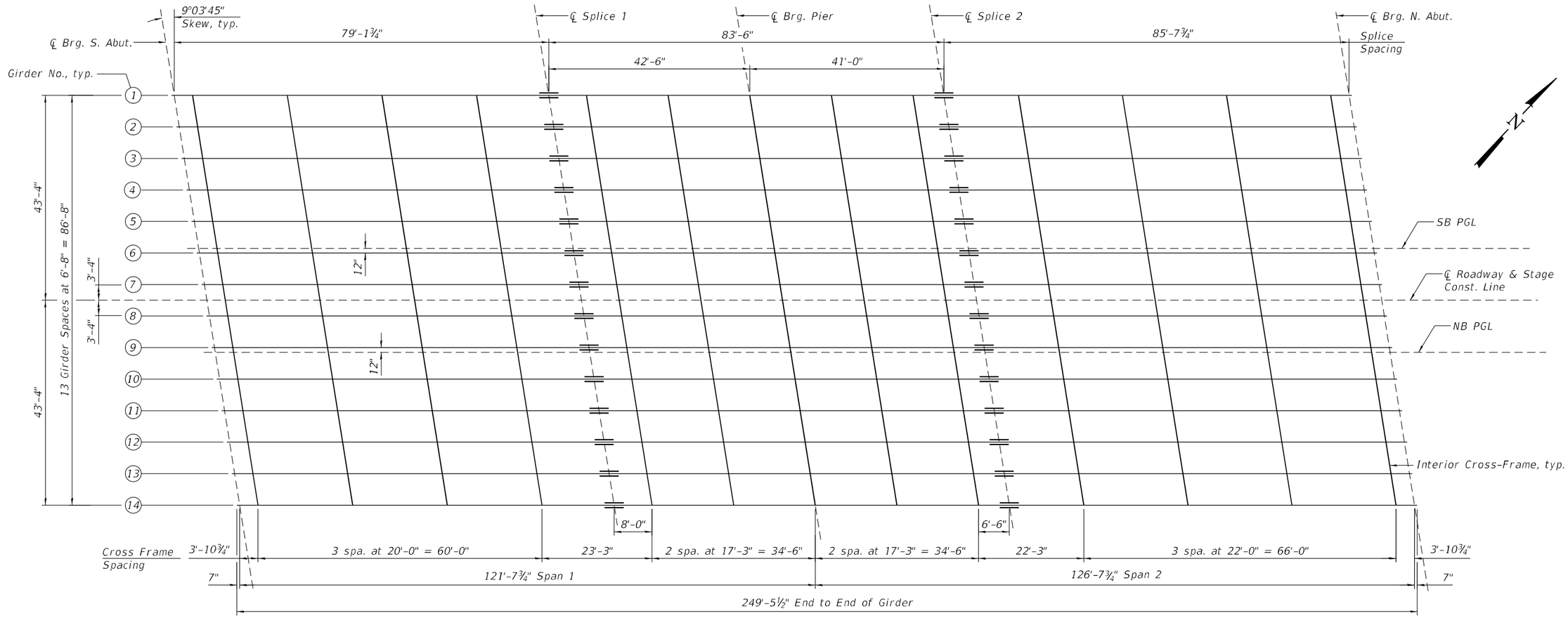

FRAMING PLAN

Notes:
All girder flanges, webs, and bearing stiffeners shall be AASHTO M270 Grade 50.
For Section A-A see sheet 21 of 33.
For Detail B see sheet 21 of 33.

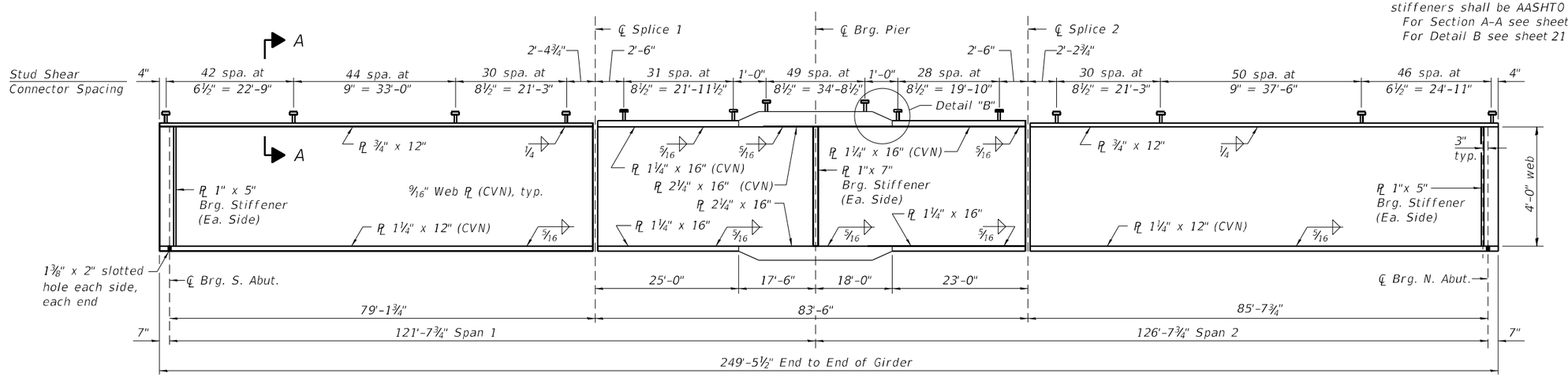

GIRDER ELEVATION

"CVN" denotes Charpy-V-Notch impact energy requirements, zone 2.

MODEL: Default
FILE NAME: E:\2125-3\Final Design\Design Plans\CADD_Sheets\0720254-68886-020-FramingPlan.dgn
6/21/2023 10:37:50 AM

LIN ENGINEERING, LTD. Consulting Engineers Springfield, Illinois	USER NAME =	DESIGNED - CZ	REVISED -	STATE OF ILLINOIS DEPARTMENT OF TRANSPORTATION	FRAMING PLAN STRUCTURE NO. 072-0254
		CHECKED - CL	REVISED -		
	PLOT SCALE =	DRAWN - AGJ	REVISED -		
	PLOT DATE = 6/21/2023	CHECKED - MTH	REVISED -		SHEET 20 OF 33 SHEETS

F.A.U. RTE.	SECTION	COUNTY	TOTAL SHEETS	SHEET NO.
6578	(72-3HB-4)BR	PEORIA	175	105
		CONTRACT NO. 68886		
	ILLINOIS	FED. AID PROJECT		

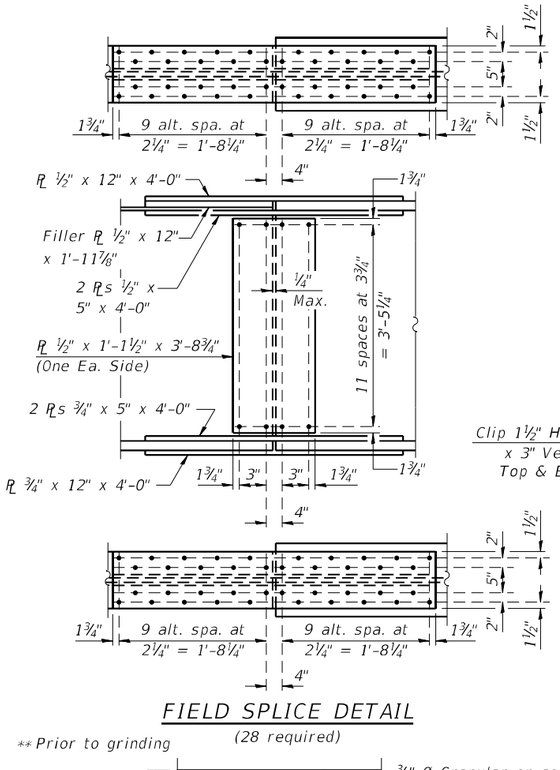

FIELD SPLICE DETAIL

(28 required)

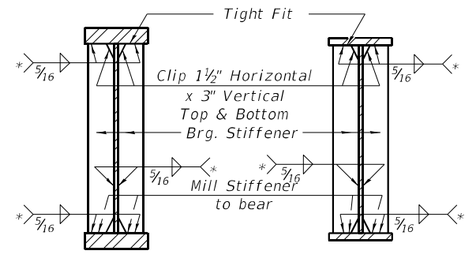

SECTION AT PIER

SECTION AT ABUTMENT

* Terminate ¼" (±⅛") from the end of plate intersects.

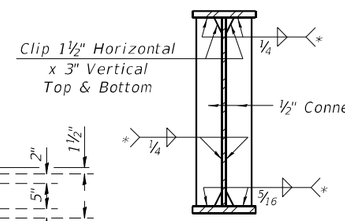

SECTION AT CONNECTION PL

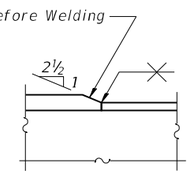

DETAIL "B"

FIELD SPLICE DETAIL

(28 required)

** Prior to grinding

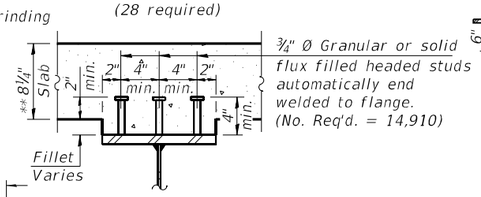

SECTION A-A

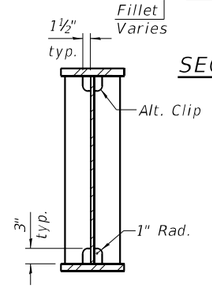

ALT. CLIP DETAIL

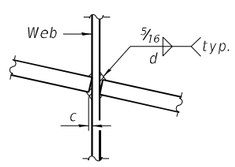

c = 3/16" (Stiff. PL); 1/16" (Conn. PL)
d = ½" (Stiff. PL); ⅜" (Conn. PL)

WEB WELD DETAIL

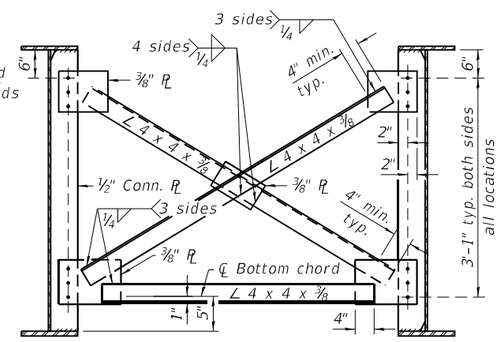

TYPICAL INTERIOR CROSS-FRAME

(169 Required)

INTERIOR GIRDER MOMENT TABLE				
		0.4 Sp. 1	Pier	0.6 Sp. 2
Is	(in⁴)	19,188	50,666	19,188
Ic(n)	(in⁴)	53,706	–	53,706
Ic(3n)	(in⁴)	39,050	–	39,050
Ic(cr)	(in⁴)	–	54,129	–
Ss	(in³)	860	1,930	860
Sc(n)	(in³)	1,252	–	1,252
Sc(3n)	(in³)	1,141	–	1,141
Sc(cr)	(in³)	–	1,971	–
Sx	(in³)	1,138	1,990	1,118
DC1	(k/')	0.882	1.050	0.882
MDC1	('k)	719	2,162	835
DC2	(k/')	0.225	0.225	0.225
MDC2	('k)	202	504	234
DW	(k/')	0.333	0.333	0.333
MDW	('k)	289	719	335
LLDF		0.536	0.535	0.533
M_{LL+IM}	('k)	1,478	1,927	1,529
f_ℓ (Strength I)	(ksi)	0	0	0
Mu + 1/3 f_ℓ Sx	('k)	4,171	7,783	4,515
Øf Mn	('k)	6,163	8,238	6,056
fs DC1	(ksi)	10.03	13.44	11.65
fs DC2	(ksi)	2.12	3.07	2.46
fs DW	(ksi)	3.04	4.38	3.52
fs (LL+IM)	(ksi)	14.17	11.73	14.65
f_ℓ (Service II)	(ksi)	0	0	0
fs + f_ℓ/2 (Service II)	(ksi)	33.61	36.14	36.69
Service II Resistance	(ksi)	47.50	47.50	47.50
fs + f_ℓ/3 (Strength I)	(ksi)	44.55	47.74	48.57
Øf Fn	(ksi)	–	–	–
Vf	(k)	69.4	67.7	68.8

GIRDER REACTION TABLE							
		S. Abut.		Pier		N. Abut.	
		Interior	Exterior	Interior	Exterior	Interior	Exterior
LLDF		0.647	0.619	0.647	0.619	0.647	0.619
OCF		–	1.03	–	–	–	1.03
RDC1	(k)	35.4	33.9	149.3	143.5	38.2	36.6
RDC2	(k)	9.5	7.8	36.0	29.4	10.3	8.4
RDW	(k)	13.6	10.2	51.5	38.6	14.7	11.0
R_{LL}	(k)	64.6	53.9	132.0	110.1	65.3	54.5
R_{IM}	(k)	21.5	18.0	44.0	36.7	21.8	18.2
	***	227.5	193.2	616.8	530.8	235.0	199.8
	****	189.8	161.8	539.9	466.7	196.9	168.0

*** RTotal (Strength I)(Impact) (k)
**** RTotal (Strength I)(No Impact) (k)

Notes:
"CVN" denotes Charpy-V-Notch impact energy requirements, zone 2.
All cross frames shall be installed as steel is erected and secured with erection pins and bolts except as otherwise noted. Individual cross frames at supports may be temporarily disconnected to install bearing anchor rods.
Two hardened washers required for each set of oversized holes.
All flange and web splice plates, except filler plates, shall be AASHTO M270 Grade 50 (CVN).
Detail 15/16" Ø holes for all ¾" Ø bolts at all interior cross frames.

Is, Ss: Non-composite moment of inertia and section modulus of the steel section used for computing fs(Total-Strength I, and Service II) due to non-composite dead loads (in.⁴ and in.³).
Ic(n), Sc(n): Composite moment of inertia and section modulus of the steel and deck based upon the modular ratio, "n", used for computing fs(Total-Strength I, and Service II) in uncracked sections due to short-term composite live loads (in.⁴ and in.³).
Ic(3n), Sc(3n): Composite moment of inertia and section modulus of the steel and deck based upon 3 times the modular ratio, "3n", used for computing fs(Total-Strength I, and Service II) in uncracked sections, due to long-term composite (superimposed) dead loads (in.⁴ and in.³).
Ic(cr), Sc(cr): Composite moment of inertia and section modulus of the steel and longitudinal deck reinforcement, used for computing fs (Total-Strength I and Service II) in cracked sections, due to both short-term composite live loads and long-term composite (superimposed) dead loads (in.⁴ and in.³).
Sx: Section modulus about the major axis of the section to the controlling flange, tension or compression, taken as yield moment with respect to the controlling flange over the yield strength of the controlling flange. (in.³).
DC1: Un-factored non-composite dead load (kips/ft.).
MDC1: Un-factored moment due to non-composite dead load (kip-ft.).
DC2: Un-factored long-term composite (superimposed excluding future wearing surface) dead load (kips/ft.).
MDC2: Un-factored moment due to long-term composite (superimposed excluding future wearing surface) dead load (kip-ft.).
DW: Un-factored long-term composite (superimposed future wearing surface only) dead load (kips/ft.).
MDW: Un-factored moment due to long-term composite (superimposed future wearing surface only) dead load (kip-ft.).
M_{LL+IM}: Un-factored live load moment plus dynamic load allowance (impact) (kip-ft.).
Mu: Strength I load combination of factored design moment (kip-ft.). 1.25 (MDC1 + MDC2) + 1.5 MDW + 1.75 M_{LL+IM}
f_ℓ: Factored calculated flange lateral bending stress as calculated using Article 6.10.1.6 and as further simplified by IDOT provisions (ksi).
Øf Mn: Factored nominal flexural resistance of the section determined as specified in Article 6.10.7.1 or A6 applicable (kip-ft.).
fs DC1: Un-factored stress at edge of flange for controlling steel flange due to vertical non-composite dead loads as calculated below (ksi).
MDC1/ Ss
fs DC2: Un-factored stress at edge of flange for controlling steel flange due to vertical composite dead loads as calculated below (ksi).
MDC2/ Sc(3n) or MDC2/ Sc(cr) as applicable.
fs DW: Un-factored stress at edge of flange for controlling steel flange due to vertical composite future wearing surface loads as calculated below (ksi).
MDW/ Sc(3n) or MDW/ Sc(cr) as applicable.
fs (LL+IM): Un-factored stress at edge of flange for controlling steel flange due to vertical composite live load plus impact loads as calculated below (ksi).
M_{LL+IM} / Sc(n) or M_{LL+IM} / Sc(cr) as applicable.
fs + f_ℓ/2 (Service II): Sum of stresses as computed below (ksi).
fsDC1 + fsDC2 + fsDW + 1.3 fs(LL+IM) + f_ℓ/2
Service II Resistance: Composite ($0.95R_hF_{yf}$) or noncomposite ($0.80R_hF_{yf}$) stress capacity according to Article 6.10.4.2 (ksi)
fs + f_ℓ/3 (Strength I): Sum of stresses as computed below on non-compact section (ksi).
1.25(f_sDC1 + f_sDC2) + 1.5f_sDW + 1.75f_s (LL+IM) + f_ℓ/3
Øf Fn: Factored nominal flexural resistance of the section as specified in Article 6.10.7.2 or 6.10.8 as applicable (ksi).
Vf: Maximum factored shear range in span computed according to Article 6.10.10.
LLDF: Live Load Distribution Factor for moment and shear computed according to Article 4.6.2.2 and further IDOT provisions.
OCF: Obtuse Correction Factor according to Article 4.6.2.2.3c or as further simplified by IDOT provisions.

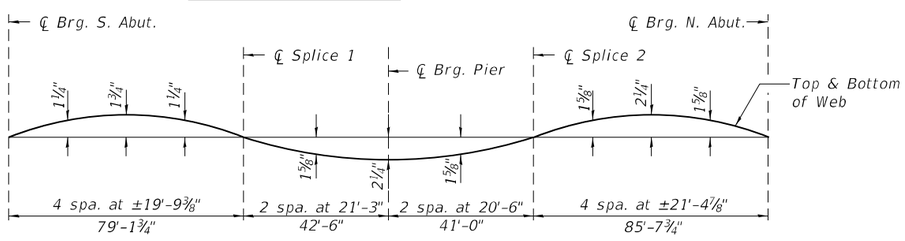

CAMBER DIAGRAM

TOP OF WEB ELEVATIONS

(For Fabrication Only)

Location	Girder 1	Girder 2	Girder 3	Girder 4	Girder 5	Girder 6	Girder 7	Girder 8	Girder 9	Girder 10	Girder 11	Girder 12	Girder 13	Girder 14
℄ Brg. S. Abut.	639.73	639.85	639.98	640.11	640.21	640.30	640.40	640.39	640.29	640.18	640.08	639.94	639.80	639.66
℄ Splice 1	639.39	639.52	639.65	639.78	639.88	639.97	640.07	640.06	639.96	639.85	639.75	639.61	639.48	639.34
℄ Brg. Pier	639.03	639.17	639.29	639.42	639.52	639.62	639.71	639.71	639.60	639.50	639.39	639.25	639.11	638.98
℄ Splice 2	639.06	639.20	639.32	639.45	639.55	639.65	639.74	639.74	639.63	639.53	639.41	639.28	639.13	639.00
℄ Brg. N. Abut.	638.61	638.74	638.87	638.99	639.09	639.19	639.28	639.28	639.17	639.07	638.96	638.82	638.68	638.55

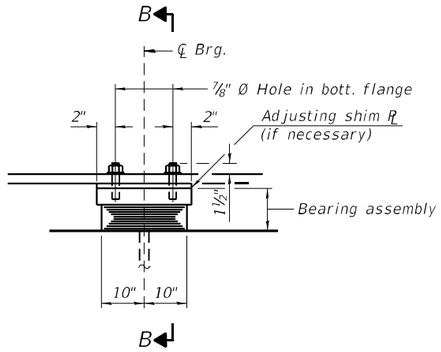

ELEVATION AT PIER

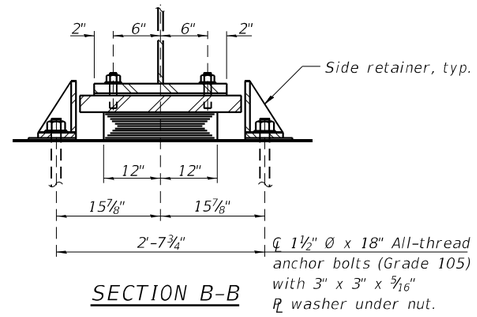

SECTION B-B

TYPE I ELASTOMERIC EXP. BRG.

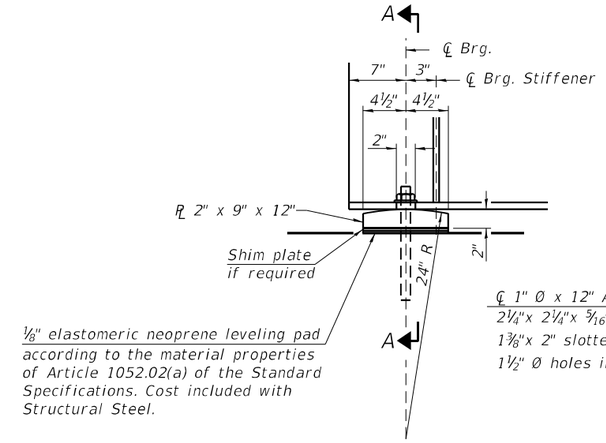

ELEVATION AT ABUTMENT

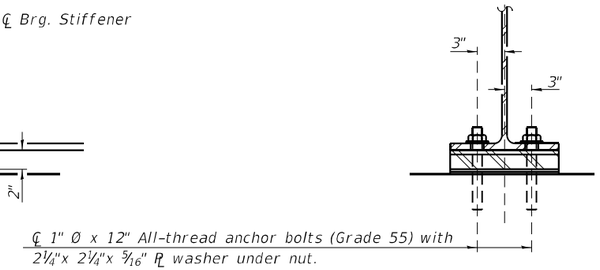

SECTION A-A

FIXED BEARING

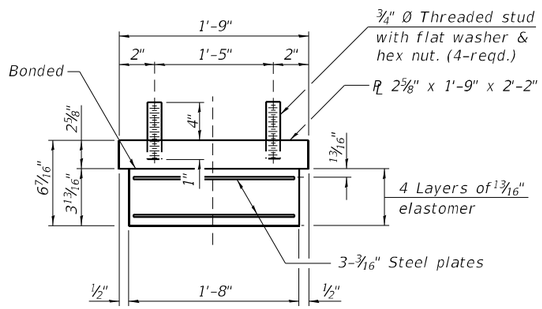

BEARING ASSEMBLY

Note:
Shim plates shall not be placed under bearing assembly.

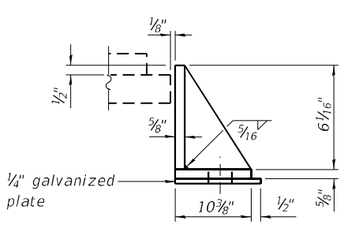

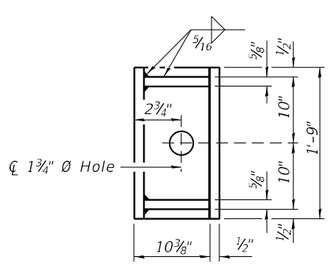

SIDE RETAINER

Equivalent rolled angle with stiffeners will be allowed in lieu of welded plates.

Notes:

Anchor bolts shall be according to Article 521.06 of the Standard Specifications.

Beams shall be braced for stability during erection and remain braced until deck is poured and cured.

Side retainers and stainless steel plates shall be included in the cost of Elastomeric Bearing Assembly, Type I.

Anchor bolts and side retainers at all supports shall be installed as each member is erected unless an equivalent temporary means of lateral restraint is used.

Two ⅛ in. adjusting shims shall be provided for each bearing in addition to all other plates or shims and placed as shown on bearing details.

The structural steel plates of the Bearing Assembly shall conform to the requirements of AASHTO M270 Grade 50.

Cost of Fixed Bearing Assemblies at abutments included in Furnishing and Erecting Structural Steel.

All bearing assemblies, shim plates, side retainers, anchor bolts, nuts and washers, etc. shall be hot-dip galvanized. See Special Provisions for "Hot Dip Galvanizing for Structural Steel".

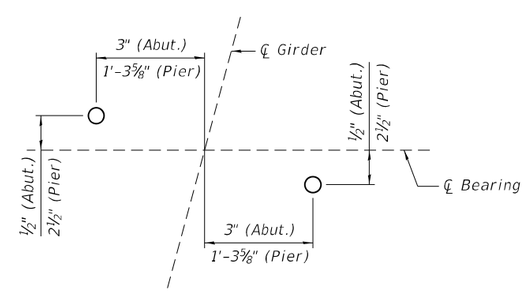

ANCHOR BOLT LAYOUT

BILL OF MATERIAL

Item	Unit	Total
Elastomeric Bearing Assembly Type I	Each	14
Anchor Bolts, 1"	Each	56
Anchor Bolts, 1½"	Each	28

MODEL: Default
FILE NAME: E:\2125-3\Final Design\Design Plans\CADD_Sheets\0720254-68886-022-BearingDetails.dgn
6/21/2023 10:37:51 AM

LIN ENGINEERING, LTD.
Consulting Engineers
Springfield, Illinois

USER NAME =	DESIGNED - CZ	REVISED -	
	CHECKED - AGJ	REVISED -	
PLOT SCALE =	DRAWN - AJF	REVISED -	
PLOT DATE = 6/21/2023	CHECKED - MTH	REVISED -	

STATE OF ILLINOIS
DEPARTMENT OF TRANSPORTATION

BEARING DETAILS
STRUCTURE NO. 072-0254

SHEET 22 OF 33 SHEETS

F.A.U. RTE.	SECTION	COUNTY	TOTAL SHEETS	SHEET NO.
6578	(72-3HB-4)BR	PEORIA	175	107
		CONTRACT NO. 68886		
	ILLINOIS	FED. AID PROJECT		

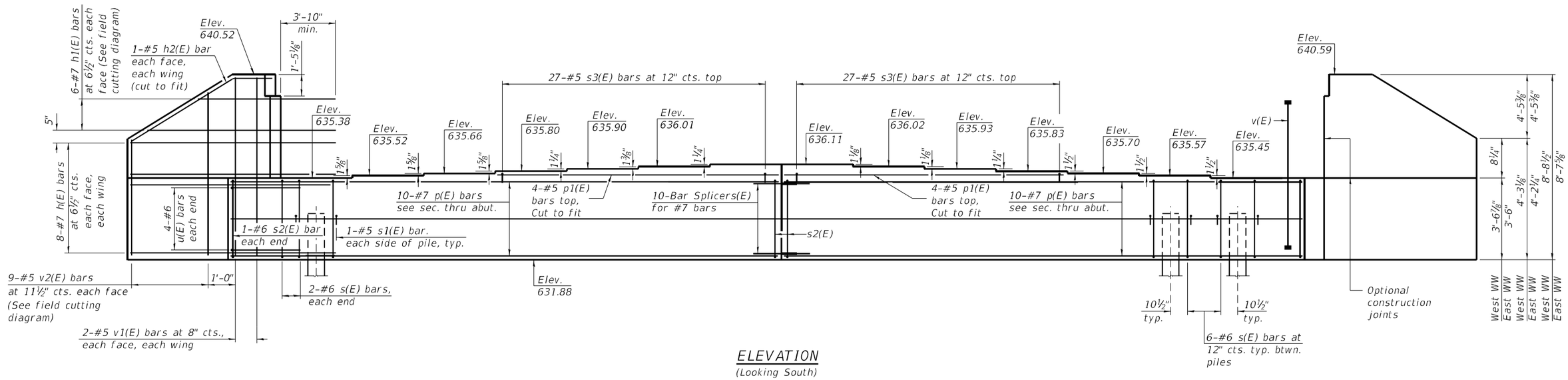

ELEVATION
(Looking South)

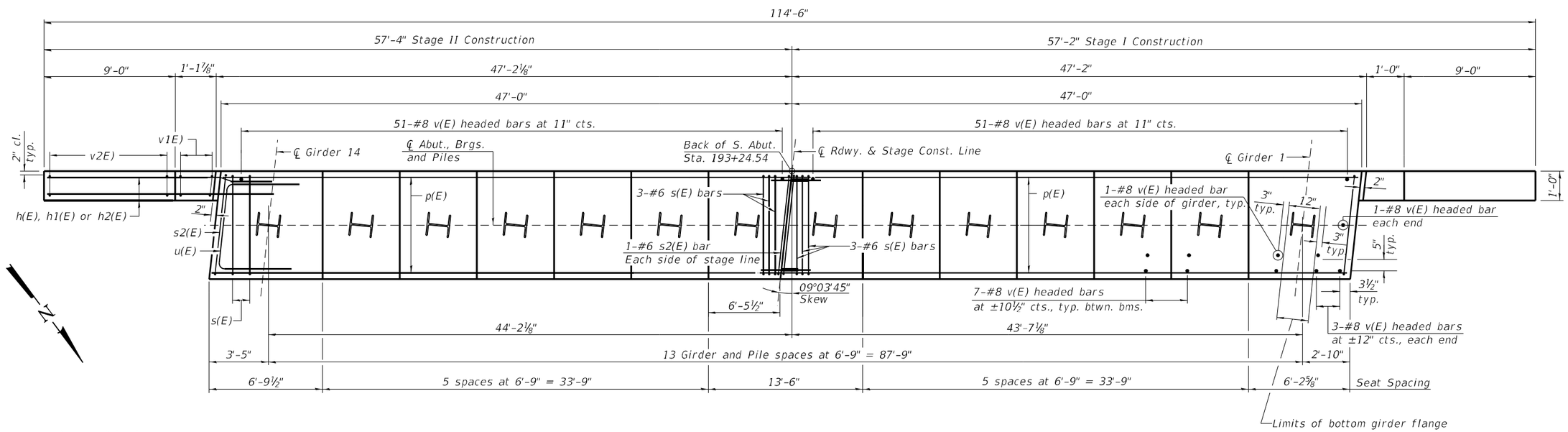

PLAN

PILE DATA

Type: HP 12 x 63 w/ pile shoes
Nominal Required Bearing: 497 kips
Factored Resistance Available: 273 kips
Est. Length: 28 ft
No. Production Piles: 13
No. Test Piles: 1

Notes:
Pour steps monolithically with cap.
Space reinforcement in cap to miss anchor bolts.
See sheet 28 of 33 for details of piles.
See sheet 29 of 33 for details of Bar splicers.
See sheet 22 of 33 for details of Anchor bolt layout.
See sheet 2 of 33 for drainage details.
See sheet 25 of 33 for section thru abutment, field cutting diagram, bar details and Bill of Material.

MODEL: Default
FILE NAME: E:\2125-3\Final Design\Design Plans\CADD_Sheets\0720254-68886-023-Abutments.dgn
6/21/2023 10:37:52 AM

LIN ENGINEERING, LTD. Consulting Engineers Springfield, Illinois	USER NAME =	DESIGNED - CZ	REVISED -	STATE OF ILLINOIS DEPARTMENT OF TRANSPORTATION	SOUTH ABUTMENT STRUCTURE NO. 072-0254	F.A.U. RTE.	SECTION	COUNTY	TOTAL SHEETS / SHEET NO.
		CHECKED - CL	REVISED -			6578	(72-3HB-4)BR	PEORIA	175 / 108
	PLOT SCALE =	DRAWN - MSS	REVISED -					CONTRACT NO. 68886	
	PLOT DATE = 6/21/2023	CHECKED - MTH	REVISED -		SHEET 23 OF 33 SHEETS		ILLINOIS	FED. AID PROJECT	

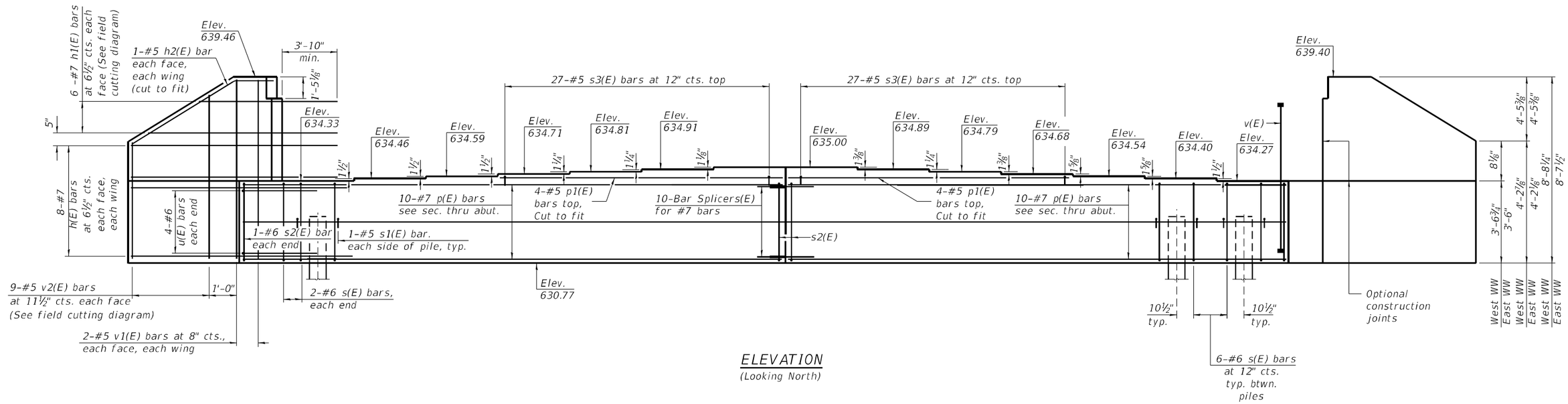

ELEVATION
(Looking North)

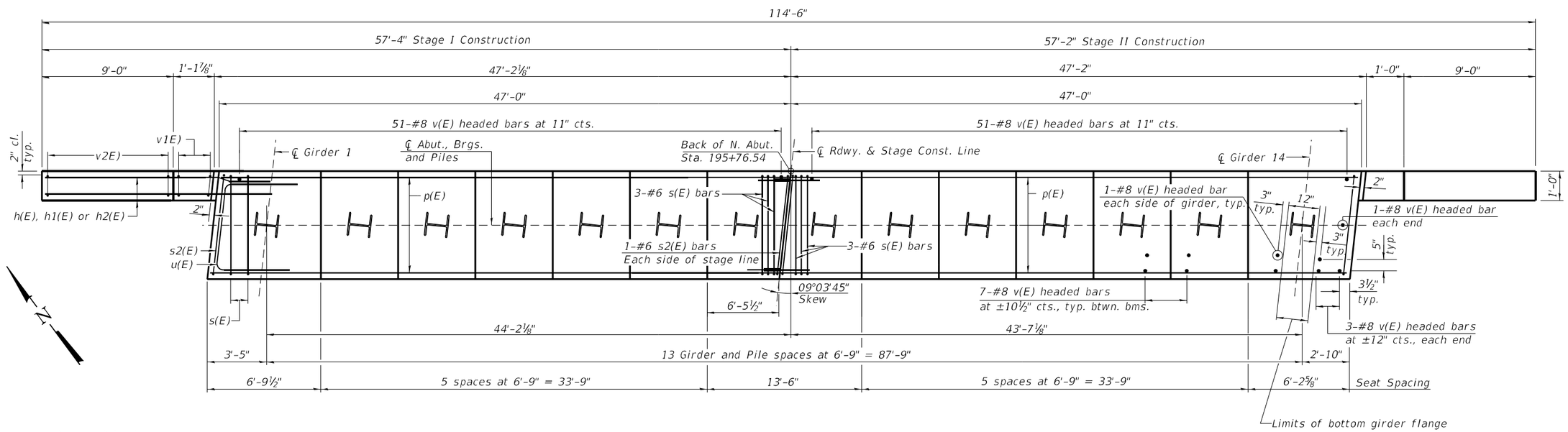

PLAN

PILE DATA

Type: HP 12 x 63 w/ pile shoes
Nominal Required Bearing: 497 kips
Factored Resistance Available: 273 kips
Est. Length: 31 ft
No. Production Piles: 14

Notes:
Pour steps monolithically with cap.
Space reinforcement in cap to miss anchor bolts.
See sheet 28 of 33 for details of piles.
See sheet 29 of 33 for details of Bar splicers.
See sheet 22 of 33 for details of Anchor bolt layout.
See sheet 2 of 33 for drainage details.
See sheet 25 of 33 for section thru abutment, field cutting diagram, bar details and Bill of Material.

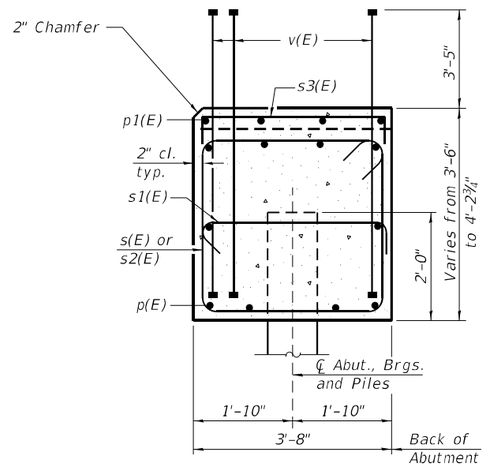

SEC. THRU ABUT.

Dimensions at right angles to abutment.

TWO ABUTMENTS
BILL OF MATERIAL

Bar	No.	Size	Length	Shape
h(E)	64	#7	14'-0"	
h1(E)	24	#7	21'-6"	
h2(E)	8	#5	10'-10"	
p(E)	40	#7	46'-8"	
p1(E)	16	#5	27'-0"	
s(E)	164	#6	14'-4"	
s1(E)	56	#5	4'-4"	
s2(E)	8	#6	14'-5"	
s3(E)	108	#5	8'-4"	
u(E)	16	#6	11'-11"	
v(E)	454	#8	6'-6"	
v1(E)	16	#5	8'-5"	
v2(E)	36	#5	11'-11"	
Structure Excavation		Cu. Yd.	524	
Concrete Structures		Cu. Yd.	113.2	
Reinforcement Bars, Epoxy Coated		Pound	20,900	
Furnishing Steel Piles HP 12x63		Foot	798	
Driving Piles		Foot	798	
Test Pile, Steel HP 12x63		Each	1	
Pile Shoes		Each	28	

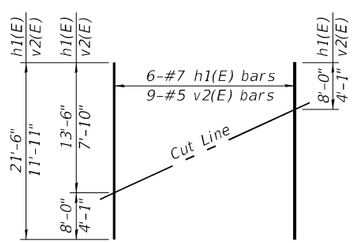

FIELD CUTTING DIAGRAM

Order h1(E) and v2(E) full length. Cut as shown and use remainder of bars in opposite wing.

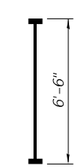

BAR v(E)

(Headed)

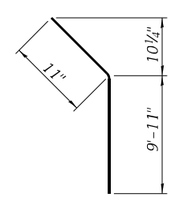

BAR h2(E)

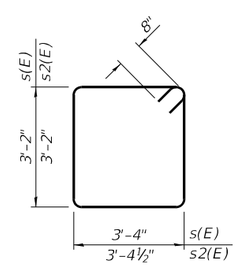

BAR s(E) & s2(E)

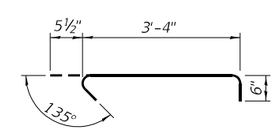

BAR s1(E)

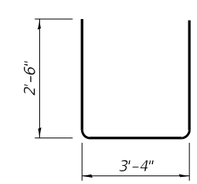

BAR s3(E)

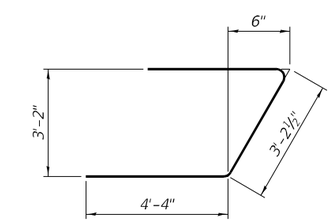

BAR u(E)

Note:
Headed bars shall conform to ASTM A970 with threaded attachment; Class HA; and reinforcement bars conforming to ASTM A706. Cost included with Reinforcement Bars, Epoxy Coated.

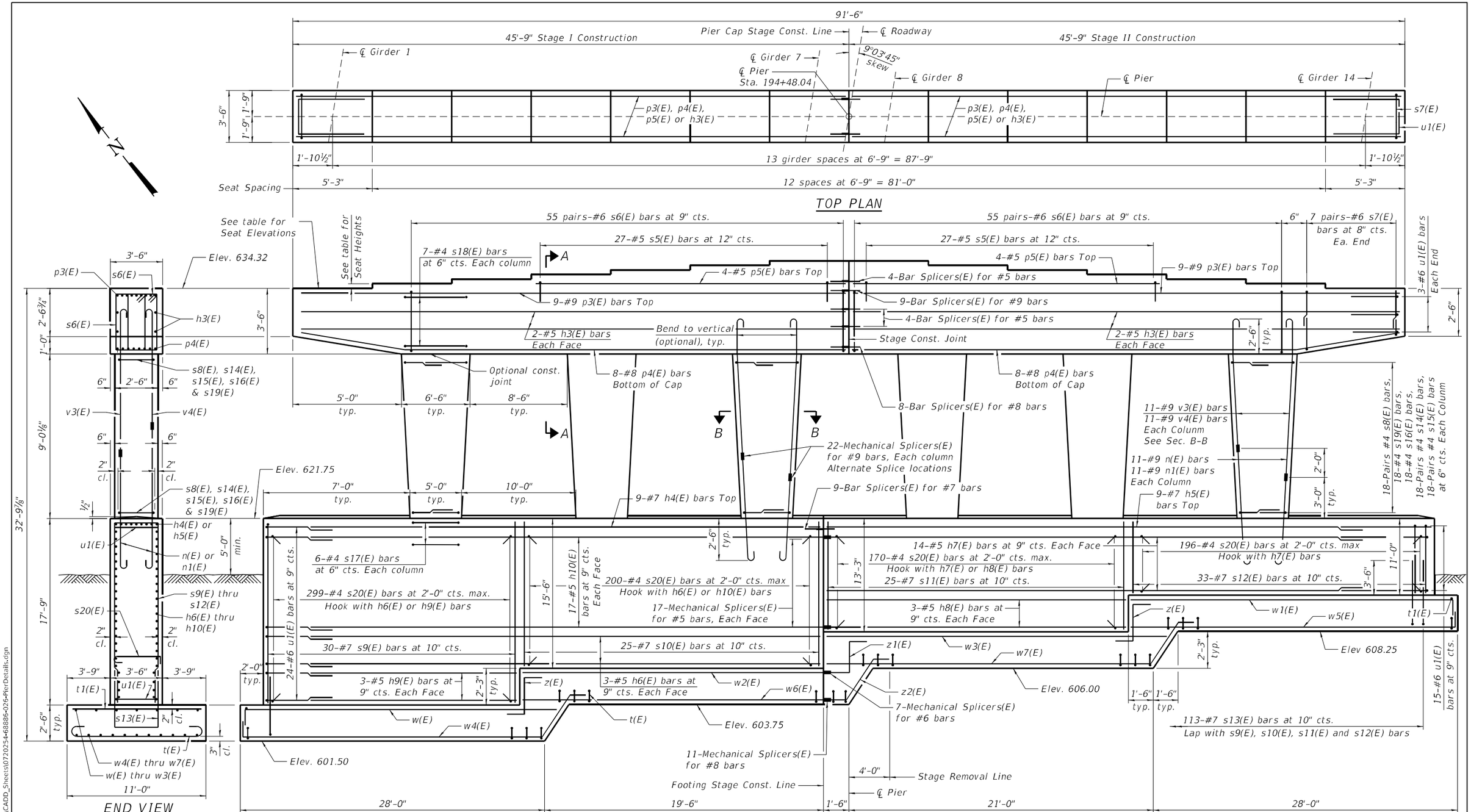

Notes:

Space reinforcement in cap to miss anchor bolts.

Pour steps monolithically with cap.

See sheet 27 of 33 for Sections A-A and B-B, Footing detail, bar bends, and Bill of Material.

See sheet 22 of 33 for Anchor Bolt Layout.

Proposed bottom of footing elevation is intended to match that of existing footing. Bottom of footing shall be 6" min. into rock.

The pier footing maximum applied service bearing pressure (Qmax) = 3.3 ton/ft^2.

SEAT ELEVATIONS AND STEP HEIGHTS

	Girder 1	Girder 2	Girder 3	Girder 4	Girder 5	Girder 6	Girder 7	Girder 8	Girder 9	Girder 10	Girder 11	Girder 12	Girder 13	Girder 14
Seat Elevations	634.31	634.45	634.57	634.70	634.80	634.90	634.99	634.99	634.88	634.78	634.67	634.53	634.39	634.26
Step heights	1½"	1½"	1½"	1¼"	1¼"	1⅛"	0	1⅜"	1¼"	1⅜"	1⅝"	1⅝"	1½"	

(Sheet 1 of 2)

MODEL: Default
FILE NAME: E:\2125-3\Final Design\Design Plans\CADD_Sheets\0720254-68886-026-PierDetails.dgn

LIN ENGINEERING, LTD. Consulting Engineers Springfield, Illinois	USER NAME =	DESIGNED - CZ	REVISED -	STATE OF ILLINOIS DEPARTMENT OF TRANSPORTATION	PIER DETAILS STRUCTURE NO. 072-0254	F.A.U. RTE. 6578	SECTION (72-3HB-4)BR
		CHECKED - CL	REVISED -			COUNTY PEORIA	TOTAL SHEETS 175
	PLOT SCALE =	DRAWN - AJF	REVISED -			SHEET NO. 111	CONTRACT NO. 68886
	PLOT DATE = 6/21/2023	CHECKED - MTH	REVISED -		SHEET 26 OF 33 SHEETS	ILLINOIS	FED. AID PROJECT

6/21/2023 10:37:54 AM

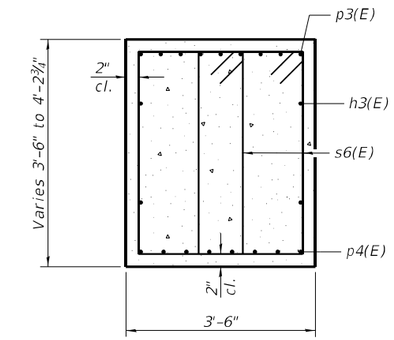

SECTION A-A

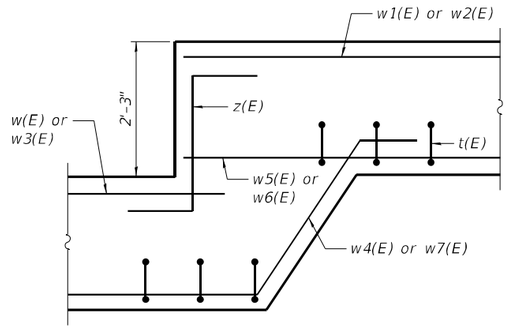

FOOTING STEP DETAIL

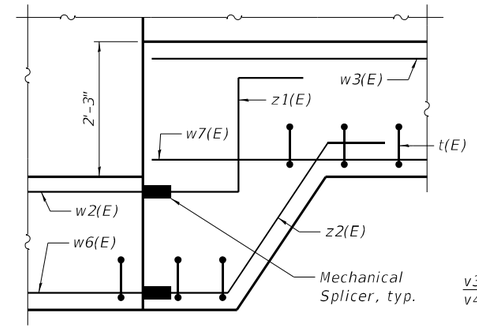

FOOTING STEP DETAIL AT STAGE CONST. LINE

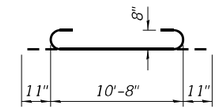

BAR t(E)

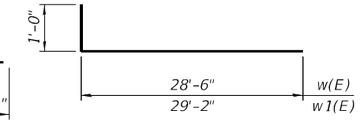

BARS w(E) & w1(E)

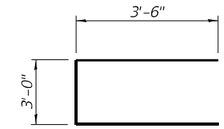

BAR u1(E)

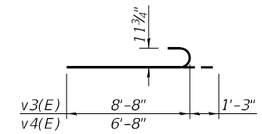

BARS v3(E) & v4(E)

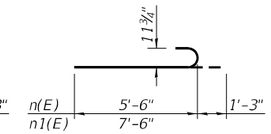

BARS n(E) & n1(E)

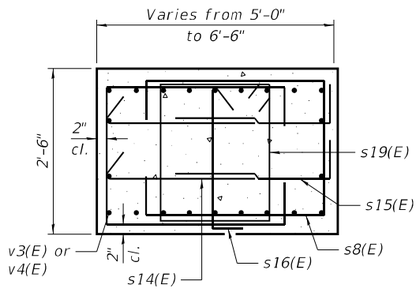

SECTION B-B

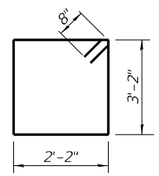

BAR s6(E)

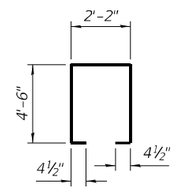

BAR s8(E)

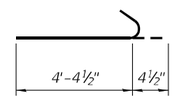

BAR s14(E)

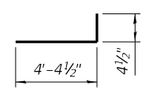

BAR s15(E)

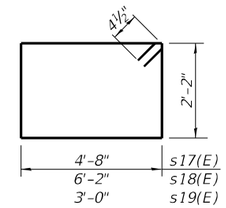

BARS s17(E), s18(E) & s19(E)

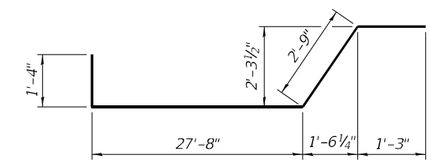

BAR w4(E)

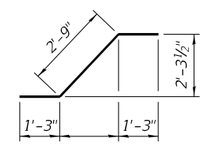

BAR z2(E)

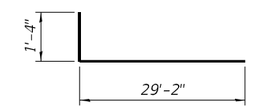

BAR w5(E)

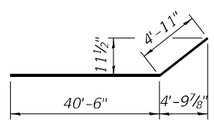

BAR p4(E)

Notes:

The Stage I pier footing and crash wall shall be backfilled as soon as possible after their construction. The Contractor shall provide temporary protective covering to the concrete surface and projecting reinforcement at the stage construction joint prior to backfilling. The temporary protective covering shall be removed after Stage II excavation and demolition of the existing bridge pier and footing have been completed, and prior to construction of the bonded stage construction joint. The Stage II pier footing and crash wall shall be backfilled as soon as possible after their construction. This work shall not be measured separately for payment but shall be included in the cost for Concrete Structures.

For Structure Excavation Limits, see sheet 4 of 33.

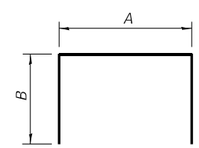

BARS s5(E), s7(E) & s9(E) THRU s13(E)

A & B DIMENSIONS

Bar	A	B
s5(E)	3'-2"	2'-6"
s7(E)	2'-2"	2'-2"
s9(E)	3'-2"	17'-4"
s10(E)	3'-2"	15'-1"
s11(E)	3'-2"	12'-10"
s12(E)	3'-2"	10'-7"
s13(E)	3'-2"	5'-6"

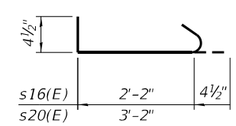

BARS s16(E) & s20(E)

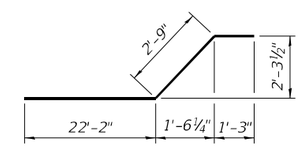

BAR w7(E)

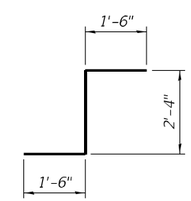

BAR z(E) & z1(E)

BILL OF MATERIAL

Bar	No.	Size	Length	Shape
h3(E)	8	#5	45'-5"	
h4(E)	9	#7	45'-2"	
h5(E)	9	#7	48'-2"	
h6(E)	6	#5	45'-2"	
h7(E)	28	#5	48'-2"	
h8(E)	6	#5	20'-8"	
h9(E)	6	#5	24'-2"	
h10(E)	34	#5	45'-6"	
n(E)	66	#9	6'-9"	
n1(E)	66	#9	8'-9"	
p3(E)	18	#9	45'-5"	
p4(E)	16	#8	45'-5"	
p5(E)	8	#5	26'-8"	
s5(E)	54	#5	8'-2"	
s6(E)	220	#6	12'-0"	
s7(E)	28	#6	6'-6"	
s8(E)	216	#4	11'-11"	
s9(E)	30	#7	37'-10"	
s10(E)	25	#7	33'-4"	
s11(E)	25	#7	28'-10"	
s12(E)	33	#7	24'-4"	
s13(E)	113	#7	14'-2"	
s14(E)	216	#4	4'-9"	
s15(E)	216	#4	4'-9"	
s16(E)	108	#4	2'-11"	
s17(E)	36	#4	14'-5"	
s18(E)	42	#4	17'-5"	
s19(E)	108	#4	11'-1"	
s20(E)	865	#4	3'-11"	
t(E)	99	#8	12'-6"	
t1(E)	99	#6	10'-8"	
u1(E)	45	#6	10'-0"	
v3(E)	66	#9	9'-11"	
v4(E)	66	#9	7'-11"	
w(E)	7	#6	29'-6"	
w1(E)	7	#6	30'-2"	
w2(E)	7	#6	21'-0"	
w3(E)	7	#6	23'-0"	
w4(E)	11	#8	33'-0"	
w5(E)	11	#8	30'-6"	
w6(E)	11	#8	21'-0"	
w7(E)	11	#8	26'-2"	
z(E)	14	#5	5'-4"	
z1(E)	7	#6	5'-4"	
z2(E)	11	#8	5'-3"	
Structure Excavation		Cu. Yd.	821	
Concrete Structures		Cu. Yd.	354.9	
Reinforcement Bars, Epoxy Coated		Pound	50,610	
Rock Excavation for Structures		Cu. Yd.	8	

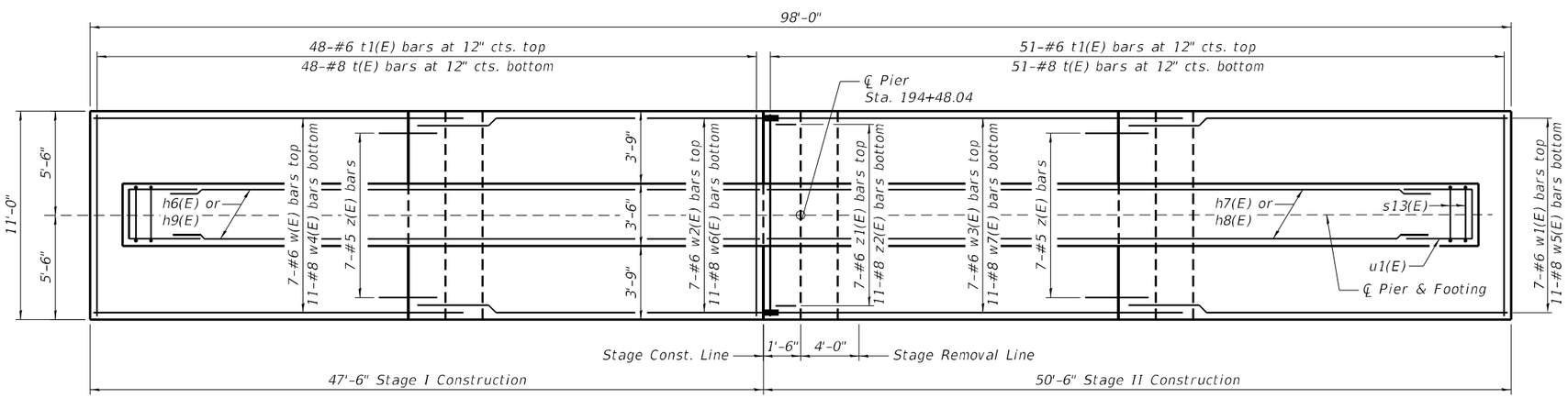

FOOTING PLAN

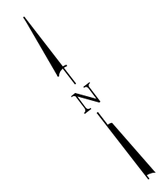

(Sheet 2 of 2)

LIN ENGINEERING, LTD.
Consulting Engineers
Springfield, Illinois

USER NAME =	DESIGNED - CZ	REVISED -	
	CHECKED - CL	REVISED -	
PLOT SCALE =	DRAWN - AJF	REVISED -	
PLOT DATE = 6/21/2023	CHECKED - MTH	REVISED -	

STATE OF ILLINOIS
DEPARTMENT OF TRANSPORTATION

PIER DETAILS
STRUCTURE NO. 072-0254

SHEET 27 OF 33 SHEETS

F.A.U. RTE.	SECTION	COUNTY	TOTAL SHEETS	SHEET NO.
6578	(72-3HB-4)BR	PEORIA	175	112

CONTRACT NO. 68886

ILLINOIS FED. AID PROJECT

MODEL: Default
FILE NAME: E:\2125-3\Final Design\Design Plans\CADD_Sheets\0720254-68886-027-PierDetails.dgn

6/21/2023 10:37:55 AM

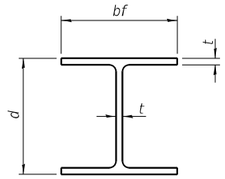

STEEL PILE TABLE

Designation	Depth d	Flange width bf	Web and Flange thickness t	Encasement diameter A
HP 14x117	14 1/4"	14 7/8"	13/16"	30"
x102	14"	14 3/4"	11/16"	30"
x89	13 7/8"	14 3/4"	5/8"	30"
x73	13 5/8"	14 5/8"	1/2"	30"
HP 12x84	12 1/4"	12 1/4"	11/16"	24"
x74	12 1/8"	12 1/4"	5/8"	24"
x63	12"	12 1/8"	1/2"	24"
x53	11 3/4"	12"	7/16"	24"
HP 10x57	10"	10 1/4"	9/16"	24"
x42	9 3/4"	10 1/8"	7/16"	24"
HP 8x36	8"	8 1/8"	7/16"	18"

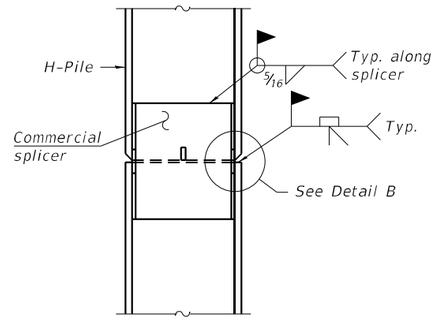

ELEVATION

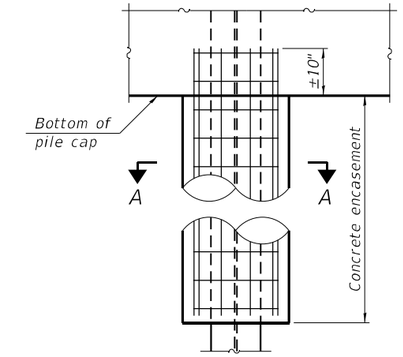

ELEVATION

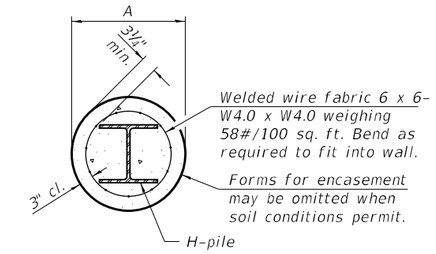

SECTION A-A

INDIVIDUAL PILE CONCRETE ENCASEMENT
(when specified)

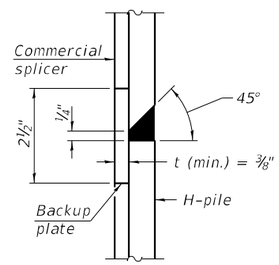

DETAIL "B"

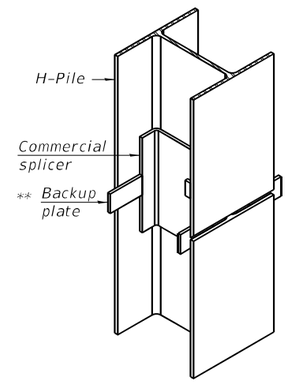

ISOMETRIC VIEW

WELDED COMMERCIAL SPLICE

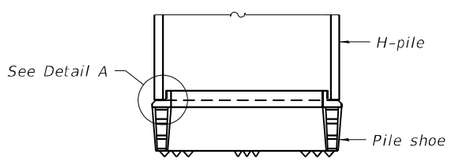

ELEVATION

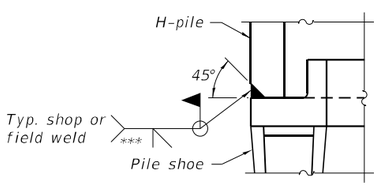

DETAIL A

SHOE ATTACHMENT

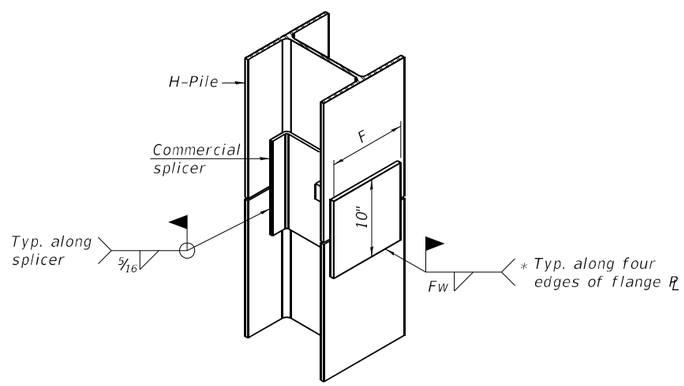

ISOMETRIC VIEW

WELDED COMMERCIAL SPLICE ALTERNATE

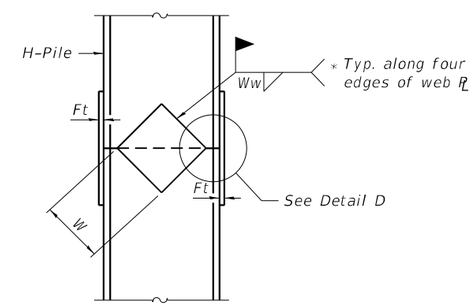

ELEVATION

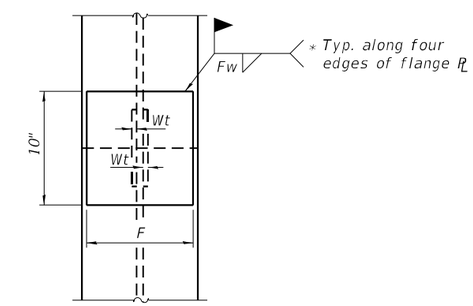

END VIEW

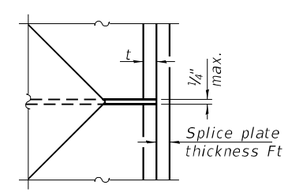

DETAIL D

Designation	F	Ft	Fw	W	Wt	Ww
HP 14x117	12 1/2"	1"	7/8"	7 3/4"	5/8"	1/2"
x102	12 1/2"	7/8"	3/4"	7 3/4"	5/8"	1/2"
x89	12 1/2"	3/4"	11/16"	7 3/4"	5/8"	1/2"
x73	12 1/2"	5/8"	9/16"	7 3/4"	5/8"	1/2"
HP 12x84	10"	7/8"	11/16"	6 1/2"	5/8"	1/2"
x74	10"	7/8"	11/16"	6 1/2"	5/8"	1/2"
x63	10"	5/8"	1/2"	6 1/2"	1/2"	3/8"
x53	10"	3/8"	1/2"	6 1/2"	1/2"	3/8"
HP 10x57	8"	3/4"	9/16"	5 1/4"	1/2"	3/8"
x42	8"	5/8"	9/16"	5 1/4"	1/2"	3/8"
HP 8x36	7"	5/8"	7/16"	4 1/4"	1/2"	3/8"

WELDED PLATE FIELD SPLICE

Note:
The steel H-piles shall be according to AASHTO M270 Grade 50.

* Interrupt welds 1/4" from end of web and/or each flange.

** Remove portions of backup plates that extend outside the flanges.

*** Weld size per pile shoe manufacturer (5/16" min.).

F-HP 2-1-2023

MODEL: Default
FILE NAME: E:\2125-3\Final Design\Design Plans\CADD_Sheets\0720254-68886-028-PileDetails.dgn

8/12/2023 10:44:17 AM

LIN ENGINEERING, LTD.
Consulting Engineers
Springfield, Illinois

USER NAME =	DESIGNED - CZ	REVISED -	
	CHECKED - CL	REVISED -	
PLOT SCALE =	DRAWN - AJF	REVISED -	
PLOT DATE = 8/12/2023	CHECKED - MTH	REVISED -	

STATE OF ILLINOIS
DEPARTMENT OF TRANSPORTATION

HP PILE DETAILS
STRUCTURE NO. 072-0254

SHEET 28 OF 33 SHEETS

F.A.U. RTE.	SECTION	COUNTY	TOTAL SHEETS	SHEET NO.
6578	(72-3HB-4)BR	PEORIA	175	113
		CONTRACT NO. 68886		
	ILLINOIS	FED. AID PROJECT		

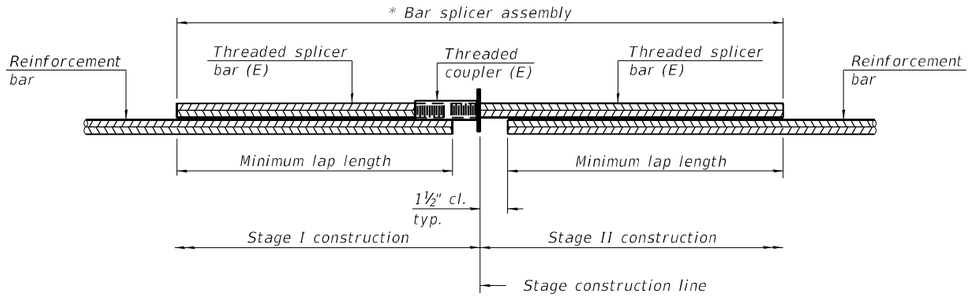

STANDARD BAR SPLICER ASSEMBLY PLAN

Only bar splicer assemblies as presented on the approved QPL list may be used.

Threaded splicer bar length = min. lap length + 1½" + thread length

* Epoxy not required on Bar Splicer Assembly components used in conjunction with black bars.

Location	Bar size	No. assemblies required	Minimum lap length
Deck Slab	#5	758	3'-6"
Deck Slab	#6	16	3'-7"
Approach Slab	#5	170	3'-4"
Approach Slab	#8	120	4'-9"
Abutments	#7	20	4'-8"
Pier	#5	8	3'-4"
Pier	#7	9	4'-8"
Pier	#8	8	5'-4"
Pier	#9	9	6'-7"

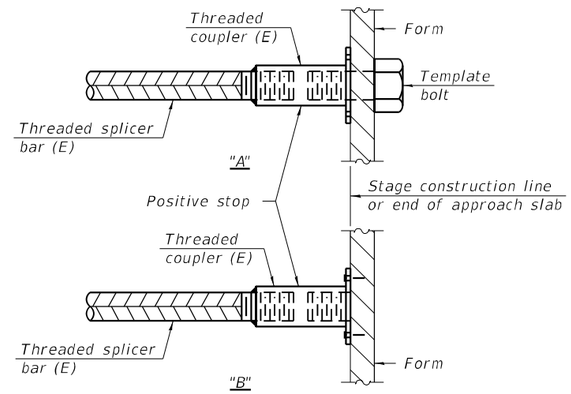

INSTALLATION AND SETTING METHODS

"A" : Set bar splicer assembly by means of a template bolt.
"B" : Set bar splicer assembly by nailing to wood forms or cementing to steel forms.
(E) : Indicates epoxy coating.

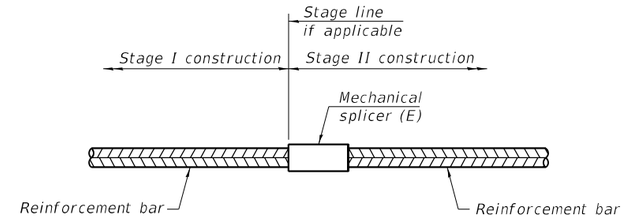

STANDARD MECHANICAL SPLICER

Location	Bar size	No. assemblies required
Pier	#5	34
Pier	#6	7
Pier	#8	11
Pier	#9	132

Notes:
Splicer bars shall be deformed with threaded ends and have a minimum 60 ksi yield strength.
All reinforcement shall be lapped and tied to the splicer bars.
Bar splicer assemblies shall be epoxy coated according to the requirements for reinforcement bars. See Section 508 of the Standard Specifications.
See approved list of bar splicer assemblies and mechanical splicers for alternatives.

BSD-1 2-1-2023

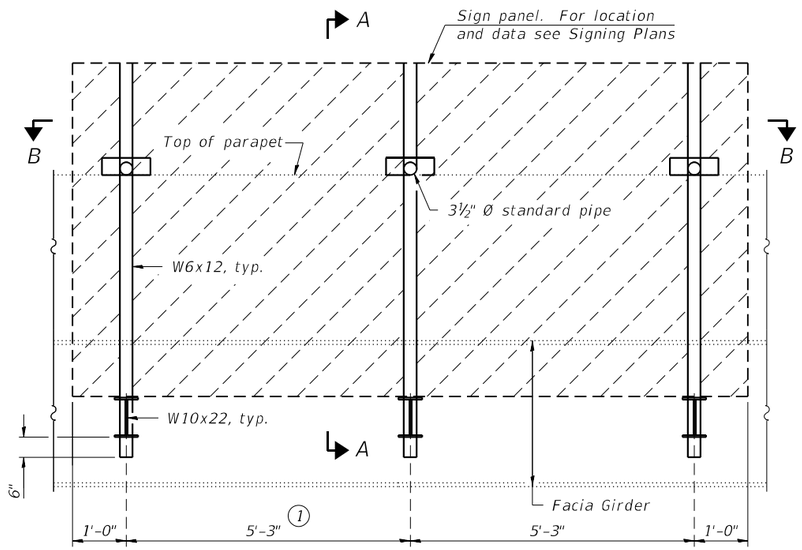

FRONT ELEVATION

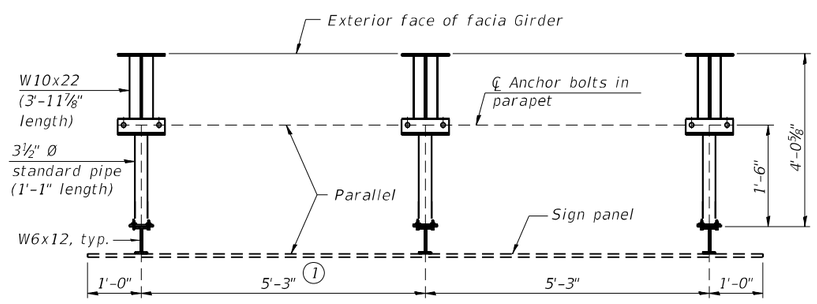

SECTION B-B

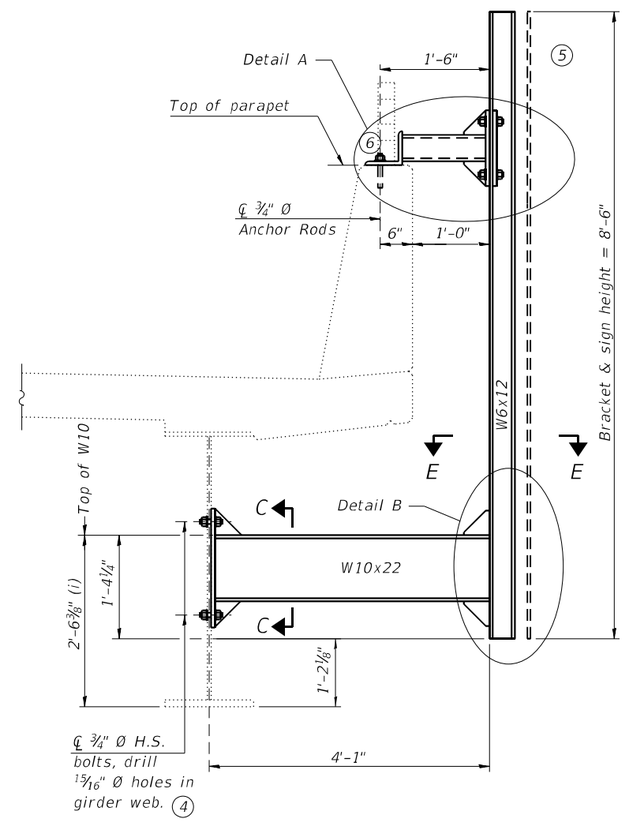

SECTION A-A

NOTES:

DESIGN: AASHTO Standard Specifications for Structural Supports for Highway Signs, Luminaires and Traffic Signals. ("AASHTO Specifications") 2

CONSTRUCTION: Current (at time of letting) Illinois Department of Transportation Standard Specifications for Road and Bridge Construction, Supplemental Specifications and Special Provisions. ("Standard Specifications")

LOADING: 90 M.P.H. WIND VELOCITY

MINIMUM CLEARANCE: 3" greater than bridge members at all locations. (All Obstructions)

WELDING: All welds to be continuous unless otherwise shown. All welding to be done in accordance with current AWS D1.1 Structural Welding Code (Steel) and the Standard Specificiations.

MATERIALS: All Structural Steel Pipe shall be ASTM A53 Grade B with a minimum yield of 35,000 p.s.i., or A500 Grade B or C with a minimum yield of 46,000 p.s.i. If A500 pipe is substituted for A53, then the outside diameter shall be as detailed and wall thickness greater than or equal to A53. All Structural Steel Plates and Shapes shall conform to AASHTO M270 Gr. 36, Gr. 50 (M183, M223 Gr. 50,).

HIGH STRENGTH BOLTS: All bolts, washers, nuts and locknuts shall satisfy the requirements of ASTM designation A307 unless noted as "H.S." which shall require AASHTO M164 (A325), ASTM A449, or approved alternate. All fasteners shall be hot dip galvanized per AASHTO M232 unless otherwise specified.

GALVANIZING: All Plates, Shapes and Pipe shall be Hot Dip Galvanized after fabrication in accordance with AASHTO M111. Painting is not permitted.

ANCHOR RODS: All-threaded rod shall conform to ASTM F1554 Grade 105, ¾" Ø x 12" long, each with one plate washer and locknut and be hot dip galvanized per AASHTO M232. They shall be either cast into the concrete or epoxy grouted in accordance with Section 584 of the Standard Specifications. Minimum embedment in concrete shall be 9".

Installations not within dimensional limits shown require special analysis for all components and must be submitted to the Bureau of Bridges and Structures for approval.

Contractor shall field check all pertinent bridge dimensions shown on plans before submitting shop drawings.

All holes in bridge girders should be located in the middle half of the member. There shall be no holes drilled in the lower quarter of the member's depth. Proposed exceptions must be approved by the Bureau of Bridges and Structures.

The Engineer may adjust dimension "i" to meet the above condition and to keep the sign level.

1. Bracket spacing ≤ 6'-0", max. Spacing shall be uniform if possible but may vary ±6" to miss obstruction (rail post, web stiffeners, splice plates, etc.).

2. Any design modifications shall be based on the current version of applicable specifications and submitted for the Engineer's approval.

3. Unit price includes brackets, supports, anchor bolts, fasteners, fabrication, delivery, erection, field drilling and other necessary items.

4. Holes in new steel members may be drilled in the fabrication shop or in the field.

5. Sign shall not extend more than 6" above top of bracket, and this dimension may vary to keep sign level if bridge is on grade or vertical curve.

6. For bridge mounted sign structures installed on new bridges with railing, during design, bracket spacing must be coordinated with railing post spacing and the Contractor must install upper brackets prior to railing installation.

For Details A & B, Sections C-C and E-E, see Sheet 31 of 33.

Structure Number	Sign Skew Angle	I-474 Station	No. of Brackets (Total)
072-0254	0°	284+15	3

TOTAL BILL OF MATERIAL

3 Overhead Sign Structure-Bridge Mounted	Foot	13

(Sheet 1 of 2)

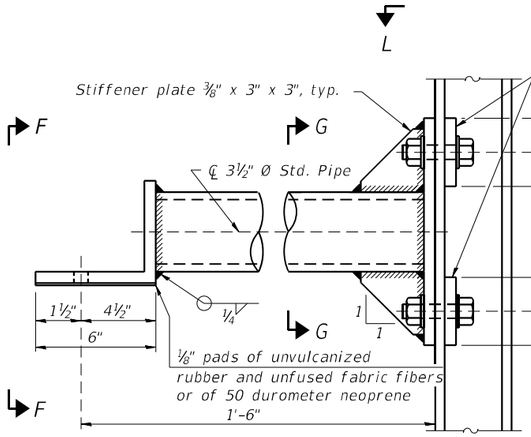

DETAIL A

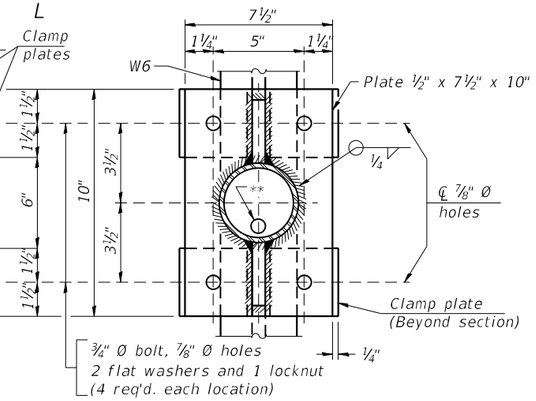

SECTION G-G

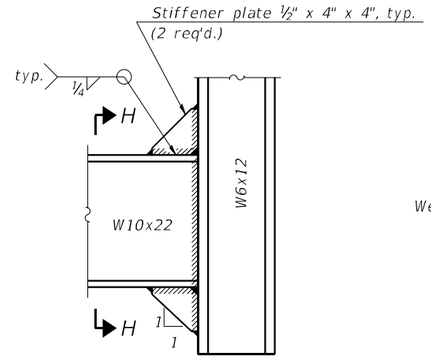

DETAIL B - WELDED CONNECTION

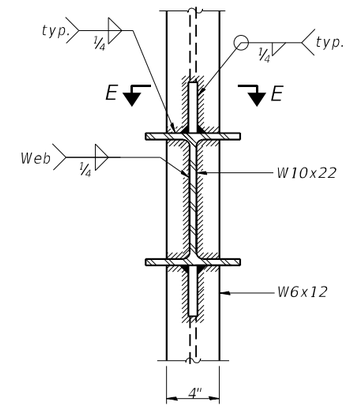

SECTION H-H

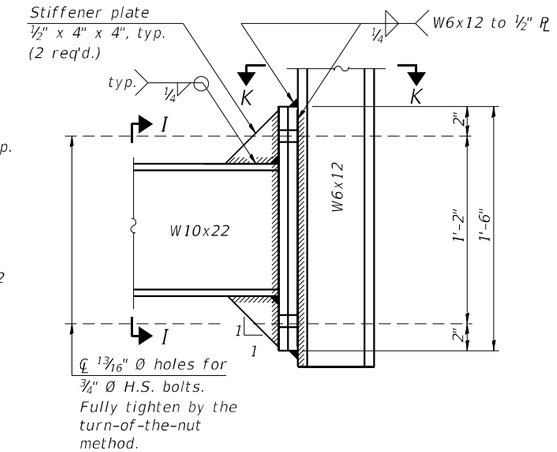

DETAIL B - ALTERNATE BOLTED CONNECTION

Alternate may be substituted by contractor to facilitate construction or galvanizing, especially on long struts for skewed bridges.

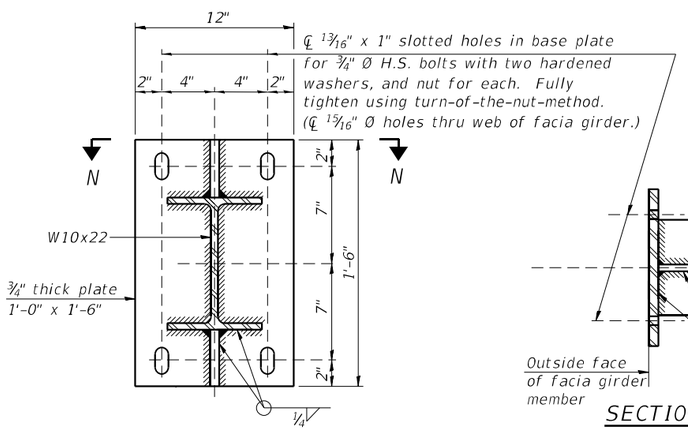

SECTION C-C

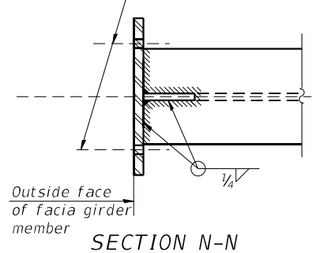

SECTION N-N

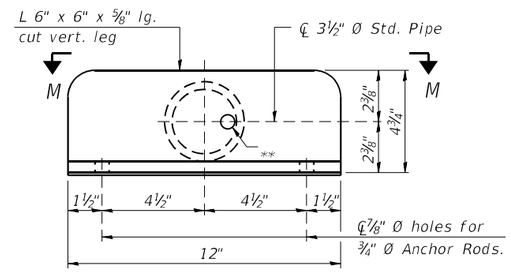

VIEW F-F

** 13/16" Ø holes for galvanizing. After galvanizing, install ⅞" Ø A307 hot-dip galvanized bolt to close hole in angle. (No bolt required in ½" plate.)

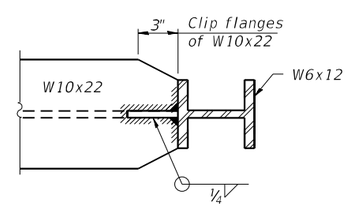

SECTION E-E

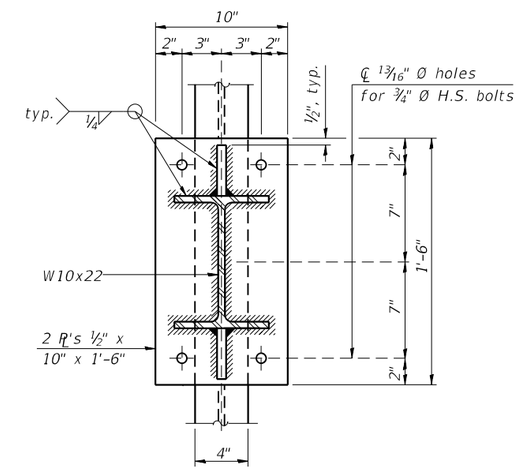

SECTION I-I

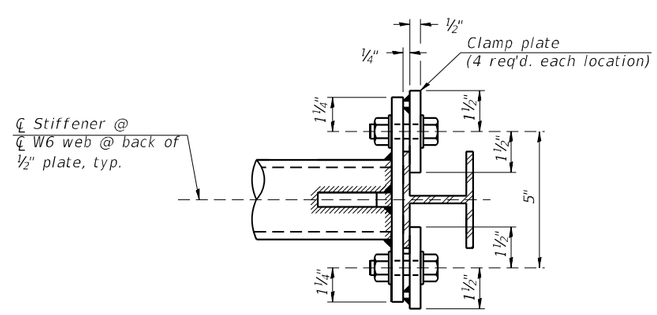

SECTION L-L

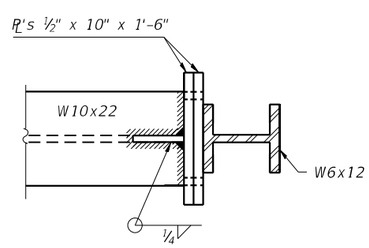

SECTION K-K

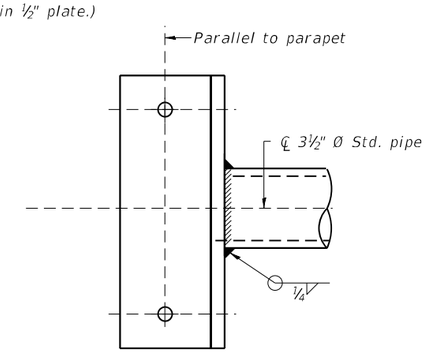

SECTION M-M

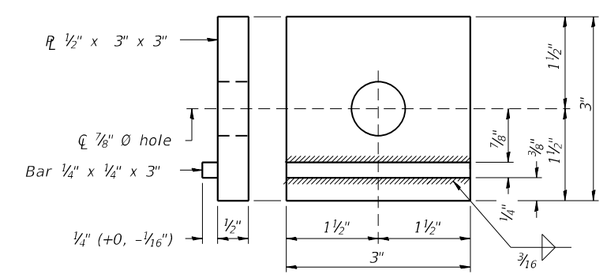

CLAMP PLATE DETAILS

(Sheet 2 of 2)

LIN ENGINEERING, LTD. Consulting Engineers Springfield, Illinois	USER NAME =	DESIGNED - CZ	REVISED -	STATE OF ILLINOIS DEPARTMENT OF TRANSPORTATION	BRIDGE MOUNTED SIGN STRUCTURE STRUCTURE NO. 072-0254	F.A.U. RTE.	SECTION	COUNTY	TOTAL SHEETS / SHEET NO.
		CHECKED - CL	REVISED -			6578	(72-3HB-4)BR	PEORIA	175 / 116
	PLOT SCALE =	DRAWN - AJF	REVISED -					CONTRACT NO. 68886	
	PLOT DATE = 6/21/2023	CHECKED - MTH	REVISED -		SHEET 31 OF 33 SHEETS		ILLINOIS	FED. AID PROJECT	

MODEL: Default
FILE NAME: EX2125-3(Final Design)\Design Plans\CADD_Sheets\0720254-68886-031-BridgeMountedSign.dgn
6/21/2023 10:37:57 AM

Illinois Department of Transportation
Division of Highways
Terracon

SOIL BORING LOG

Page 1 of 1

Date 7/8/20

ROUTE FAI 474 (I-474) DESCRIPTION Structure boring for bridge replacement LOGGED BY BT (Terracon)

SECTION 73-3HB-2 LOCATION Airport Road over I-474, SEC. 14, TWP. 8N, RNG. 7E, 4th PM,
Latitude 40d 40' 22" N, Longitude 89d 40' 12" W

COUNTY Peoria DRILLING METHOD Solid Stem/ Rotary HAMMER TYPE AUTO SPT Hammer

STRUCT. NO. 072-0126
Station 284+70.45

BORING NO. SB-1
Station 284+09
Offset 139.0 ft RT
Ground Surface Elev. 640.02 ft

Surface Water Elev. ft
Stream Bed Elev. ft

Groundwater Elev.:
First Encounter ft
Upon Completion ft
After Hrs. ft

Description	Elev.	DEPTH (ft)	BLOWS (/6")	UCS Qu (tsf)	MOIST (%)
FILL- ASPHALT FRAGMENTS, CRUSHED STONE, AND CLAY	639.02				
FILL- CLAY LOAM: grayish brown, with sand and gravel			4		
			4		17
			6		
	637.02				
CLAY LOAM: brown, moist, very stiff to soft, with traces of sand			3		
			3	2.2	21
		-5	3		
			3		
			3	0.7	22
			3		
- with silt seams 8.5 to 10 feet			1		
			3	0.3	19
	630.02	-10	3		
SILTY CLAY LOAM: brown, moist, soft to medium stiff, with silt seams			2		
			3	0.4	27
			3		
			2		
			3	0.2	27
		-15	3		
			2		
			2	0.5	28
			2		
			4		
			1	0.7	23
	620.02	-20	2		
CLAY LOAM: brown, moist, stiff to very stiff, with sand			1		
			2	1.2	21
			4		
			3		
			5	2.9	21
		-25	6		
			4		
			7	1.6	22
			15		
			10		
- with traces of coal fragments 28.5 to 31 feet			19	1.3	21
		-30	19		
	609.02				
SHALE: gray, moist, completely weathered, extremely weak, with traces of sand			24		
			50/3	1.6	18
	607.52				
SANDSTONE: light gray, moist, completely weathered, very weak					
			50/3		
					19
		-35			
			50/3		
					18
	602.52				
End of Boring					
		-40			

The Unconfined Compressive Strength (UCS) Failure Mode is indicated by (B-Bulge, S-Shear, P-Penetrometer)
The SPT (N value) is the sum of the last two blow values in each sampling zone (AASHTO T206)

BBS, form 137 (Rev. 8-99)

SOIL BORING WO 50 AIRPORT RD.GPJ IL_DOT.GDT 7/30/20

Illinois Department of Transportation
Division of Highways
Terracon

SOIL BORING LOG

Page 1 of 1

Date 7/7/20

ROUTE FAI 474 (I-474) DESCRIPTION Structure boring for bridge replacement LOGGED BY BT (Terracon)

SECTION 73-3HB-2 LOCATION Airport Road over I-474, SEC. 14, TWP. 8N, RNG. 7E, 4th PM,
Latitude 40d 40' 24" N, Longitude 89d 40' 9" W

COUNTY Peoria DRILLING METHOD Solid Stem/ Rotary HAMMER TYPE AUTO SPT Hammer

STRUCT. NO. 072-0126
Station 284+70.45

BORING NO. SB-2
Station 284+56
Offset 160.0 ft LT
Ground Surface Elev. 638.63 ft

Surface Water Elev. ft
Stream Bed Elev. ft

Groundwater Elev.:
First Encounter ft
Upon Completion ft
After Hrs. ft

Description	Elev.	DEPTH (ft)	BLOWS (/6")	UCS Qu (tsf)	MOIST (%)
FILL- CLAY LOAM: grayish brown, with sand and gravel	637.63				
CLAY LOAM: dark brown, moist, stiff, with traces of sand			4		
			5		15
			8		
- brown at 3.5 feet			4		
			4	1.3	17
		-5	5		
			3		
			4	1.8	25
			8		
			3		
			3	1.4	19
	628.63	-10	4		
SILTY CLAY LOAM: brown, moist, stiff to medium stiff, with silt seams			3		
			5	1.4	21
			7		
			3		
			3		22
		-15	2		
			2		
			2		25
			3		
			2		
			2		26
		-20	2		
SILTY CLAY LOAM: brown, moist, stiff to medium stiff, with silt seams *(continued)*			1		
			2		26
			3		
			3		
			3	0.6	25
	613.63	-25	3		
CLAY LOAM: brown, moist, medium stiff to very stiff, with sand			2		
			2	0.8	21
			3		
			5		
			7	2.6	23
		-30	8		
	605.63				
SANDY CLAY LOAM: brown, moist, stiff, with sand and traces of shale fragments			88		
			50/1		20
		-35			
	602.63				
SANDSTONE: light gray, moist, completely weathered, very weak			100/5		
					20
			100/4		
					18
	598.63	-40			
End of Boring					

The Unconfined Compressive Strength (UCS) Failure Mode is indicated by (B-Bulge, S-Shear, P-Penetrometer)
The SPT (N value) is the sum of the last two blow values in each sampling zone (AASHTO T206)

BBS, form 137 (Rev. 8-99)

SOIL BORING WO 50 AIRPORT RD.GPJ IL_DOT.GDT 7/30/20

(Sheet 1 of 2)

MODEL: Default
FILE NAME: E:\2125-3\Final Design\Design Plans\CADD_Sheets\0720254-68886-032-SoilBorings.dgn

LIN ENGINEERING, LTD. Consulting Engineers Springfield, Illinois	USER NAME =	DESIGNED - CZ	REVISED -
		CHECKED - CL	REVISED -
	PLOT SCALE =	DRAWN - AGJ	REVISED -
	PLOT DATE = 6/21/2023	CHECKED - MTH	REVISED -

STATE OF ILLINOIS
DEPARTMENT OF TRANSPORTATION

SOIL BORING DATA
STRUCTURE NO. 072-0254

SHEET 32 OF 33 SHEETS

F.A.U. RTE.	SECTION	COUNTY	TOTAL SHEETS	SHEET NO.
6578	(72-3HB-4)BR	PEORIA	175	117
		CONTRACT NO. 68886		
	ILLINOIS	FED. AID PROJECT		

6/21/2023 10:37:57 AM

Illinois Department of Transportation
Division of Highways
Terracon

SOIL BORING LOG

Page 1 of 1

Date 7/9/20

ROUTE FAI 474 (I-474) DESCRIPTION Structure boring for bridge replacement LOGGED BY BT (Terracon)

SECTION 73-3HB-2 LOCATION Airport Road over I-474, SEC. 14, TWP. 8N, RNG. 7E, 4th PM, Latitude 40d 40' 23" N, Longitude 89d 40' 11" W

COUNTY Peoria DRILLING METHOD Solid Stem/ Rotary HAMMER TYPE AUTO SPT Hammer

STRUCT. NO. 072-0126
Station 284+70.45

BORING NO. SB-4
Station 284+15
Offset 16.0 ft LT
Ground Surface Elev. 617.68 ft

Surface Water Elev. ft
Stream Bed Elev. ft

Groundwater Elev.:
First Encounter 600.2 ft ▼
Upon Completion ft
After Hrs. ft

Description	Elev.	DEPTH (ft)	BLOWS (/6")	UCS Qu (tsf)	MOIST (%)
CLAY LOAM: brown, moist, very stiff			10		
			10 12		12
			4		
		-5	4 7	2.2	22
			3		
			4 8	1.9	26
			8		
	607.68	-10	13 25	3.3	22
SANDY LOAM: brown, moist, very dense			50/1		
					17
			50/5		
		-15			14
			50/2		
					13
			50/2		
	597.68	-20			14

Description	Elev.	DEPTH (ft)	BLOWS (/6")	UCS Qu (tsf)	MOIST (%)
SANDSTONE: light gray, moist, completely weathered, weak			50/2		
					15
			50/2		
		-25			19
			50/1		
	590.18				21
End of Boring					
Note: Rock cores were planned but not attempted due to poor cementation of materials.		-30			
		-35			
		-40			

The Unconfined Compressive Strength (UCS) Failure Mode is indicated by (B-Bulge, S-Shear, P-Penetrometer)
The SPT (N value) is the sum of the last two blow values in each sampling zone (AASHTO T206)

BBS, form 137 (Rev. 8-99)

SOIL BORING WO 50 AIRPORT RD.GPJ IL_DOT.GDT 7/30/20

Illinois Department of Transportation
Division of Highways
Terracon

SOIL BORING LOG

Page 1 of 1

Date 7/8/20

ROUTE FAI 474 (I-474) DESCRIPTION Structure boring for bridge replacement LOGGED BY BT (Terracon)

SECTION 73-3HB-2 LOCATION Airport Road over I-474, SEC. 14, TWP. 8N, RNG. 7E, 4th PM, Latitude 40d 40' 23" N, Longitude 89d 40' 9" W

COUNTY Peoria DRILLING METHOD Solid Stem/ Rotary HAMMER TYPE AUTO SPT Hammer

STRUCT. NO. 072-0126
Station 284+70.45

BORING NO. SB-3
Station 285+40
Offset 78.0 ft LT
Ground Surface Elev. 616.62 ft

Surface Water Elev. ft
Stream Bed Elev. ft

Groundwater Elev.:
First Encounter ft
Upon Completion ft
After Hrs. ft

Description	Elev.	DEPTH (ft)	BLOWS (/6")	UCS Qu (tsf)	MOIST (%)
FILL- CLAY LOAM: grayish brown, with sand and gravel	615.12		4		
CLAY LOAM: dark brown, moist, medium stiff to very stiff, with traces of sand			2 2		20
- brown at 3.5 feet			2		
		-5	4 8	2.2	22
	610.62		24		
SANDY LOAM: brown, moist, very dense			74/6		13
			50		
		-10	50/2		13
			50/3		
					12
			50/3		
		-15			13
	600.62		50/3		
SANDY LOAM: brown, moist, very dense, with sandstone fragments					13
	598.12		50/2		
SHALE: gray, with sand		-20			14

Description	Elev.	DEPTH (ft)	BLOWS (/6")	UCS Qu (tsf)	MOIST (%)
SHALE: gray, with sand (continued)	595.62		50/2		
SANDY LOAM: brown and gray, moist, very dense, with shale	594.12				13
End of Boring					
Note: Rock cores were planned but not attempted due to poor cementation of materials.		-25			
		-30			
		-35			
		-40			

The Unconfined Compressive Strength (UCS) Failure Mode is indicated by (B-Bulge, S-Shear, P-Penetrometer)
The SPT (N value) is the sum of the last two blow values in each sampling zone (AASHTO T206)

BBS, form 137 (Rev. 8-99)

SOIL BORING WO 50 AIRPORT RD.GPJ IL_DOT.GDT 7/30/20

(Sheet 2 of 2)

LIN ENGINEERING, LTD. Consulting Engineers Springfield, Illinois	USER NAME =	DESIGNED - CZ	REVISED -
		CHECKED - CL	REVISED -
	PLOT SCALE =	DRAWN - AGJ	REVISED -
	PLOT DATE = 6/21/2023	CHECKED - MTH	REVISED -

STATE OF ILLINOIS
DEPARTMENT OF TRANSPORTATION

SOIL BORING DATA
STRUCTURE NO. 072-0254
SHEET 33 OF 33 SHEETS

F.A.U. RTE.	SECTION	COUNTY	TOTAL SHEETS	SHEET NO.
6578	(72-3HB-4)BR	PEORIA	175	118
		CONTRACT NO. 68886		
	ILLINOIS	FED. AID PROJECT		

MODEL: Default
FILE NAME: E:\2125-3\Final Design\Design Plans\CADD_Sheets\0720254-68886-033-SoilBorings.dgn
6/21/2023 10:38:00 AM

FOR INFORMATION ONLY

ROUTE NO.	SECTION	COUNTY	TOTAL SHEETS	SHEET NO.
F.A.I.-474	72-3HB-4	PEORIA	27	8
FED. ROAD DIV. NO. 7		ILLINOIS	PROJECT I-474-7(36)192	

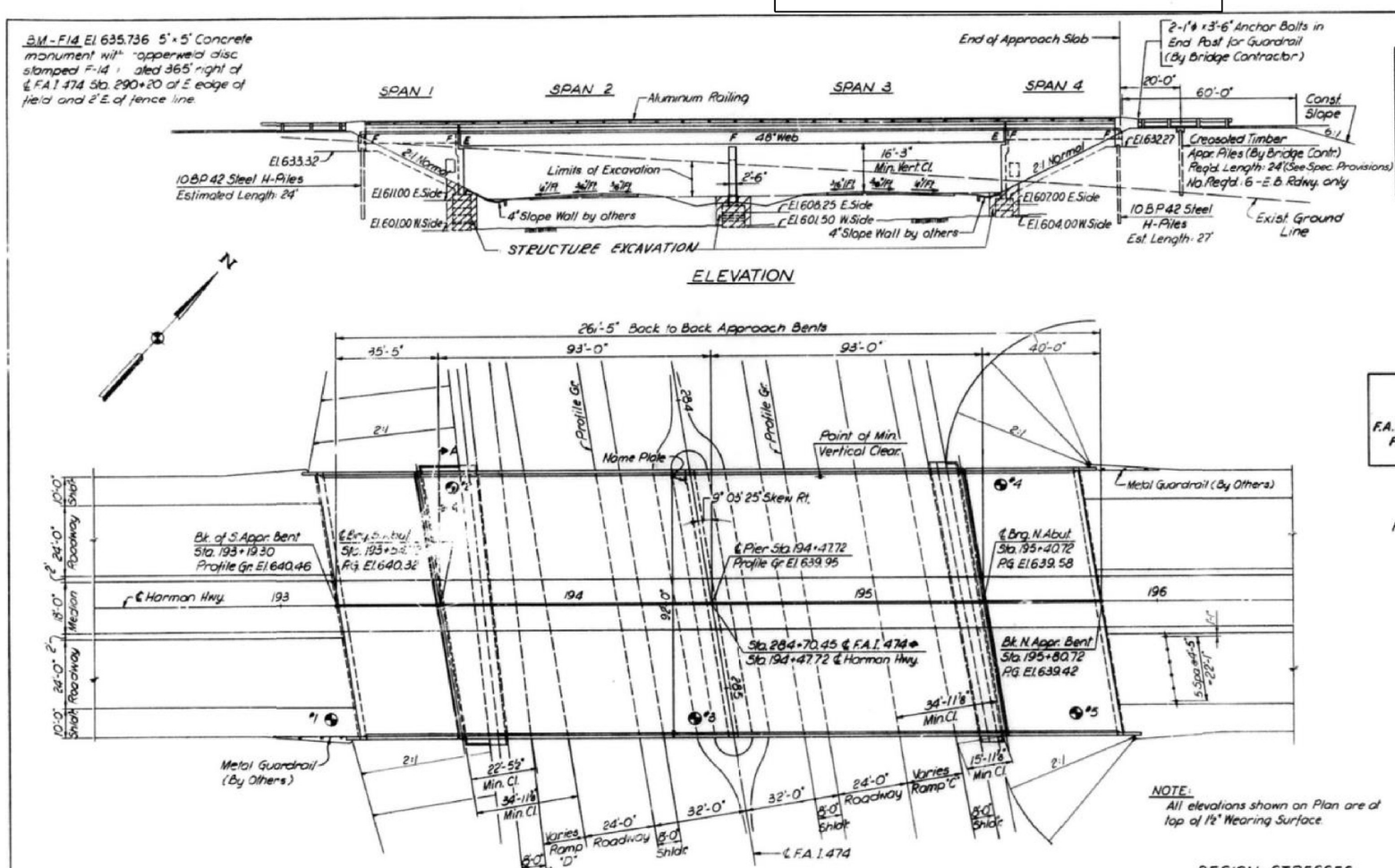

STATION 284+70.45
BUILT 197 BY
STATE OF ILLINOIS
F.A.I. RT. 474 SEC. 72-3HB-4
F.A. PROJ. I-474-7(36)
LOADING HS20

NAME PLATE

See Std. 2113
For location see Sh. 15

GENERAL NOTES

All reinforcement bars shall be lapped 24 diameters unless otherwise shown.

Fasteners shall be high strength bolts. Bolts 3/4 ϕ; open holes 13/16 ϕ, unless otherwise noted.

Calculated weight of Structural Steel = 507,420 Lbs.

The basic lead silico chromate paint system shall be used for shop and field painting of Structural Steel.

Field welding of construction accessories will not be permitted to the bottom flange of girders nor to the top flange for a distance equal to one-fourth the span length each way from the pier supports. Field welding in other areas will be permitted only when approved by the Engineer.

Anchor bolts shall be set before bolting diaphragms over supports.

Slope wall shall be reinforced with welded wire fabric 6" x 6" mesh, weighing 58# per 100 sq. ft.

The Contractor shall drive one (1) Steel test piles in a permanent location at the South and North Approach Bents as directed by the Engineer before ordering the remainder of piles.

An alternate strand pattern using Extra High Strength Prestressing strand (270 K.S.I.) is permitted.

The embankment configuration shown shall be the minimum embankment that must be constructed prior to construction of the abutments.

The concrete rail section above the mandatory construction joint at the top of the slab shall be constructed of Class X Concrete, except the aggregates shall conform to the requirements of Handrail Concrete.

Protective Coat shall not be applied to surfaces to which Coal Tar Interlayer Protective Coat is applied.

NOTE:
All elevations shown on Plan are at top of 1½" Wearing Surface.

TOTAL BILL OF MATERIAL

Item	Unit	Superstr.	Substr.	Total
Bituminous Concrete Surface Course, Class I	Ton	172	—	172
Structure Excavation	Cu. Yd.	—	1,660	1,660
Protective Coat	Sq. Yd.	743	14	757
Class X Concrete	Cu. Yd.	798.3	800.3	1,598.6
F. & E. P.P. Concrete I-Beams 36"	Lin. Ft.	713	—	713
F. & E. Structural Steel	Lump Sum	1	—	1
Stud Shear Connectors	Each	4,032	—	4,032
Aluminum Railing	Lin. Ft.	513	—	513
Reinforcement Bars	Lb.	196,430	81,080	277,510
Creosoted Piles 20.1 to 38 Ft.	Lin. Ft.	—	144	144
Steel Piles 10 BP 42	Lin. Ft.	—	663	663
Test Pile Steel	Each	—	2	2
Name Plate	Each	—	1	1
Coal Tar Interlayer Protective Coat	Sq. Yd.	2,037	—	2,037
Preformed Joint Sealer	Lin. Ft.	188	—	188
* Rock Excavation for Structures	Cu. Yd.	—	58	58

* ESTIMATED QUANTITY

DESIGN STRESSES

fc = 1,200 psi	Deck Slab
fc = 1,400 psi	Substructure, Curb & Parapet
n = 10	
fs = 20,000 psi	Structural Steel (A-36)
fs = 20,000 psi	Reinforcement
v = 75 psi	Footings

L.L. Deflection: $\frac{L}{1,440}$

Precast Prestressed Concrete Beams
fc = 5,000 psi
f'ci = 4,000 psi
f's = 248,000 psi (Strands)
fsi = 173,600 psi (Strands)

LOADING
HS 20-44
25#/□' Future Wearing Surface

SPECIFICATIONS
1969 AASHO as applicable

PROFILE GRADE F.A.I. 474
(At median edge)

PROFILE GRADE HARMAN HWY.
Top of 1½" Wearing Surface

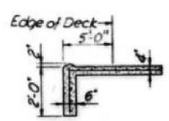

SECTION A-A

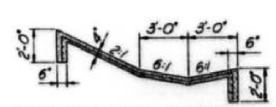

SECTION THRU SLOPEWALL

DESIGNED BY A.T.
DRAWN BY E.F.
CHECKED BY T.T.

STATE OF ILLINOIS
DIVISION OF HIGHWAYS
GENERAL PLAN
HARMAN HIGHWAY (F.A.S. RT. 389)
OVER
F.A.I. ROUTE 474
STA. 284+70.45
F.A.I. RT. 474 PEORIA COUNTY SECTION 72-3HB-4
CHRISTIAN-ROGE AND ASSOC. ENGINEERS
CHICAGO, ILLINOIS
SHEET 1 OF 17

FOR INFORMATION ONLY

ROUTE NO.	SECTION	COUNTY	TOTAL SHEETS	SHEET NO.
F.A.I.-474	72-3HB-4	PEORIA	27	9
FED. ROAD DIV. NO. 7	ILLINOIS	PROJECT		

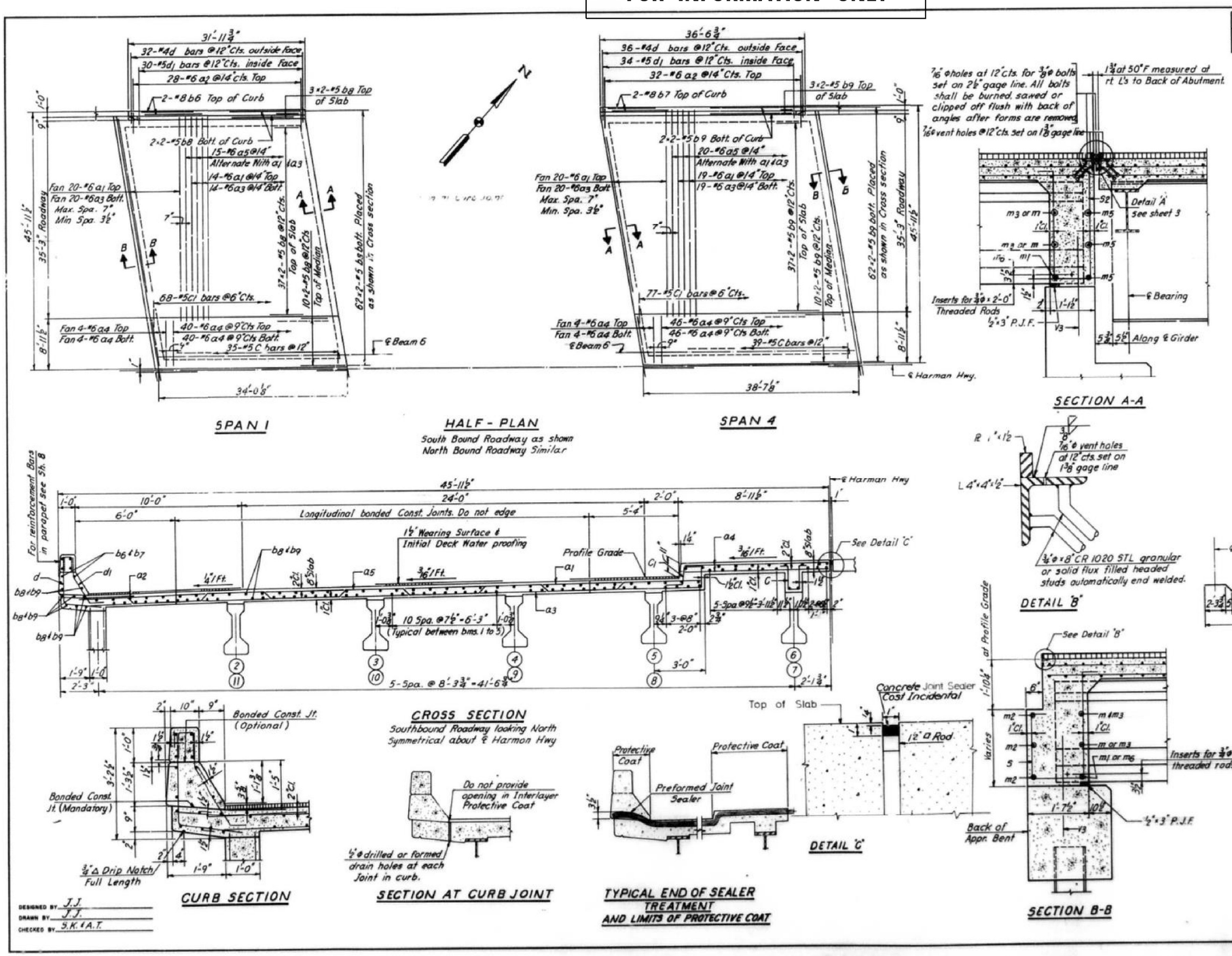

BILL OF MATERIAL *

Bar	No. Span 1	No. Span 4	Size	Length	Shape
a1	108	118	#6	37'-0"	
a2	56	64	#6	4'-0"	
a3	108	118	#6	38'-3"	
a4	192	216	#6	8'-7"	
a5	30	40	#6	38'-1"	
b6	4	—	#8	31'-8"	
b7	—	4	#8	36'-3"	
b8	456	—	#5	17'-7"	
b9	—	456	#5	19'-10"	
C	70	78	#5	4'-1"	
C1	136	154	#5	3'-8"	
d	64	72	#4	4'-7"	
d1	60	68	#5	3'-8"	
m	60	60	#4	7'-6"	
m1	20	20	#5	6'-9"	
m2	9	9	#5	31'-2"	
m3	4	4	#4	3'-7"	
m4	20	20	#4	6'-7"	
m5	9	9	#5	30'-0"	
m6	2	2	#5	2'-7"	
s	60	60	#4	7'-5"	
s1	4	4	#4	8'-6"	
s2	60	60	#4	8'-6"	
s3	4	4	#4	10'-8"	
s15	60	60	#4	7'-0"	
Reinforcement Bars				Lbs.	60870
Class 'X' Concrete				Cu. Yds.	281.3
Protective Coat				Sq. Yds.	207
Coal Tar Interlayer Prot. Coat				Sq. Yds.	568
Bit. Concr. Surface (Course Class I)				Ton	48

* Quantities shown above for both Roadways

Note:
For Deck Surfacing Detail see Sheet 3
For Bar Details see Sheet 3 & 4
For Placement of bars m thru m6 & s thru s3 & s15 see Sheet 4

STATE OF ILLINOIS
DIVISION OF HIGHWAYS
SUPERSTRUCTURE SPANS 1 & 4
HARMAN HIGHWAY (F.A.S. RT. 389)
OVER
F.A.I. ROUTE 474
STA. 284+70.45
F.A.I. RT. 474 PEORIA COUNTY SECTION 72-3HB-4
CHRISTIAN-ROSE AND ASSOC. ENGINEERS
CHICAGO, ILLINOIS
SHEET 2 OF 17

DESIGNED BY J.J.
DRAWN BY J.J.
CHECKED BY S.K. & A.T.

MODEL: Default
FILE NAME: P:\Civil_IDOT DIST4\PTB 194-035 var PH I-II 3120032\WO 10 Airport Road Phase 2 3120032-10\CAD Sheets\0468868-sht-exbridgeplans.dgn

The Upchurch Group
architects engineers surveyors
Professional Design Firm Corporation License No. 184-003401
123 North 15th Street Mattoon, IL 61938
Phone: 217.235.3177
e-mail: upchurchgroup@upchurchgroup.com

USER NAME = Sta42	DESIGNED - MJS	REVISED -	
TUG PROJECT NO. 3120032-10	DRAWN -	REVISED -	
PLOT SCALE = 100.0000 ' / in.	CHECKED - MJS	REVISED -	
PLOT DATE = 6/20/2023	DATE -	REVISED -	

STATE OF ILLINOIS
DEPARTMENT OF TRANSPORTATION

EXISTING STRUCTURE PLANS
AIRPORT ROAD OVER I-474

SCALE: 100.0000 ' / in. SHEET OF SHEETS STA. TO STA.

F.A.I. RTE.	SECTION	COUNTY	TOTAL SHEETS	SHEET NO.
474	(72-3HB-4)BR	PEORIA	175	120
		CONTRACT NO. 68886		
		ILLINOIS FED. AID PROJECT		

FOR INFORMATION ONLY

ROUTE NO.	SECTION	COUNTY	TOTAL SHEETS	SHEET NO.
F.A.I.-474	72-3HB-4	PEORIA	27	10
FED. ROAD DIV. NO. 7	ILLINOIS	PROJECT		

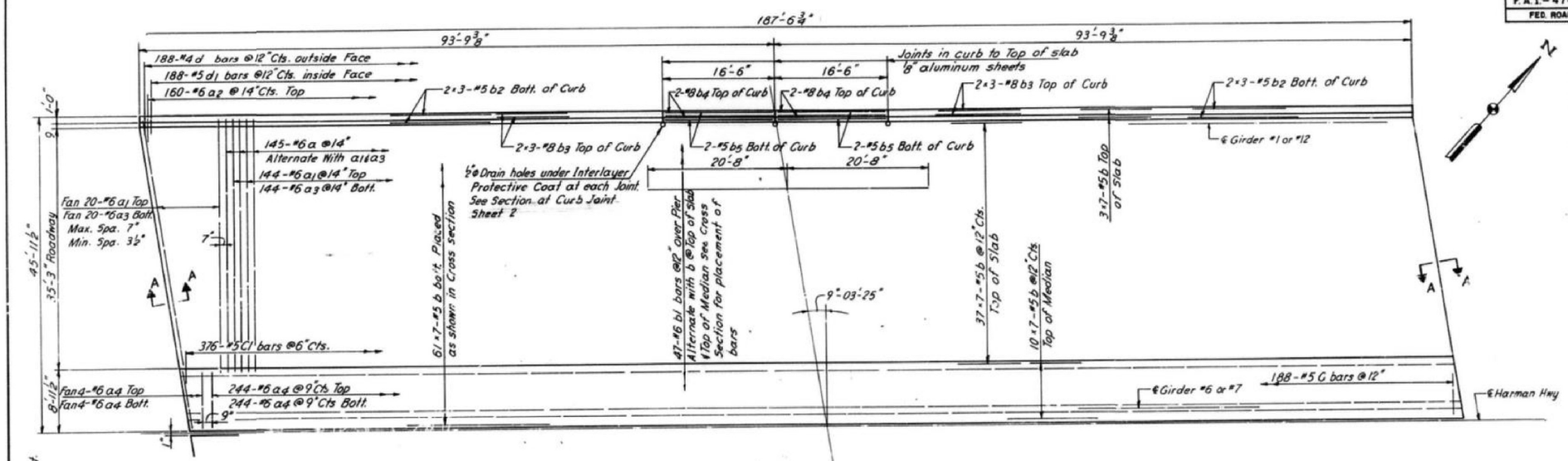

BILL OF MATERIAL *

Bar	No.	Size	Length	Shape
a	290	#6	38'-3"	
a1	368	#6	37'-0"	
a2	320	#6	4'-0"	
a3	368	#6	38'-3"	
a4	1,008	#6	8'-7"	
b	1554	#5	27'-10"	
b1	92	#6	41'-4"	
b2	24	#5	26'-8"	
b3	24	#8	27'-0"	
b4	8	#8	16'-3"	
b5	8	#5	16'-3	
c	376	#5	4'-1"	
c1	752	#5	3'-8"	
d	376	#4	4'-7"	
d1	376	#5	3'-8"	
Reinforcement Bars			Lbs.	134,060
Class X Concrete			Cu. Yds.	501.8
Preformed Joint Sealer			Lin. ft.	188
Coal Tar Interlayer Prot. Coat			Sq. Yds.	1,469
Structural Steel			Lbs.	507,420
Stud Shear Connector			Ea.	4032
Bit. Concr. Surface Course Class I			Tons	124.0
Protective Coat			Sq. Yds.	536

* Quantities shown above for both Roadways

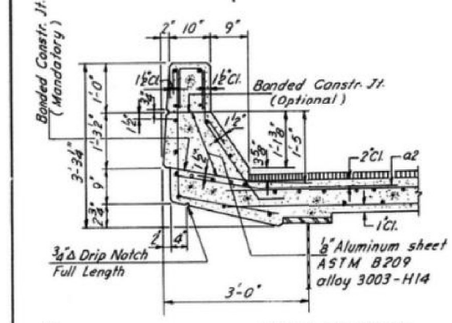

CURB SECTION

Cost of Aluminum sheet will be incidental to Class X Concrete

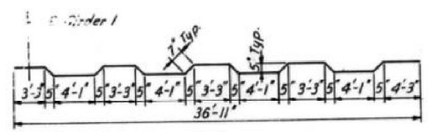

BAR a

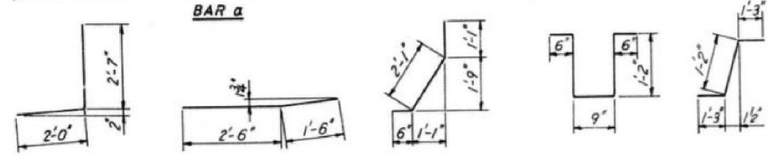

BAR d BAR a2 BAR d1 BAR C BAR C1

HALF-PLAN

South Bound Roadway as shown
North Bound Roadway Same by Rotating 180° about ℄ Harman Hwy

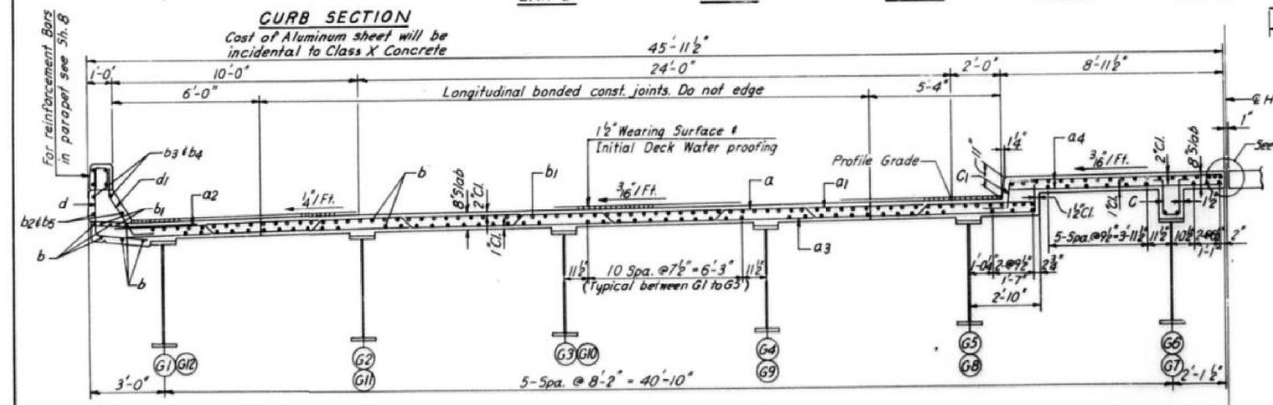

CROSS SECTION

Southbound Roadway looking North
Symmetrical about ℄ Harman Hwy

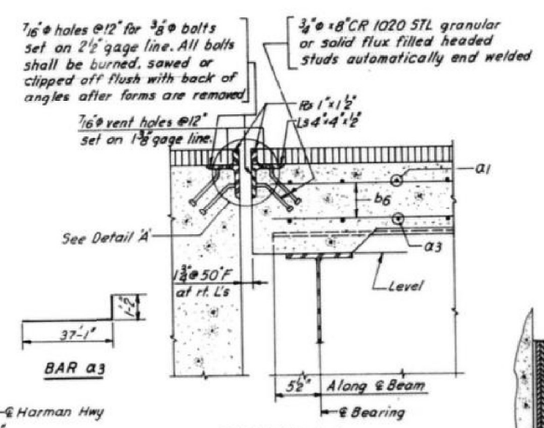

BAR a3

SECTION A-A

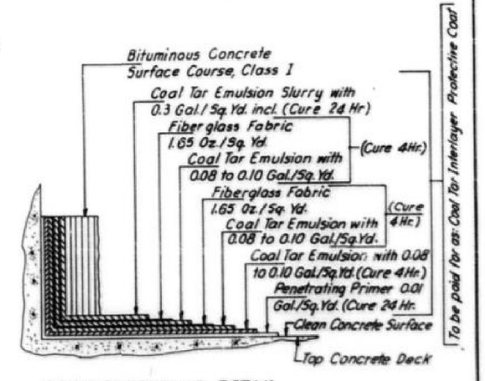

DECK SURFACING DETAIL

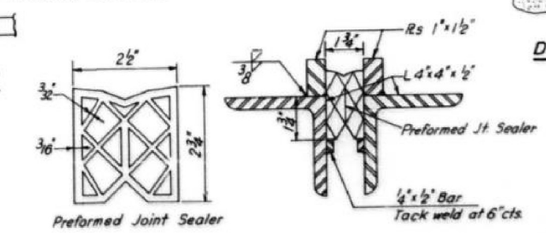

DETAIL 'A'

STATE OF ILLINOIS
DIVISION OF HIGHWAYS
SUPERSTRUCTURE SPANS 2 & 3
HARMAN HIGHWAY (F.A.S. RT. 389)
OVER
F.A.I. ROUTE 474
STA. 284+70.45
F.A.I. RT. 474 PEORIA COUNTY SECTION 72-3HB-4

CHRISTIAN-ROGE AND ASSOC. ENGINEERS
CHICAGO, ILLINOIS

SHEET 3 OF 17

DESIGNED BY J.J.
DRAWN BY J.J.
CHECKED BY S.K. & A.T.

MODEL: Default
FILE NAME: P:\Civil_IDOT_DIST4\PFB 194-035_var PH I-II 31200320\WO 10 Airport Road Phase 2 31200320-10\CAD Sheets\0468886-sht-exbridgeplans.dgn

The Upchurch Group
architects engineers surveyors
Professional Design Firm Corporation
License No. 184-003401
e-mail: upchurchgroup@upchurchgroup.com
123 North 15th Street
Mattoon, IL 61938
Phone: 217.235.3177

USER NAME = Sta42	DESIGNED - MJS	REVISED -
TUG PROJECT NO. 3120032-10	DRAWN -	REVISED -
PLOT SCALE = 100.0000 ' / in.	CHECKED - MJS	REVISED -
PLOT DATE = 6/20/2023	DATE -	REVISED -

STATE OF ILLINOIS
DEPARTMENT OF TRANSPORTATION

EXISTING STRUCTURE PLANS
AIRPORT ROAD OVER I-474

SCALE: 100.0000 ' / in. SHEET OF SHEETS STA. TO STA.

F.A.I. RTE.	SECTION	COUNTY	TOTAL SHEETS	SHEET NO.
474	(72-3HB-4)BR	PEORIA	175	121
		CONTRACT NO. 68886		
	ILLINOIS	FED. AID PROJECT		

FOR INFORMATION ONLY

ROUTE NO.	SECTION	COUNTY	TOTAL SHEETS	SHEET NO.
F.A.I. - 474	72 - 3HB - 4	PEORIA	27	11
FED. ROAD DIV. NO. 7		ILLINOIS	PROJECT	

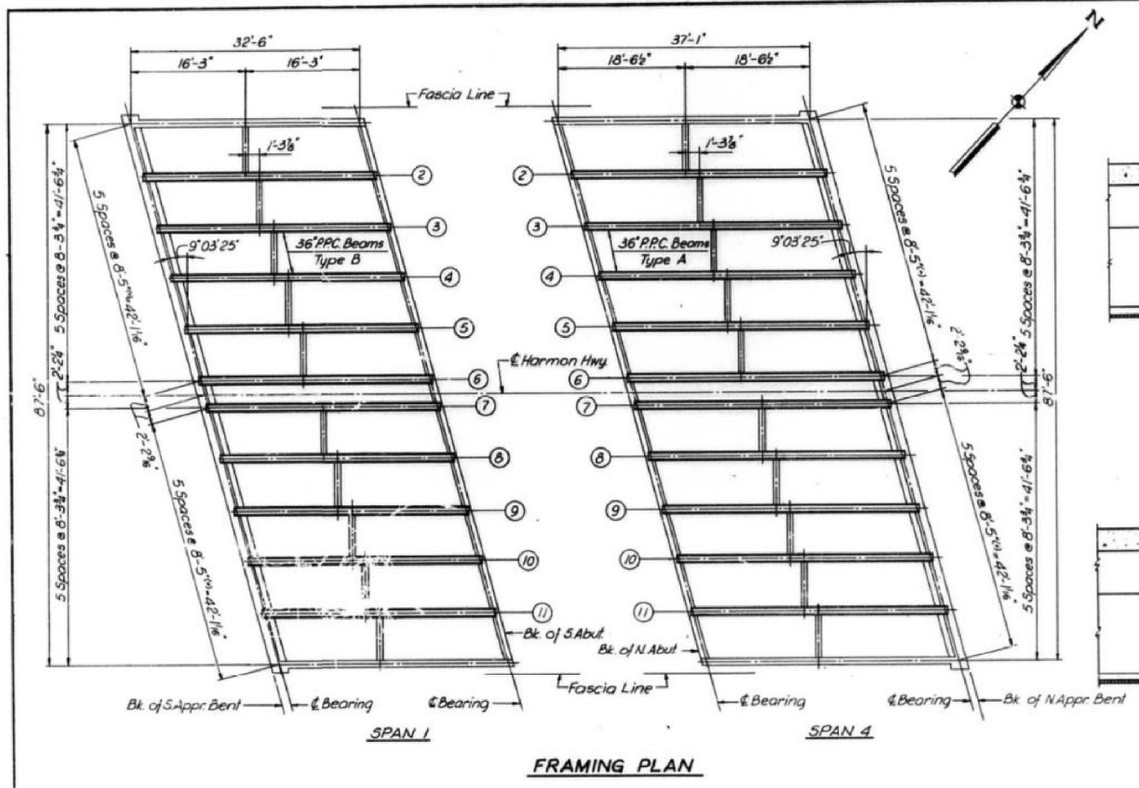

FRAMING PLAN

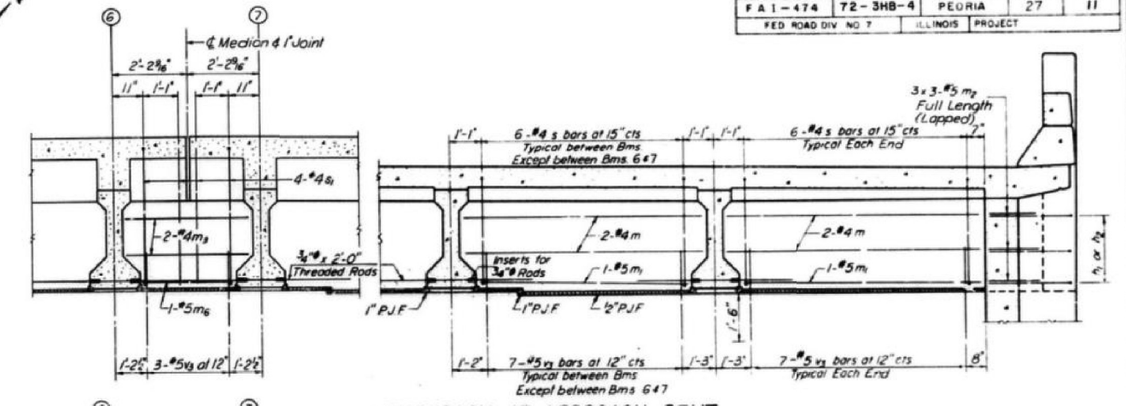

DIAPHRAGM AT APPROACH BENT

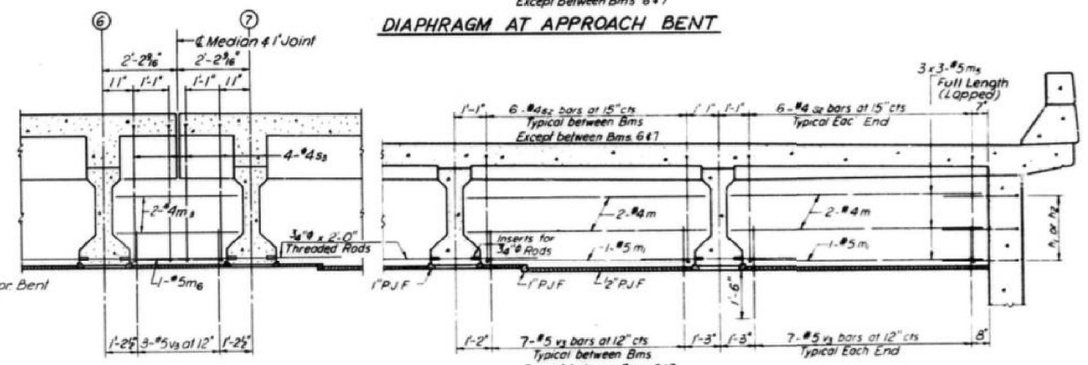

DIAPHRAGM AT ABUTMENT

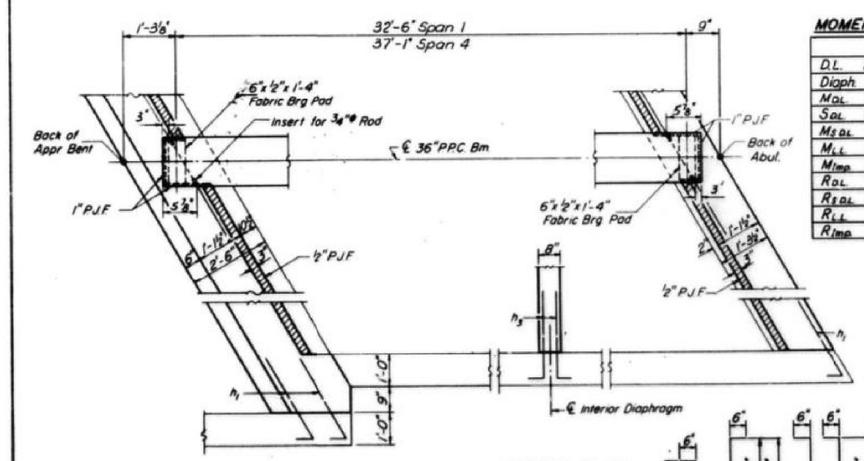

PARTIAL PLAN

TABLE OF MOMENTS AND SHEARS

		SPAN 1	SPAN 4
D.L.	k/ft	1.22	1.22
Diaph.	k	2.04	2.04
M_{DL}	'k	17.9	22.4
S_{DL}	k/ft	0.395	0.395
M_{SDL}	'k	52.5	67.5
M_{LL}	'k	241.0	301.0
$M_{Imp.}$	'k	72.5	90.0
R_{DL}	k	19.8	22.6
R_{SDL}	k	6.4	7.4
R_{LL}	k	38.5	40.1
$R_{Imp.}$	k	11.5	12.1

TOP OF BEAM ELEVATIONS

Beam	℄ Brg. S. Appr. Bent	℄ Brg. S. Abutment	℄ Brg. N. Abutment	℄ Brg. N. Appr. Bent
2	639.24	639.11	638.33	638.18
3	639.37	639.24	638.46	638.31
4	639.49	639.36	638.58	638.44
5	639.62	639.49	638.71	638.56
6	639.74	639.61	638.83	638.68
7	639.74	639.61	638.83	638.68
8	639.60	639.47	638.69	638.55
9	639.47	639.34	638.56	638.41
10	639.33	639.20	638.42	638.28
11	639.19	639.07	638.29	638.14

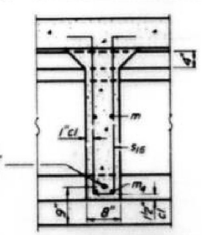

SECTION THRU INTERIOR DIAPHRAGM

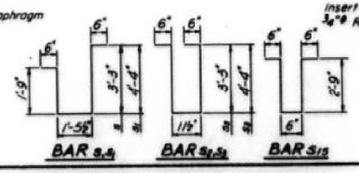

BAR $s_{1,4}$ BAR $s_{2,3,5}$ BAR s_{16}

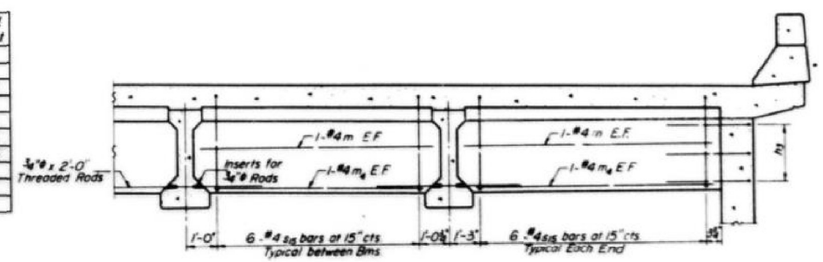

INTERIOR DIAPHRAGM

NOTES:
Bars s thru s_6, s_{16} and m thru m_6 are billed with Superstructure Bill of Material on sheet #2.
Bars h_1, h_2, h_3 & v_3 are billed with Abutment Bill of Material on sheet #2.
See sheet #2 for sections thru abutment and approach bent diaphragms.

DESIGNED BY A.T.
DRAWN BY E.F.
CHECKED BY S.K.

STATE OF ILLINOIS
DIVISION OF HIGHWAYS
APPROACH SPANS DETAILS
HARMAN HIGHWAY (F.A.S. RT. 389)
OVER
F.A.I. ROUTE 474
STA. 264+70.45
F.A.I. RT. 474 PEORIA COUNTY SECTION 72-3HB-4
CHRISTIAN-ROGE AND ASSOC. ENGINEERS
CHICAGO, ILLINOIS
SHEET 4 of 17

FOR INFORMATION ONLY

ROUTE NO.	SECTION	COUNTY	TOTAL SHEETS	SHEET NO.
F.A.I.-474	72-3HB-4	PEORIA	27	12
FED. ROAD DIV. NO. 7	ILLINOIS	PROJECT		

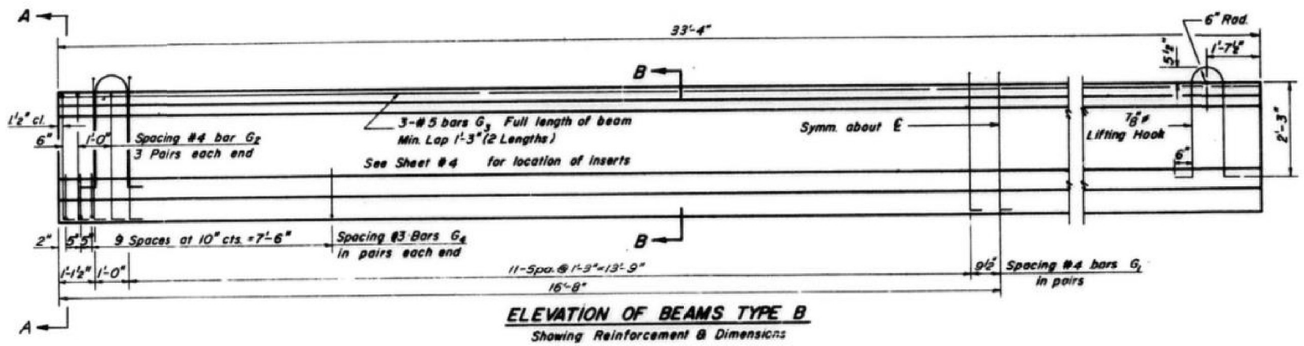

ELEVATION OF BEAMS TYPE B
Showing Reinforcement & Dimensions

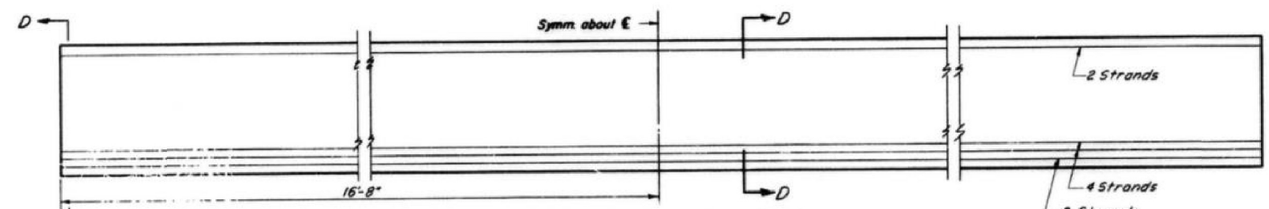

ELEVATION OF BEAMS TYPE B
Showing Prestressing Steel

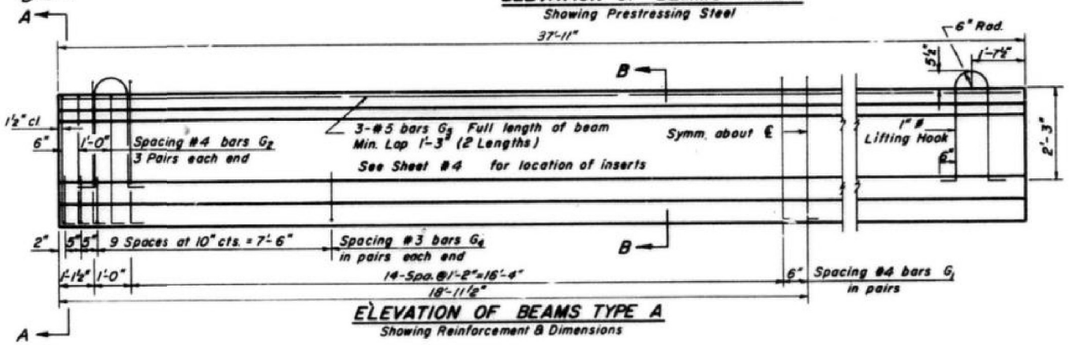

ELEVATION OF BEAMS TYPE A
Showing Reinforcement & Dimensions

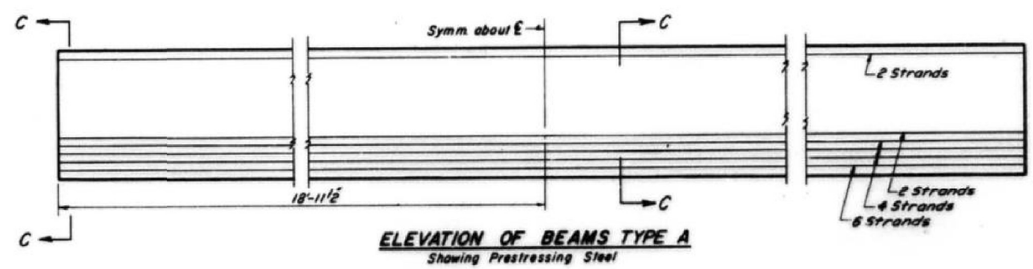

ELEVATION OF BEAMS TYPE A
Showing Prestressing Steel

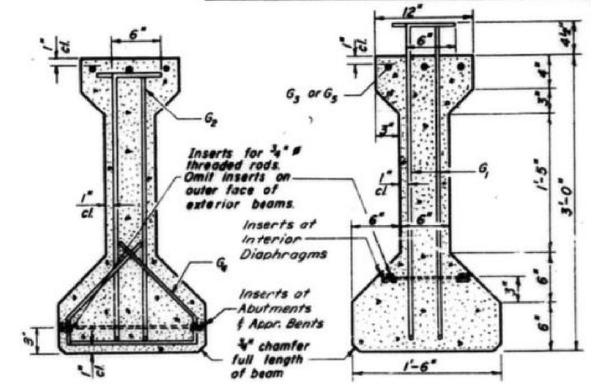

SECTION A-A

SECTION B-B

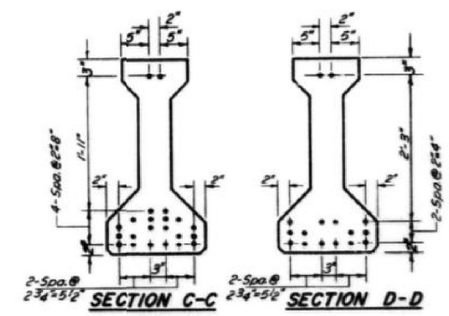

SECTION C-C

SECTION D-D

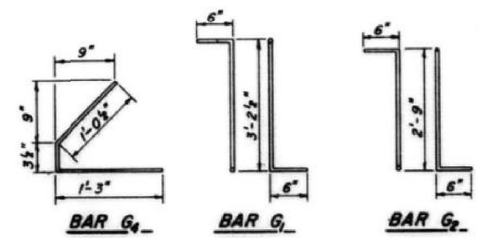

BAR G_4

BAR G_1

BAR G_2

*BAR LIST

Bar	No. Type A	No. Type B	Size	Length	Shape
G_1	66	54	#4	4'-2½"	⌐L
G_2	12	12	#4	3'-9"	⌐L
G_3	—	6	#5	17'-2	—
G_4	48	48	#3	2'-7"	L
G_5	6	—	#5	19'-9"	—

* For one beam only.

NOTES

All inserts and threaded rods for inserts, reinforcing and Prestressing Steel, and other items which are cast into the Precast Concrete I-Beams shall be included in the contract unit price per lineal foot of "Furnishing And Erecting Precast Prestressed Concrete I-Beams, 36 In."

Prestressing Steel shall have a nominal diameter of "½".

Inserts for ¾" ϕ threaded rods are to be two strut, coil type for interior I-Beams and single coil, [illegible] loop type for exterior I-Beams.

Steel for lifting hooks shall be A.S.T.M. A-306 Grade 70-80.

Ends of beams to be encased with cast in place concrete shall not be coated with asphalt paint.

BILL OF MATERIAL

Item	Unit	Total
Furnishing & Erecting Precast Prestressed Concrete I-Beams, 36"	Lin. Ft.	719

STATE OF ILLINOIS
DIVISION OF HIGHWAYS
PRESTRESSED BEAM DETAILS
HARMAN HIGHWAY (F.A.S. RT. 389)
OVER
F.A.I. ROUTE 474
STA. 284+70.45
F.A.I. RT. 474 PEORIA COUNTY SECTION 72-3HB-4
CHRISTIAN-ROSE AND ASSOC. ENGINEERS
CHICAGO, ILLINOIS
SHEET 5 of 17

DESIGNED BY A. T.
DRAWN BY W. E.
CHECKED BY A. T.

MODEL: Default
FILE NAME: P:\CIVIL\IDOT_DIST4\PTB 194-035 var PH I,II 3120032\WO 10 Airport Road Phase 2 3120032-10\CAD Sheets\D468886-sht-exbridgeplans.dgn

The Upchurch Group
architects engineers surveyors
Professional Design Firms Corporation License No.: 184-003-001
123 North 15th Street Mattoon, IL 61938
Phone: 217.235.3177
e-mail: upchurchgroup@upchurchgroup.com

USER NAME = Sta42	DESIGNED - MJS	REVISED -	
TUG PROJECT NO. 3120032-10	DRAWN -	REVISED -	
PLOT SCALE = 100.0000 ' / in.	CHECKED - MJS	REVISED -	
PLOT DATE = 6/20/2023	DATE -	REVISED -	

STATE OF ILLINOIS
DEPARTMENT OF TRANSPORTATION

EXISTING STRUCTURE PLANS
AIRPORT ROAD OVER I-474

SCALE: 100.0000 ' / in. SHEET OF SHEETS STA. TO STA.

F.A.I. RTE.	SECTION	COUNTY	TOTAL SHEETS	SHEET NO.
474	(72-3HB-4)BR	PEORIA	175	123
		CONTRACT NO. 68886		
	ILLINOIS	FED. AID PROJECT		

FOR INFORMATION ONLY

ROUTE NO.	SECTION	COUNTY	TOTAL SHEETS	SHEET NO.
F.A.I.-474	72-3HB-4	PEORIA	27	15
FED. ROAD DIV. NO. 7	ILLINOIS	PROJECT		

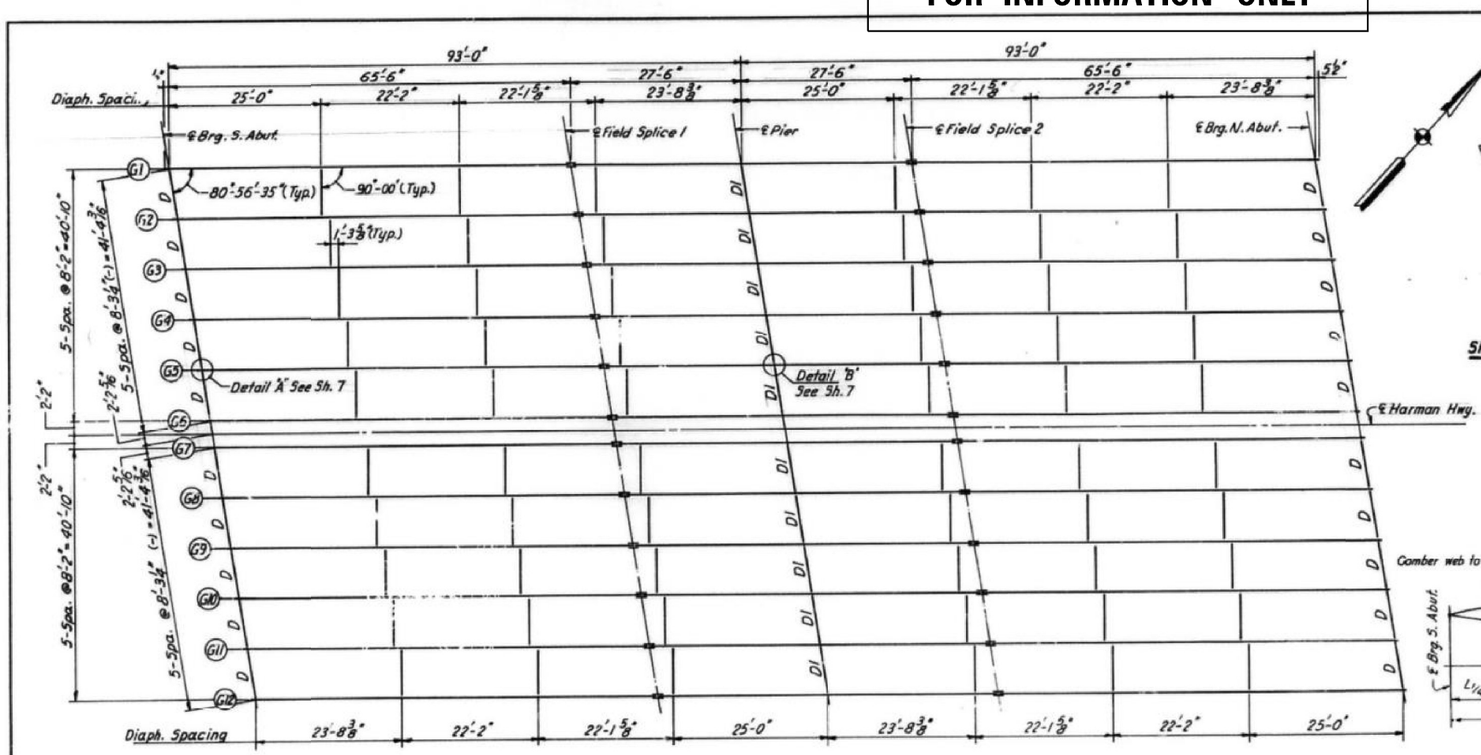

FRAMING PLAN

Note: All Diaphragms D2 unless otherwise noted

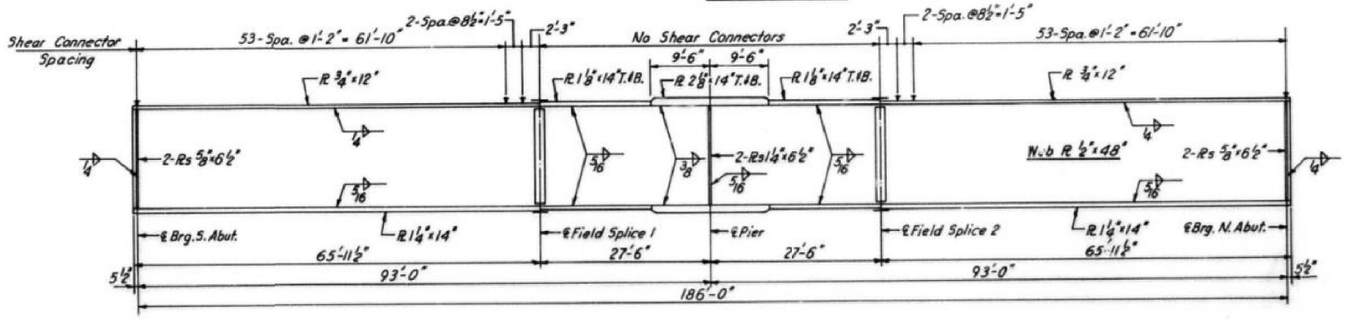

GIRDER ELEVATION

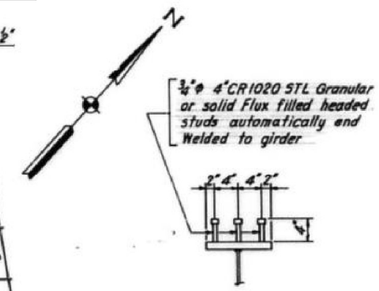

SHEAR CONNECTOR DETAIL

No Req'd = 4032

TOP OF WEB ELEVATION FOR FABRICATION

Girder	℄ Brg. S. Abutment	℄ Field Splice 1	℄ Brg. Pier	℄ Field Splice 2	℄ Brg N. Abutment
1	638.94	638.62	638.46	638.40	638.20
2	639.11	638.78	638.62	638.56	638.36
3	639.23	638.90	638.74	638.68	638.48
4	639.35	639.02	638.86	638.80	638.61
5	639.47	639.15	638.99	638.93	638.73
6	639.59	639.27	639.11	639.05	638.85
7	639.59	639.27	639.11	639.05	638.95
8	639.46	639.13	638.97	638.91	638.72
9	639.33	639.00	638.84	638.78	638.58
10	639.19	638.87	638.71	638.65	638.45
11	639.06	638.74	638.58	638.52	638.32
12	638.89	638.56	638.40	638.34	638.14

INTERIOR GIRDER MOMENT TABLE

		·4 Span 2	Pier	·6 Span 3
Is	(in⁴)	19,683	42,004	19,683
Ic	(in⁴)	53,677	—	53,677
Ss	(in³)	934.6	1,610	934.6
Sc	(in³)	1306	—	1306
Q	(K/i)	1.119	1.119	1.119
M℄	(1K)	587.4	1,434.7	587.4
fs℄	(Ksi)	7.5	10.7	7.5
Sa	(K/i)	.430	.430	.430
Ms℄	(1K)	278.0	414.1	278.0
M½	(1K)	874.0	680.0	874.0
Mimp	(1K)	185.1	149.1	185.1
Total	(1K)	1,337.1	1,243.2	1,337.1
fs½	(Ksi)	12.3	9.3	12.3
fs Total	(Ksi)	19.8	20.0	19.8
VR	(K)	57.8	—	57.8

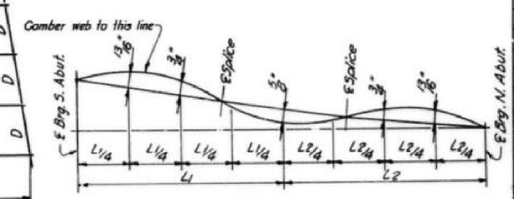

CAMBER DIAGRAM

INTERIOR GIRDER REACTION TABLE

	S. Abut.	Pier	N. Abut.
R℄ (K)	51.3	183.0	51.3
R½ (K)	50.0	76.2	50.0
Imp. (K)	10.7	16.4	10.7
R Total (K)	112.0	275.6	112.0

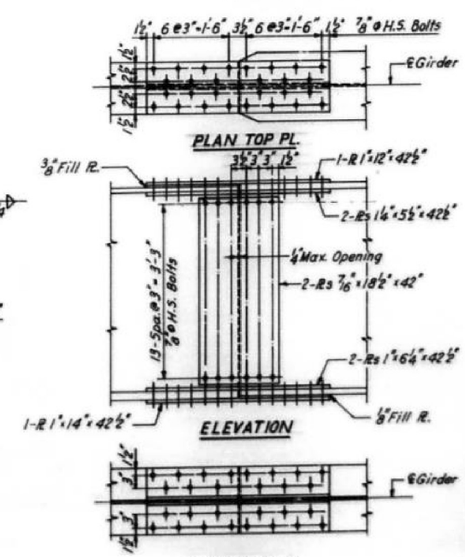

STATE OF ILLINOIS
DIVISION OF HIGHWAYS
STRUCTURAL STEEL
HARMAN HIGHWAY (F.A.S. RT. 389)
OVER
F.A.I. ROUTE 474
STA. 284+70.45
F.A.I. RT. 474 PEORIA COUNTY SECTION 72-3HB-4
CHRISTIAN-ROSE AND ASSOC. ENGINEERS
CHICAGO, ILLINOIS
SHEET 6 OF 17

DESIGNED BY J.J.
DRAWN BY J.J.
CHECKED BY A.T.

MODEL: Default
FILE NAME: P:\Civil\ IDOT DISTAUPTB 194-033 var PH I-II 3120032\WO 10 Airport Road Phase 2 3120032-10\CAD Sheets\D468886-sht-exhibiteplans.dgn

The Upchurch Group
architects engineers surveyors
Professional Design Firm Corporation License No. 184-003001
123 North 15th Street Mattoon, IL 61938
Phone: 217.235.3177
e-mail: upchurchgroup@upchurchgroup.com

USER NAME = Sta42	DESIGNED - MJS	REVISED -	
TUG PROJECT NO. 3120032-10	DRAWN -	REVISED -	
PLOT SCALE = 100.0000 ' / in.	CHECKED - MJS	REVISED -	
PLOT DATE = 6/20/2023	DATE -	REVISED -	

STATE OF ILLINOIS
DEPARTMENT OF TRANSPORTATION

EXISTING STRUCTURE PLANS
AIRPORT ROAD OVER I-474

SCALE: 100.0000 ' / in. SHEET OF SHEETS STA. TO STA.

F.A.I. RTE.	SECTION	COUNTY	TOTAL SHEETS	SHEET NO.
474	(72-3HB-4)BR	PEORIA	175	124
		CONTRACT NO. 68886		
	ILLINOIS	FED. AID PROJECT		

FOR INFORMATION ONLY

ROUTE NO.	SECTION	COUNTY	TOTAL SHEETS	SHEET NO.
F.A.I.-474	72-3HB-4	PEORIA	27	14
FED. ROAD DIV. NO. 7		ILLINOIS	PROJECT	

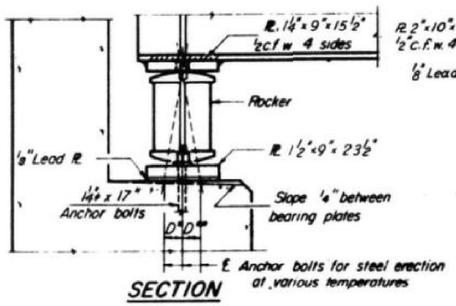

SECTION

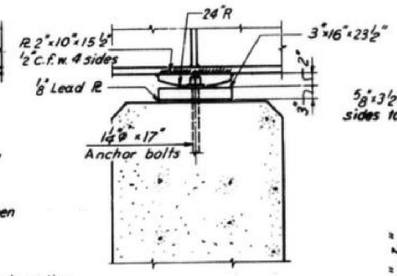

SECTION

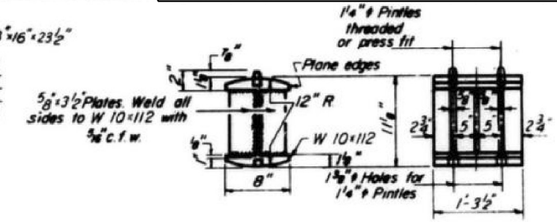

ROCKER

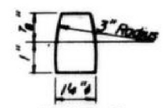

PINTLE

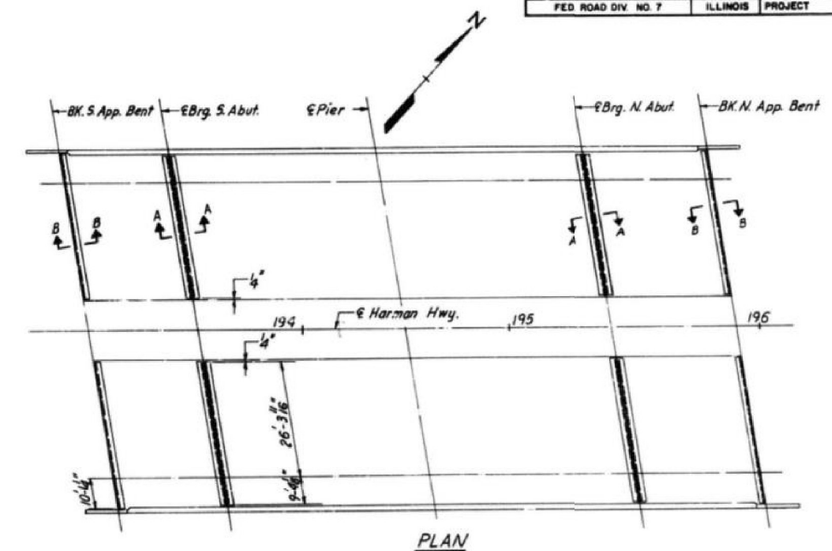

PLAN

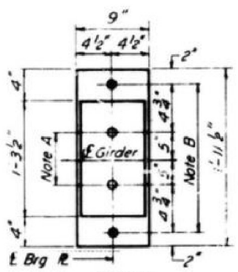

PLAN

AT ABUTMENTS

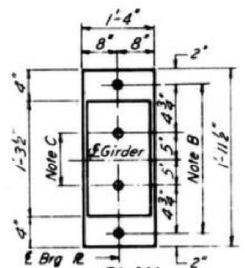

PLAN

AT PIER

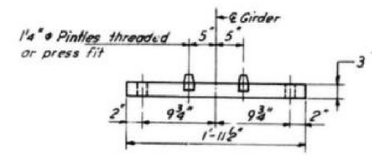

BOTTOM PL. AT PIER

NOTE A

1⅜" ϕ Holes - 1" deep in top PL for pintles. Thread or press fit pintles into bottom PL

NOTE B

1¾" ϕ Holes for 1½" ϕ anchor bolts 5/16" x 2½" x 2½" PL Washers under nut

NOTE C

1⅜" ϕ Holes 1" deep for 1¼" ϕ pintles

NOTES ON SETTING OF ANCHOR BOLTS AT EXP. BRGS.

a) D* (Side of brg. away from fixed brg.) D* = ⅛" per each 100' of expansion for every 15° fall below the normal temp. of 50°F

D** (Side of brg. toward fixed brg.) D** = ⅛" per each 100' of expansion for every 15° rise above the normal temp. of 50°F

b) After Girders have been erected and dimensions D* or D** determined, holes shall be drilled and anchor bolts shall be grouted in place. All fixed anchor bolts may be built into the masonry

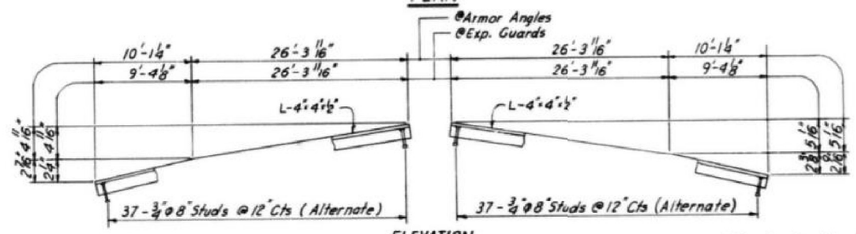

ELEVATION

EXPANSION GUARDS & ARMOR ANGLES

Note: for Section A-A & B-B See Sheet 2 & 3

BEARING ASSEMBLY DETAILS

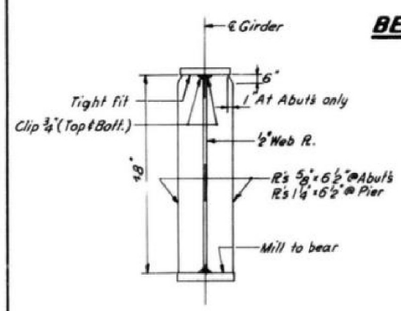

BEARING STIFFENERS

Note: All Bearing Stiffeners to be vertical

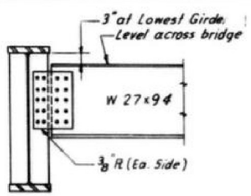

DIAPHRAGM D1

10 Required

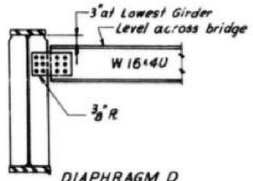

DIAPHRAGM D

20 Required

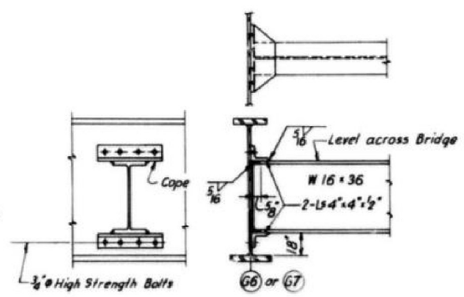

DIAPHRAGM D2

60 Required

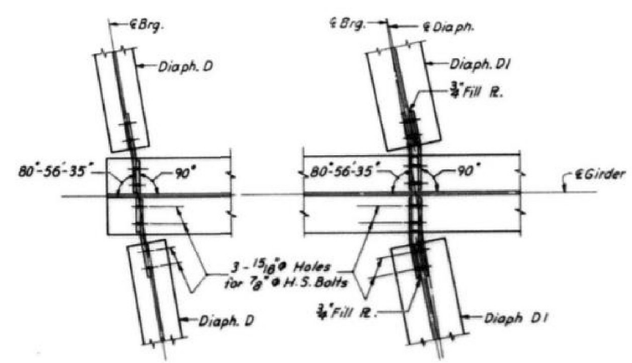

DETAIL 'A'

DETAIL 'B'

DESIGNED BY J.J.
DRAWN BY J.J.
CHECKED BY A.T.

STATE OF ILLINOIS
DIVISION OF HIGHWAYS
STRUCTURAL STEEL
HARMAN HIGHWAY (F.A.S. RT. 389)
OVER
F.A.I. ROUTE 474
STA. 284+70.45
F.A.I. RT. 474 PEORIA COUNTY SECTION 72-3HB-4
CHRISTIAN-ROGE AND ASSOC. ENGINEERS
CHICAGO, ILLINOIS
SHEET 7 of 17

MODEL: Default
FILE NAME: P:\Civil_IDOT_DIST4\PTB 194-035 var PH 1,II 3120032\WO 10 Airport Road Phase 2 3120032-10\CAD Sheets\D468886-int-exbridgeplans.dgn

FOR INFORMATION ONLY

ROUTE NO.	SECTION	COUNTY	TOTAL SHEETS	SHEET NO.
F.A.I.-474	72-3HB-4	PEORIA	27	15
FED. ROAD DIV. NO. 7	ILLINOIS	PROJECT		

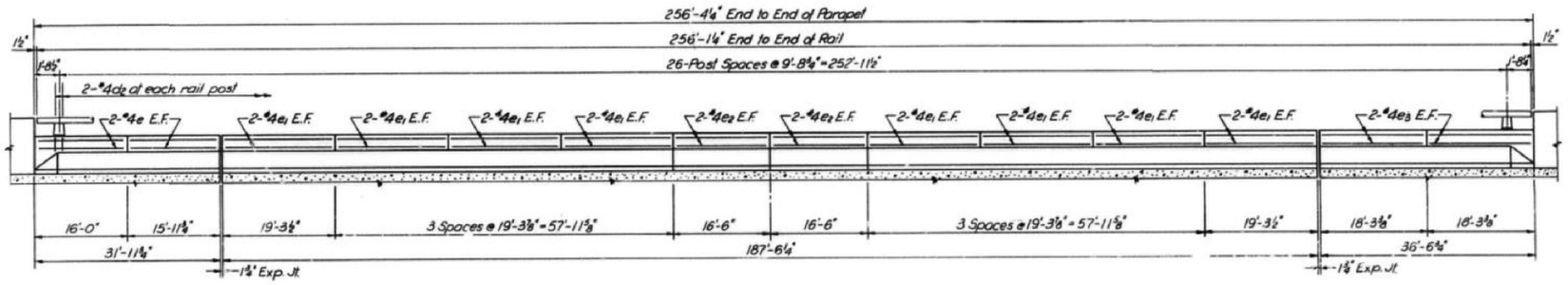

PARAPET ELEVATION
Showing Inside Face

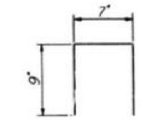

BAR d2

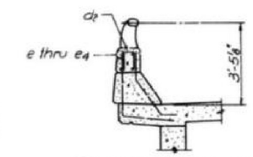

SECTION THRU CURB

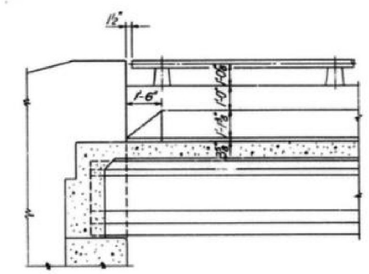

INSIDE VIEW AT APPROACH BENT

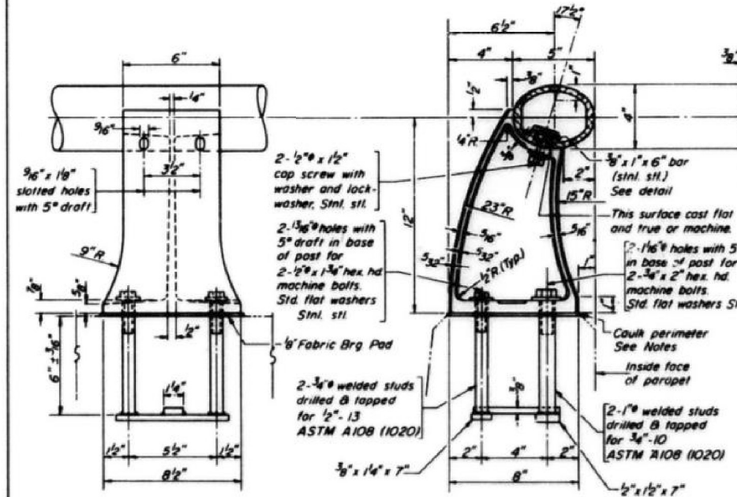

RAIL POST DETAILS

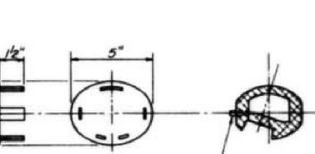

CAST END CAP
DRIVE FIT TYPE
4 Required

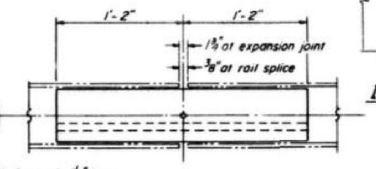

RAIL SPLICE

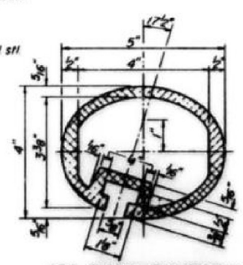

SEC. THRU ELLIPTICAL RAIL SECTION

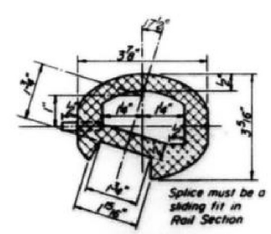

SEC. THRU SPLICE

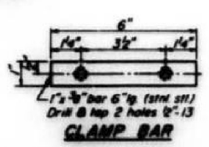

CLAMP BAR

Two component non-staining gray sealing compound with polysulfide liquid polymers-gun grade with primer.

½" Preformed Cork Asphalt Joint Filler. (meets qualifications for ASTM: Designation D 1751) Cost incidental.

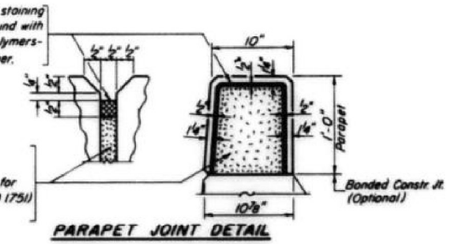

PARAPET JOINT DETAIL

NOTES:

All Aluminum Alloy Extruded Rail shall be supplied in modular lengths of 30 feet, except at the end of bridge or over open joints in bridge deck where the rail shall be attached to a minimum of 2 posts. If the rail is on a horizontal curve of 2300 foot radius or less, the modular lengths may be reduced but shall be attached to a minimum of 2 posts.

All joints in rail shall be spliced per detail.

Provide 1 - ⅛" and 2 - 1/16" Aluminum Shims for 25% of the Posts. Rail element shall be parallel to Grade - high spots shall be ground and low spots shimmed.

Seal perimeter of base of post to parapet with two component non-staining gray sealing compound with polysulfide liquid polymers, gun grade with primer. Fabric Bearing Pad shall have same dimensions as base of post.

Aluminum alloy rail shall conform to ASTM B221 alloy 6061-T6 or 6351-T5 with min. yield 35 ksi, min. tensile 38 ksi, and elongation of 10% in 2 inches.

PARAPETS & RAILS BILL OF MATERIAL

Bar	No.	Size	Length	Shape
e	16	#4	15'-8"	
e1	64	#4	19'-0"	
e2	16	#4	16'-2"	
e3	16	#4	18'-0"	
d2	108	#4	2'-1"	
Reinforcement Bars			Lbs.	1,500
Class X Concrete			Cu. Yds.	15.2
Aluminum Railing			Lin. Ft.	513

STATE OF ILLINOIS
DIVISION OF HIGHWAYS
ALUMINUM RAILING
HARMAN HIGHWAY (F.A.S. RT. 389)
OVER
F.A.I. ROUTE 474
STA. 284+70.45
F.A.I. RT. 474 PEORIA COUNTY SECTION 72-3HB-4

CHRISTIAN-ROGE AND ASSOC. ENGINEERS
CHICAGO, ILLINOIS

SHEET 8 of 17

DESIGNED BY E.F.
DRAWN BY E.F.
CHECKED BY S.K.

MODEL: Default
FILE NAME: P:\Civil_IDOT_DIST4\PTB_194-035_var PH I-II\3120032\WO 10 Airport Road Phase 2 3120032-10\CAD Sheets\D468886-sht-exbridgeplans.dgn

The Upchurch Group
architects engineers surveyors
Professional Design Firm Corporation License No. 184-001401
123 North 15th Street Mattoon, IL 61938
Phone: 217.235.3177
e-mail: upchurchgroup@upchurchgroup.com

USER NAME = Sta42	DESIGNED - MJS	REVISED -
TUG PROJECT NO. 3120032-10	DRAWN -	REVISED -
PLOT SCALE = 100.0000 ' / in.	CHECKED - MJS	REVISED -
PLOT DATE = 6/20/2023	DATE -	REVISED -

STATE OF ILLINOIS
DEPARTMENT OF TRANSPORTATION

EXISTING STRUCTURE PLANS
AIRPORT ROAD OVER I-474

SCALE: 100.0000 ' / in. SHEET OF SHEETS STA. TO STA.

F.A.I. RTE.	SECTION	COUNTY	TOTAL SHEETS	SHEET NO.
474	(72-3HB-4)BR	PEORIA	175	126
		CONTRACT NO. 68886		
		ILLINOIS	FED. AID PROJECT	

FOR INFORMATION ONLY

ROUTE NO.	SECTION	COUNTY	TOTAL SHEETS	SHEET NO.
F.A.I.-474	72-3HB-4	PEORIA	27	16
FED. ROAD DIV. NO. 7	ILLINOIS	PROJECT		

C. L. CURTAIN WALL & GIRDER 1

LOCATION	STATION	OFFSET	Theoretical Grade Elevations	Theo. Grade Elevs. Adj. For Dead Load Deflection
BK S APP	19312.529	-43.750	639.934	639.934
℄ BRG S APP	19313.589	-43.750	639.804	639.804
A	19323.589	-43.750	639.764	639.764
B	19333.589	-43.750	639.724	639.724
C	19343.589	-43.750	639.684	639.684
℄ W BRG S A	19346.089	-43.750	639.674	639.674
℄ E BRG S A	19347.865	-43.000	639.682	639.682
D	19357.865	-43.000	639.642	639.667
E	19367.865	-43.000	639.602	639.652
F	19377.865	-43.000	639.562	639.621
G	19387.865	-43.000	639.522	639.583
H	19397.865	-43.000	639.482	639.539
J	19407.865	-43.000	639.442	639.484
K	19417.865	-43.000	639.402	639.428
L	19427.865	-43.000	639.362	639.377
M	19437.865	-43.000	639.322	639.326
℄ PIER	19440.865	-43.000	639.310	639.310
N	19450.865	-43.000	639.270	639.281
O	19460.865	-43.000	639.230	639.253
P	19470.865	-43.000	639.190	639.227
Q	19480.865	-43.000	639.150	639.203
R	19490.865	-43.000	639.110	639.172
S	19500.865	-43.000	639.070	639.130
T	19510.865	-43.000	639.0[illegible]	639.087
U	19520.865	-43.000	638.990	639.022
V	19530.865	-43.000	638.950	638.958
℄ W BRG N A	19533.865	-43.000	638.938	638.938
℄ E BRG N A	19535.402	-43.750	638.876	[illegible]
W	19545.402	-43.750	638.8[illegible]	[illegible]
X	19555.402	-43.750	638.836	[illegible]
Y	19565.402	-43.750	638.796	638.796
℄ BRG N APP	19572.485	-43.750	638.768	638.768
BK N APP	19573.745	-43.750	638.888	638.888

BEAM 2 & GIRDER 2

LOCATION	STATION	OFFSET	Theoretical Grade Elevations	Theo. Grade Elevs. Adj. For Dead Load Deflection
BK S APP	19313.654	-35.437	639.976	639.976
℄ BRG S APP	19314.914	-35.437	639.971	639.971
A	19324.914	-35.437	639.931	639.938
B	19334.914	-35.437	639.891	639.899
C	19344.914	-35.437	639.851	639.859
℄ W BRG S A	19347.414	-35.437	639.841	639.841
℄ E BRG S A	19349.167	-34.833	639.846	639.846
D	19359.167	-34.833	639.806	639.831
E	19369.167	-34.833	639.766	639.815
F	19379.167	-34.833	639.726	639.785
G	19389.167	-34.833	639.686	639.747
H	19399.167	-34.833	639.646	639.703
J	19409.167	-34.833	639.606	639.647
K	19419.167	-34.833	639.566	639.592
L	19429.167	-34.833	639.526	639.541
M	19439.167	-34.833	639.486	639.489
℄ PIER	19442.167	-34.833	639.474	639.474
N	19452.167	-34.833	639.434	639.445
O	19462.167	-34.833	639.394	639.416
P	19472.167	-34.833	639.354	639.391
Q	19482.167	-34.833	639.314	639.366
R	19492.167	-34.833	639.274	639.336
S	19502.167	-34.833	639.234	639.294
T	19512.167	-34.833	639.194	639.251
U	19522.167	-34.833	639.154	639.186
V	19532.167	-34.833	639.114	639.121
℄ W BRG N A	19535.167	-34.833	639.102	639.102
℄ E BRG N A	19536.727	-35.437	639.084	639.084
W	19546.727	-35.437	639.044	639.055
X	19556.727	-35.437	639.004	639.019
Y	19566.727	-35.437	638.964	638.972
℄ BRG N APP	19573.810	-35.437	638.936	638.936
BK N APP	19575.070	-35.437	638.931	638.931

BEAM 3 & GIRDER 3

LOCATION	STATION	OFFSET	Theoretical Grade Elevations	Theo. Grade Elevs. Adj. For Dead Load Deflection
BK S APP	19314.979	-27.125	640.103	640.103
℄ BRG S APP	19316.239	-27.125	640.098	640.098
A	19326.239	-27.125	640.058	640.064
B	19336.239	-27.125	640.018	640.026
C	19346.239	-27.125	639.978	639.980
℄ W BRG S A	19348.739	-27.125	639.968	639.968
℄ E BRG S A	19350.469	-26.666	639.968	639.968
D	19360.469	-26.666	639.928	639.953
E	19370.469	-26.666	639.888	639.938
F	19380.469	-26.666	639.848	639.927
G	19390.469	-26.666	639.808	639.869
H	19400.469	-26.666	639.768	639.825
J	19410.469	-26.666	639.728	639.770
K	19420.469	-26.666	639.688	639.714
L	19430.469	-26.666	639.648	639.563
M	19440.469	-26.666	639.608	639.612
℄ PIER	19443.469	-26.666	639.594	639.596
N	19453.469	-26.666	639.556	639.567
O	19463.469	-26.666	639.516	639.539
P	19473.469	-26.666	639.476	639.513
Q	19483.469	-26.666	639.436	639.489
R	19493.469	-26.666	639.396	639.458
S	19503.469	-26.666	639.356	639.416
T	19513.469	-26.666	639.316	639.373
U	19523.469	-26.666	639.276	639.308
V	19533.469	-26.666	639.236	639.244
℄ W BRG N A	19536.469	-26.666	639.224	639.224
℄ E BRG N A	19538.052	-27.125	639.211	639.211
W	19548.052	-27.125	639.171	639.182
X	19558.052	-27.125	639.131	639.146
Y	19568.052	-27.125	639.091	639.099
℄ BRG N APP	19575.135	-27.125	639.062	639.062
BK N APP	19576.395	-27.125	639.057	639.057

BEAM 4 & GIRDER 4

LOCATION	STATION	OFFSET	Theoretical Grade Elevations	Theo. Grade Elevs. Adj. For Dead Load Deflection
BK S APP	19316.304	-18.812	640.227	640.227
℄ BRG S APP	19317.564	-18.812	640.222	640.222
A	19327.564	-18.812	640.182	640.189
B	19337.564	-18.812	640.142	640.150
C	19347.564	-18.812	640.102	640.104
℄ W BRG S A	19350.064	-18.812	640.092	640.092
℄ E BRG S A	19351.771	-18.499	640.090	640.090
D	19361.771	-18.499	640.050	640.075
E	19371.771	-18.499	640.010	640.061
F	19381.771	-18.499	639.970	640.029
G	19391.771	-18.499	639.930	639.991
H	19401.771	-18.499	639.890	639.947
J	19411.771	-18.499	639.850	639.892
K	19421.771	-18.499	639.810	639.836
L	19431.771	-18.499	639.770	639.785
M	19441.771	-18.499	639.730	639.734
℄ PIER	19444.771	-18.499	639.718	639.718
N	19454.771	-18.499	639.678	639.690
O	19464.771	-18.499	639.638	639.661
P	19474.771	-18.499	639.598	639.635
Q	19484.771	-18.499	639.558	639.611
R	19494.771	-18.499	639.518	639.580
S	19504.771	-18.499	639.478	639.538
T	19514.771	-18.499	639.438	639.495
U	19524.771	-18.499	639.398	639.430
V	19534.771	-18.499	639.358	639.366
℄ W BRG N A	19537.771	-18.499	639.346	639.346
℄ E BRG N A	19539.377	-18.812	639.335	639.335
W	19549.377	-18.812	639.295	639.306
X	19559.377	-18.812	639.255	639.270
Y	19569.377	-18.812	639.215	639.223
℄ BRG N APP	19576.460	-18.812	639.187	639.187
BK N APP	19577.720	-18.812	639.182	639.182

PROFILE GRADE W.B. RDWY.

LOCATION	STATION	OFFSET	Theoretical Grade Elevations	Theo. Grade Elevs. Adj. For Dead Load Deflection
BK S APP	19317.549	-11.000	640.344	640.344
℄ BRG S APP	19318.809	-11.000	640.339	640.339
A	19328.809	-11.000	640.299	640.306
B	19338.809	-11.000	640.259	640.267
C	19348.809	-11.000	640.219	640.221
℄ W BRG S A	19351.309	-11.000	640.209	640.209
℄ E BRG S A	19352.966	-10.999	640.203	640.203
D	19362.966	-10.999	640.163	640.187
E	19372.966	-10.999	640.123	640.172
F	19382.966	-10.999	640.083	640.141
G	19392.966	-10.999	640.043	640.104
H	19402.966	-10.999	640.003	640.060
J	19412.966	-10.999	639.963	640.004
K	19422.966	-10.999	639.923	639.948
L	19432.966	-10.999	639.883	639.897
M	19442.966	-10.999	639.843	639.846
℄ PIER	19445.966	-10.999	639.831	639.831
N	19455.966	-10.999	639.791	639.802
O	19465.966	-10.999	639.751	639.773
P	19475.966	-10.999	639.711	639.747
Q	19485.966	-10.999	639.671	639.723
R	19495.966	-10.999	639.631	639.692
S	19505.966	-10.999	639.591	639.650
T	19515.966	-10.999	639.551	639.607
U	19525.966	-10.999	639.511	639.543
V	19535.966	-10.999	639.471	639.478
℄ W BRG N A	19538.966	-10.999	639.459	639.459
℄ E BRG N A	19540.622	-11.000	639.452	639.452
W	19550.622	-11.000	639.412	639.423
X	19560.622	-11.000	639.372	639.387
Y	19570.622	-11.000	639.332	639.340
℄ BRG N APP	19577.705	-11.000	639.304	639.304
BK N APP	19578.966	-11.000	639.299	639.299

BEAM 5 & GIRDER 5

LOCATION	STATION	OFFSET	Theoretical Grade Elevations	Theo. Grade Elevs. Adj. For Dead Load Deflection
BK S APP	19317.629	-10.500	640.352	640.352
℄ BRG S APP	19318.889	-10.500	640.347	640.347
A	19328.889	-10.500	640.307	640.313
B	19338.889	-10.500	640.267	640.275
C	19348.889	-10.500	640.227	640.228
℄ W BRG S A	19351.389	-10.500	640.217	640.217
℄ E BRG S A	19353.072	-10.333	640.213	640.213
D	19363.072	-10.333	640.173	640.197
E	19373.072	-10.333	640.133	640.182
F	19383.072	-10.333	640.093	640.151
G	19393.072	-10.333	640.053	640.114
H	19403.072	-10.333	640.013	640.070
J	19413.072	-10.333	639.973	640.014
K	19423.072	-10.333	639.933	639.958
L	19433.072	-10.333	639.893	639.907
M	19443.072	-10.333	639.853	639.856
℄ PIER	19446.072	-10.333	639.841	639.841
N	19456.072	-10.333	639.801	639.812
O	19466.072	-10.333	639.761	639.783
P	19476.072	-10.333	639.721	639.757
Q	19486.072	-10.333	639.681	639.733
R	19496.072	-10.333	639.641	639.702
S	19506.072	-10.333	639.601	639.660
T	19516.072	-10.333	639.561	639.617
U	19526.072	-10.333	639.521	639.553
V	19536.072	-10.333	639.481	639.488
℄ W BRG N A	19539.072	-10.333	639.469	639.469
℄ E BRG N A	19540.702	-10.500	639.459	639.459
W	19550.702	-10.500	639.419	639.430
X	19560.702	-10.500	639.379	639.394
Y	19570.702	-10.500	639.339	639.347
℄ BRG N APP	19577.785	-10.500	639.311	639.311
BK N APP	19579.045	-10.500	639.306	639.306

BEAM 6 & GIRDER 6 SEE NOTE "X"

LOCATION	STATION	OFFSET	Theoretical Grade Elevations	Theo. Grade Elevs. Adj. For Dead Load Deflection
BK S APP	19318.954	-2.187	640.476	640.476
℄ BRG S APP	19320.214	-2.187	640.471	640.471
A	19330.214	-2.187	640.431	640.438
B	19340.214	-2.187	640.391	640.399
C	19350.214	-2.187	640.351	640.353
℄ W BRG S A	19352.714	-2.187	640.341	640.341
℄ E BRG S A	19354.374	-2.166	640.335	640.335
D	19364.374	-2.166	640.295	640.319
E	19374.374	-2.166	640.255	640.304
F	19384.374	-2.166	640.215	640.274
G	19394.374	-2.166	640.175	640.236
H	19404.374	-2.166	640.135	640.192
J	19414.374	-2.166	640.095	640.136
K	19424.374	-2.166	640.055	640.081
L	19434.374	-2.166	640.015	640.029
M	19444.374	-2.166	639.975	639.978
℄ PIER	19447.374	-2.166	639.963	639.963
N	19457.374	-2.166	639.923	639.934
O	19467.374	-2.166	639.883	639.905
P	19477.374	-2.166	639.843	639.879
Q	19487.374	-2.166	639.803	639.855
R	19497.374	-2.166	639.763	639.825
S	19507.374	-2.166	639.723	639.782
T	19517.374	-2.166	639.683	639.740
U	19527.374	-2.166	639.643	639.675
V	19537.374	-2.166	639.603	639.610
℄ W BRG N A	19540.374	-2.166	639.591	639.591
℄ E BRG N A	19542.027	-2.187	639.584	639.584
W	19552.027	-2.187	639.544	639.555
X	19562.027	-2.187	639.504	639.519
Y	19572.027	-2.187	639.464	639.472
℄ BRG N APP	19579.110	-2.187	639.436	639.436
BK N APP	19580.370	-2.187	639.430	639.430

DESIGNED BY A. J. C.
DRAWN BY A. J. C.
CHECKED BY A. T.

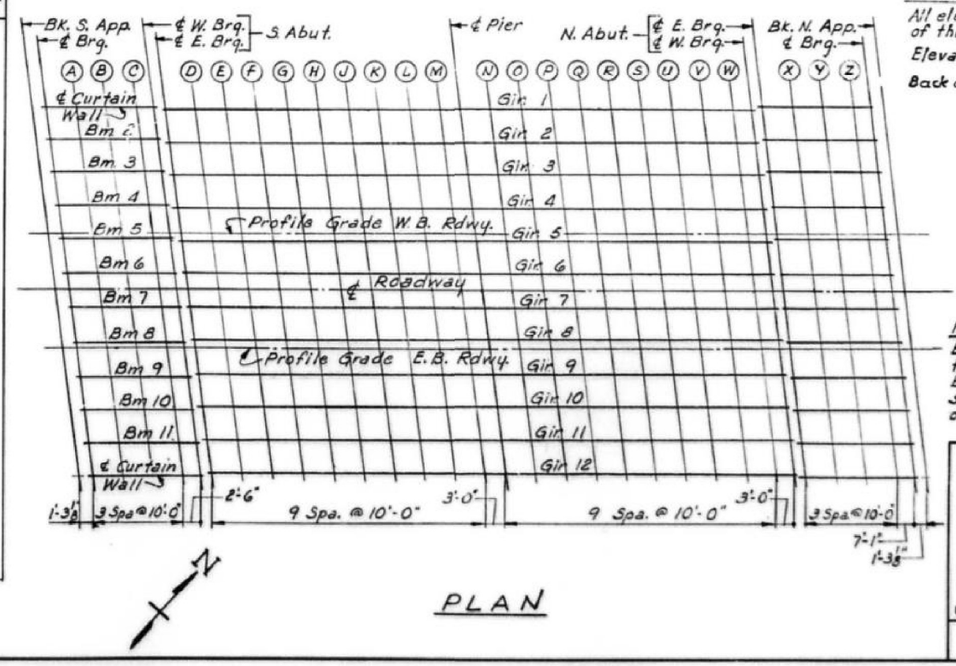

PLAN

Note:
All elevations in the Tables are given at the top of the concrete deck as shown in Detail A.

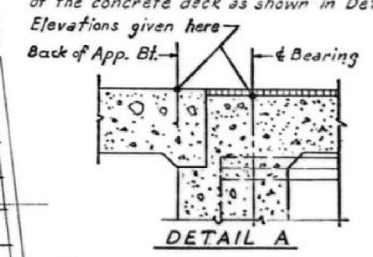

DETAIL A

NOTE "X"
Elevations at these lines are given at the theoretical top of slab which would be the projection of the roadway slab template to the ℄ of the Beam or Girder.

STATE OF ILLINOIS
DIVISION OF HIGHWAYS
ELEVATIONS
HARMAN HIGHWAY (F.A.S. RT. 389)
OVER
F.A.I. ROUTE 474
STA. 284 + 70.45
F.A.I. RT. 474 PEORIA COUNTY SECTION 72-3HB-4
CHRISTIAN-ROGE AND ASSOC. ENGINEERS
CHICAGO, ILLINOIS
SHEET 9 OF 17

MODEL: Default
FILE NAME: P:\Civil_IDOT_DIST4\PTB 194-035 var PH I of I\3120032\WO 10 Airport Road Phase 2 3120032-10\CAD Sheets\0468886-sht-exbridgeplans.dgn

FOR INFORMATION ONLY

ROUTE NO.	SECTION	COUNTY	TOTAL SHEETS	SHEET NO.
F.A.I.-474	72-3HB-4	PEORIA	27	17
FED. ROAD DIV. NO. 7		ILLINOIS	PROJECT	

BEAM 7 & GIRDER 7 SEE NOTE "X"

LOCATION	STATION	OFFSET	Theoretical Grade Elevations	Theo. Grade Elevs. Adj. For Dead Load Deflection
BK S APP	19319.651	2.187	640.473	640.473
℄ BRG S APP	19320.912	2.187	640.468	640.468
A	19330.912	2.187	640.428	640.435
B	19340.912	2.187	640.388	640.396
C	19350.912	2.187	640.348	640.350
℄ W BRG S A	19355.412	2.187	640.338	640.338
℄ E BRG S A	19355.065	2.166	640.332	640.332
D	19365.065	2.166	640.292	640.317
E	19375.065	2.166	640.252	640.301
F	19385.065	2.166	640.212	640.271
G	19395.065	2.166	640.172	640.233
H	19405.065	2.166	640.132	640.189
J	19415.065	2.166	640.092	640.133
K	19425.065	2.166	640.052	640.078
L	19435.065	2.166	640.012	640.027
M	19445.065	2.166	639.972	639.975
℄ PIER	19448.065	2.166	639.960	639.960
N	19458.065	2.166	639.920	639.931
O	19468.065	2.166	639.880	639.902
P	19478.065	2.166	639.840	639.877
Q	19488.065	2.166	639.800	639.852
R	19498.065	2.166	639.760	639.822
S	19508.065	2.166	639.720	639.780
T	19518.065	2.166	639.680	639.737
U	19528.065	2.166	639.640	639.672
V	19538.065	2.166	639.600	639.607
℄ W BRG N A	19541.065	2.166	639.588	639.588
℄ E BRG N A	19542.724	2.187	639.581	[illegible]
W	19552.724	2.187	639.541	[illegible]
X	19562.724	2.187	639.501	639.516
Y	19572.724	2.187	639.461	639.469
℄ BRG N APP	19579.807	2.187	639.433	639.433
BK N APP	19581.068	2.187	639.428	639.428

BEAM 8 & GIRDER 8

LOCATION	STATION	OFFSET	Theoretical Grade Elevations	Theo. Grade Elevs. Adj. For Dead Load Deflection
BK S APP	19320.976	10.500	640.338	640.338
℄ BRG S APP	19322.237	10.500	640.333	640.333
A	19332.237	10.500	640.293	640.300
B	19342.237	10.500	640.253	640.261
C	19352.237	10.500	640.213	640.215
℄ W BRG S A	19354.737	10.500	640.203	640.203
℄ E BRG S A	19356.367	10.333	640.199	640.199
D	19366.367	10.333	640.159	640.184
E	19376.367	10.333	640.119	640.169
F	19386.367	10.333	640.079	640.138
G	19396.367	10.333	640.039	640.100
H	19406.367	10.333	639.999	640.056
J	19416.367	10.333	639.959	640.001
K	19426.367	10.333	639.919	639.945
L	19436.367	10.333	639.879	639.894
M	19446.367	10.333	639.839	639.843
℄ PIER	19449.367	10.333	639.827	639.827
N	19459.367	10.333	639.787	639.799
O	19469.367	10.333	639.747	639.770
P	19479.367	10.333	639.707	639.744
Q	19489.367	10.333	639.667	639.720
R	19499.367	10.333	639.627	639.689
S	19509.367	10.333	639.587	639.647
T	19519.367	10.333	639.547	639.604
U	19529.367	10.333	639.507	639.539
V	19539.367	10.333	639.467	639.475
℄ W BRG N A	19542.367	10.333	639.455	639.455
℄ E BRG N A	19544.049	10.500	639.446	639.446
W	19554.049	10.500	639.406	639.417
X	19564.049	10.500	639.366	639.381
Y	19574.049	10.500	639.326	639.334
℄ BRG N APP	19581.132	10.500	639.298	639.298
BK N APP	19582.393	10.500	639.293	639.293

PROFILE GRADE E.B. HWY

LOCATION	STATION	OFFSET	Theoretical Grade Elevations	Theo. Grade Elevs. Adj. For Dead Load Deflection
BK S APP	19321.056	11.000	640.330	640.330
℄ BRG S APP	19322.316	11.000	640.325	640.325
A	19332.316	11.000	640.285	640.292
B	19342.316	11.000	640.245	640.253
C	19352.316	11.000	640.205	640.207
℄ W BRG S A	19354.816	11.000	640.195	640.195
℄ E BRG S A	19356.473	11.000	640.189	640.189
D	19366.473	11.000	640.149	640.173
E	19376.473	11.000	640.109	640.158
F	19386.473	11.000	640.069	640.127
G	19396.473	11.000	640.029	640.090
H	19406.473	11.000	639.989	640.046
J	19416.473	11.000	639.949	639.990
K	19426.473	11.000	639.909	639.934
L	19436.473	11.000	639.869	639.883
M	19446.473	11.000	639.829	639.832
℄ PIER	19449.473	11.000	639.817	639.817
N	19459.473	11.000	639.777	639.788
O	19469.473	11.000	639.737	639.759
P	19479.473	11.000	639.697	639.731
Q	19489.473	11.000	639.657	639.709
R	19499.473	11.000	639.617	639.678
S	19509.473	11.000	639.577	639.636
T	19519.473	11.000	639.537	639.593
U	19529.473	11.000	639.497	639.529
V	19539.473	11.000	639.457	639.464
℄ W BRG N A	19542.473	11.000	639.445	639.445
℄ E BRG N A	19544.129	11.000	639.438	639.438
W	19554.129	11.000	639.398	639.409
X	19564.129	11.000	639.358	639.373
Y	19574.129	11.000	639.318	639.326
℄ BRG N APP	19581.212	11.000	639.290	639.290
BK N APP	19582.473	11.000	639.285	639.285

BEAM 9 & GIRDER 9

LOCATION	STATION	OFFSET	Theoretical Grade Elevations	Theo. Grade Elevs. Adj. For Dead Load Deflection
BK S APP	19322.301	18.812	640.203	640.203
℄ BRG S APP	19323.562	18.812	640.198	640.198
A	19333.562	18.812	640.158	640.165
B	19343.562	18.812	640.118	640.126
C	19353.562	18.812	640.078	640.080
℄ W BRG S A	19356.062	18.812	640.068	640.068
℄ E BRG S A	19357.668	18.500	640.067	640.067
D	19367.668	18.500	640.027	640.051
E	19377.668	18.500	639.987	640.036
F	19387.668	18.500	639.947	640.006
G	19397.668	18.500	639.907	639.968
H	19407.668	18.500	639.867	639.924
J	19417.668	18.500	639.827	639.868
K	19427.668	18.500	639.787	639.813
L	19437.668	18.500	639.747	639.761
M	19447.668	18.500	639.707	639.710
℄ PIER	19450.668	18.500	639.695	639.695
N	19460.668	18.500	639.655	639.666
O	19470.668	18.500	639.615	639.637
P	19480.668	18.500	639.575	639.611
Q	19490.668	18.500	639.535	639.587
R	19500.668	18.500	639.495	639.557
S	19510.668	18.500	639.455	639.514
T	19520.668	18.500	639.415	639.472
U	19530.668	18.500	639.375	639.407
V	19540.668	18.500	639.335	639.342
℄ W BRG N A	19543.668	18.500	639.323	639.323
℄ E BRG N A	19545.374	18.812	639.311	639.311
W	19555.374	18.812	639.271	639.282
X	19565.374	18.812	639.2[illegible]	639.246
Y	19575.374	18.812	639.191	639.199
℄ BRG N APP	19582.457	18.812	639.163	639.163
BK N APP	19583.718	18.812	639.158	639.158

BEAM 10 & GIRDER 10

LOCATION	STATION	OFFSET	Theoretical Grade Elevations	Theo. Grade Elevs. Adj. For Dead Load Deflection
BK S APP	19323.626	27.125	640.068	640.068
℄ BRG S APP	19324.887	27.125	640.063	640.063
A	19334.887	27.125	640.023	640.030
B	19344.887	27.125	639.983	639.991
C	19354.887	27.125	639.943	639.945
℄ W BRG S A	19357.387	27.125	639.933	639.933
℄ E BRG S A	19358.970	26.666	639.934	639.934
D	19368.970	26.666	639.894	639.919
E	19378.970	26.666	639.854	639.904
F	19388.970	26.666	639.814	639.873
G	19398.970	26.666	639.774	639.835
H	19408.970	26.666	639.734	639.791
J	19418.970	26.666	639.694	639.736
K	19428.970	26.666	639.654	639.680
L	19438.970	26.666	639.614	639.629
M	19448.970	26.666	639.574	639.578
℄ PIER	19451.970	26.666	639.562	639.562
N	19461.970	26.666	639.522	639.533
O	19471.970	26.666	639.482	639.505
P	19481.970	26.666	639.442	639.479
Q	19491.970	26.666	639.402	639.455
R	19501.970	26.666	639.362	639.424
S	19511.970	26.666	639.322	639.382
T	19521.970	26.666	639.282	639.339
U	19531.970	26.666	639.242	639.274
V	19541.970	26.666	639.202	639.210
℄ W BRG N A	19544.970	26.666	639.190	639.190
℄ E BRG N A	19546.699	27.125	639.176	639.176
W	19556.699	27.125	639.136	639.147
X	19566.699	27.125	639.096	639.111
Y	19576.699	27.125	639.056	639.064
℄ BRG N APP	19583.783	27.125	639.028	639.028
BK N APP	19585.043	27.125	639.023	639.023

BEAM 11 & GIRDER 11

LOCATION	STATION	OFFSET	Theoretical Grade Elevations	Theo. Grade Elevs. Adj. For Dead Load Deflection
BK S APP	19324.951	35.437	639.931	639.931
℄ BRG S APP	19326.212	35.437	639.926	639.926
A	19336.212	35.437	639.886	639.893
B	19346.212	35.437	639.846	639.854
C	19356.212	35.437	639.806	639.808
℄ W BRG S A	19358.712	35.437	639.796	639.796
℄ E BRG S A	19360.272	34.833	639.802	639.802
D	19370.272	34.833	639.762	639.786
E	19380.272	34.833	639.722	639.771
F	19390.272	34.833	639.682	639.740
G	19400.272	34.833	639.642	639.703
H	19410.272	34.833	639.602	639.659
J	19420.272	34.833	639.562	639.603
K	19430.272	34.833	639.522	639.547
L	19440.272	34.833	639.482	639.496
M	19450.272	34.833	639.442	639.445
℄ PIER	19453.272	34.833	639.430	639.430
N	19463.272	34.833	639.390	639.401
O	19473.272	34.833	639.350	639.372
P	19483.272	34.833	639.310	639.346
Q	19493.272	34.833	639.270	639.322
R	19503.272	34.833	639.230	639.291
S	19513.272	34.833	639.190	639.249
T	19523.272	34.833	639.150	639.206
U	19533.272	34.833	639.110	639.142
V	19543.272	34.833	639.070	639.077
℄ W BRG N A	19546.272	34.833	639.058	639.058
℄ E BRG N A	19548.024	35.437	639.039	639.039
W	19558.024	35.437	638.999	639.010
X	19568.024	35.437	638.959	638.974
Y	19578.024	35.437	638.919	638.927
℄ BRG N APP	19585.108	35.437	638.891	638.891
BK N APP	19586.368	35.437	638.886	638.886

C. L. CURTAIN WALL & GIRDER 12

LOCATION	STATION	OFFSET	Theoretical Grade Elevations	Theo. Grade Elevs. Adj. For Dead Load Deflection
BK S APP	19326.276	43.750	639.878	639.878
℄ BRG S APP	19327.537	43.750	639.748	639.748
A	19337.537	43.750	639.708	639.708
B	19347.537	43.750	639.668	639.668
C	19357.537	43.750	639.628	639.628
℄ W BRG S A	19360.037	43.750	639.618	639.618
℄ E BRG S A	19361.574	43.000	639.627	639.627
D	19371.574	43.000	639.587	639.612
E	19381.574	43.000	639.547	639.597
F	19391.574	43.000	639.507	639.566
G	19401.574	43.000	639.467	639.528
H	19411.574	43.000	639.427	639.484
J	19421.574	43.000	639.387	639.429
K	19431.574	43.000	639.347	639.373
L	19441.574	43.000	639.307	639.322
M	19451.574	43.000	639.267	639.271
℄ PIER	19454.574	43.000	639.255	639.255
N	19464.574	43.000	639.215	639.227
O	19474.574	43.000	639.175	639.198
P	19484.574	43.000	639.135	639.172
Q	19494.574	43.000	639.095	639.148
R	19504.574	43.000	639.055	639.117
S	19514.574	43.000	639.015	639.075
T	19524.574	43.000	638.975	639.032
U	19534.574	43.000	638.935	638.987
V	19544.574	43.000	638.895	638.903
℄ W BRG N A	19547.574	43.000	638.883	638.883
℄ E BRG N A	19549.349	43.750	638.861	638.861
W	19559.349	43.750	638.821	638.821
X	19569.349	43.750	638.781	638.781
Y	19579.349	43.750	638.741	638.741
℄ BRG N APP	19586.433	43.750	638.712	638.712
BK N APP	19587.693	43.750	638.832	638.832

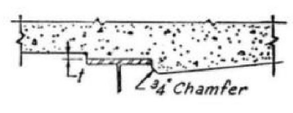

At Minimum Fillet

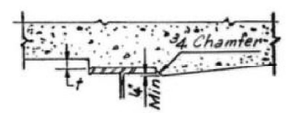

At Maximum Fillet

To determine "t": After all structural steel has been erected, elevations of the top flanges of the beams shall be taken at intervals shown in Plan. These elevations subtracted from the "Theoretical Grade Elevations Adjusted for Dead Load Deflection" shown in Tables minus slab thickness, equals the fillet heights "t" above top flange of beams.

FILLET HEIGHTS

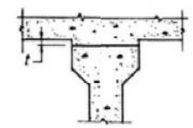

To determine "t": After all precast prestressed beams have been erected, elevations of the top flanges of the beams shall be taken at intervals shown in Plan. These elevations subtracted algebraically from the "Theoretical Grade Elevations Adjusted for Dead Load Deflections" shown in Tables, minus slab thickness, equals the fillet "t". A positive value of "t" equals the fillet height above the top of the beam. A negative value of "t", not to exceed 1/2", equals the embedment of the beam above the theoretical bottom of slab elevations.

FILLET HEIGHTS

Note
For Plan, Note "X" and other Details see Sheet 9

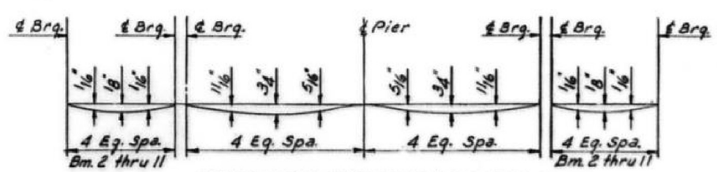

DEAD LOAD DEFECTION DIAGRAM
(Includes weight of concrete only)

Note: The above deflections are not to be used in the field if the engineer is working from the grade elevations adjusted for dead load deflections as shown above.

STATE OF ILLINOIS
DIVISION OF HIGHWAYS
ELEVATIONS
HARMAN HIGHWAY (F.A.S. RT. 389)
OVER
F.A.I. ROUTE 474
STA.284+70.45
F.A.I. RT. 474 PEORIA COUNTY SECTION 72-3HB-4
CHRISTIAN-ROGE AND ASSOC. ENGINEERS
CHICAGO, ILLINOIS
SHEET 10 OF 17

DESIGNED BY A.J.C.
DRAWN BY A.J.C.
CHECKED BY A.T.

FOR INFORMATION ONLY

ROUTE NO.	SECTION	COUNTY	TOTAL SHEETS	SHEET NO.
F.A.I.-474	72-3HB-4	PEORIA	27	18
FED. ROAD DIV. NO. 7	ILLINOIS	PROJECT		

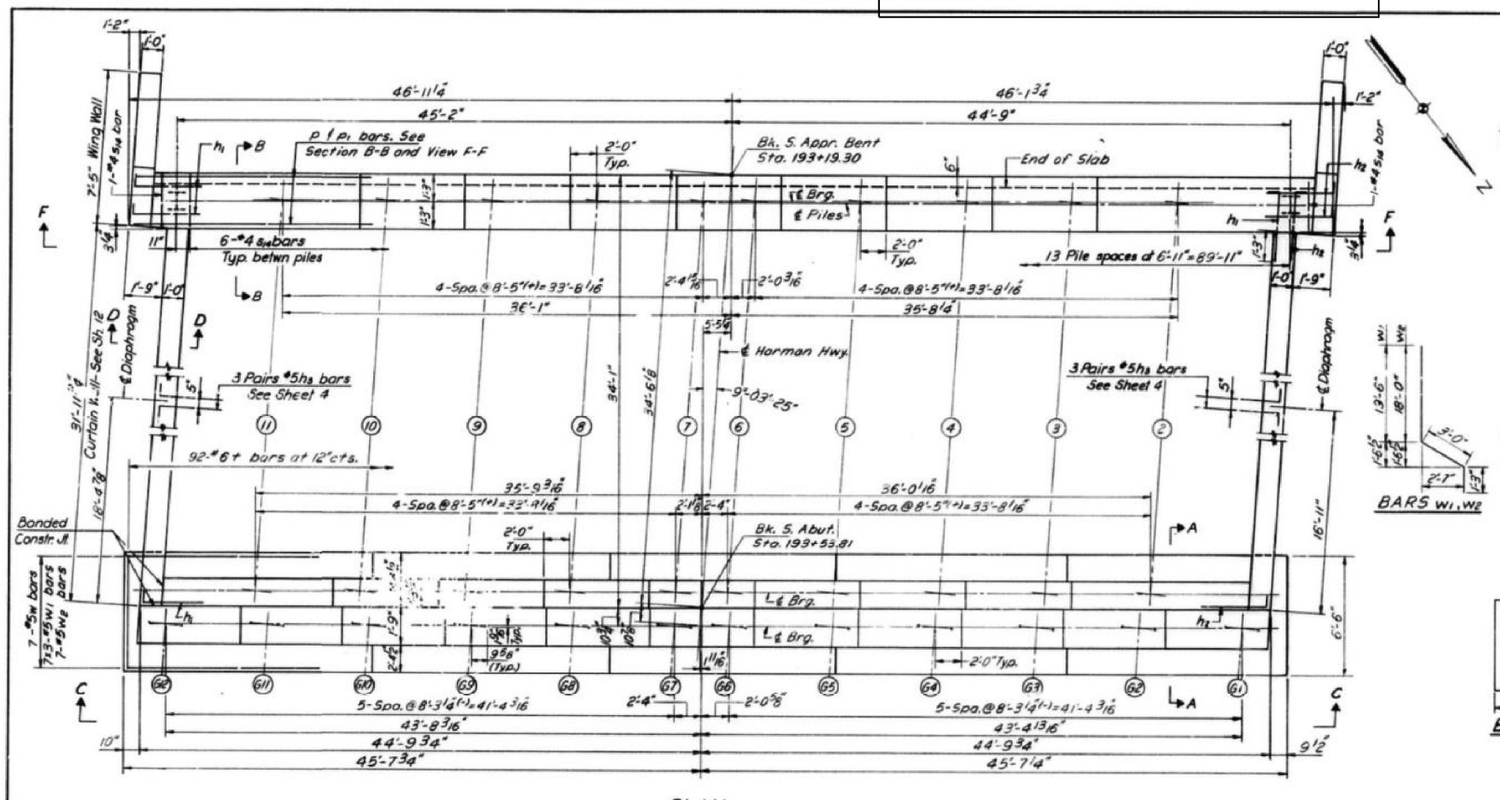

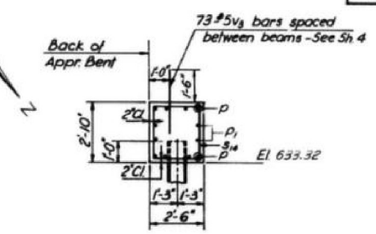

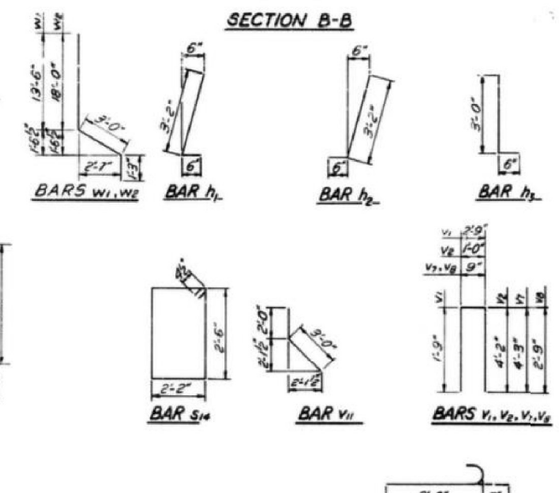

BILL OF MATERIAL

Bar	No.	Size	Length	Shape
h	177	#5	29'-7"	——
h₁	57	#5	3'-8"	L
h₂	77	#5	3'-8"	J
h₃	12	#5	3'-6"	L
h₄	26	#5	29'-9"	——
h₅	8	#5	25'-9"	——
h₆	4	#8	34'-10"	——
h₇	8	#10	33'-4"	——
h₈	40	#4	7'-1"	——
h₉	16	#5	16'-6"	——
h₁₀	16	#5	18'-0"	——
h₁₁	8	#10	8'-3"	——
h₁₂	6	#5	15'-9"	——
h₁₃	4	#5	11'-3"	——
h₁₄	6	#5	7'-6"	——
h₁₅	51	#5	22'-3"	——
n₄	192	#5	4'-1"	⊃
p	24	#7	32'-8"	——
p₁	16	#5	23'-9"	——
s₁₄	80	#4	10'-1"	□
t	92	#6	6'-2"	——
v	30	#5	30'-6"	——
v₁	90	#5	6'-3"	U
v₂	90	#5	9'-4"	U
v₃	154	#5	3'-0"	——
v₄	6	#5	26'-3"	——
v₅	50	#5	24'-8"	——
v₆	28	#5	5'-10"	——
v₇	10	#4	9'-6"	U
v₈	6	#4	6'-3"	U
v₉	32	#4	7'-0"	——
v₁₀	12	#5	18'-10"	——
v₁₁	90	#5	5'-0"	⊂
v₁₂	38	#5	28'-3"	——
v₁₃	36	#5	26'-0"	——
v₁₄	36	#5	23'-3"	——
v₁₅	40	#5	20'-5"	——
w	7	#5	19'-5"	——
w₁	21	#5	23'-9"	⊂
w₂	7	#5	22'-3"	⊂
Protective Coat			Sq. Yds.	7
Class X Concrete			Cu. Yds.	282.0
Reinforcement bars			Lbs.	24,200
Steel Piles 10BP42			Lin. Ft.	312*
Test Piles (Steel)			Each	1

*Test Pile not included

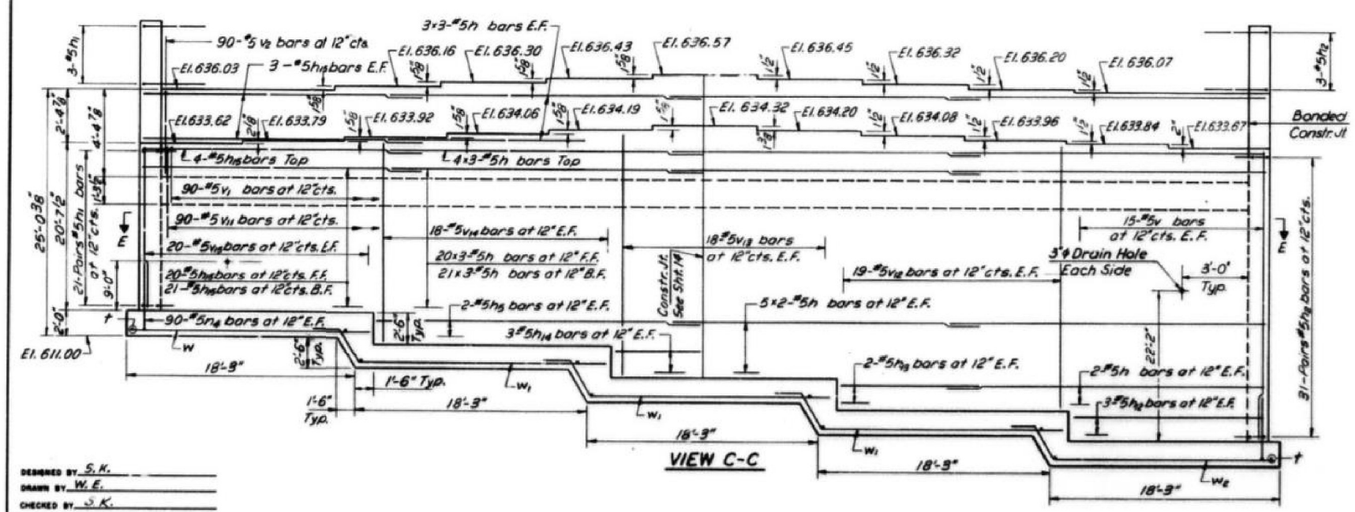

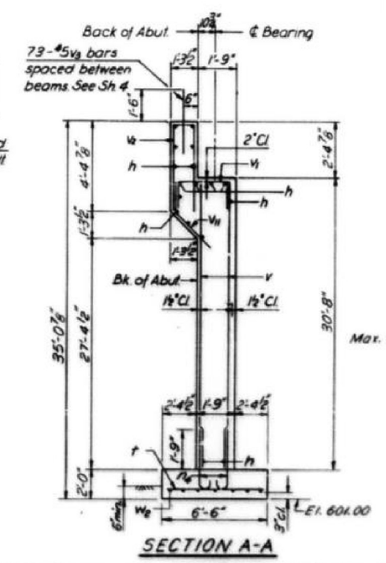

NOTES:
For Sections D-D, E-E and View F-F see Sht. 12.
Space Reinforcement bars in cap to miss anchor bolts.
Pour steps monolithically with cap.

Max. Brg. Pressure 2.0 Tons/□'

DESIGNED BY S.K.
DRAWN BY W.E.
CHECKED BY S.K.

STATE OF ILLINOIS
DIVISION OF HIGHWAYS
SOUTH ABUTMENT & APPROACH BENT
HARMAN HIGHWAY (F.A.S. RT. 389)
OVER
F.A.I. ROUTE 474
STA. 284+70.45
F.A.I. RT. 474 PEORIA COUNTY SECTION 72-3HB-4
CHRISTIAN-ROSE AND ASSOC. ENGINEERS
CHICAGO, ILLINOIS
SHEET 11 OF 17

MODEL: Default
FILE NAME: P:\Civil\ IDOT_DIST4\PTB 194-035 var PH I-II 3120032\WO 10 Airport Road Phase 2 3120032-10\CAD Sheets\bt468886-sh-exbridgeplans.dgn

The Upchurch Group
architects engineers surveyors
Professional Design Firm Corporation License No. 184-001601
123 North 15th Street Mattoon, IL 61938 Phone: 217.235.3177
e-mail: upchurchgroup@upchurchgroup.com

USER NAME = Sta42	DESIGNED - MJS	REVISED -	
TUG PROJECT NO. 3120032-10	DRAWN -	REVISED -	
PLOT SCALE = 100.0000 ' / in.	CHECKED - MJS	REVISED -	
PLOT DATE = 6/20/2023	DATE -	REVISED -	

STATE OF ILLINOIS
DEPARTMENT OF TRANSPORTATION

EXISTING STRUCTURE PLANS
AIRPORT ROAD OVER I-474

SCALE: 100.0000 ' / in. SHEET OF SHEETS STA. TO STA.

F.A.I. RTE.	SECTION	COUNTY	TOTAL SHEETS	SHEET NO.
474	(72-3HB-4)BR	PEORIA	175	129
		CONTRACT NO. 68886		
		ILLINOIS	FED. AID PROJECT	

FOR INFORMATION ONLY

ROUTE NO.	SECTION	COUNTY	TOTAL SHEETS	SHEET NO.
F.A.I.-474	72-3HB-4	PEORIA	27	19
FED. ROAD DIV. NO. 7		ILLINOIS	PROJECT	

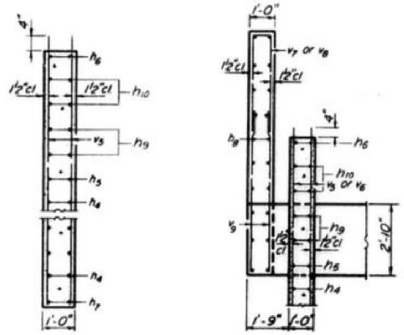

SECTION A-A

SECTION D-D

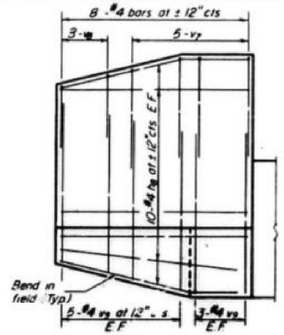

WING WALL REINFORCEMENT

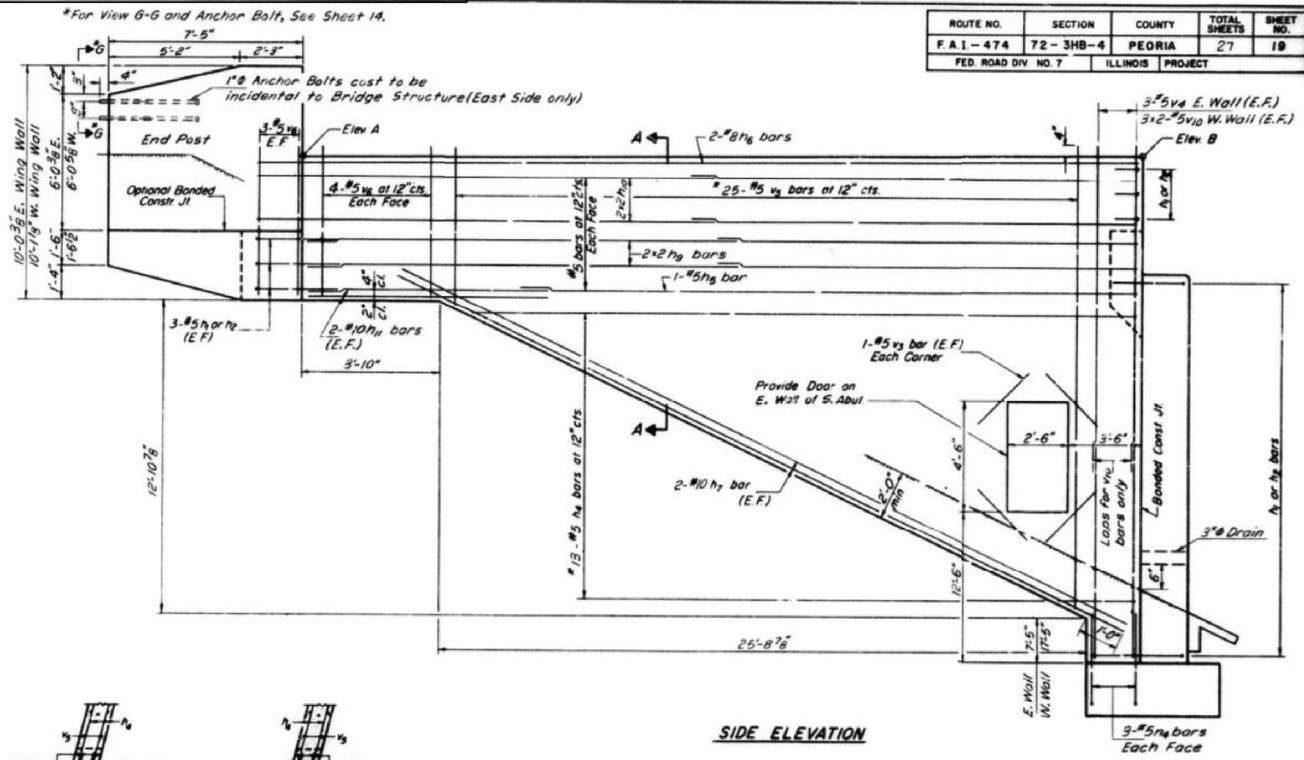

SIDE ELEVATION

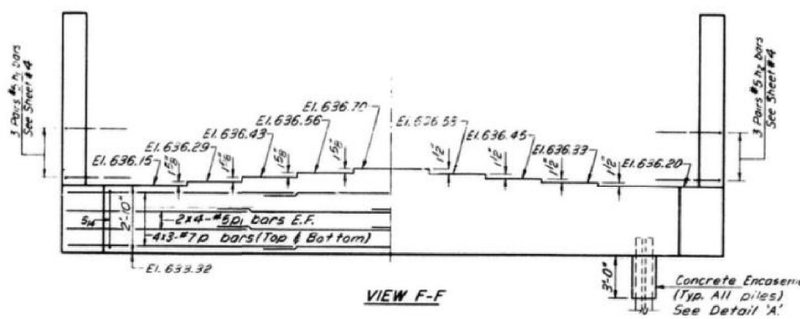

VIEW F-F

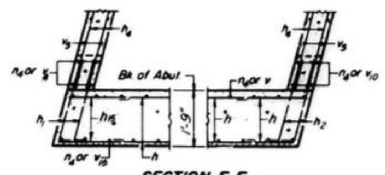

SECTION E-E

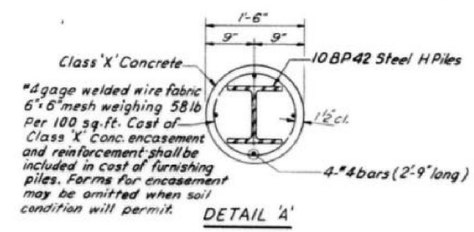

*4 gage welded wire fabric 6"×6" mesh weighing 58 lb per 100 sq. ft. Cost of Class 'X' Conc. encasement and reinforcement shall be included in cost of furnishing piles. Forms for encasement may be omitted when soil condition will permit.

DETAIL 'A'

TOP OF CURTAIN WALL ELEVATIONS

Location	Elev. A	Elev. B
W. Wall S. Abut.	639.00	638.87
E. Wall S. Abut.	638.94	638.81

2"ϕ Galv. Conduit (Sch. 40 Pipe) Extend to clear end of wing wall and terminate at a point outside of the shoulder. Thread and cap each end. Place conduit at all four corners of bridge. (4 Required.) Cost incidental

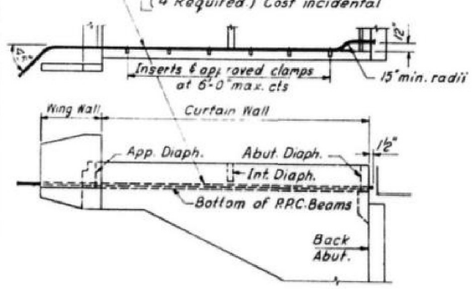

ELECTRICAL CONDUIT LOCATION

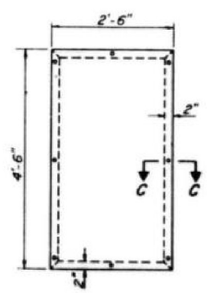

DOOR ELEVATION

(Cost of door and frame are incidental)

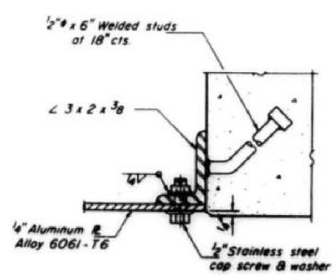

SECTION C-C

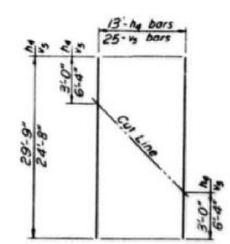

FIELD CUTTING DIAGRAM

* Order h_4 & v_5 bars full length. Cut to fit as shown and use remainder of bars in other face

APPR. BENT - PILE DATA

Type - 10BP42 Steel H Piles
Capacity - Drive to Refusal
Est. Length - 24'
No. Req'd. - 13*
Test Piles - 1
*Does not include test pile

DESIGNED BY S.K.
DRAWN BY W.E.
CHECKED BY S.K.

STATE OF ILLINOIS
DIVISION OF HIGHWAYS
SOUTH END CURTAIN WALLS & WING WALLS
HARMAN HIGHWAY (F.A.S. RT. 389)
OVER
F.A.I. ROUTE 474
STA. 284+70.45
F.A.I. RT. 474 PEORIA COUNTY SECTION 72-3HB-4

CHRISTIAN-ROGE AND ASSOC. ENGINEERS
CHICAGO, ILLINOIS

SHEET 12 OF 17

MODEL: Default
FILE NAME: P:\Civil_IDOT_DIST4\PTB_194-035_var PH III\3120032\WO 10 Airport Road Phase 2 3120032-10\CAD Sheets\D468886-sht-exbridgeplans.dgn

The Upchurch Group
architects engineers surveyors
Professional Design Firm Corporation License No.: 184-001401
123 North 15th Street Mattoon, IL 61938 Phone: 217.235.3177
e-mail: upchurchgroup@upchurchgroup.com

USER NAME = Sta42	DESIGNED - MJS	REVISED -	
TUG PROJECT NO. 3120032-10	DRAWN -	REVISED -	
PLOT SCALE = 100.0000 ' / in.	CHECKED - MJS	REVISED -	
PLOT DATE = 6/20/2023	DATE -	REVISED -	

STATE OF ILLINOIS
DEPARTMENT OF TRANSPORTATION

EXISTING STRUCTURE PLANS
AIRPORT ROAD OVER I-474

SCALE: 100.0000 ' / in. SHEET OF SHEETS STA. TO STA.

F.A.I. RTE.	SECTION	COUNTY	TOTAL SHEETS	SHEET NO.
474	(72-3HB-4)BR	PEORIA	175	130
		CONTRACT NO. 68886		
		ILLINOIS	FED. AID PROJECT	

FOR INFORMATION ONLY

ROUTE NO.	SECTION	COUNTY	TOTAL SHEETS	SHEET NO.
F.A.I.-474	72-3HB-4	PEORIA	27	20
FED. ROAD DIV. NO. 7	ILLINOIS	PROJECT		

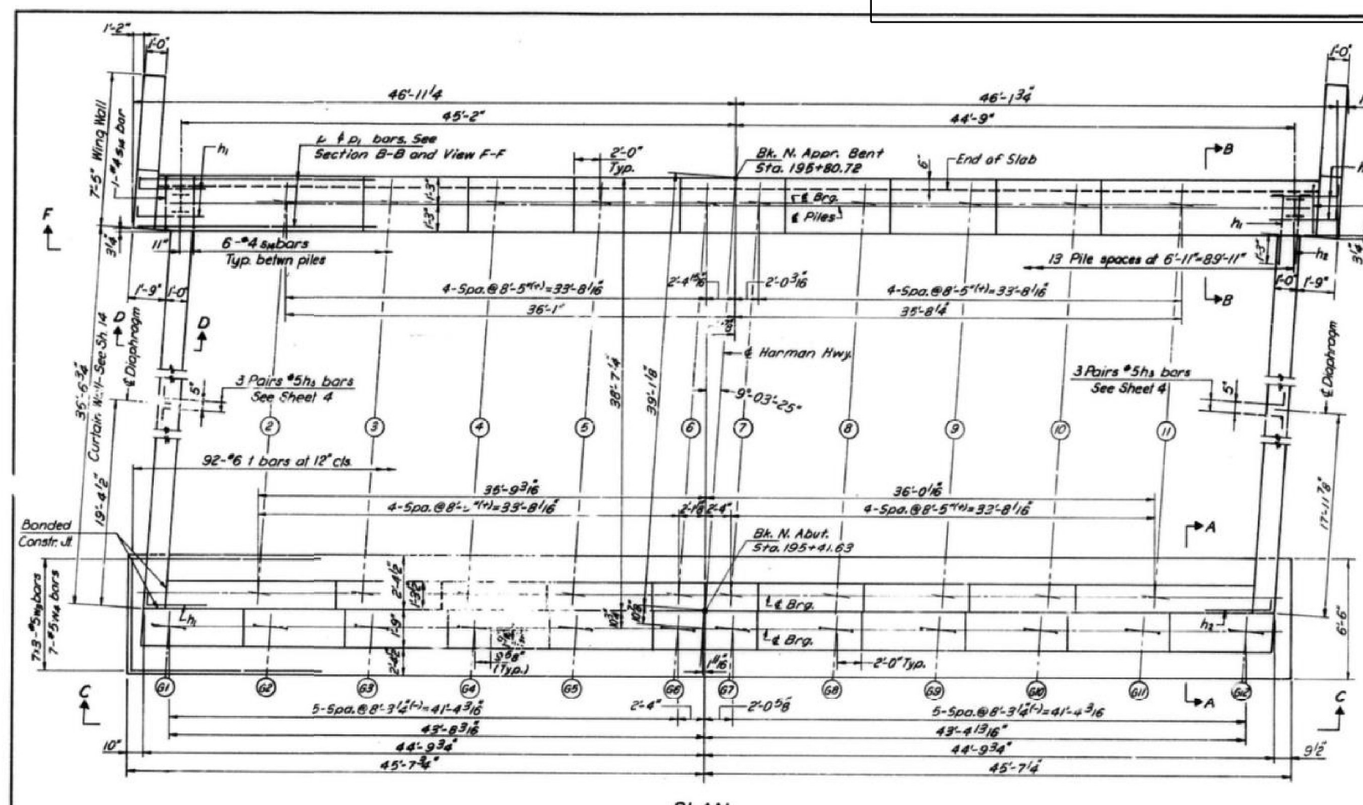

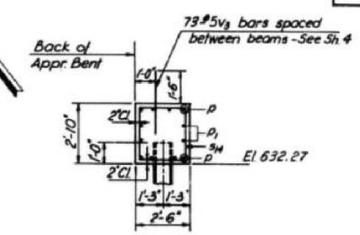

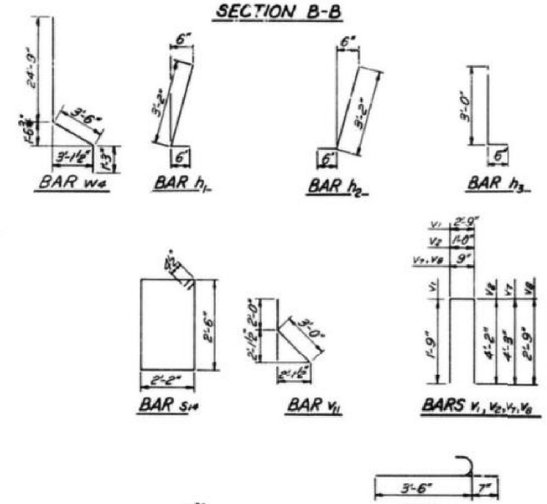

BILL OF MATERIAL

Bar	No.	Size	Length	Shape
h	177	#5	23'-7"	—
h1	69	#5	3'-8"	L
h2	63	#5	3'-8"	J
h3	12	#5	3'-6"	L
h8	40	#4	7'-1"	—
h11	8	#10	8'-3"	—
h16	63	#5	22'-3"	—
h16	4	#8	38'-5"	—
h17	16	#5	19'-10"	—
h18	16	#5	18'-9"	—
h19	4	#5	29'-3"	—
h20	8	#10	37'-5"	—
h21	30	#5	33'-11"	—
n4	192	#5	4'-1"	⊃
p	24	#7	32'-8"	—
p1	16	#5	23'-9"	—
S14	80	#5	10'-1"	▢
t	92	#6	6'-2"	—
v1	90	#5	6'-3"	⊓
v2	90	#5	9'-4"	⊓
v3	154	#5	3'-0"	—
v6	32	#5	5'-10"	—
v7	10	#4	9'-6"	⊓
v8	6	#4	6'-3"	⊓
v9	32	#4	7'-0"	—
v11	90	#5	5'-0"	⊂
v16	90	#5	26'-9"	—
v17	90	#5	29'-8"	—
v18	6	#5	29'-6"	—
v19	6	#5	32'-6"	—
v20	58	#5	27'-3"	—
w3	21	#5	23'-4"	—
w4	7	#5	29'-6"	—
Protective Coat			Sq. Yds.	7
Class X Concrete			Cu. Yds.	284.1
Reinforcement bars			Lbs.	25,240
Steel Piles 10BP42			Lin. Ft.	351 *
Test Piles (Steel)			Each	1

*Test Pile not included

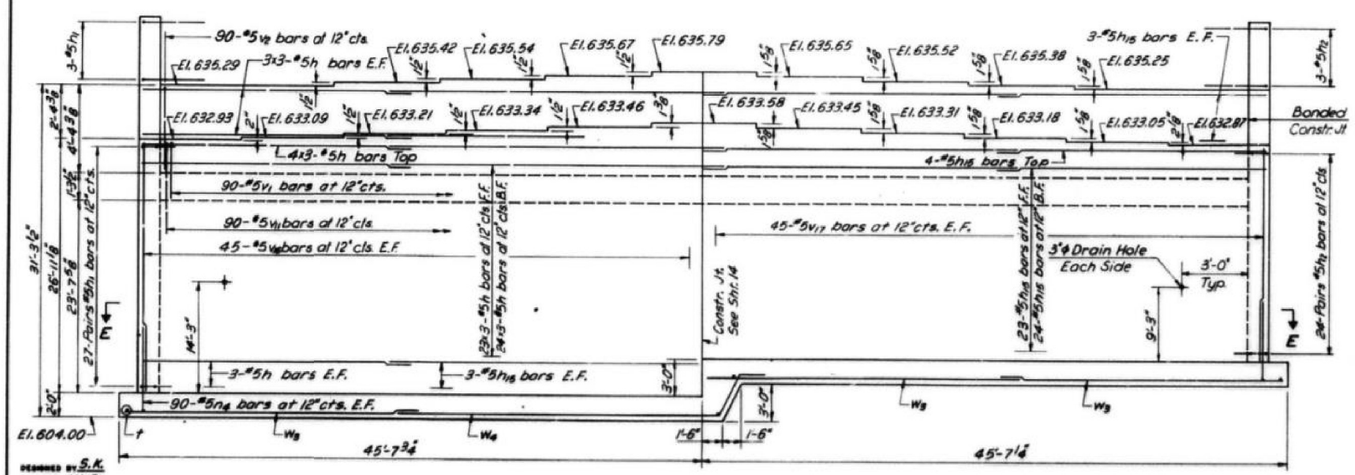

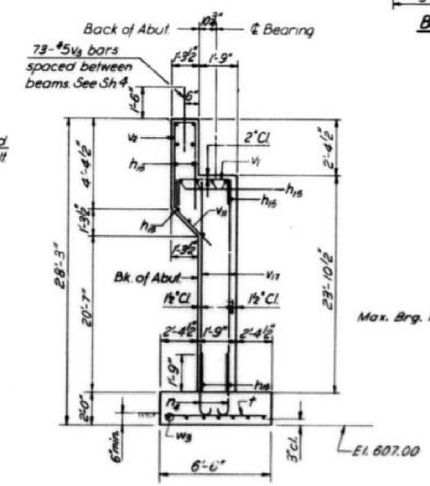

Max. Brg. Pressure 2.0 Tons/□'

NOTES:
For Sections D-D, E-E and View F-F see Sheet 14.
For other notes see Sheet 11.

STATE OF ILLINOIS
DIVISION OF HIGHWAYS
NORTH ABUTMENT & APPROACH BENT
HARMAN HIGHWAY (F.A.S. RT. 389)
OVER
F.A.I. ROUTE 474
STA. 284+70.45
F.A.I. RT. 474 PEORIA COUNTY SECTION 72-3HB-4
CHRISTIAN-BOOKE AND ASSOC. ENGINEERS
CHICAGO, ILLINOIS
SHEET 13 OF 17

DESIGNED BY S.K.
DRAWN BY W.E.
CHECKED BY S.K.

MODEL: Default
FILE NAME: P:\Civil\ IDOT_DIST4\PTB 194-035 var PH 1-II 3120032\WO 10 Airport Road Phase 2 3120032-10\CAD Sheets\bA68886-sh-exbridgeplans.dgn

The Upchurch Group
architects engineers surveyors
Professional Design Firms Corporation License No. 184-001601
123 North 15th Street Mattoon, IL 61938 Phone: 217.235.3177
e-mail: upchurchgroup@upchurchgroup.com

USER NAME = Sta42	DESIGNED - MJS	REVISED -	
TUG PROJECT NO. 3120032-10	DRAWN -	REVISED -	
PLOT SCALE = 100.0000 ' / in.	CHECKED - MJS	REVISED -	
PLOT DATE = 6/20/2023	DATE -	REVISED -	

STATE OF ILLINOIS
DEPARTMENT OF TRANSPORTATION

EXISTING STRUCTURE PLANS
AIRPORT ROAD OVER I-474

SCALE: 100.0000 ' / in. SHEET OF SHEETS STA. TO STA.

F.A.I. RTE.	SECTION	COUNTY	TOTAL SHEETS	SHEET NO.
474	(72-3HB-4)BR	PEORIA	175	131
		CONTRACT NO. 68886		
		ILLINOIS	FED. AID PROJECT	

FOR INFORMATION ONLY

ROUTE NO.	SECTION	COUNTY	TOTAL SHEETS	SHEET NO.
F.A.I.-474	72-3HB-4	PEORIA	27	21
FED. ROAD DIV. NO. 7		ILLINOIS	PROJECT	

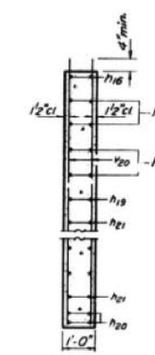

SECTION A-A

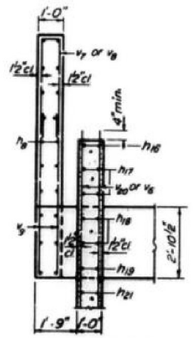

SECTION D-D

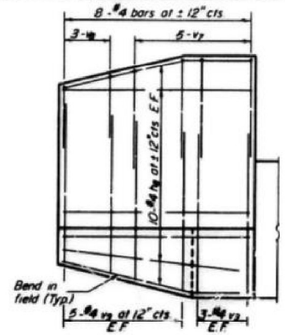

WING WALL REINFORCEMENT

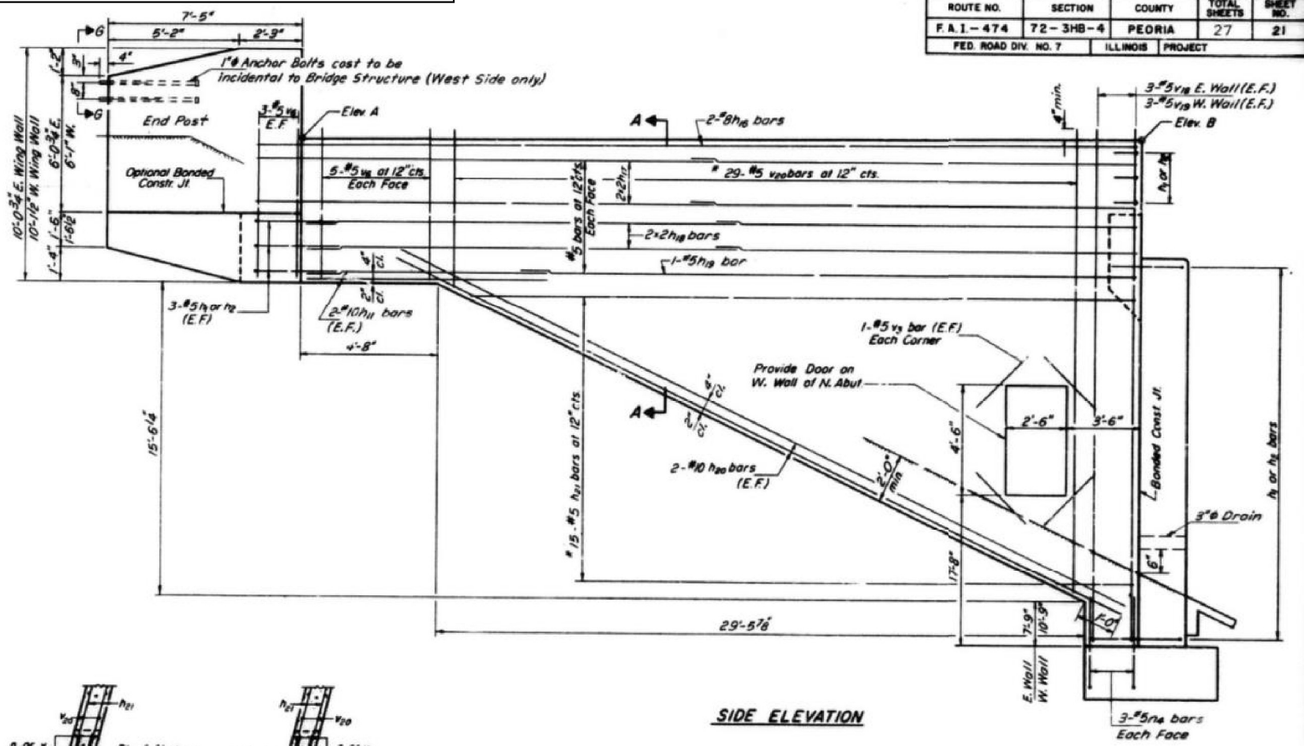

SIDE ELEVATION

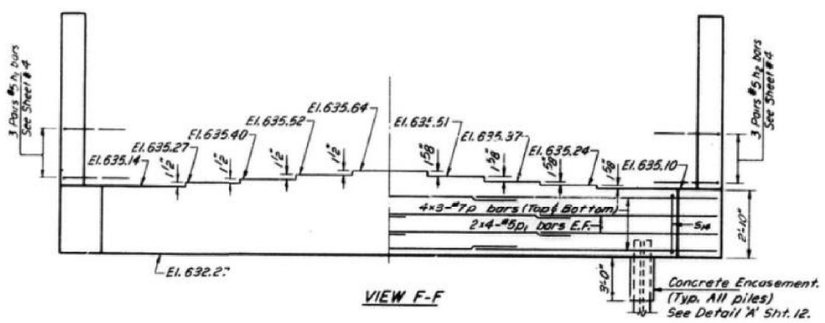

VIEW F-F

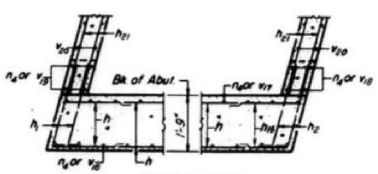

SECTION E-E

TOP OF CURTAIN WALL* ELEVATIONS

Location	Elev. A	Elev. B
E. Wall N. Abut.	697.92	698.06
W. Wall N. Abut.	697.97	698.12

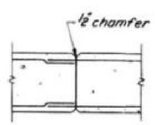

CONSTRUCTION JOINT DETAIL

APPR. BENT - PILE DATA

Type - 10BP42 Steel H Piles
Capacity - Drive to Refusal
Est. Length - 27'
No. Req'd. - 13*
Test Piles - 1
*Does not include test pile

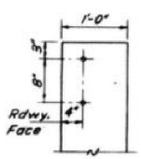

VIEW G-G

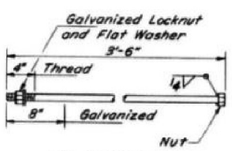

1"ø ANCHOR BOLT

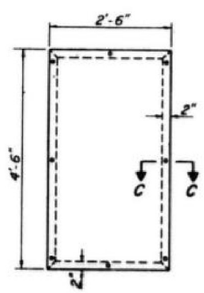

DOOR ELEVATION
(Cost of door and frame are incidental)

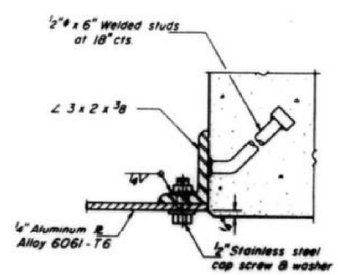

SECTION C-C

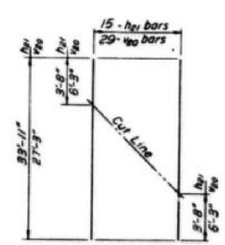

FIELD CUTTING DIAGRAM

* Order h₂₁ & v₁₆ bars full length. Cut to fit as shown and use remainder of bars in other face

DESIGNED BY S.K.
DRAWN BY W.E.
CHECKED BY S.K.

STATE OF ILLINOIS
DIVISION OF HIGHWAYS
NORTH END CURTAIN WALLS & WING WALLS
HARMAN HIGHWAY (F.A.S. RT. 389)
OVER
F.A.I. ROUTE 474
STA. 284+70.45
F.A.I. RT. 474 PEORIA COUNTY SECTION 72-3HB-4
CHRISTIAN-ROGE AND ASSOC. ENGINEERS
CHICAGO, ILLINOIS
SHEET 14 OF 17

FOR INFORMATION ONLY

ROUTE NO.	SECTION	COUNTY	TOTAL SHEETS	SHEET NO.
F.A.I.-474	72-3HB-4	PEORIA	27	22
FED. ROAD DIV. NO. 7		ILLINOIS	PROJECT	

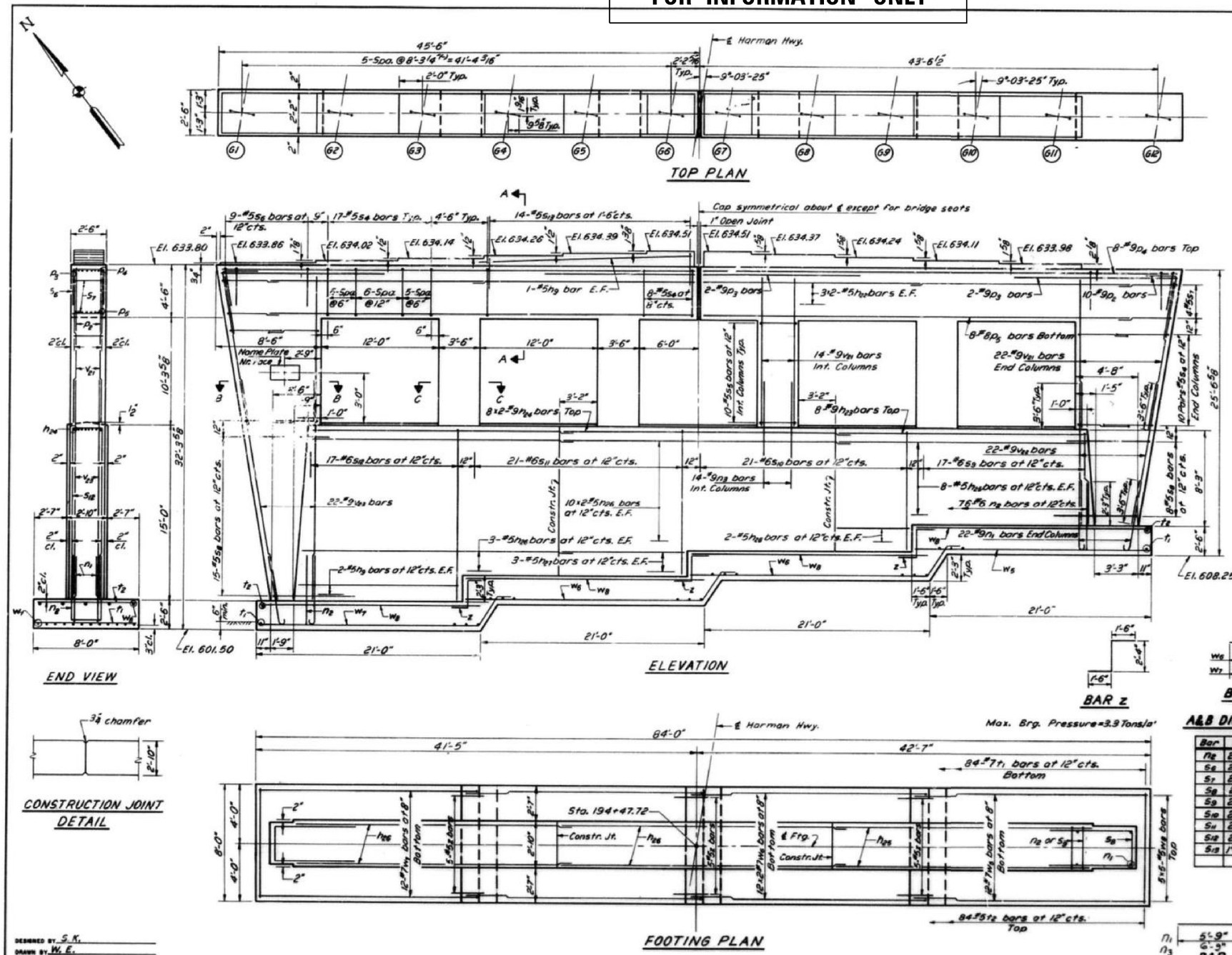

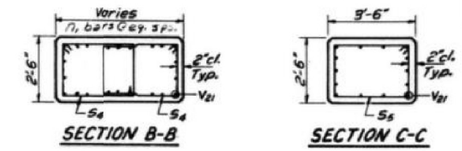

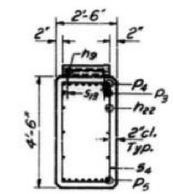

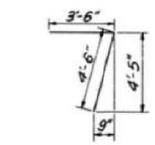

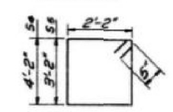

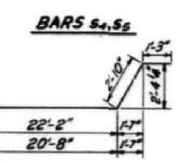

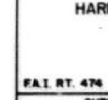

BILL OF MATERIAL

Bar	No.	Size	Length	Shape
h_{21}	8	#5	16'-6"	
h_{22}	24	#5	21'-0"	
h_{23}	8	#9	25'-2"	
h_{24}	16	#9	28'-9"	
h_{25}	16	#5	25'-2"	
h_{26}	46	#5	27'-3"	
h_{27}	6	#5	11'-7"	
h_{28}	4	#5	7'-3"	
n_1	44	#9	7'-0"	
n_2	76	#6	11'-6"	
n_3	56	#9	8'-0"	
p_2	20	#9	8'-0"	
p_3	8	#9	14'-4"	
p_4	16	#9	45'-2"	
p_5	16	#8	41'-4"	
s_4	124	#5	13'-6"	
s_5	40	#5	11'-6"	
s_6	18	#5	6'-2"	
s_7	8	#5	13'-2"	
s_8	23	#5	14'-8"	
s_9	17	#6	18'-8"	
s_{10}	21	#6	23'-2"	
s_{11}	21	#6	27'-8"	
s_{12}	17	#6	32'-2"	
s_{13}	28	#5	5'-4"	
t_1	84	#7	7'-8"	
t_2	84	#5	7'-8"	
v_{21}	100	#9	14'-0"	
v_{22}	22	#9	11'-9"	
v_{23}	22	#9	18'-6"	
w_6	12	#7	22'-2"	
w_6	24	#7	26'-3"	
w_7	12	#7	24'-9"	
w_8	20	#5	22'-2"	
z	15	#5	5'-4"	
Class X Concrete			Cu.Yds.	294.2
Reinforcement bars			Lbs.	31,840
Name Plate			Ea.	1

A&B DIMENSIONS

Bar	A	B
n_2	2'-6"	4'-6"
s_6	2'-2"	2'-0"
s_7	2'-2"	5'-6"
s_8	2'-2"	6'-3"
s_9	2'-6"	8'-1"
s_{10}	2'-6"	10'-4"
s_{11}	2'-6"	12'-7"
s_{12}	2'-6"	14'-10"
s_{13}	1'-10"	1'-9"

NOTES:
Space reinforcement in cap to miss anchor bolts.
All edges shall have standard ¾" chamfers except as noted.
Pour steps monolithically with cap.

STATE OF ILLINOIS
DIVISION OF HIGHWAYS
PIER
HARMAN HIGHWAY (F.A.S. RT. 389)
OVER
F.A.I. ROUTE 474
STA. 284+70.45
F.A.I. RT. 474 PEORIA COUNTY SECTION 72-3HB-4

CHRISTIAN-ROSE AND ASSOC. ENGINEERS
CHICAGO, ILLINOIS

SHEET 15 OF 17

DESIGNED BY S.K.
DRAWN BY W.E.
CHECKED BY S.K.

MODEL: Default
FILE NAME: P:\Civil\ IDOT DIST4\PTB 194-035 var PH I-II 3120032\WO 10 Airport Road Phase 2 3120032-10\CAD Sheets\0468886-sht-exbridgeplans.dgn

The Upchurch Group
architects engineers surveyors
Professional Design Firm Corporation License No. 184-003401
123 North 15th Street Mattoon, IL 61938
Phone: 217.235.3177
e-mail: upchurchgroup@upchurchgroup.com

USER NAME = Sta42	DESIGNED - MJS	REVISED -	
TUG PROJECT NO. 3120032-10	DRAWN -	REVISED -	
PLOT SCALE = 100.0000 ' / in.	CHECKED - MJS	REVISED -	
PLOT DATE = 6/20/2023	DATE -	REVISED -	

STATE OF ILLINOIS
DEPARTMENT OF TRANSPORTATION

EXISTING STRUCTURE PLANS
AIRPORT ROAD OVER I-474

SCALE: 100.0000 ' / in. SHEET OF SHEETS STA. TO STA.

F.A.I. RTE.	SECTION	COUNTY	TOTAL SHEETS	SHEET NO.
474	(72-3HB-4)BR	PEORIA	175	133
		CONTRACT NO. 68886		
	ILLINOIS	FED. AID PROJECT		

FOR INFORMATION ONLY

ROUTE NO.	SECTION	COUNTY	TOTAL SHEETS	SHEET NO.
F.A.I.-474	72-3HB-4	PEORIA	27	23
FED. ROAD DIV. NO. 7	ILLINOIS	PROJECT		

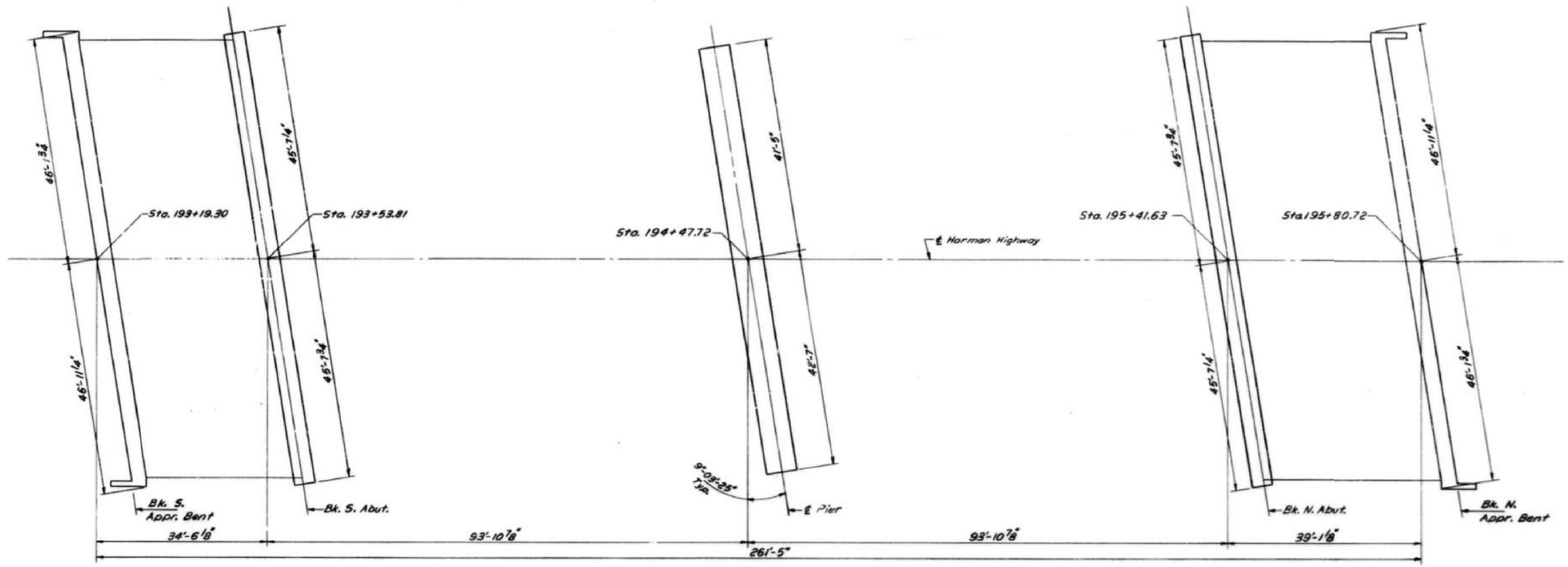

FOOTING LAYOUT

DESIGNED BY
DRAWN BY W.E.
CHECKED BY

STATE OF ILLINOIS
DIVISION OF HIGHWAYS
FOOTING LAYOUT
HARMAN HIGHWAY (F.A.S. RT. 389)
OVER
F.A.I. ROUTE 474
STA. 284+70.45
F.A.I. RT. 474 PEORIA COUNTY SECTION 72-3HB-4
CHRISTIAN-ROSE AND ASSOC. ENGINEERS
CHICAGO, ILLINOIS
SHEET 16 OF 17

MODEL: Default
FILE NAME: P:\Civil_IDOT_DIST4\PTB 194-035 var PH I-II\3120032\WO 10 Airport Road Phase 2 3120032-10\CAD Sheets\B468886-sht-exbridgeplans.dgn

The Upchurch Group
architects engineers surveyors
Professional Design Firm Corporation
License No. 184-001401
123 North 15th Street
Mattoon, IL 61938
Phone: 217.235.3177
e-mail: upchurchgroup@upchurchgroup.com

USER NAME = Sta42	DESIGNED - MJS	REVISED -
TUG PROJECT NO. 3120032-10	DRAWN -	REVISED -
PLOT SCALE = 100.0000 ' / in.	CHECKED - MJS	REVISED -
PLOT DATE = 6/20/2023	DATE -	REVISED -

STATE OF ILLINOIS
DEPARTMENT OF TRANSPORTATION

EXISTING STRUCTURE PLANS
AIRPORT ROAD OVER I-474

SCALE: 100.0000 ' / in. SHEET OF SHEETS STA. TO STA.

F.A.I. RTE.	SECTION	COUNTY	TOTAL SHEETS	SHEET NO.
474	(72-3HB-4)BR	PEORIA	175	134
		CONTRACT NO. 68886		
		ILLINOIS	FED. AID PROJECT	

FOR INFORMATION ONLY

ROUTE NO.	SECTION	COUNTY	TOTAL SHEETS	SHEET NO.
F.A.I.-474	72-3HB-4	PEORIA	27	24
FED. ROAD DIV. NO. 7	ILLINOIS	PROJECT		

Boring No. 1
Station 193+17
Offset 39' RT ℄

Elevation	N	Qu t/s.f.	w (%)
Ground Surface 633.5 0			
BROWN MOIST SILTY CLAY			
630.5	17	1.1 S	-
LIGHT BROWN AND GRAY DAMP SILTY LOAM			
-5 628.0	7	0.6 S	-
LIGHT BROWN AND GRAY MOIST SILTY LOAM			
625.5	9	0.5 S	-
BROWN MOIST SILTY LOAM			
-10 623.0	8	0.8 S	-
LIGHT BROWN AND GRAY MOIST SILTY CLAY LOAM			
620.5	7	1.0 S	-
LIGHT BROWN AND GRAY MOIST SILTY CLAY			
-15 618.0	10	1.2 S	-
LIGHT BROWN AND GRAY MOIST CLAY			
615.5	14	1.2 S	-
LIGHT BROWN AND GRAY DAMP CLAY LOAM TRACE OF SOFT SANDSTONE			
-20 613.0	70	-	-
LIGHT BROWN AND GRAY DAMP SANDSTONE TRACE OF CLAY			
	50/5"	-	-
-25	50/4"	-	-
605.5			
END OF BORING			
-30			

Boring No. 2
Station 193+59
Offset 40' LT ℄

Elevation	N	Qu t/s.f.	w (%)
Ground Surface 640.6 0			
BROWN MOIST SILTY CLAY			
	13	2.5 S	21
-5	9	1.7 S	21
632.6	26	2.6 S	-
LIGHT BROWN MOIST SILT LOAM			
-10	8	1.8 S	-
	6	-	16
-15 625.1	11	0.8 S	25
LIGHT BROWN MOIST TO WET SILTY CLAY LOAM			
	11	0.8 S	26
-20 620.1	6	0.8 S	28
LIGHT BROWN MOIST SILTY CLAY 617.6	6	1.0 S	23
GRAY TO BROWN AND GRAY MOIST CLAY (WET LAYER @ 28') -25	13	2.7 S	20
	16	2.5 S	-
610.6 -30	32	1.4 S	-
BROWN AND GRAY SDY LOAM			
608.6			
BROWN AND GRAY CLAY LOAM	50	-	15
-35	50	-	-
603.1			
GRAY SAND STONE 602.6	50	1.6/S	11
END OF BORING			
-40			

Boring No. 3
Station 194+43
Offset 39' RT ℄

Elevation	N	Qu t/s.f.	w (%)
Ground Surface 623.5 0			
LIGHT BROWN MOIST SILTY CLAY			
620.5	10	1.0 S	-
BROWN AND GRAY MOIST SILTY LOAM			
-5 618.5	10	0.6 S	-
BROWN AND GRAY MOIST SILTY CLAY LOAM			
615.5	15	1.0 S	-
BROWN AND GRAY MOIST CLAY TRACE OF SAND			
-10 613.0	17	2.7 S	-
LIGHT BROWN AND GRAY DAMP SHALEY CLAY LOAM AND SANDSTONE			
	50/6"	-	-
-15	50/6"	-	-
605.5	50/2"	-	-
END OF BORING			
-20			

Boring No. 4
Station 195+47
Offset 40' LT ℄

Elevation	N	Qu t/s.f.	w (%)
Ground Surface 634.0 0			
BROWN MOIST SILTY CLAY			
	11	1.1 S	-
-5 628.5	8	0.8 S	-
BROWN WET SILTY CLAY LOAM			
	-	0.2 S	-
-10 623.5	4	0.1 S	-
BROWN DAMP AND MOIST SILT LOAM			
	8	0.8 S	-
-15	7	1.0 S	-
616.0	12	1.2 S	-
LIGHT BROWN MOIST SILTY CLAY			
-20 613.5	7	1.8 S	
LIGHT BROWN AND GRAY CLAY 611.0	16	3.3 S	-
LIGHT BROWN AND GRAY MOIST CLAY LOAM -25 608.5	3	2.6 S	-
LIGHT BROWN AND GRAY MOIST SANDY LOAM			
606.0	100	-	-
BROWN AND GRAY SANDSTONE			
-30	50/2"	-	-
601.0	50/4"	-	-
END OF BORING			
-35			

Boring No. 5
Station 195+72
Offset 38' RT ℄

Elevation	N	Qu t/s.f.	w (%)
Ground Surface 614.5 0			
BROWN MOIST CLAY LOAM			
611.5	18	2.6 S	
LIGHT BROWN AND GRAY DAMP CLAY LOAM TRACE OF SANDSTONE			
-5 609.0	38	-	
LIGHT BROWN AND GRAY DAMP SHALEY CLAY LOAM AND SANDSTONE			
	50/3"	-	
-10 601.0	50/2"	-	-
BROWN DAMP SANDSTONE			
	50/2"	-	-
-15 599.0	50/1"	-	-
GRAY DAMP SANDSTONE			
	50/4"	-	-
-20 594.0	50/2"	-	
END OF BORING			

N - Standard Penetration Test - Blows per foot to drive 2" O.D. Split Spoon Sampler 12" with 140# hammer falling 30".

Qu - Unconfined Compressive Strength - t/sf

w - Water Content - percentage of oven dry weight - %.

Type failure:
B - Bulge Failure
S - Shear Failure
E - Estimated Value
P - Penetrometer

DESIGNED BY _____
DRAWN BY _____
CHECKED BY _____

STATE OF ILLINOIS
DIVISION OF HIGHWAYS
BORING LOGS
HARMAN HIGHWAY (F.A.S. RT. 389)
OVER
F.A.I. ROUTE 474
STA. 284+70.45
F.A.I. RT. 474 PEORIA COUNTY SECTION 72-3HB-4

CHRISTIAN-ROGE AND ASSOC. ENGINEERS
CHICAGO, ILLINOIS

SHEET 17 OF 17

MODEL: Default
FILE NAME: P:\Civil\ IDOT DISTA\PTB 194-035 var PH I-II 3120032\WO 10 Airport Road Phase 2 3120032-10\CAD Sheets\D468886-sht-exbridgeplans.dgn

The Upchurch Group
architects engineers surveyors
Professional Design Firm Corporation License No. 184-003001
e-mail: upchurchgroup@upchurchgroup.com
123 North 15th Street Mattoon, IL 61938 Phone: 217.235.3177

USER NAME = Sta42	DESIGNED - MJS	REVISED -	
TUG PROJECT NO. 3120032-10	DRAWN -	REVISED -	
PLOT SCALE = 100.0000 ' / in.	CHECKED - MJS	REVISED -	
PLOT DATE = 6/20/2023	DATE -	REVISED -	

STATE OF ILLINOIS
DEPARTMENT OF TRANSPORTATION

EXISTING STRUCTURE PLANS
AIRPORT ROAD OVER I-474

SCALE: 100.0000 ' / in. SHEET OF SHEETS STA. TO STA.

F.A.I. RTE.	SECTION	COUNTY	TOTAL SHEETS	SHEET NO.
474	(72-3HB-4)BR	PEORIA	175	135
		CONTRACT NO. 68886		
	ILLINOIS	FED. AID PROJECT		

SLOPE STEPS DETAIL

TYPICAL CROSS-SECTION EMBANKMENT
CONSTRUCTION ON SIDEHILL

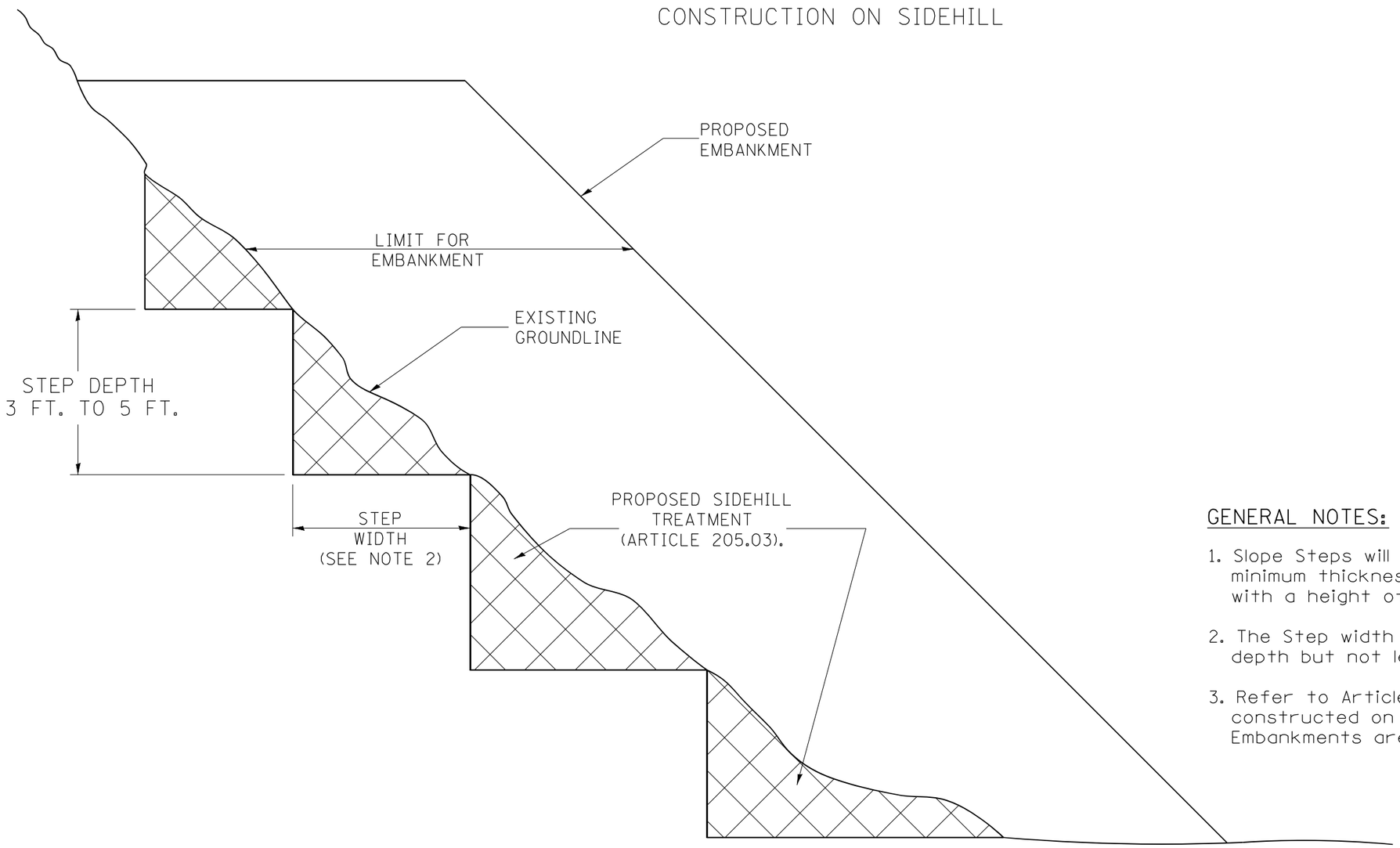

GENERAL NOTES:

1. Slope Steps will be required for all 12(300) minimum thickness "sliver fills" and on all fills with a height of 10 feet or greater.
2. The Step width shall be twice the Step depth but not less than 6 feet.
3. Refer to Article 205.03 for Embankment to be constructed on Hillside or Slopes, or if existing Embankments are to be widened.

REPLACEMENT MATERIAL:

STANDARD EMBANKMENT
(IN ACCORDANCE WITH
205 OF THE STANDARD SPECIFACATION).

All dimensions are in inches (millimeters) unless otherwise noted.

DESIGNER NOTE:

1. EACH PROJECT SHOULD BE REVIEWED INDEPENDENTLY FOR TREATMENT REQUIRED.
2. REFER TO THIS DETAIL WITH NOTE ON APPLICABLE TYPICAL SECTIONS.

MODEL: Default
FILE NAME: P:\Civil\ IDOT OBS4\PB 194-035 var PH I\II 3120032\WO 10 Airport Road Phase 2 3120032-10\CAD Sheets\0468886-sht-cndb.dgn

The Upchurch Group
architects engineers surveyors
Professional Design Firm Corporation
License No. 184-003-001
e-mail: upchurchgroup@upchurchgroup.com
123 North 15th Street
Mattoon, IL 61938
Phone: 217.235.3177

USER NAME = Sta42	DESIGNED - MJS	REVISED -
TUG PROJECT NO. 3120032-10	DRAWN -	REVISED -
PLOT SCALE = 100.0000 ' / in.	CHECKED - MJS	REVISED -
PLOT DATE = 6/20/2023	DATE -	REVISED -

STATE OF ILLINOIS
DEPARTMENT OF TRANSPORTATION

SLOPE STEPS DETAIL

NOT TO SCALE **CADD STD. 205001–D4**

F.A.I. RTE.	SECTION	COUNTY	TOTAL SHEETS	SHEET NO.
474	(72-3HB-4)BR	PEORIA	175	136
		CONTRACT NO. 68886		
		ILLINOIS FED. AID PROJECT		

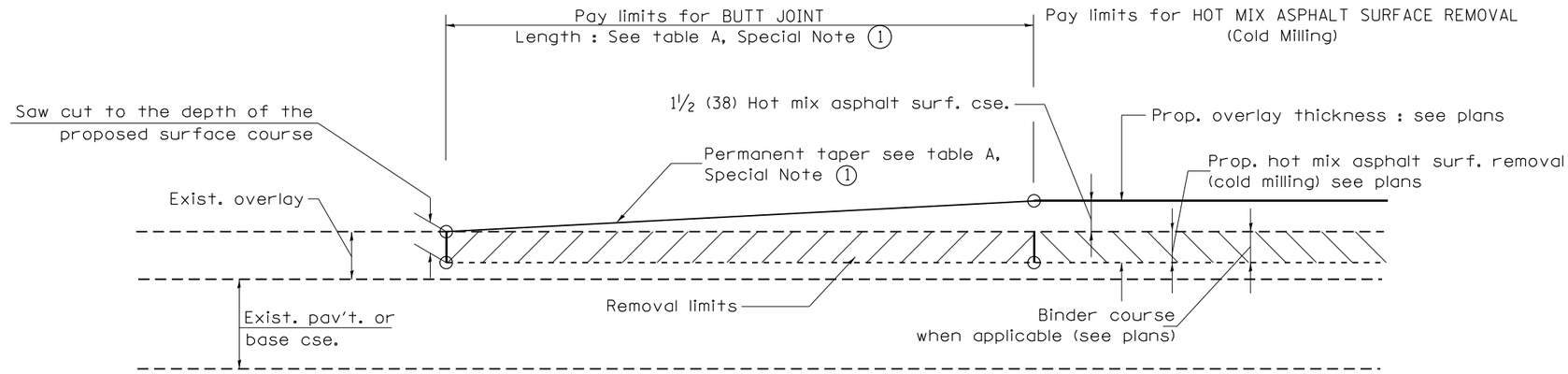

CASE 1 : WITH HOT MIX ASPHALT SURFACE REMOVAL (COLD MILLING)

TABLE A
TAPER RATES

SPECIAL NOTE NUMBER	ELEMENT	MAINLINE INTERSTATES & 4-LANE EXPRESSWAYS	ALL OTHERS
1	BUTT JOINT TAPER RATE	1:480	1:240
2	TEMPORARY RAMP TAPER RATE	1:80	1:40

GENERAL NOTES

1. The work shall be done in accordance with Article 406.08 and the Special Provision for Butt Joints.
2. The pavement surface to be removed may be either bituminous or P.C. concrete. The work shall be performed in accordance with Article 440.04 and the Special Provisions for Butt Joints.
3. The saw cut joints shall be primed just prior to the placing of bituminous material. The work will be in accordance with the applicable portions of Article 406.05.
4. The length of butt joint is based on the taper rate times change in cold milling depth within the butt joint pay limits, unless otherwise indicated.
5. Temporary ramps are paid for separately and not included in the cost of the butt joints.

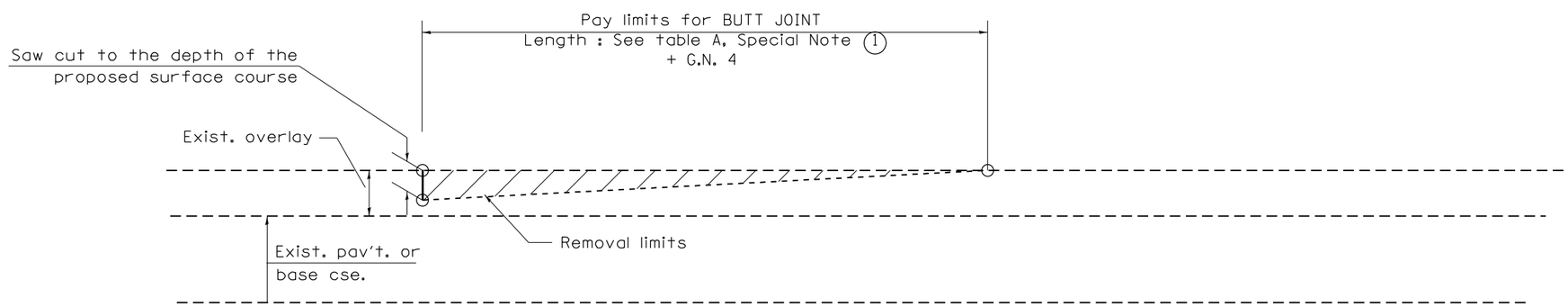

CASE 2 : NO HOT MIX ASPHALT SURFACE REMOVAL (COLD MILLING)

All dimensions are in inches (millimeters) unless otherwise noted.

MODEL: Default
FILE NAME: P:\Civil\ IDOT DIST4\PTB 194-035 var PH I-II 3120032\WO 10 Airport Road Phase 2 3120032-10\CAD Sheets\0468886-sht-ctd6.dgn

The Upchurch Group
architects engineers surveyors
Professional Design Firm Corporation License No. 184-003401
123 North 15th Street Mattoon, IL 61938 Phone: 217.235.3177
e-mail: upchurchgroup@upchurchgroup.com

USER NAME = Sta42	DESIGNED - MJS	REVISED -	
TUG PROJECT NO. 3120032-10	DRAWN -	REVISED -	
PLOT SCALE = 100.0000 ' / in.	CHECKED - MJS	REVISED -	
PLOT DATE = 6/20/2023	DATE -	REVISED -	

STATE OF ILLINOIS
DEPARTMENT OF TRANSPORTATION

BUTT JOINTS

NOT TO SCALE

SHT. 1 OF 3
CADD STD. 406101-D4

F.A.I. RTE.	SECTION	COUNTY	TOTAL SHEETS	SHEET NO.
474	(72-3HB-4)BR	PEORIA	175	137
		CONTRACT NO. 68886		
	ILLINOIS	FED. AID PROJECT		

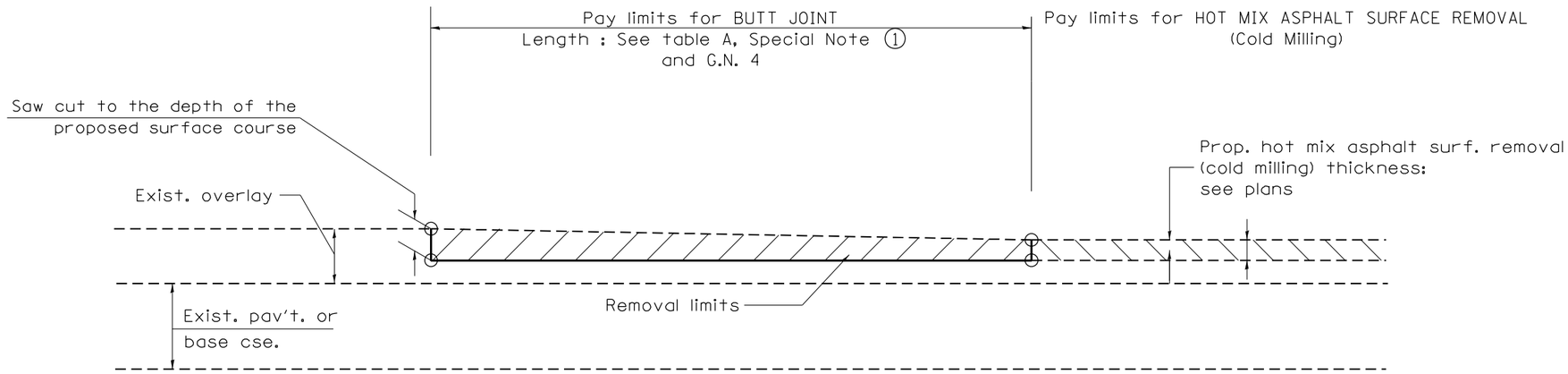

CASE 3 : HOT MIX ASPHALT SURFACE REMOVAL (COLD MILLING)
TIE-IN TO EXISTING BITUMINOUS TAPER

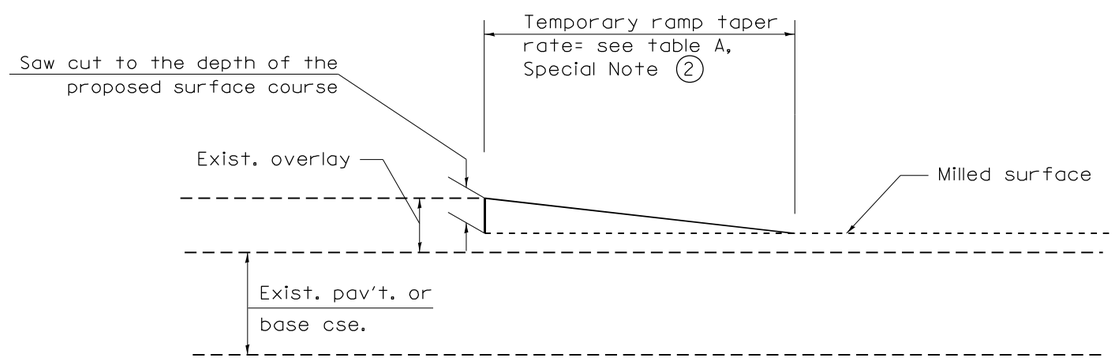

DETAIL TEMPORARY RAMP

All dimensions are in inches (millimeters) unless otherwise noted.

MODEL: Default
FILE NAME: P:\Civil_IDOT_DIST4\PTB_194-035_var PH I-II 3120032\WO 10 Airport Road Phase 2 3120032-10\CAD Sheets\D1488886-PH-sht5.dgn

The Upchurch Group
architects engineers surveyors
Professional Design Firm Corporation License No. 184-001001
123 North 15th Street Mattoon, IL 61938 Phone: 217.235.3177
e-mail: upchurchgroup@upchurchgroup.com

USER NAME = Sta42	DESIGNED - MJS	REVISED -	
TUG PROJECT NO. 3120032-10	DRAWN -	REVISED -	
PLOT SCALE = 100.0000 ' / in.	CHECKED - MJS	REVISED -	
PLOT DATE = 6/20/2023	DATE -	REVISED -	

STATE OF ILLINOIS
DEPARTMENT OF TRANSPORTATION

BUTT JOINTS

NOT TO SCALE

SHT. 2 OF 3
CADD STD. 406101-D4

F.A.I. RTE.	SECTION	COUNTY	TOTAL SHEETS	SHEET NO.
474	(72-3HB-4)BR	PEORIA	175	138
		CONTRACT NO. 68886		
		ILLINOIS	FED. AID PROJECT	

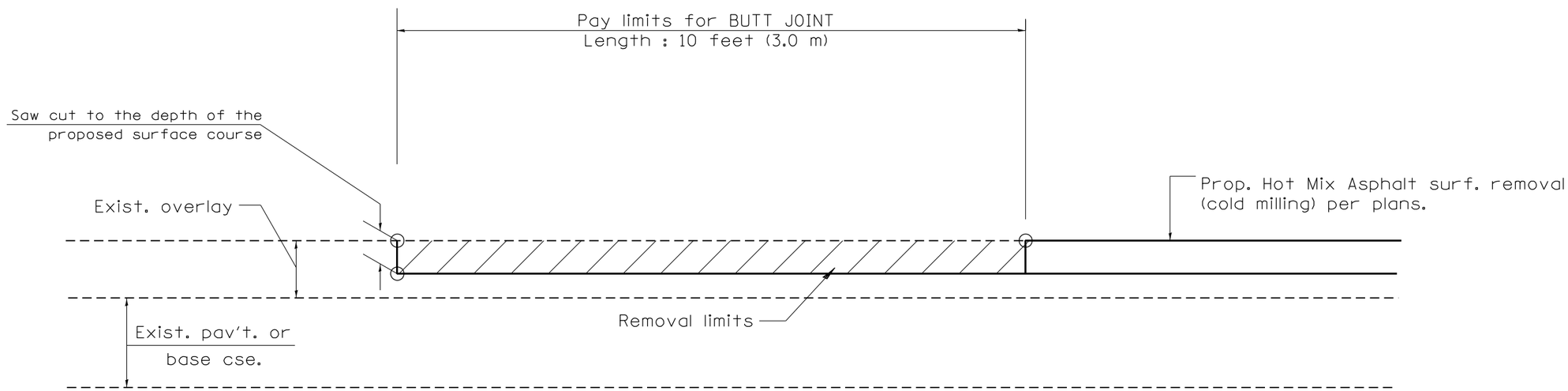

CASE 4 : SINGLE LIFT OVERLAY WITH EQUIVALENT DEPTH HOT MIX ASPHALT SURFACE REMOVAL (COLD MILLING) TIE-IN TO EXISTING BITUMINOUS TAPER

All dimensions are in inches (millimeters) unless otherwise noted.

MODEL: Default
FILE NAME: P:\Civil_IDOT_DIST4\PTB 194-035 var PH I-II 3120032\WO 10 Airport Road Phase 2 3120032-10\CAD Sheets\D468886-sht-ctds.dgn

The Upchurch Group
architects engineers surveyors
Professional Design Firm Corporation License No.: 184-003-001
123 North 15th Street Mattoon, IL 61938 Phone: 217.235.3177
e-mail: upchurchgroup@upchurchgroup.com

USER NAME = Sta42	DESIGNED - MJS	REVISED -	
TUG PROJECT NO. 3120032-10	DRAWN -	REVISED -	
PLOT SCALE = 100.0000 ' / in.	CHECKED - MJS	REVISED -	
PLOT DATE = 6/20/2023	DATE -	REVISED -	

STATE OF ILLINOIS
DEPARTMENT OF TRANSPORTATION

BUTT JOINTS

NOT TO SCALE

SHT. 3 OF 3
CADD STD. 406101-D4

F.A.I. RTE.	SECTION	COUNTY	TOTAL SHEETS	SHEET NO.
474	(72-3HB-4)BR	PEORIA	175	139
		CONTRACT NO. 68886		
		ILLINOIS FED. AID PROJECT		

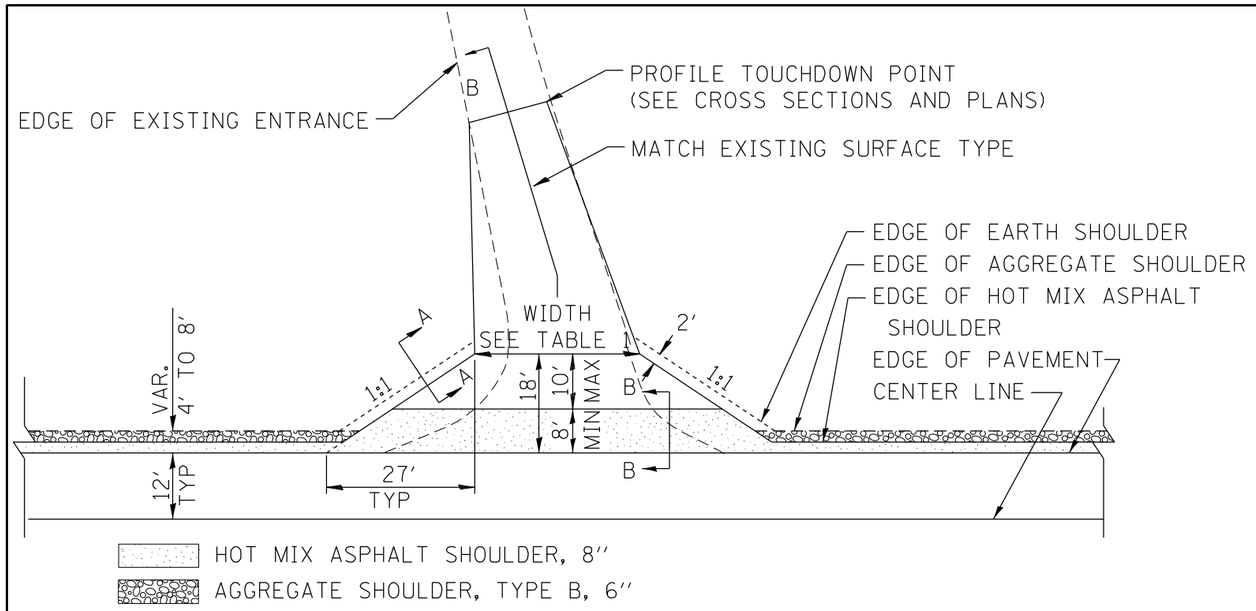

PLAN

COMMERCIAL / FARM-RELATED ENTRANCE

TABLE 1								
RURAL ENTRANCE DESIGN								
ELEMENT	NON-COMMERCIAL		NON-COMMERCIAL W/ LARGE FARM EQUIPMENT		COMMERCIAL			
					1-WAY OPERATION		2-WAY OPERATION	
WIDTH (W)	12'(3.6m) Min.	24'(7.2m) Max.	20' (6.1m)Min.	30'(9.0m)Max.	14'(4.3m) Min.	24'(7.2m) Max.	24'(7.2m) Min.	35'(10.7m) Max.
FLARE	1:1.5							
MAX. GRADE (G)	12%		12%		10%			
SURFACE TYPE								
INCIDENTAL HOT MIX ASPHALT SURFACING	6''		—		8''			
AGGREGATE SURFACE COURSE	6''		8''		—			
PCC DRIVEWAY PAVEMENT	6''		—		7''			

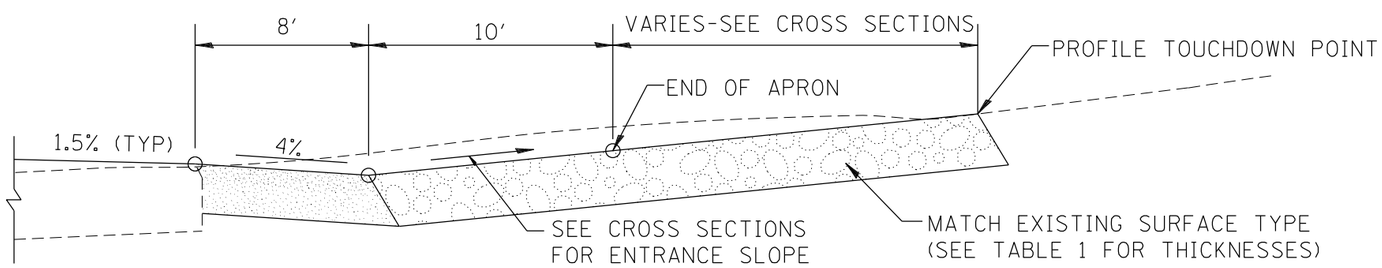

SECTION B-B

RECONSTRUCTED RURAL ENTRANCE

(EXISTING ENTRANCE HIGHER THAN APRON)

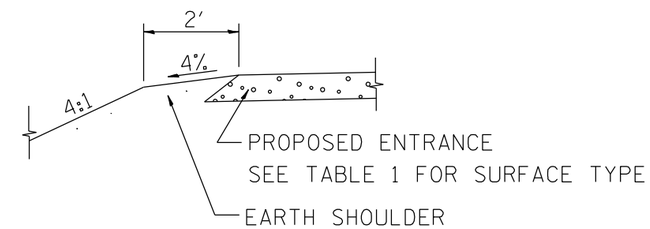

SECTION A-A

SHOULDER TREATMENT FOR RURAL ENTRANCES

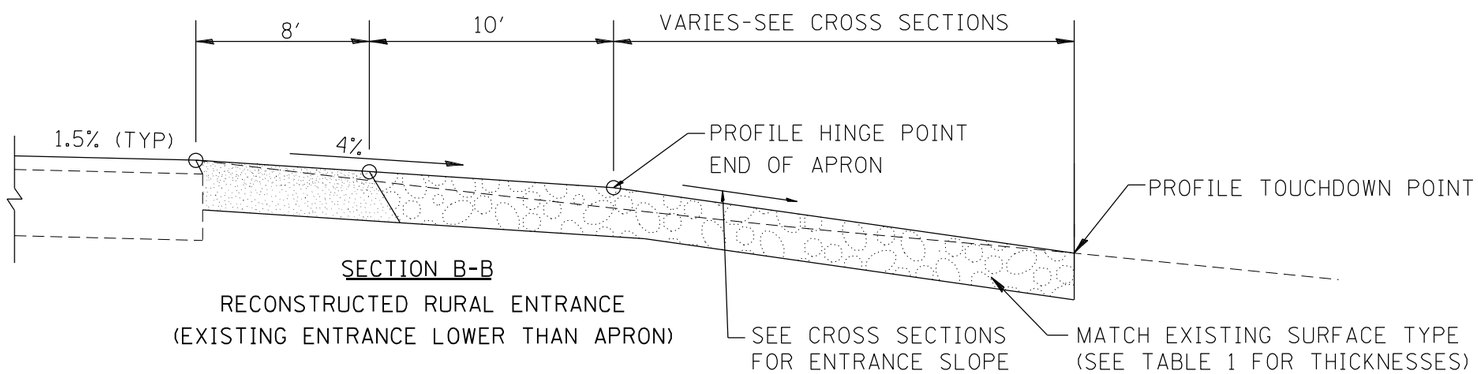

SECTION B-B

RECONSTRUCTED RURAL ENTRANCE

(EXISTING ENTRANCE LOWER THAN APRON)

GENERAL NOTES

1. ENTRANCES SHALL SLOPE AWAY FROM THE PAVEMENT AT A RATE EQUAL TO THE SHOULDER SLOPE FOR A MINIMUM DISTANCE OF 8'.

2. A MINIMUM 8' PAVED SHOULDER SHALL BE CONSTRUCTED BETWEEN LOCATIONS WHERE THE RURAL ENTRANCE IS LESS THAN 50' FROM AN ADJACENT SIDEROAD, ENTRANCE OR MAILBOX TURNOUT.

3. A TAPER RATE OF 5:1 IS DESIRABLE WHEN TRANSITING FROM THE RURAL ENTRANCE WIDTH SHOWN IN TABLE 1, TO THE EXISTING ENTRANCE WIDTH.

All dimensions are in inches (millimeters) unless otherwise noted.

The Upchurch Group
architects engineers surveyors
Professional Design Firm Corporation License No.: 184-003601
123 North 15th Street Mattoon, IL 61938
Phone: 217.235.3177
e-mail: upchurchgroup@upchurchgroup.com

USER NAME = Sta42	DESIGNED - MJS	REVISED -	
TUG PROJECT NO. 3120032-10	DRAWN -	REVISED -	
PLOT SCALE = 100.0000 ' / in.	CHECKED - MJS	REVISED -	
PLOT DATE = 6/20/2023	DATE -	REVISED -	

STATE OF ILLINOIS
DEPARTMENT OF TRANSPORTATION

RURAL ENTRANCES FOR "3R" PROJECTS

NOT TO SCALE

SHT. 1 OF 2
CADD STD. 406301-D4

F.A.I. RTE.	SECTION	COUNTY	TOTAL SHEETS	SHEET NO.
474	(72-3HB-4)BR	PEORIA	175	140
		CONTRACT NO. 68886		
	ILLINOIS	FED. AID PROJECT		

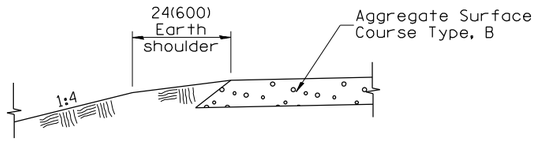

SECTION A-A

SHOULDER TREATMENT FOR AGGREGATE ENTRANCES

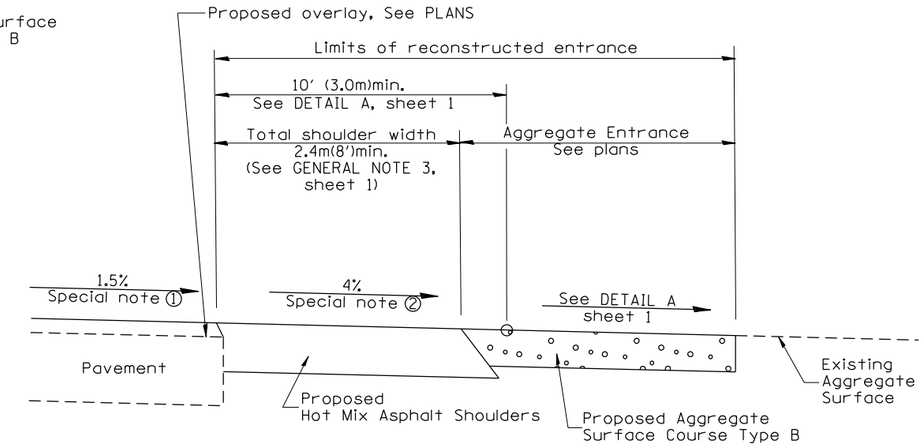

SECTION B-B

RECONSTRUCTED AGGREGATE ENTRANCE

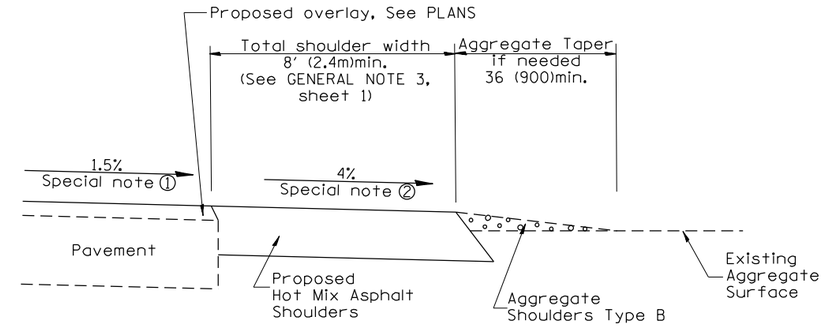

SECTION B-B

EXISTING AGGREGATE ENTRANCE

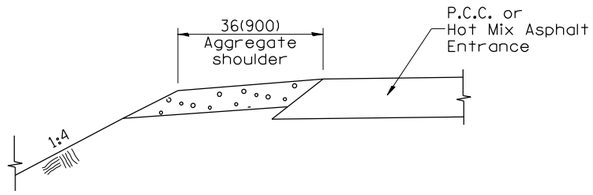

SECTION C-C

SHOULDER TREATMENT FOR P.C.C. OR HOT MIX ASPHALT ENTRANCES

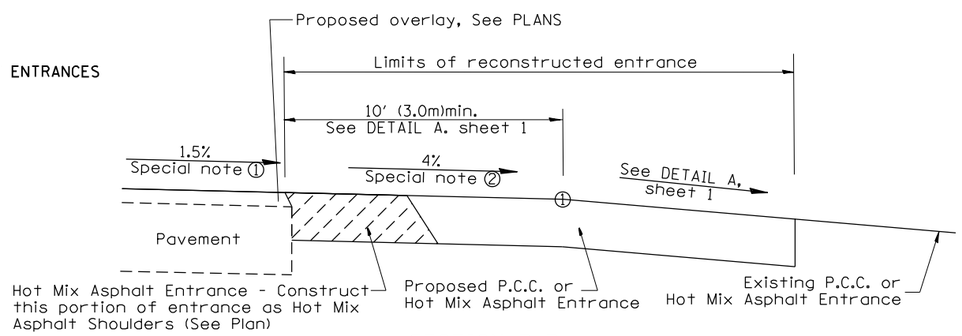

SECTION D-D

RECONSTRUCTED P.C.C. OR HOT MIX ASPHALT ENTRANCE

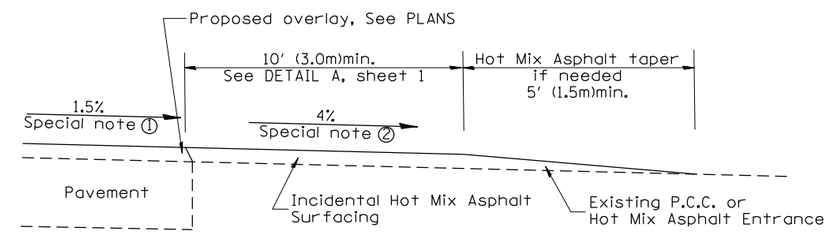

SECTION D-D

EXISTING P.C.C. OR HOT MIX ASPHALT ENTRANCE

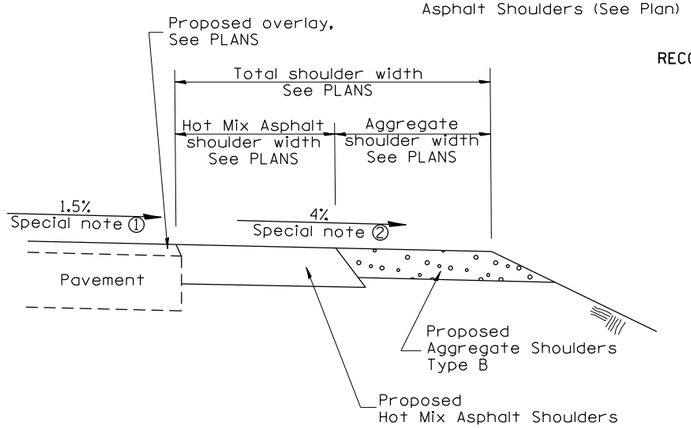

SECTION E-E

MAINLINE SHOULDER TREATMENT

SPECIAL NOTES

① The mainline pavement cross-slope is 1.5% for tangent alignment. See PLANS for cross-slope on superelevated horizontal curves.

② The shoulder slope shall control the entrance profile for a distance of 10' (3.0m) minimum from the pavement edge. The shoulder cross-slope is 4% for tangent alignment. Through superelevated curves, the maximum pavement-shoulder breakover should not be greater than 10% for shoulders 6' (1.8m) and wider and 12% for shoulders 4' (1.2m) and less. Where 12' (366cm) paved shoulders are provided, the breakover should be at the edge of the paved shoulder rather than at the pavement edge.

All dimensions are in inches (millimeters) unless otherwise noted.

MODEL: Default
FILE NAME: P:\Civil_IDOT_DIST4\PTB 194-035 var PH 1-II 3120032\VID 10 Airport Road Phase 2 3120032-10\CAD Sheets\0146886-sht-rdk.dgn

The Upchurch Group
architects engineers surveyors
Professional Design Firm Corporation License No. 184-003-001
123 North 15th Street
Mattoon, IL 61938
Phone: 217.235.3177
e-mail: upchurchgroup@upchurchgroup.com

USER NAME = Sta42	DESIGNED - MJS	REVISED -	
TUG PROJECT NO. 3120032-10	DRAWN -	REVISED -	
PLOT SCALE = 100.0000 ' / in.	CHECKED - MJS	REVISED -	
PLOT DATE = 6/20/2023	DATE -	REVISED -	

STATE OF ILLINOIS
DEPARTMENT OF TRANSPORTATION

RURAL ENTRANCES FOR "3R" PROJECTS

NOT TO SCALE

SHT. 2 OF 2
CADD STD. 406301-D4

F.A.I. RTE.	SECTION	COUNTY	TOTAL SHEETS	SHEET NO.
474	(72-3HB-4)BR	PEORIA	175	141
		CONTRACT NO. 68886		
	ILLINOIS	FED. AID PROJECT		

SLOPE DRAIN FOR BURIED PIPES

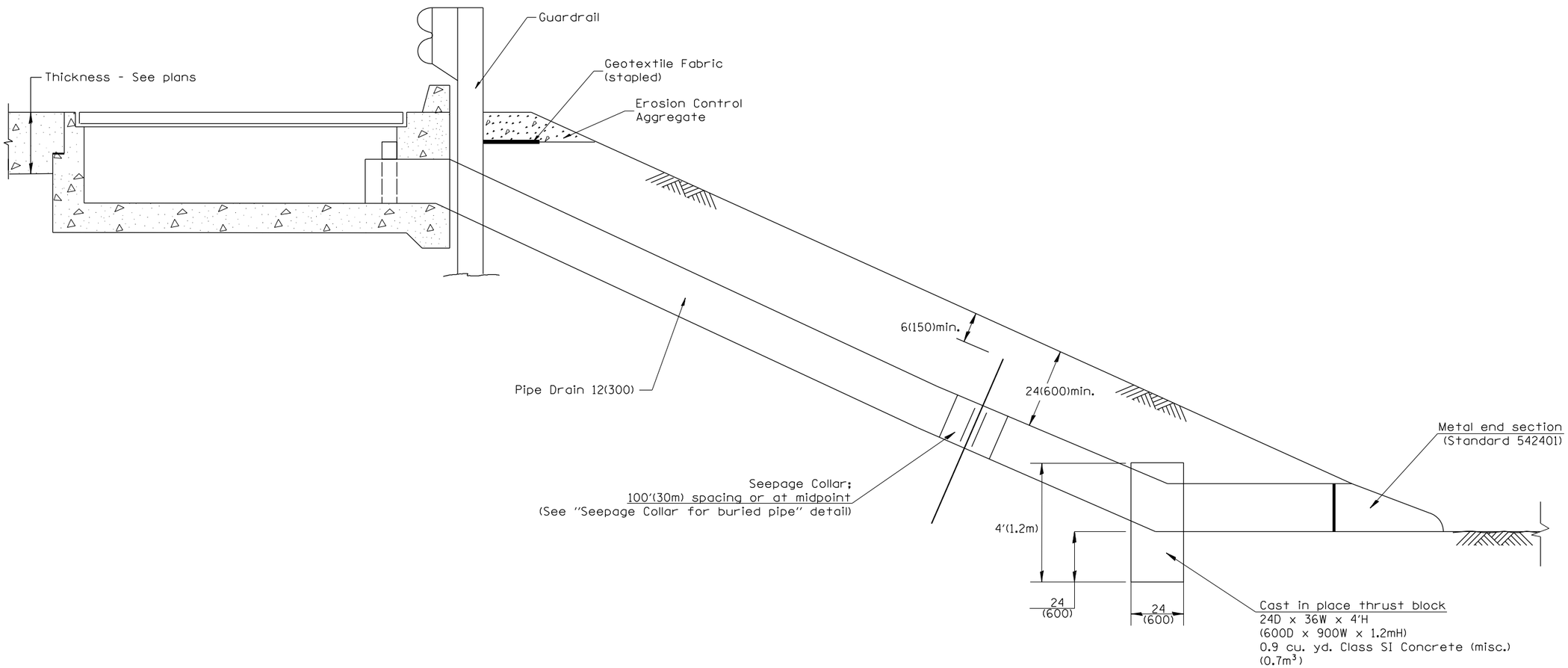

GENERAL NOTES

1. The material for Pipe Drains shall be bituminous coated galvanized corrugated steel culvert pipe or bituminous coated corrugated aluminum alloy pipe in accordance with Article 601.02(b) or 601.02(e) or Polyvinyl Chloride (PVC) pipe in accordance with Article 601.02 (s).

2. An approved mastic material (Article 1055.01) shall be applied to the inside of the connecting bands.

All dimensions are in inches (millimeters) unless otherwise noted.

DESIGNER NOTES:

1. IF USING ON A TALL SLOPE DISCUSS NUMBER OF THRUST BLOCKS NEEDED WITH PROJECT ENGINEER.
2. INCLUDE STATE STANDARD 610001, IF APPLICABLE
3. INCLUDE DISTRICT CADD STANDARDS FOR "GUARDRAIL EROSION CONTROL TREATMENTS", "SEEPAGE COLLARS FOR BURIED PIPES" AND "PIPE ELBOW"

QUANTITIES

CALC. BY: _____ DATE: _____

CHECKED BY: _____ DATE: _____

QUANTITY CALCULATIONS ARE ON FILE AT THE DISTRICT 4 OFFICE; BUREAU OF PROJECT IMPLEMENTATION; DOCUMENTATION SECTION

MODEL: Default
FILE NAME: P:\CAD\ IDOT DISTAUPTD 184.25 var Art.3T 3120032\00-10 Airport Road Phase 2\00082-21\CAD Sheets\D-88886-sht-construction

The Upchurch Group
architects engineers surveyors
Professional Design Firm Corporation
License No. 184-003401
123 North 15th Street
Mattoon, IL 61938
Phone: 217.235.3177
e-mail: upchurchgroup@upchurchgroup.com

USER NAME = Sta42	DESIGNED - MJS	REVISED -	
TUG PROJECT NO. 3120032-10	DRAWN -	REVISED -	
PLOT SCALE = 100.0000 ' / in.	CHECKED - MJS	REVISED -	
PLOT DATE = 6/20/2023	DATE -	REVISED -	

STATE OF ILLINOIS
DEPARTMENT OF TRANSPORTATION

SLOPE DRAIN DETAIL FOR BURIED PIPES

NOT TO SCALE **CADD STD. 601101–D4**

F.A.I. RTE.	SECTION	COUNTY	TOTAL SHEETS	SHEET NO.
474	(72-3HB-4)BR	PEORIA	175	142
		CONTRACT NO. 68886		
	ILLINOIS	FED. AID PROJECT		

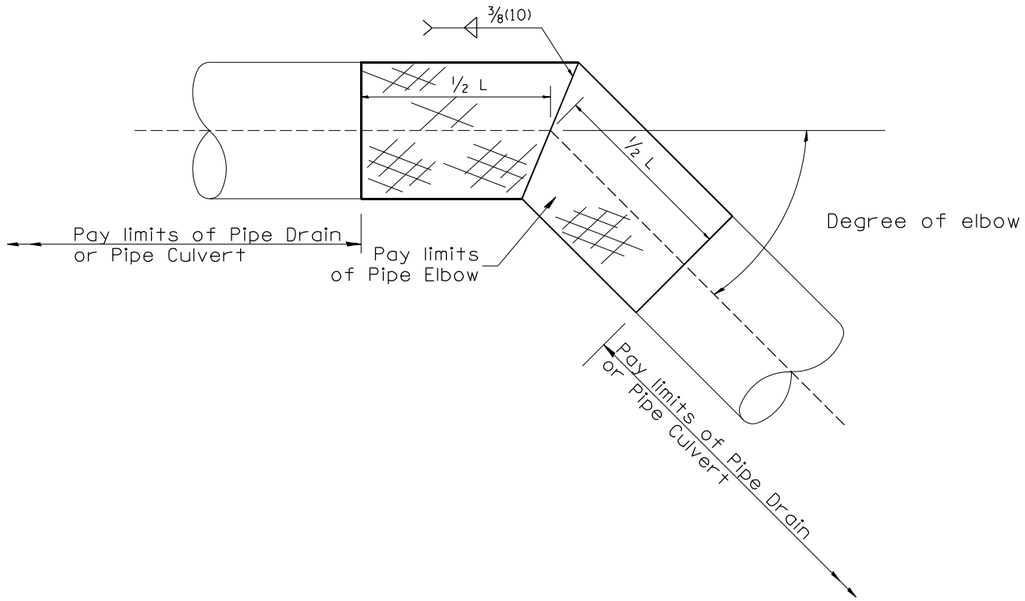

TABLE A		
ELBOW DESIGN CONTROLS		
PIPE DIAMETER	L = Pay limits of Pipe Elbow and minimum length of pipe required for fabrication	
	DEGREE OF ELBOW ≤ 45°	DEGREE OF ELBOW ≥ 46°
12(300)	24(600)	4'(1.22M)
15(375)	24(600)	4'(1.22M)
18(450)	24(600)	4'(1.22M)
21(525)	24(600)	4'(1.22M)
24(600)	4'(1.22M)	4'(1.22M)
30(750)	4'(1.22M)	6'(1.83M)
36(900)	4'(1.22M)	6'(1.83M)

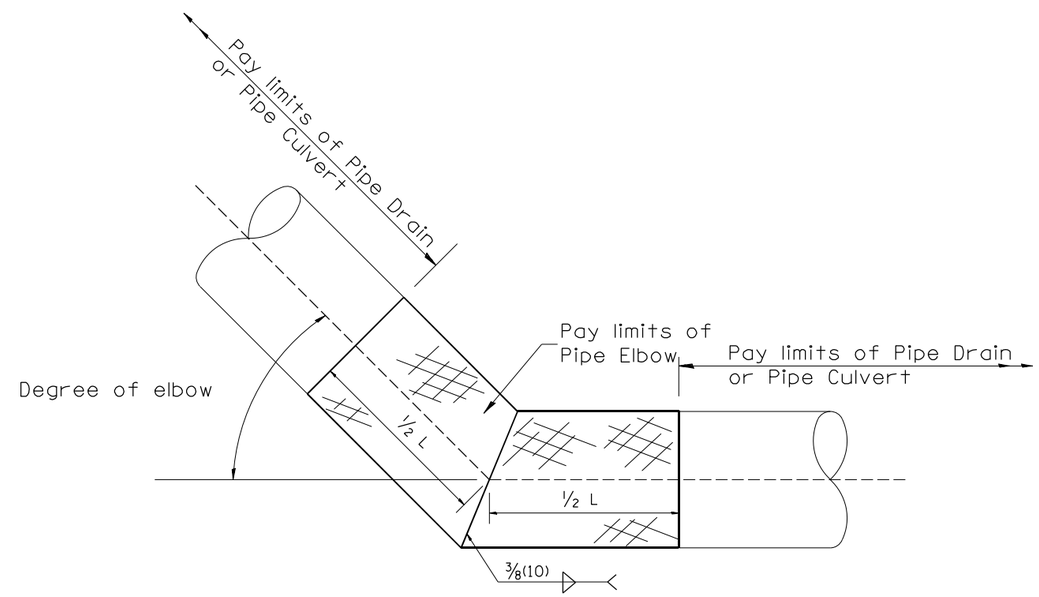

TABLE B	
ELBOW DESIGN CONTROLS	
EARTH SLOPE (V:H)	DEGREE OF ELBOW *
1:6	9°
1:4	14°
1:3	18°
1:2	26°
1:1 1/2	33°

* Approximate - based upon 0.5% inlet and outlet flowlines.

All dimensions are in inches (millimeters) unless otherwise noted.

DESIGNER NOTES: 1. Use with District CADD Standards: Slope Drains, Buried Pipe and/or Slope Drains - Exposed Pipe

MODEL: Default
FILE NAME: P:\Civil\IDOT DIST4\PTB 194-035 var PH I-II 3120032\WO 10 Airport Road Phase 2 3120032-10\CAD Sheets\D1488886-sht-std.dgn

The Upchurch Group
architects engineers surveyors
Professional Design Firm Corporation License No. 184-001001
123 North 15th Street Mattoon, IL 61938 Phone: 217.235.3177
e-mail: upchurchgroup@upchurchgroup.com

USER NAME = Sta42	DESIGNED - MJS	REVISED -
TUG PROJECT NO. 3120032-10	DRAWN -	REVISED -
PLOT SCALE = 100.0000 ' / in.	CHECKED - MJS	REVISED -
PLOT DATE = 6/20/2023	DATE -	REVISED -

STATE OF ILLINOIS
DEPARTMENT OF TRANSPORTATION

PIPE ELBOW

NOT TO SCALE

CADD STD. 601301–D4

F.A.I. RTE.	SECTION	COUNTY	TOTAL SHEETS	SHEET NO.
474	(72-3HB-4)BR	PEORIA	175	143
		CONTRACT NO. 68886		
	ILLINOIS	FED. AID PROJECT		

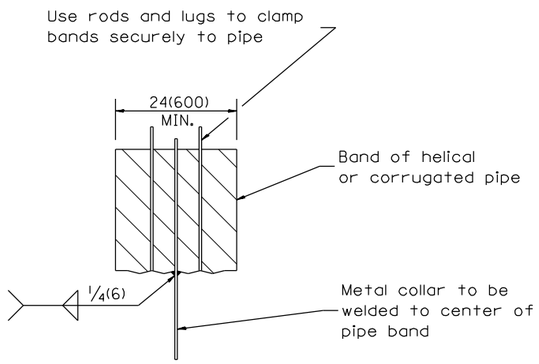

PARTIAL ELEVATION

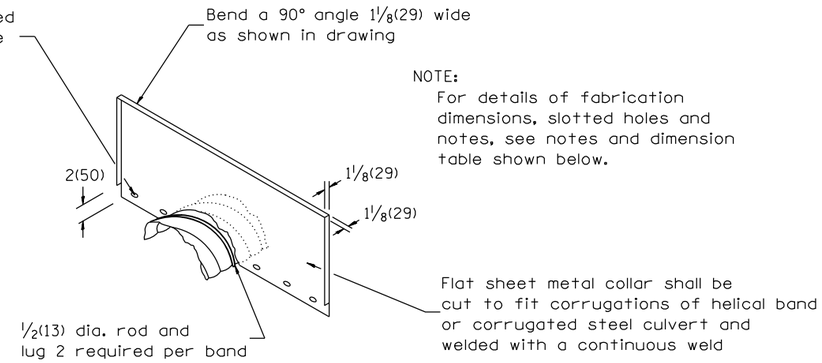

NOTE:
For details of fabrication dimensions, slotted holes and notes, see notes and dimension table shown below.

ISOMETRIC VIEW

DETAILS OF CORRUGATED PIPE COLLAR

NOTES FOR COLLARS:

1. Materials and coatings for all collars shall be the same as that specified for the pipe, except that bituminous coated steel or aluminum collars may be used with PVC pipe.

2. Collars shall be shop fabricated, assembled and marked by painting to identify matching half sections of each collar.

3. The laps between the half sections and between the pipe and connecting bands shall be caulked with fiberized asphalt mastic at the time of installation.

4. All tank lugs, rods, and nuts shall be galvanized steel. Where aluminum collars are used, The rods and lugs shall be separated from the aluminum bands. By at least two (2) layers of 2(50) wide plastic tape with a total thickness of 2 1/4 mils or more.

5. The collars shall be welded to the connecting bands as shown on the drawings, all welds shall be treated as specified for class I, II, and III welds, miscellaneous. (Refer to AWS Standard Specifications)

6. Bands shall be fabricated from material having the same class of corrugations as the pipe to which it is to be attached.

7. Upper half of sheet may be cut shorter to provide 6(150) min. earth cover.

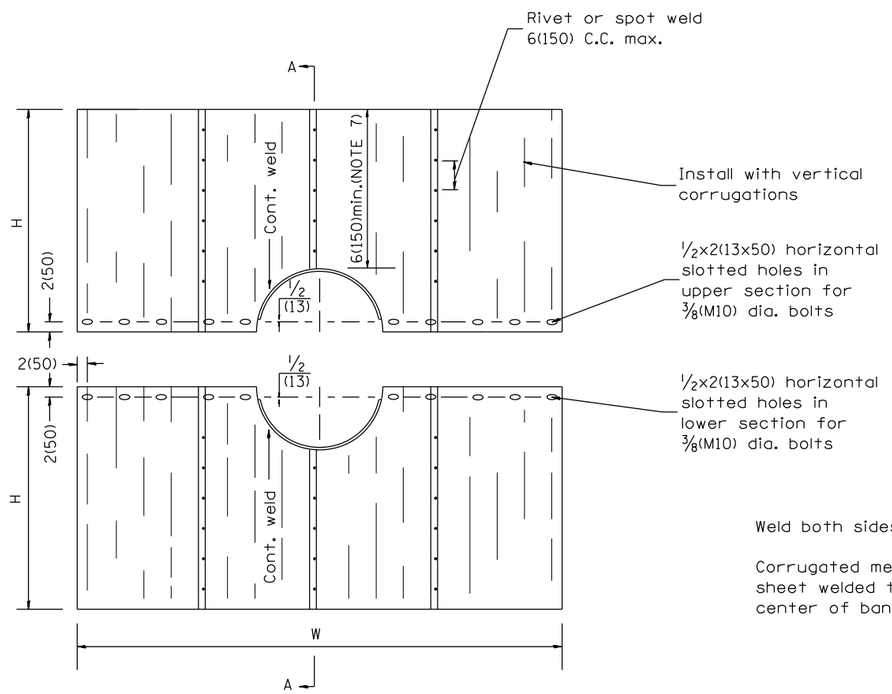

ELEVATION

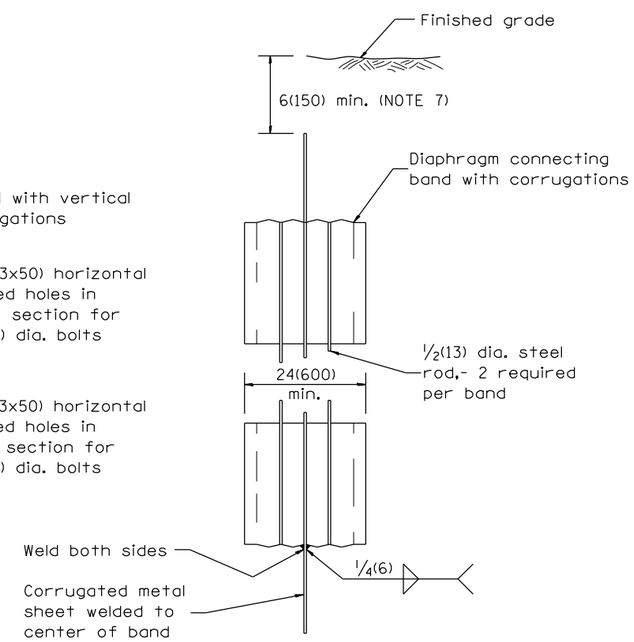

SECTION A-A

DETAILS OF SEEPAGE COLLAR

SEEPAGE COLLAR DIMENSION TABLE

PIPE DIAMETER	NOMINAL COLLAR SIZE	FABRICATIONS DIMENSIONS	
		W(WIDTH)	H(HEIGHT)
12(300) 15(375), 18(450) 21(525), 24(600)	8'x6' (2.4m x 1.8m)	8'-0" (2.44m)	38(966)
27(675) 30(750)	8'x7' (2.4m x 2.1m)	8'-0" (2.44m)	3'-8" (1.12m)
36(900), 42(1050) 48(1200)	10'x7' (3.0m x 2.1m)	10'-0" (3.05m)	3'-8" (1.12m)

Collar dimensions shown may be increased to allow fabrication from standard size sheets.

SEEPAGE COLLAR SPACING
Less than 24(600) pipe: 100' (30m) spacing or midpoint
Equal to or greater than 24(600) pipe: 80' (24m) spacing or midpoint

All dimensions are in inches (millimeters) unless otherwise noted.

DESIGNER NOTES:
1. USE WITH DISTRICT CADD STANDARD: "SLOPE DRAIN FOR BURIED PIPES"
2. ADD DISTRICT SPECIAL PROVISION.

MODEL: Default
FILE NAME: P:\CUR\IDOT\D5\Apprv\3120032-10\Drawings\Sta42\3120032-10_Sta42.dgn
PLOT SCALE: 100.0000 ' / in. PLOT DATE: 6/20/2023 USER NAME: Sta42

The Upchurch Group
architects engineers surveyors
Professional Design Firm Corporation License No. 184-001401
123 North 15th Street Mattoon, IL 61938 Phone: 217.235.3177
e-mail: upchurchgroup@upchurchgroup.com

DESIGNED - MJS	REVISED -	
TUG PROJECT NO. 3120032-10	DRAWN -	REVISED -
CHECKED - MJS	REVISED -	
DATE -	REVISED -	

STATE OF ILLINOIS
DEPARTMENT OF TRANSPORTATION

DETAILS OF SEEPAGE COLLARS FOR BURIED PIPES

NOT TO SCALE

CADD STD. 601401-D4

F.A.I. RTE.	SECTION	COUNTY	TOTAL SHEETS	SHEET NO.
474	(72-3HB-4)BR	PEORIA	175	144
		CONTRACT NO. 68886		
		ILLINOIS FED. AID PROJECT		

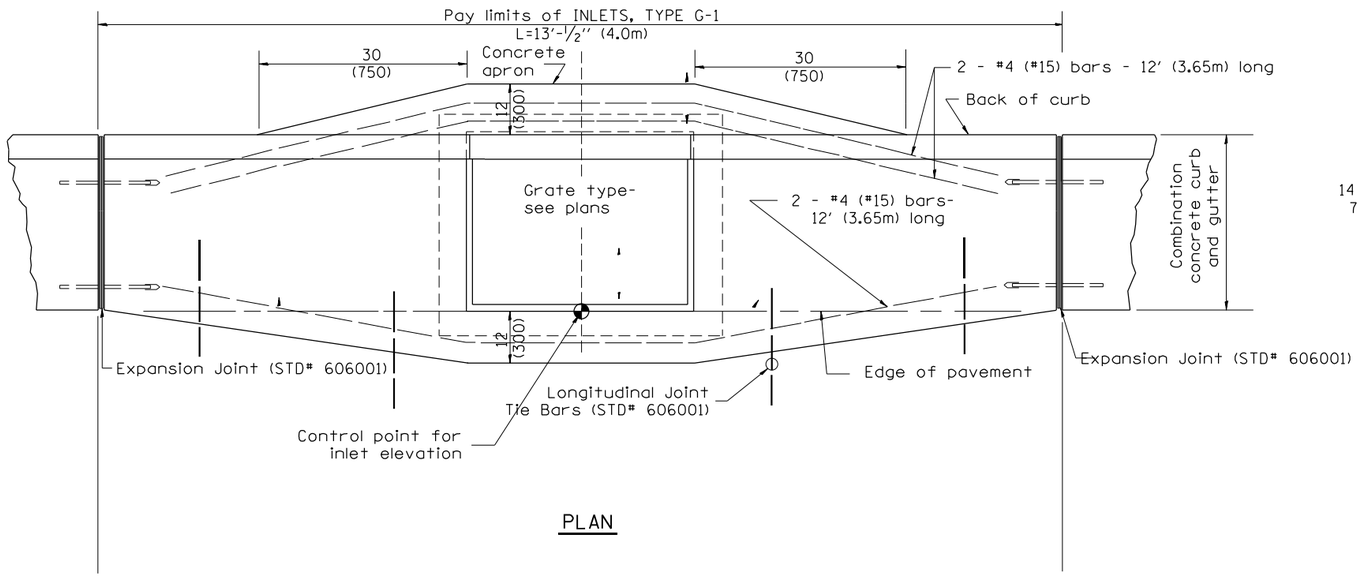

PLAN

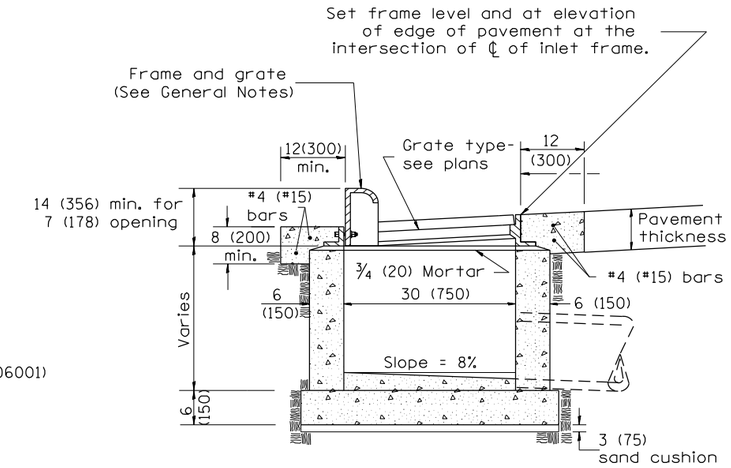

ELEVATION
SIDE

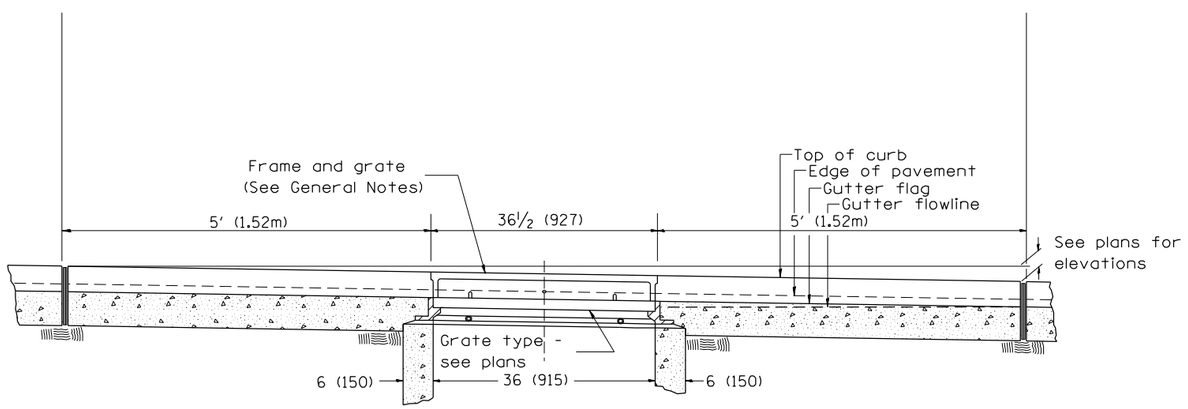

ELEVATION
FRONT

GENERAL NOTES

1. Inlet construction shall be in accordance with Section 602 of the Standard Specifications.
2. Combination Concrete Curb & Gutter shall be constructed in accordance with Section 606 of the Standard Specifications.
3. See District CADD Standard 604001-D4 for frame and grates.

DESIGNER NOTES:

1. Include State Standard 606001 for combination concrete curb and gutter details.
2. Include State Standard 420001 for pavement joints.
3. Include District CADD Standard for frame and grates and specify grate type in plans.
4. Include District Special Provision. Pay item includes transitional c.c.c &g., inlet and frame and grate. All work within pay limits.
5. The designer should include pavement removal quantities when the apron requires pavement removal.

All dimensions are in inches (millimeters) unless otherwise noted.

MODEL: Default IDOT OIST4\PFB 194-035 var PH III 3120032\WO 10 Airport Road Phase 2 3120032-10\CAD Sheets\0468868-dth-std6.dgn
FILE NAME: P:\Civil

The Upchurch Group
architects engineers surveyors
Professional Design Firm Corporation License No. 184-000401
123 North 15th Street Mattoon, IL 61938 Phone: 217.235.3177
e-mail: upchurchgroup@upchurchgroup.com

USER NAME = Sta42	DESIGNED - MJS	REVISED -	
TUG PROJECT NO. 3120032-10	DRAWN -	REVISED -	
PLOT SCALE = 100.0000 ' / in.	CHECKED - MJS	REVISED -	
PLOT DATE = 6/20/2023	DATE -	REVISED -	

STATE OF ILLINOIS
DEPARTMENT OF TRANSPORTATION

INLETS, TYPE G-1

NOT TO SCALE

CADD STD. 602001-D4

F.A.I. RTE.	SECTION	COUNTY	TOTAL SHEETS	SHEET NO.
474	(72-3HB-4)BR	PEORIA	175	145
		CONTRACT NO. 68886		
	ILLINOIS	FED. AID PROJECT		

1. Include this standard with all Type G-1 and Type G-1, Special Drainage Structures.
2. Specify grate types and flow directions in plans.
3. These castings are included in the cost of the drainage structures as per District Special Provision.
4. This drawing based upon "NEENAH" designs as follows: Inlet Frame: R-3246-A , Curb Box: R-3290
Reversable Diagonal Grate: R-3246-A
Vane Grates: R-3246-AL(flow left)
R-3246-AL(flow right)

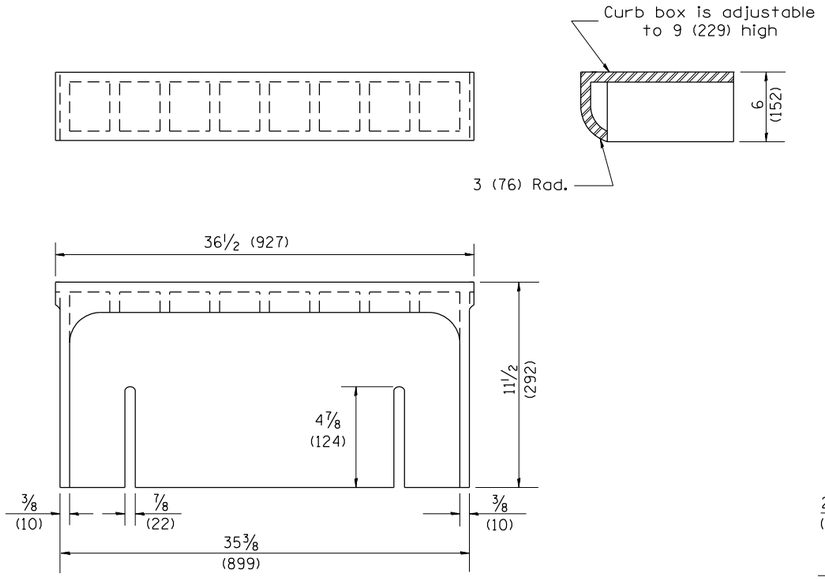

CAST CURB BOX
110 lbs. (50 kg)

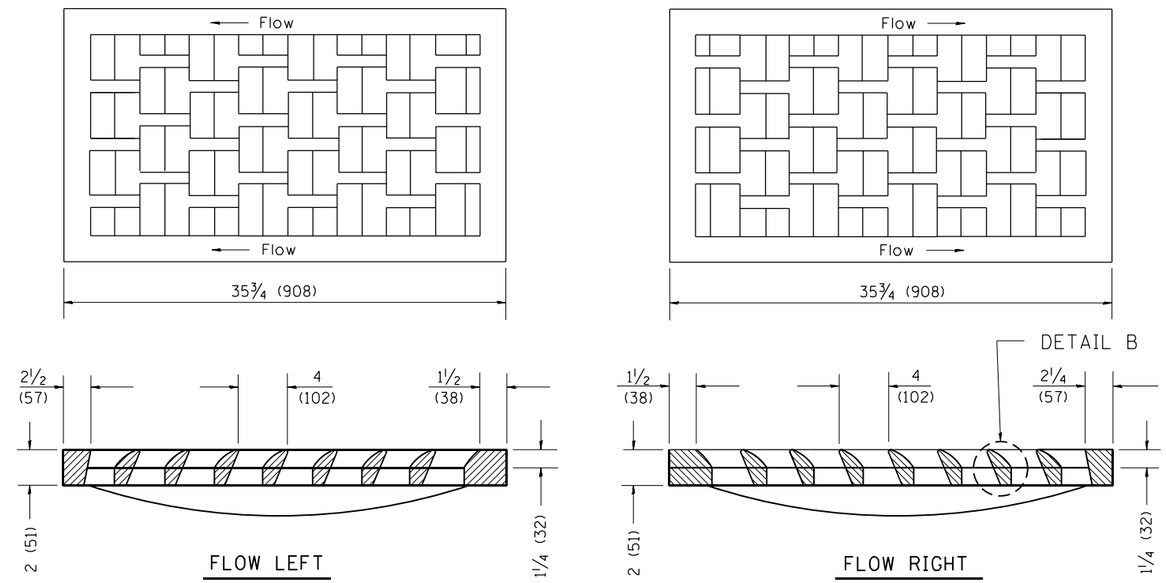

CAST VANE GRATES
(SPECIFY LEFT OR RIGHT FLOW)
230 lbs. (104 KG)

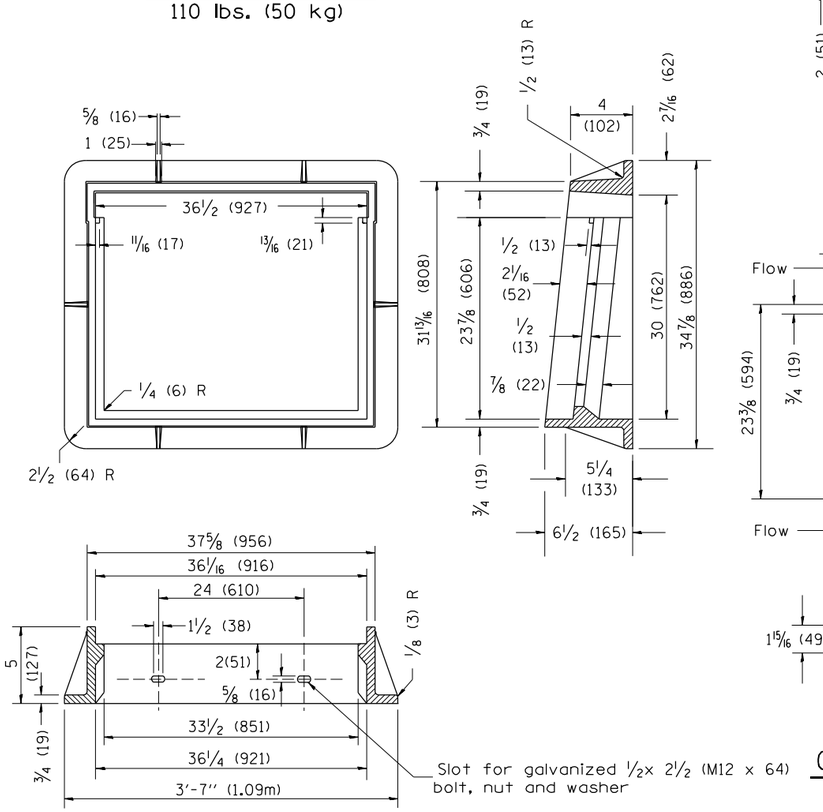

CAST FRAME
271 lbs. (123 kg)

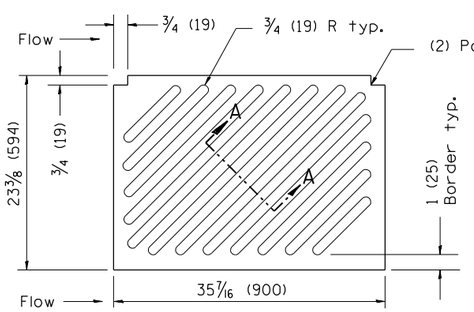

NOTE: Flow right shown

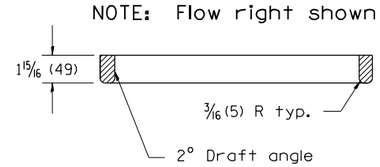

CAST DIAGONAL GRATE
(Reversible for flow)
217 lbs. (98 kg)

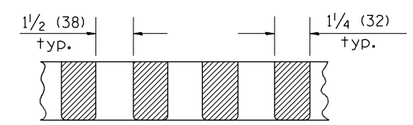

SECTION A-A

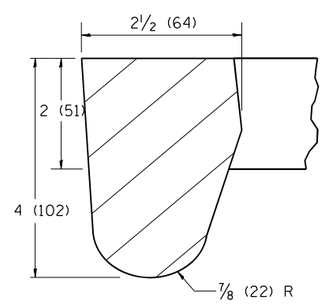

DETAIL A

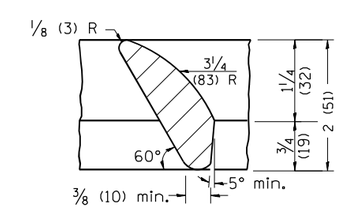

DETAIL B

GENERAL NOTES

1. The frame and grate shown on this drawing are for use with all TYPE G-1 and TYPE G-1, SPECIAL DRAINAGE STRUCTURES. See plans for grate type and flow direction.
2. Flow direction: As viewed from street side.
3. Material: cast gray iron.

All dimensions are in inches (millimeters) unless otherwise noted.

MODEL: Default
FILE NAME: PICW:\IDOT_DIST4\PTB_194-035_var PH I-II 3120032\WO 10 Airport Road Phase 2 3120032-10\CAD Sheets\b468886-sht-crds.dgn

The Upchurch Group architects engineers surveyors Professional Design Firm Corporation License No. 184-001401 123 North 15th Street Mattoon, IL 61938 Phone: 217.235.3177 e-mail: upchurchgroup@upchurchgroup.com	USER NAME = Sta42	DESIGNED - MJS	REVISED -	STATE OF ILLINOIS DEPARTMENT OF TRANSPORTATION	FRAME & GRATES FOR TYPE G-1 AND TYPE G-1, SPECIAL DRAINAGE STRUCTURES
	TUG PROJECT NO. 3120032-10	DRAWN -	REVISED -		
	PLOT SCALE = 100.0000 ' / in.	CHECKED - MJS	REVISED -		NOT TO SCALE CADD STD. 604001-D4
	PLOT DATE = 6/20/2023	DATE -	REVISED -		

F.A.I. RTE.	SECTION	COUNTY	TOTAL SHEETS	SHEET NO.
474	(72-3HB-4)BR	PEORIA	175	146
		CONTRACT NO. 68886		
		ILLINOIS FED. AID PROJECT		

DESIGNER NOTES:
1. A THRUST BLOCK SHALL BE INSTALLED WHEN THE DIFFERENCE BETWEEN THE UPSTREAM AND DOWNSTREAM INVERT ELEVATIONS EXCEEDS 36(900) AND GRADE EXCEEDS 10%.
2. USE WITH DISTRICT CADD STANDARDS: "DITCH CHECK, IF NEEDED. DO NOT USE WITH DISTRICT CADD STANDARDS: "SLOPE DRAIN DETAILS FOR BURIED PIPE" "SLOPE DRAIN DETAILS FOR EXPOSED PIPE".

CONCRETE THRUST BLOCK
BILL OF MATERIALS

PIPE SIZE	X	Y	CLASS SI CONCRETE cu. yd. (m^3)
12(300)	24(600)	24(600)	0.2(0.2)
15(375)	27(675)	27(675)	0.3(0.2)
18(450)	30(750)	30(750)	0.3(0.2)
24(600)	36(900)	36(900)	0.4(0.3)
30(750)	3'-6" (1.07m)	3'-6" (1.07m)	0.8(0.6)

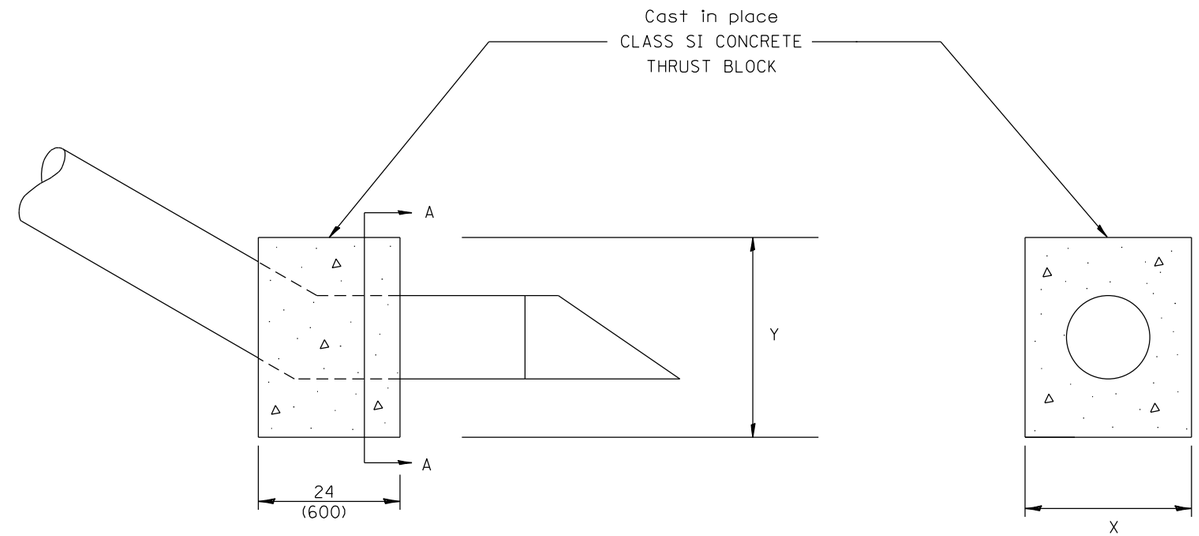

SIDE VIEW

SECTION A-A

The contract unit price each for CONCRETE THRUST BLOCK shall include the cost of excavation, CLASS SI CONCRETE and compacted backfill.

QUANTITIES

CALC. BY: _____ DATE:

CHECKED BY: _____ DATE:

QUANTITY CALCULATIONS ARE ON FILE AT THE DISTRICT 4 OFFICE; BUREAU OF PROJECT IMPLEMENTATION; DOCUMENTATION SECTION

All dimensions are in inches (millimeters) unless otherwise noted.

MODEL: Default
FILE NAME: P:\Civil\ IDOT DIST4\PTB 194-035 var PH 1\3120032\WO 10 Airport Road Phase 2 3120032-10\CAD Sheets\0148886-sht-cnc6.dgn

The Upchurch Group
architects engineers surveyors
Professional Design Firm Corporation License No. 184-003401
e-mail: upchurchgroup@upchurchgroup.com
123 North 15th Street Mattoon, IL 61938 Phone: 217.235.3177

USER NAME = Sta42	DESIGNED - MJS	REVISED -	
TUG PROJECT NO. 3120032-10	DRAWN -	REVISED -	
PLOT SCALE = 100.0000 ' / in.	CHECKED - MJS	REVISED -	
PLOT DATE = 6/20/2023	DATE -	REVISED -	

STATE OF ILLINOIS
DEPARTMENT OF TRANSPORTATION

CONCRETE THRUST BLOCKS

NOT TO SCALE **CADD STD. 609001–D4**

F.A.I. RTE.	SECTION	COUNTY	TOTAL SHEETS	SHEET NO.
474	(72-3HB-4)BR	PEORIA	175	147
		CONTRACT NO. 68886		
	ILLINOIS	FED. AID PROJECT		

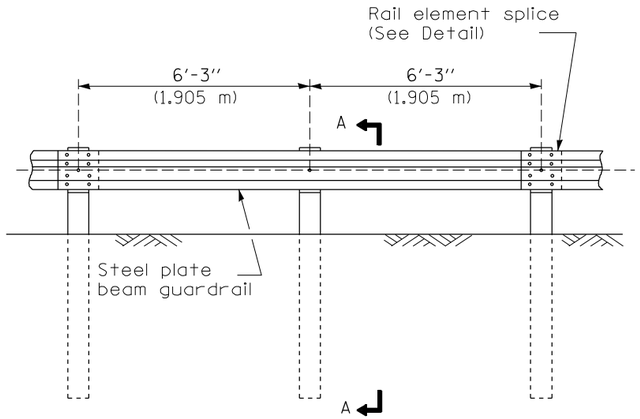

ELEVATION

TYPE A

6'-3" (1.905 m) Typical post spacing

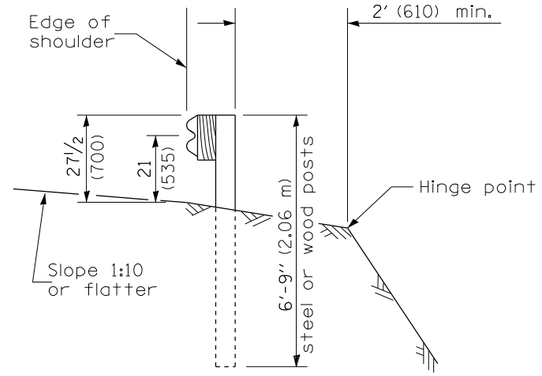

SECTION A-A

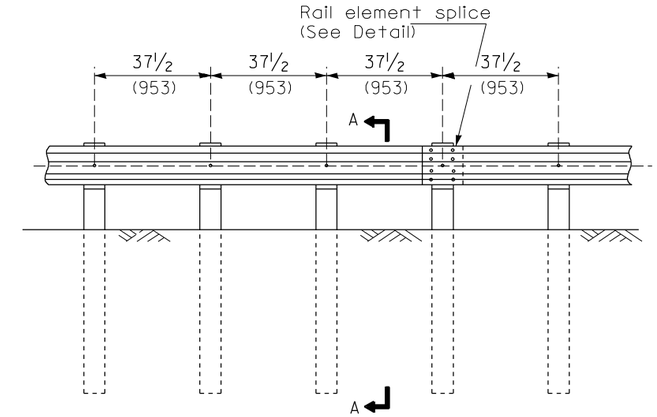

ELEVATION

TYPE B

37½ (953) Closed post spacing

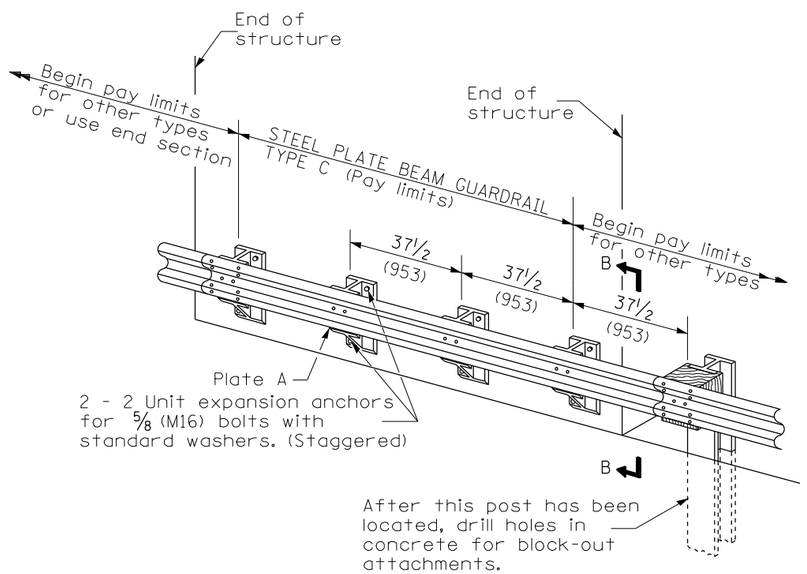

TYPE C

37½ (953) Block-out spacing

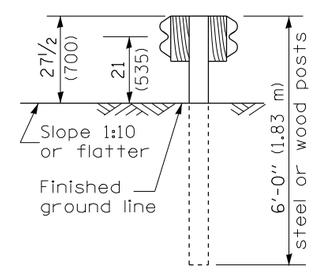

SECTION C-C

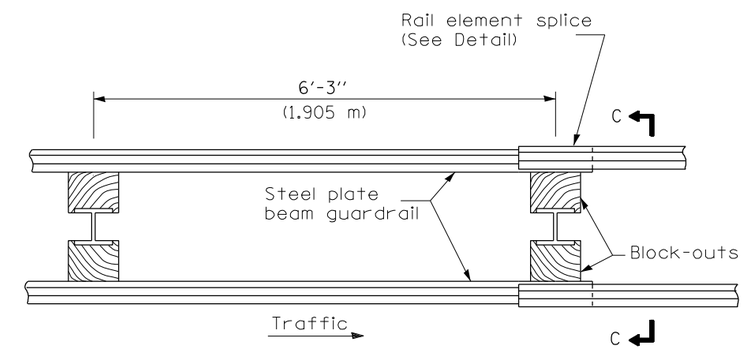

PLAN

TYPE D

Double steel plate beam guardrail
6'-3" (1.905 m) typical post spacing

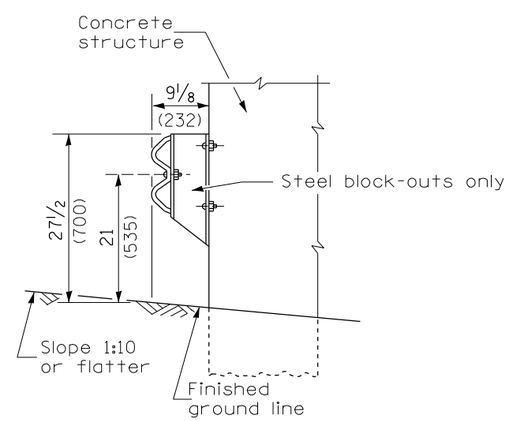

SECTION B-B

GENERAL NOTES

All slope ratios are expressed as units of vertical displacement to units of horizontal displacement (V:H).

All dimensions are in millimeters (inches) unless otherwise shown.

The existing steel posts may be drilled to match the bolt pattern shown herein for the wood block-out, or a new steel post shall be provided.

This detail is applicable to the guardrail system used prior to January 1, 2007. For details on the Midwest Guardrail System, see Standard 630001.

All dimensions are in inches (millimeters) unless otherwise noted.

DESIGNER NOTE: Use this CADD Standard when removing and re-erecting existing non-MGS guardrail that was originally installed prior to January 1, 2007 or to replace existing rail to match existing non-MGS rail. Note this is removing and re-erecting so the 27½" height is maintained. If installing the new, style MGS guardrail use the State Standard.

MODEL: Default
FILE NAME: P:\CIVIL\IDOT DIST4\PTB 194-035 .dgn

The Upchurch Group
architects engineers surveyors
Professional Design Firm Corporation
License No. 184-001601
123 North 15th Street
Mattoon, IL 61938
Phone: 217.235.3177
e-mail: upchurchgroup@upchurchgroup.com

USER NAME = Sta42	DESIGNED - MJS	REVISED -
TUG PROJECT NO. 3120032-10	DRAWN -	REVISED -
PLOT SCALE = 100.0000 ' / in.	CHECKED - MJS	REVISED -
PLOT DATE = 6/20/2023	DATE -	REVISED -

STATE OF ILLINOIS
DEPARTMENT OF TRANSPORTATION

STEEL PLATE BEAM GUARDRAIL, TYPE A,
6.75 FOOT POSTS

NOT TO SCALE

SHT. 1 OF 4
CADD STD. 630011-D4

F.A.I. RTE.	SECTION	COUNTY	TOTAL SHEETS	SHEET NO.
474	(72-3HB-4)BR	PEORIA	175	148
		CONTRACT NO. 68886		
		ILLINOIS	FED. AID PROJECT	

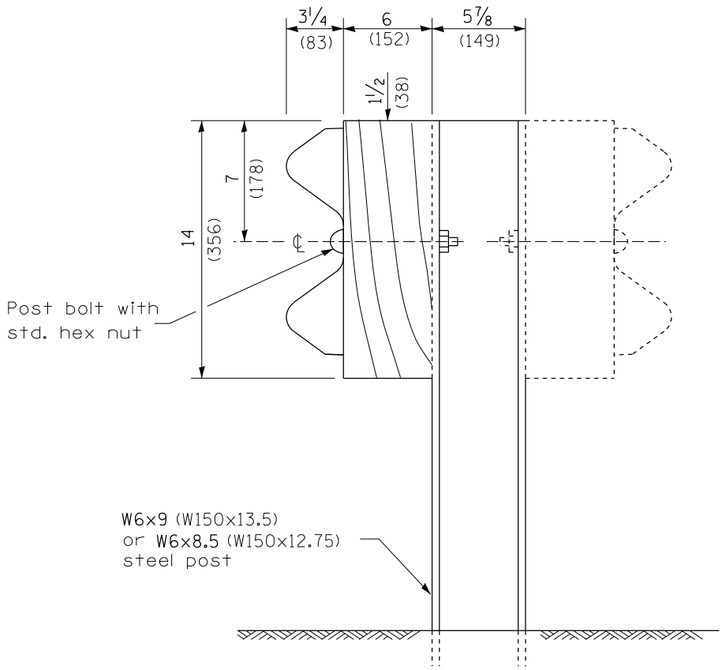

STEEL POST CONSTRUCTION

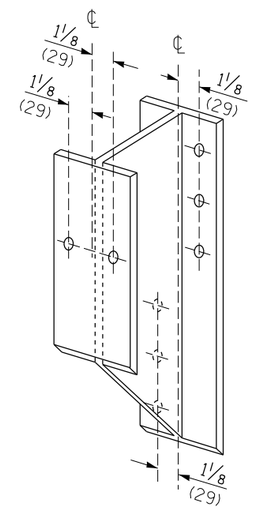

STEEL BLOCK-OUT DETAIL

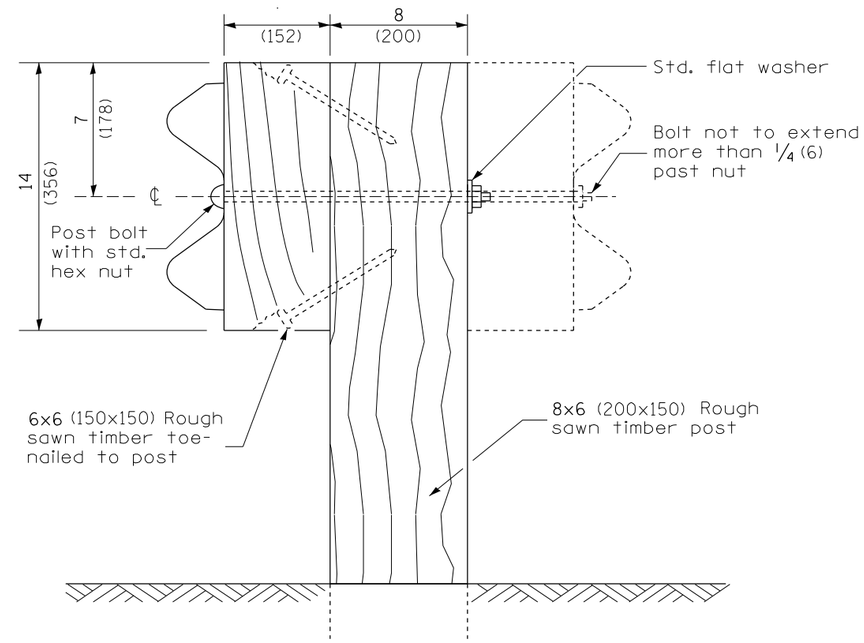

WOOD POST CONSTRUCTION

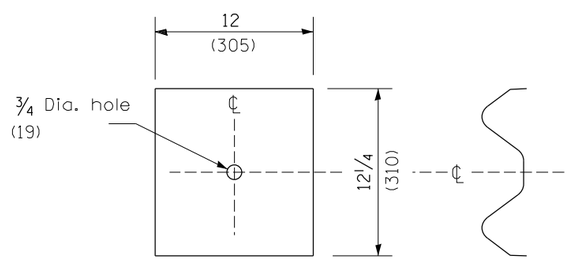

NOTE

Plate A shall be placed between rail element and block-out at non-splice mounting points only when steel block-outs are used.

PLATE A

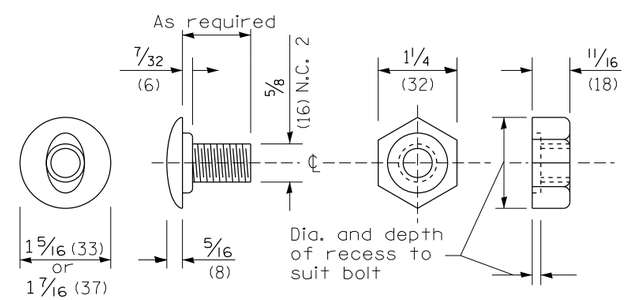

POST OR SPLICE BOLT & NUT

All dimensions are in inches (millimeters) unless otherwise noted.

MODEL: Default
FILE NAME: P:\Civil_IDOT_DIST4\PTB 194-033 var PH I-II 3120032\WO 10 Airport Road Phase 2 3120032-10\CAD Sheets\D468886-sht-sd6.dgn

The Upchurch Group architects engineers surveyors Professional Design Firm Corporation License No. 184-003-001 123 North 15th Street Mattoon, IL 61938 Phone: 217.235.3177 e-mail: upchurchgroup@upchurchgroup.com	USER NAME = Sta42	DESIGNED - MJS	REVISED -	STATE OF ILLINOIS DEPARTMENT OF TRANSPORTATION
	TUG PROJECT NO. 3120032-10	DRAWN -	REVISED -	
	PLOT SCALE = 100.0000 ' / in.	CHECKED - MJS	REVISED -	
	PLOT DATE = 6/20/2023	DATE -	REVISED -	

STEEL PLATE BEAM GUARDRAIL, TYPE A,
6.75 FOOT POSTS

NOT TO SCALE

SHT. 2 OF 4
CADD STD. 630011-D4

F.A.I. RTE.	SECTION	COUNTY	TOTAL SHEETS	SHEET NO.
474	(72-3HB-4)BR	PEORIA	175	149
		CONTRACT NO. 68886		
	ILLINOIS	FED. AID PROJECT		

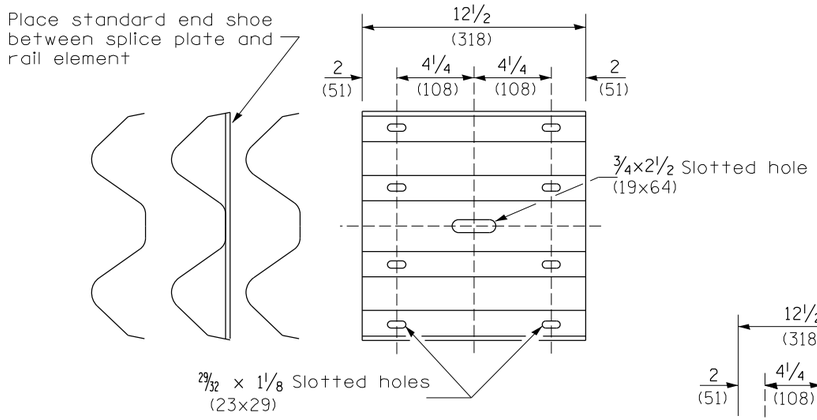

SPLICE PLATE

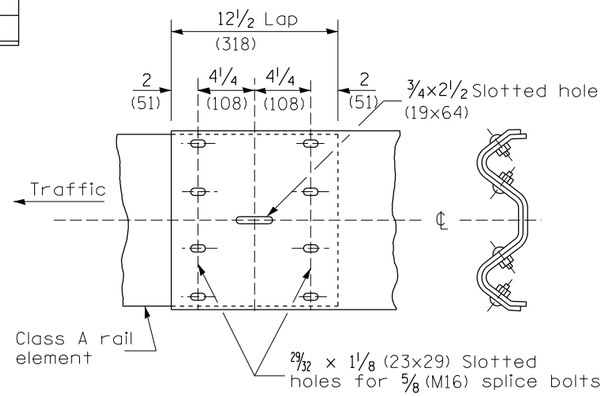

RAIL ELEMENT SPLICE

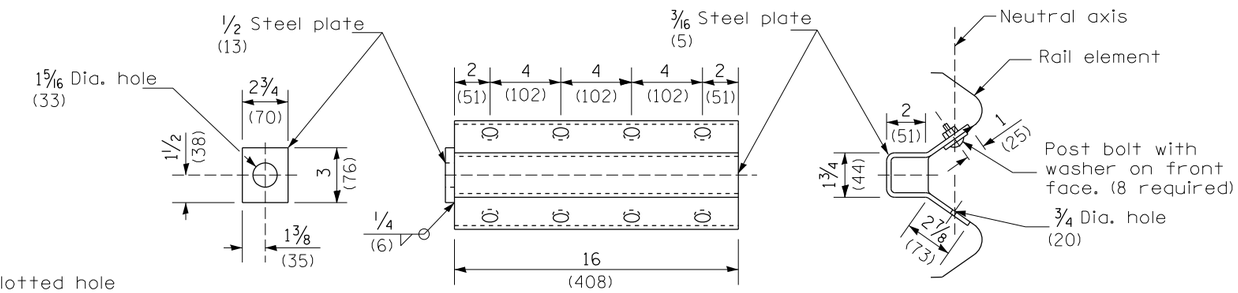

NOTE

Anchor plate T shall be used to attach cable assembly to guardrail when required on traffic barrier terminals.

ANCHOR PLATE T DETAILS

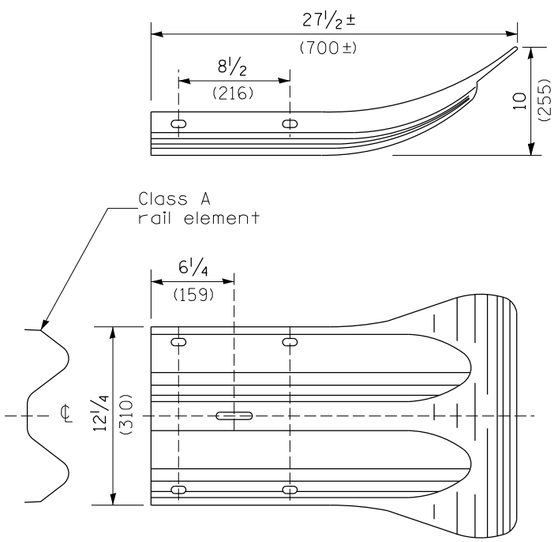

END SECTION

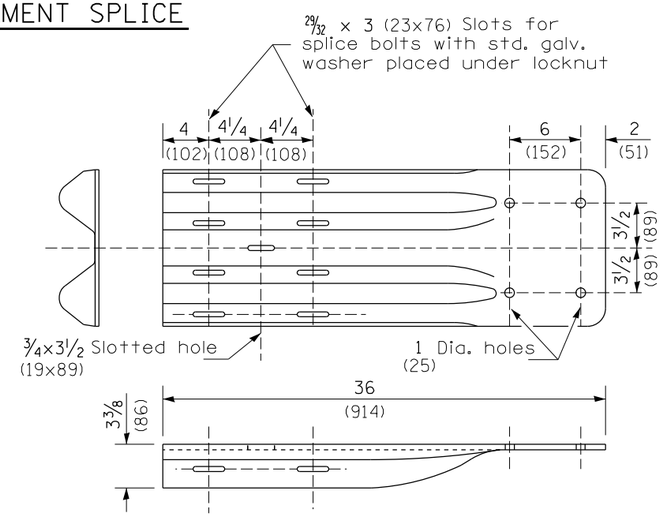

NOTE

When end shoe is attached to a bridge parapet which has an expansion joint, the bolts shall be provided with a locknut or double nut and shall be tightened only to a point that will allow guardrail movement.

The standard end shoe shall be attached to the concrete with pre-drilled or self-drilling anchor bolts. The anchor cone shall be set flush with the surface of the concrete.

Externally threaded studs protruding from the surface of the concrete will not be permitted.

END SHOE

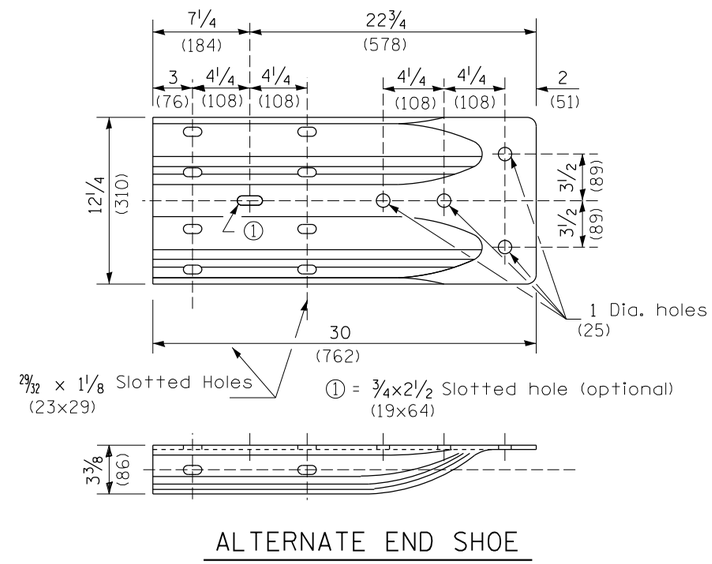

ALTERNATE END SHOE

All dimensions are in inches (millimeters) unless otherwise noted.

MODEL: Default
FILE NAME: P:\Civil_IDOT_DIST4\PTB 194-035 var PH I\31200323\WO 10 Airport Road Phase 2 31200323-10\CAD Sheets\0468886-sht-sctdb.dgn

The Upchurch Group
architects engineers surveyors
Professional Design Firm Corporation
License No. 184-003-001
123 North 15th Street
Mattoon, IL 61938
Phone: 217.235.3177
e-mail: upchurchgroup@upchurchgroup.com

USER NAME = Sta42	DESIGNED - MJS	REVISED -	
TUG PROJECT NO. 31200323-10	DRAWN -	REVISED -	
PLOT SCALE = 100.0000 ' / in.	CHECKED - MJS	REVISED -	
PLOT DATE = 6/20/2023	DATE -	REVISED -	

STATE OF ILLINOIS
DEPARTMENT OF TRANSPORTATION

STEEL PLATE BEAM GUARDRAIL, TYPE A, 6.75 FOOT POSTS

NOT TO SCALE

SHT. 3 OF 4
CADD STD. 630011-D4

F.A.I. RTE.	SECTION	COUNTY	TOTAL SHEETS	SHEET NO.
474	(72-3HB-4)BR	PEORIA	175	150
		CONTRACT NO. 68886		
	ILLINOIS	FED. AID PROJECT		

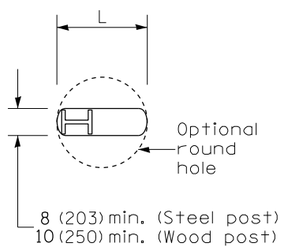

PLAN

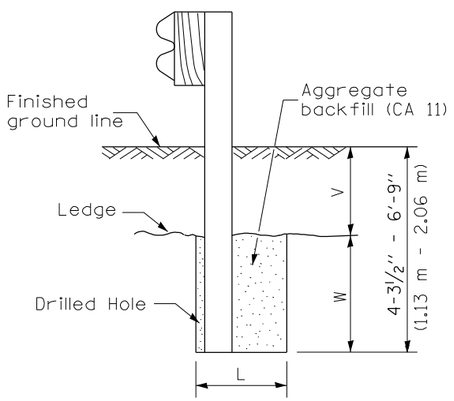

Note:
Ledge line is top of rock ledge or hard slag fill.

ELEVATION

FOOTING FOR POST WHEN IMPERVIOUS MATERIAL IS ENCOUNTERED

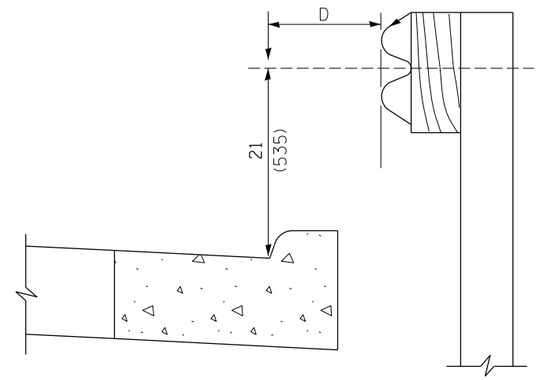

Note:
If it is necessary for D to be more than 12 (300) and less than 10'-0" (3.0 m) type M-2 (M-5) curb and gutter (Std. 606001) shall be used in front of and in advance of the guardrail.

GUARDRAIL PLACED BEHIND CURB

(D = 0 desirable to 12 (300) maximum)

V	W	L	
		Steel Post	Wood Post
0 - 18 (0 - 460)	24 (610)	21 (530)	23 (580)
>18 - 41.5 (>460 - 825)	12 (305)	8 (203)	10 (250)
>41.5 - 53.5 (>825 - 1.13 m)	12 - 0 (305 - 0)	8 (203)	10 (250)

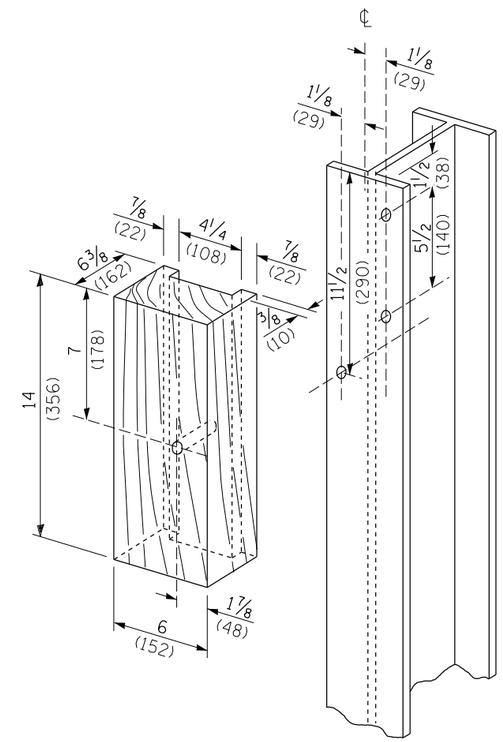

WOOD BLOCK-OUT AND STEEL POST DETAILS

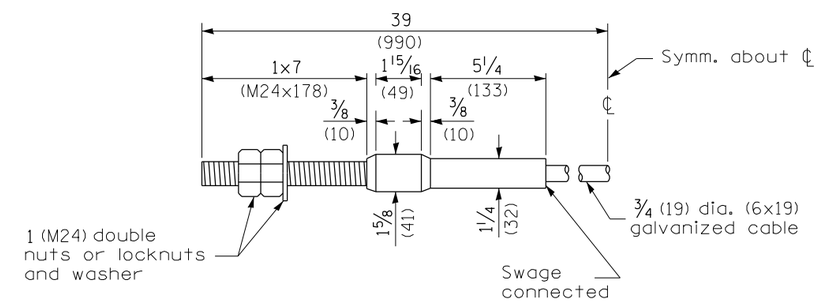

CABLE ASSEMBLY

(18,100 kg (40,000 lbs.) min. breaking strength)
Tighten to taut tension.

All dimensions are in inches (millimeters) unless otherwise noted.

MODEL: Default
FILE NAME: P:\Civil\ IDOT DIST4\PTB 194-035 var PH I-II 3120032\WO 10 Airport Road Phase 2 3120032-10\CAD Sheets\0468886-sht-ctb.dgn

The Upchurch Group
architects engineers surveyors
Professional Design Firm Corporation License No. 184-003401
123 North 15th Street Mattoon, IL 61938
Phone: 217.235.3177
e-mail: upchurchgroup@upchurchgroup.com

USER NAME = Sta42	DESIGNED - MJS	REVISED -	
TUG PROJECT NO. 3120032-10	DRAWN -	REVISED -	
PLOT SCALE = 100.0000 ' / in.	CHECKED - MJS	REVISED -	
PLOT DATE = 6/20/2023	DATE -	REVISED -	

STATE OF ILLINOIS
DEPARTMENT OF TRANSPORTATION

STEEL PLATE BEAM GUARDRAIL, TYPE A, 6.75 FOOT POSTS

NOT TO SCALE

SHT. 4 OF 4
CADD STD. 630011-D4

F.A.I. RTE.	SECTION	COUNTY	TOTAL SHEETS	SHEET NO.
474	(72-3HB-4)BR	PEORIA	175	151
		CONTRACT NO. 68886		
	ILLINOIS	FED. AID PROJECT		

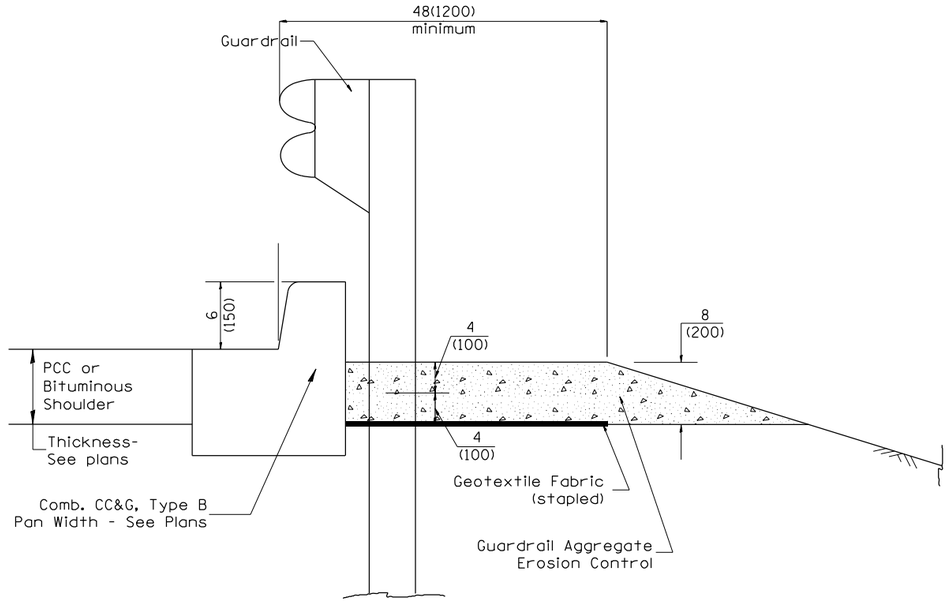

TYPICAL SECTION WITH COMBINATION CONCRETE CURB & GUTTER

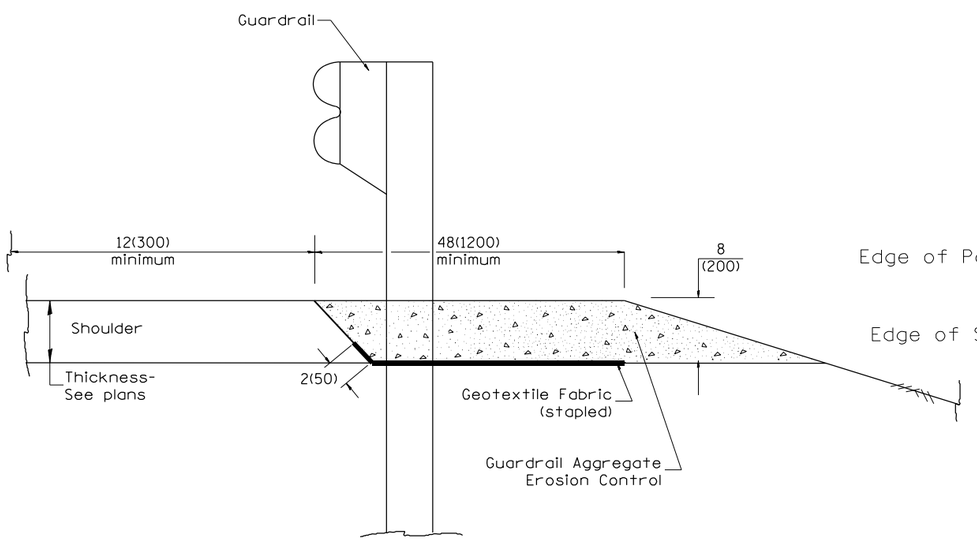

TYPICAL SECTION WITHOUT EROSION CONTROL CURB

GENERAL NOTES: GUARDRAIL AGGREGATE EROSION CONTROL

1. This work shall consist of grading as needed, furnishing and installing geotextile fabric and staples, and furnishing, placing and shaping crushed aggregate around and behind Steel Plate Beam Guardrail posts in accordance with Plan Details.

2. Before placing the aggregate and the Geotextile Fabric, weeds and grass shall be removed from the area to be covered.

3. After the area has been prepared, and in a dry condition, the Geotextile fabric shall be placed with a 12(300) minimum overlap. A knife cut for guardrail post installation is necessary.

4. The aggregate shall be deposited, compacted and shaped by either mechanical or hand methods, in a manner reasonably true to line and grade.

5. The Contractor shall have the option of placing the guardrail before or after the Geotextile Fabric and Aggregate are in place. If the guardrail is placed after the Geotextile Fabric and Aggregate, then any voids must be filled and the aggregate returned to line and grade.

6. Materials shall meet the following requirements:

   A. The crushed aggregate shall be CA1 gradation in accordance with Article 1004.01(c) of the Standard Specifications.

   B. The Geotextile Fabric shall be nonwoven fabric in accordance with Article 1080.02 of the Standard Specifications.

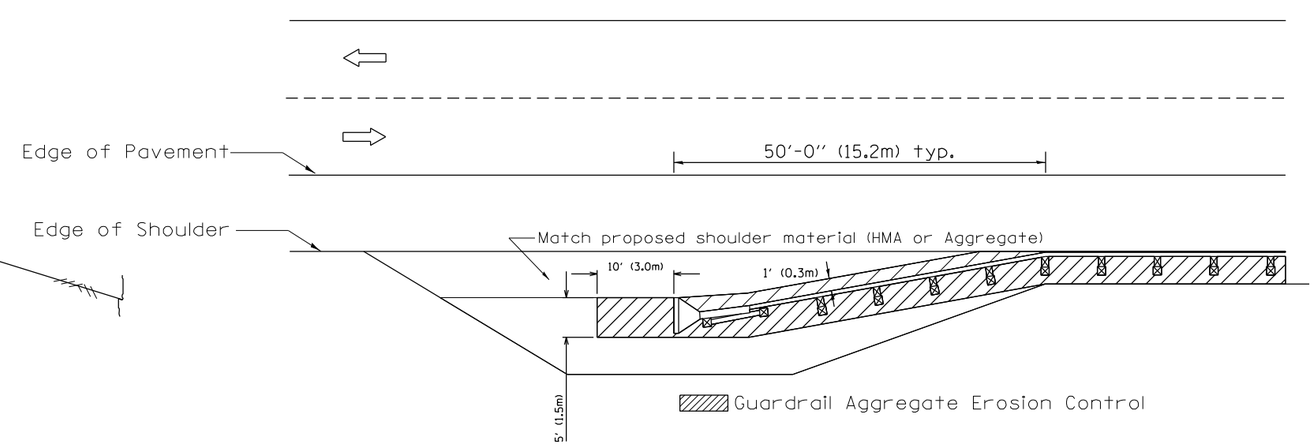

All dimensions are in inches (millimeters) unless otherwise noted.

DESIGNER NOTES:

1. CONSIDER USING A "B" CURB PAY ITEM AT GUARDRAIL INSTALLATIONS WHERE GRADES ARE EQUAL TO OR GREATER THAN 1% AND AT INLETS. (INCLUDE DISTRICT SPECIAL PROVISION)
2. USE "GUARDRAIL AGGREGATE EROSION CONTROL" AT GUARDRAIL INSTALLATIONS WHERE GRADES ARE LESS THAN 1% (INCLUDE DISTRICT SPECIAL PROVISION).
3. INCLUDE STATE STANDARD 610001, IF APPLICABLE.
4. INCLUDE THE FOLLOWING DISTRICT CADD STANDARDS AS NEEDED: SLOPE DRAINS FOR EXPOSED PIPES; SLOPE DRAINS FOR BURIED PIPES; SEEPAGE COLLARS FOR BURIED PIPES SEEPAGE COLLARS FOR EXPOSED PIPES; CONCRETE THRUST BLOCKS AND PIPE ELBOW.
5. INCLUDE DISTRICT SPECIAL PROVISION - "AGGREGATE QUALITY" FOR PROJECTS LOCATED IN THE WESTERN AREA OF THE DISTRICT - APPROX. DIVIDING LINE IS IL 97.
6. DELETE DESIGNER NOTES WHEN INSERTING INTO PLAN FILES.
7. OPERATIONS PREFERS USE OF PIPE OUTLETTING ONTO FORESLOPE WITH RIPRAP. USE NON-METALLIC PIPE WHEN POSSIBLE BECAUSE OF FUTURE CORROSION ISSUES.
8. IF NO OTHER SEEDING IS PAID FOR ON THE CONTRACT, USE DISTRICT SPECIAL PROVISION FOR SEEDING, MINOR AREAS

MODEL: Default
FILE NAME: P:\Civil\IDOT District 4\Proj\Sta42\68886\Sta42_GR_Erosion_Control.dgn

The Upchurch Group
architects engineers surveyors
Professional Design Firm Corporation License No. 184-003-001
123 North 15th Street
Mattoon, IL 61938
Phone: 217.235.3177
e-mail: upchurchgroup@upchurchgroup.com

USER NAME = Sta42	DESIGNED - MJS	REVISED -	
TUG PROJECT NO. 3120032-10	DRAWN -	REVISED -	
PLOT SCALE = 100.0000 ' / in.	CHECKED - MJS	REVISED -	
PLOT DATE = 6/20/2023	DATE -	REVISED -	

STATE OF ILLINOIS
DEPARTMENT OF TRANSPORTATION

GUARDRAIL EROSION CONTROL TREATMENTS

NOT TO SCALE

SHT. 1 OF 2
CADD STD. 630101-D4

F.A.I. RTE.	SECTION	COUNTY	TOTAL SHEETS	SHEET NO.
474	(72-3HB-4)BR	PEORIA	175	152
		CONTRACT NO. 68886		
	ILLINOIS	FED. AID PROJECT		

DETAIL "A"

#4 reinforcement bars may be cast in PCC apron and precast inlet box or drilled and anchored with an approved chemical adhesive at 2' spacing. Cost of curb and reinforcement are included in the cost of shoulder inlet.

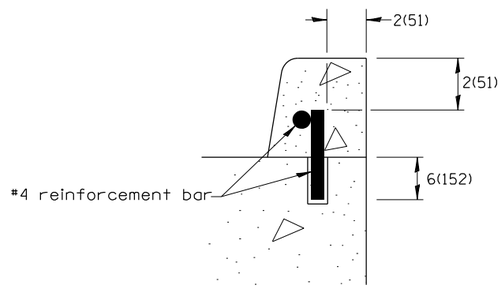

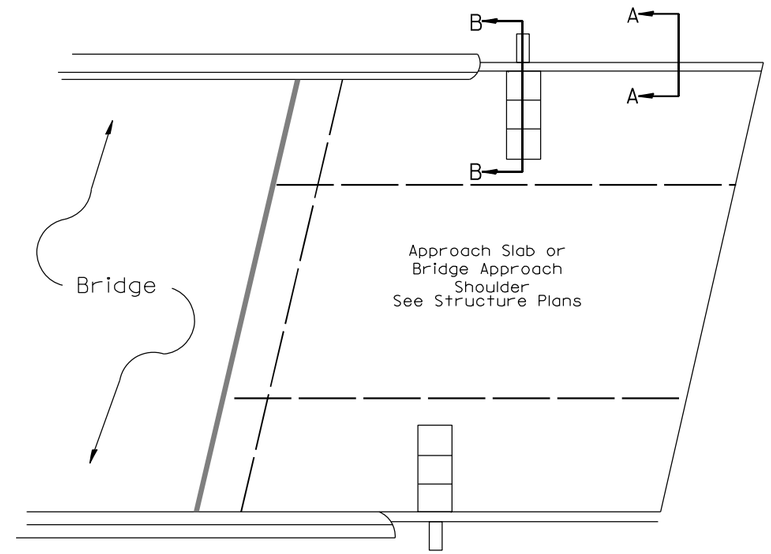

PLAN VIEW

APPROACH SLAB OR SHOULDER PLACEMENT

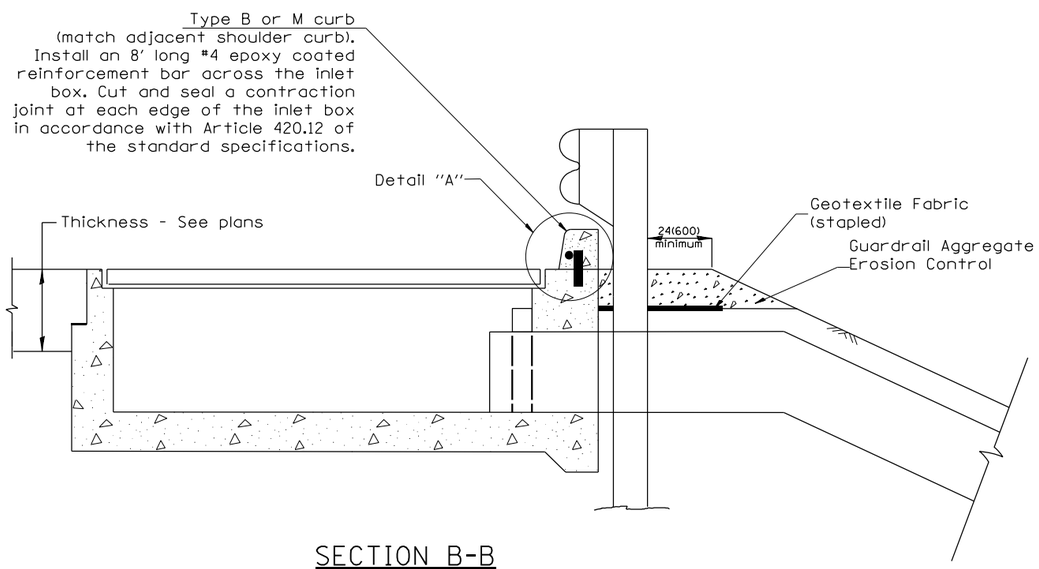

SECTION B-B

TYPICAL SECTION AT INLETS

TYPE E, F & G (HIGHWAY STANDARD 610001)

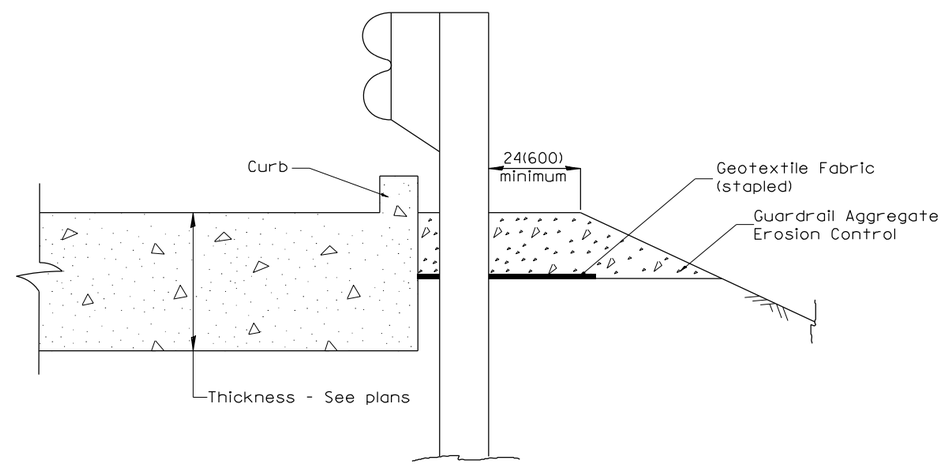

SECTION A-A

TYPICAL SECTION WITH BRIDGE APPROACH CURB

All dimensions are in inches (millimeters) unless otherwise noted.

MODEL: Default
FILE NAME: P:\Civil\ IDOT DISTAUPTB 194-035 var PH I-II 3120032\WO 10 Airport Road Phase 2 3120032-10\CAD Sheets\D468886-sht-rdb.dgn

The Upchurch Group architects engineers surveyors	USER NAME = Sta42	DESIGNED - MJS	REVISED -	STATE OF ILLINOIS DEPARTMENT OF TRANSPORTATION	GUARDRAIL EROSION CONTROL TREATMENTS
Professional Design Firm Corporation License No. 184-003-001 e-mail: upchurchgroup@upchurchgroup.com; 123 North 15th Street Mattoon, IL 61938 Phone: 217.235.3177	TUG PROJECT NO. 3120032-10	DRAWN -	REVISED -		
	PLOT SCALE = 100.0000 ' / in.	CHECKED - MJS	REVISED -		SHT. 2 OF 2
	PLOT DATE = 6/20/2023	DATE -	REVISED -		NOT TO SCALE — CADD STD. 630101-D4

F.A.I. RTE.	SECTION	COUNTY	TOTAL SHEETS	SHEET NO.
474	(72-3HB-4)BR	PEORIA	175	153
		CONTRACT NO. 68886		
	ILLINOIS	FED. AID PROJECT		

PERMANENT SURVEY TIES

○ Permanent Survey Tie
□ Section Corner, 1/4 Corner, or other land corner.

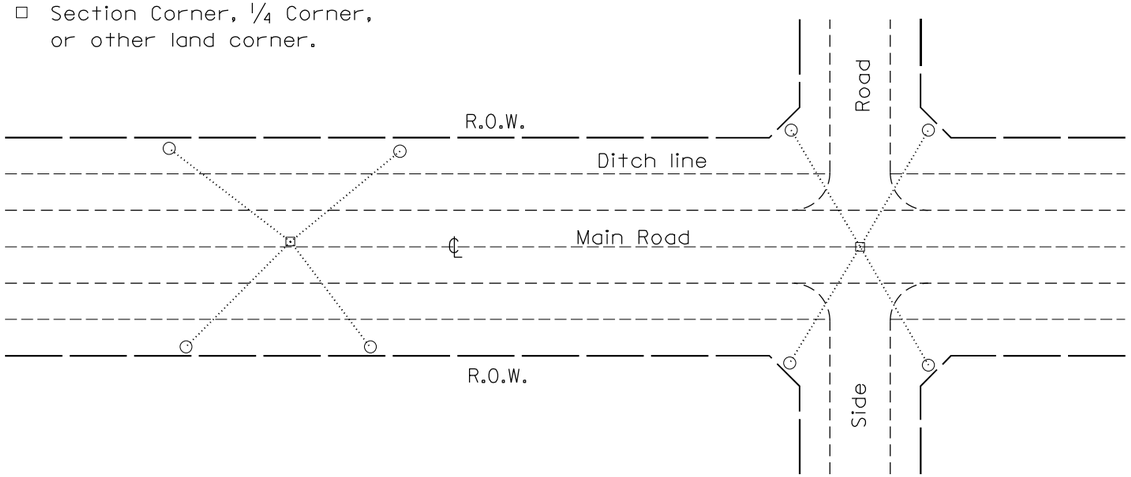

TYPICAL APPLICATION

GENERAL NOTES

1. The marker shall be cast in place of Class SI Concrete.
2. Tie marker shall be installed after the final seeding has been completed unless otherwise specified by the Engineer.
3. The tie distances to the section corner shall be measured and recorded by the surveyor setting the PSM. All ties shall be turned over to the IDOT Chief of Surveys or Chief of Plats after recordation.
4. All documentation shall be performed by a PLS
5. The metal tablet used on permanent survey markers shall be made of bronze.

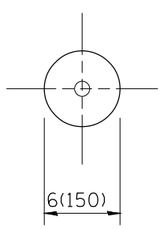

PLAN

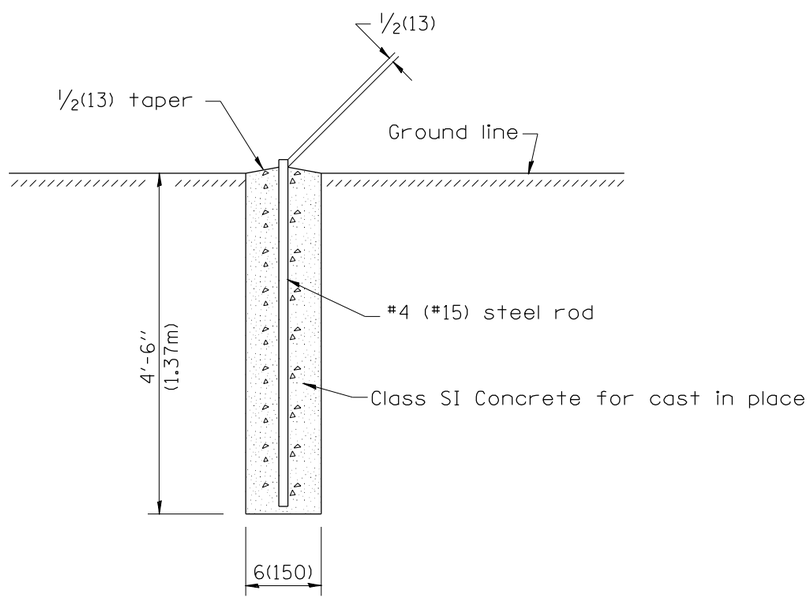

SECTION

PERMANENT SURVEY MARKERS

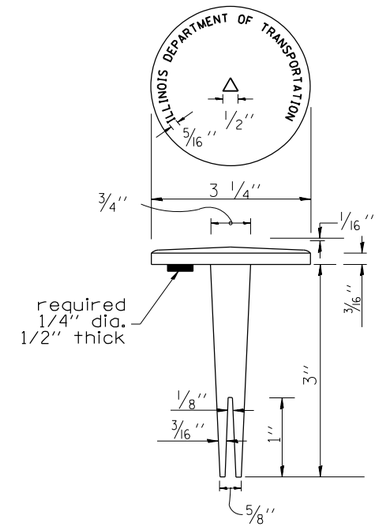

BRASS TABLET

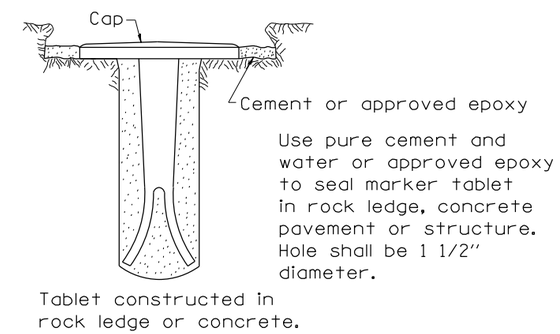

TYPE I

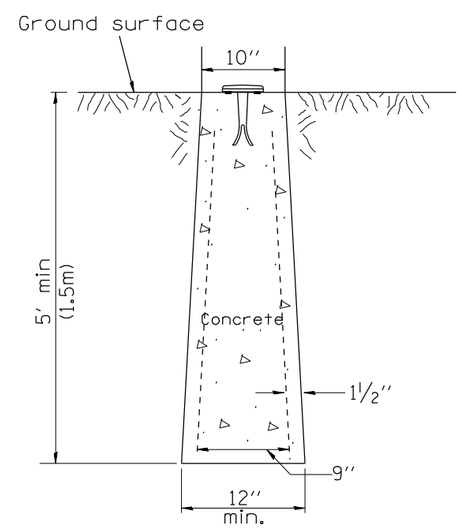

TYPE II
CAST-IN-PLACE MARKER

GENERAL NOTES

1. All type II markers shall be cast in place, and precast markers will not be allowed.
2. Two permanent magnets, each having a diameter of 3/4 (19) and a thickness of 1/4 (6), or equivalent, shall be attached to the underside of the tablet with an approved epoxy bonding agent.
3. The location of the markers shall be in accordance with the plans in general, the markers will be placed at the P.T.'s, P.C.'s, and P.I.'s llocated within the R.O.W. of horizontal curves and spaces along the tangents in a way that a minimum of two markers are always inter-visible, and not to exceed 1000' (300m).
4. The markers shall be placed under the direction of the Engineer and shall be installed in a workmanlike manner in order that there will be no further settlement or horizontal shifting. The monuments shall be placed in a way that the survey point will fall within the portion of the plaque provided for that purpose.
5. The project designation, the centerline station, the survey point, and the elevation shall be permanently marked by the use of metal dies after marker has been installed.

All dimensions are in inches (millimeters) unless otherwise noted.

DESIGNER NOTES:
1. ADD DISTRICT SPECIAL PROVISION IF PLACING A TYPE 1 MARKER ON A STRUCTURE.
2. MODIFIES STATE STD 667101. DON'T USE STATE STD IF USING CADD STANDARD
3. PERMANENT SURVEY MARKERS SHALL BE PLACED TO PERPETUATE THE SURVEY LINES OF DIVIDED HIGHWAYS AND THE CENTERLINE OF ALL OTHERS WHERE THESE LINES HAVE BEEN ESTABLISHED BY SURVEY.
4. PERMANENT SURVEY MARKERS SHALL BE PLACED AT ALL LAND SECTION CORNERS WITHIN THE STATE R.O.W. WHERE THE MONUMENTS HAVE BEEN FOUND OR RELOCATED BY SURVEY.

MODEL: Default
FILE NAME: P:\CIVIL\IDOT DIST4\proj\68886-in-sds.dgn

The Upchurch Group architects engineers surveyors Professional Design Firm Corporation License No. 184-003-001 123 North 15th Street Mattoon, IL 61938 Phone: 217.235.3177 e-mail: upchurchgroup@upchurchgroup.com	USER NAME = Sta42	DESIGNED - MJS	REVISED -	STATE OF ILLINOIS DEPARTMENT OF TRANSPORTATION	PERMANENT SURVEY TIE & PERMANENT SURVEY MARKERS TY.I – TY.II
	TUG PROJECT NO. 3120032-10	DRAWN -	REVISED -		
	PLOT SCALE = 100.0000 ' / in.	CHECKED - MJS	REVISED -		NOT TO SCALE — CADD STD. 667101-D4
	PLOT DATE = 6/20/2023	DATE -	REVISED -		

F.A.I. RTE.	SECTION	COUNTY	TOTAL SHEETS	SHEET NO.
474	(72-3HB-4)BR	PEORIA	175	154
		CONTRACT NO. 68886		
	ILLINOIS	FED. AID PROJECT		

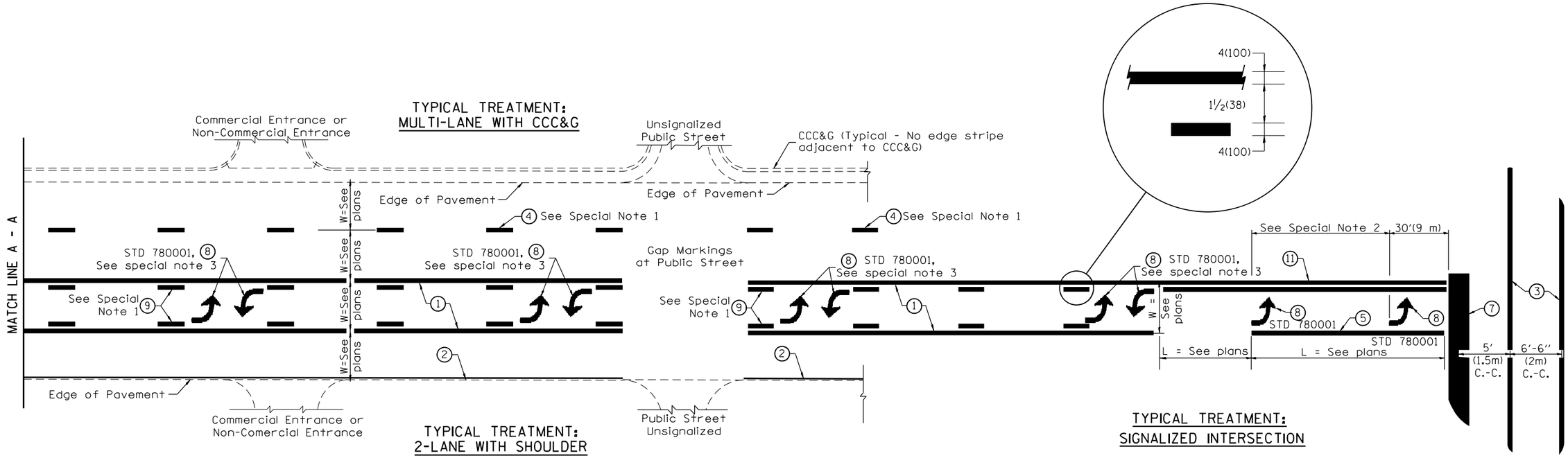

FLUSH PAVED MEDIAN: TWO-WAY LEFT TURN LANE WITH ONE-WAY LEFT TURN LANE AT SIGNALIZED INTERSECTION

TYPICAL PAVEMENT MARKING LEGEND

(Note: This is a District Standard Legend.
Some elements may not apply to specific project.)

1. 4(100) Solid (Yellow)
2. 4(100) Solid (White)
3. 2-6(150) Crosswalk @ 6'-6" (2m)min C.-C. (White)
   2-8(200) Crosswalk @ 6'-6" (2m)min C.-C. (White) (When traffic signals are present.)
4. 6(150) Skip-Dash (White) — 10' (3.05m) / 30' (9.14m) / 10' (3.05m) (See Special Note 1)
5. 8(200) Solid (White)
6. 12(300) Diagonal (White) (Item 6 is shown on Std. 780001)
7. 24(600) Stop Bar (White)
8. Letters & Arrows — 33' (10m) (See Std. 780001 and Special Notes 2 & 3)
9. 4(100) Skip-Dash (Yellow) — 10' (3.05m) / 30' (9.14m) / 10' (3.05m) (See Special Note 1)
10. 12(300) Diagonal (Yellow) (See Table A) — 45°
11. 4(100) Double Solid (Yellow) — 11(280) C.-C. — See Table A

SPECIAL NOTES

1. Skip-Dash markings will be centered between both ends of city blocks and shall be placed in alignment transversely across the pavement.
2. The following shall apply to arrows located in one-way left turn lanes:
   A. A minimum of two (2) arrows is required.
   B. The maximum spacing between arrows is 80' (24 m).
   C. Arrows shall be evenly spaced if three (3) or more are required.
3. The following shall apply to arrow pairs located in two-way left turn lanes:
   A. A minimum of two (2) arrow pairs is required.
   B. The maximum spacing between arrow pairs is 200' (61 m).
   C. Arrow pairs shall be evenly spaced if three (3) or more are required.
   D. The spacing between Bi Directional Left Turn Arrows is 33' (10 m).

GENERAL NOTES

1. Refer to State Standard 780001 for additional Pavement Markings including letters & arrows.
2. See Plans for Pavement Markings adjacent to curbed islands and medians, and through lane reductions.
3. Refer to Article 780.13 for letter, number and symbol areas (sq. ft.)
4. Areas are grooved 1" beyond each edge for the following symbols:
   Through Arrow= 14.8 sq. ft.
   Large Left or Right Arrow= 21.9 sq. ft.
   2 Arrow Combination Left (or Right) and Through= 34.9 sq. ft.
   Wrong Way Arrow= 29.5 sq. ft.
   Railroad Crossing Symbol= 69.8 sq. ft.
   (For further information, refer to BDE Special Provision: Grooving for Recessed Pavement Markings)

DESIGNER NOTES:
1. Includes Sign Bridge Structure 780001 (Call Pavement Markings)

MODEL: Default
FILE NAME: P:\CHR_IDOT_DIST4\PB 194-035 var PH III 3120032\WD 10 Airport Road Phase 2 3120032-10\CAD Sheets\0468868-sht-pm.dgn

The Upchurch Group
architects engineers surveyors
Professional Design Firm Corporation License No. 184-000401
123 North 15th Street Mattoon, IL 61938 Phone: 217.235.3177
e-mail: upchurchgroup@upchurchgroup.com

USER NAME = Sta42	DESIGNED - MJS	REVISED -
TUG PROJECT NO. 3120032-10	DRAWN -	REVISED -
PLOT SCALE = 100.0000 ' / in.	CHECKED - MJS	REVISED -
PLOT DATE = 6/20/2023	DATE -	REVISED -

STATE OF ILLINOIS
DEPARTMENT OF TRANSPORTATION

TYPICAL PAVEMENT MARKINGS

NOT TO SCALE

SHT. 1 OF 2
CADD STD. 780001-D4

F.A.I. RTE.	SECTION	COUNTY	TOTAL SHEETS	SHEET NO.
474	(72-3HB-4)BR	PEORIA	175	155
		CONTRACT NO. 68886		
	ILLINOIS	FED. AID PROJECT		

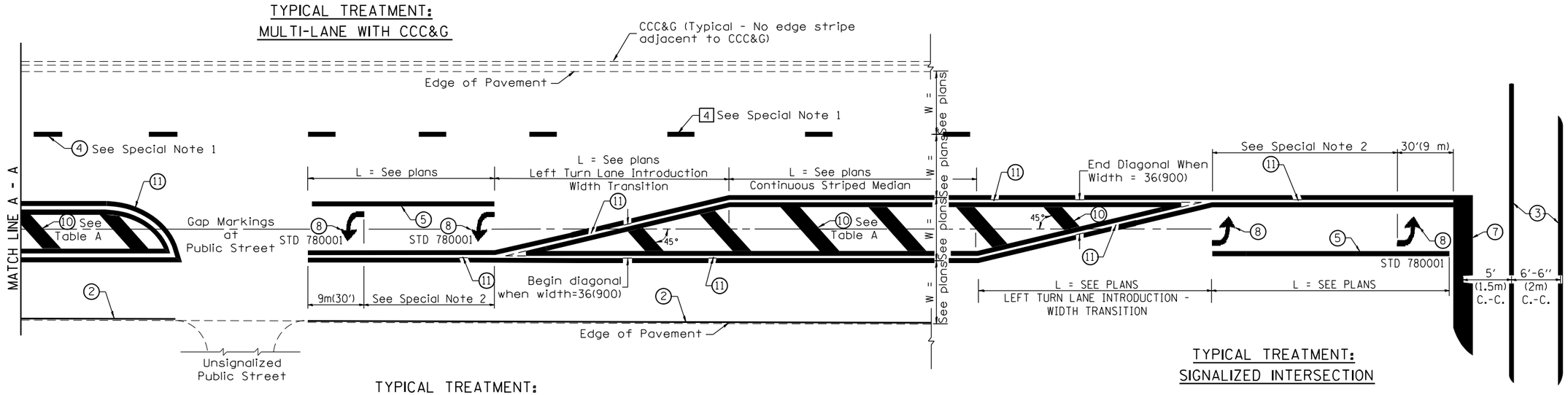

FLUSH PAVED MEDIAN: RESTRICTED LEFT TURN LANE

TABLE A

RECOMMENDED SPACING BETWEEN DIAGONAL LINES

SPEED LIMIT RANGE	CONTINUOUS	INTERSECTION CHANNELIZATION (Includes Width Transitions for Median and Left Turn Lane Introductions)
Less Than 30 mph (50 km/h)	50' (15m)	15' (5m)
30 - 45 mph (50 - 70 km/h)	75' (23m)	20' (6m)
Over 45 mph (70 km/h)	150' (46m)	30' (9m)

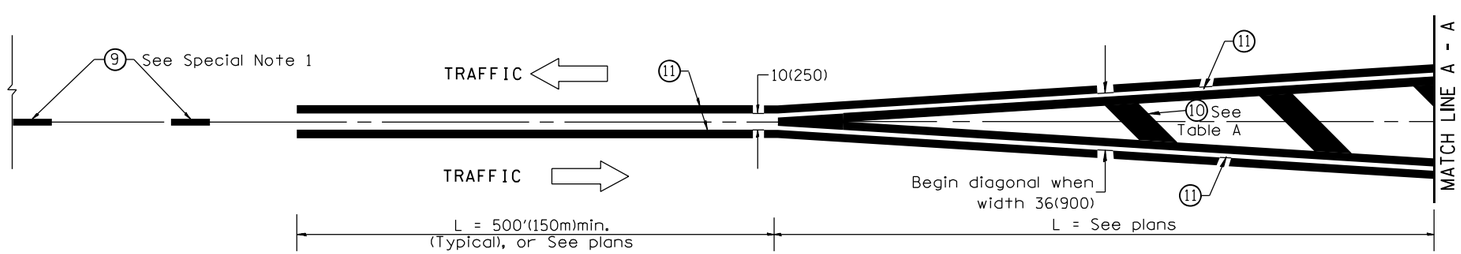

MEDIAN INTRODUCTION - WIDTH TRANSITIONS

All dimensions are in inches (millimeters) unless otherwise noted.

MODEL: Default
FILE NAME: P:\Civil_IDOT_DIST4\PTB 194-035 var PH I-II 3120032\WO 10 Airport Road Phase 2 3120032-10\CAD Sheets\D1488886-PH-sht5.dgn

The Upchurch Group
architects engineers surveyors
Professional Design Firm Corporation License No. 184-001001
123 North 15th Street Mattoon, IL 61938 Phone: 217.235.3177
e-mail: upchurchgroup@upchurchgroup.com

USER NAME = Sta42	DESIGNED - MJS	REVISED -	
TUG PROJECT NO. 3120032-10	DRAWN -	REVISED -	
PLOT SCALE = 100.0000 ' / in.	CHECKED - MJS	REVISED -	
PLOT DATE = 6/20/2023	DATE -	REVISED -	

STATE OF ILLINOIS
DEPARTMENT OF TRANSPORTATION

TYPICAL PAVEMENT MARKINGS

NOT TO SCALE

SHT. 2 OF 2
CADD STD. 780001-D4

F.A.I. RTE.	SECTION	COUNTY	TOTAL SHEETS	SHEET NO.
474	(72-3HB-4)BR	PEORIA	175	156
		CONTRACT NO. 68886		
		ILLINOIS	FED. AID PROJECT	

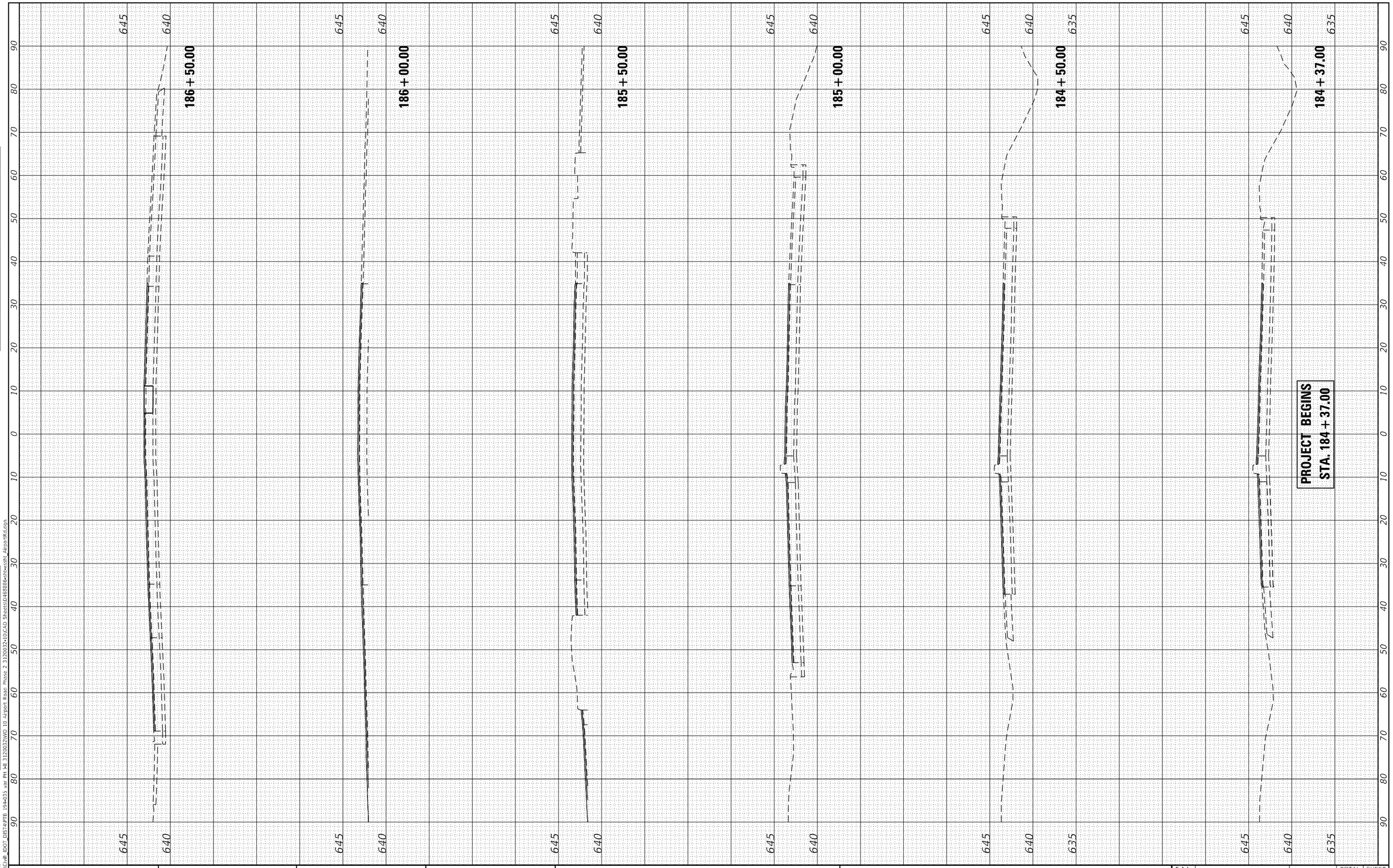

FINAL SURVEY		BY	DATE
NOTE BOOK	SURVEYED		
	PLOTTED		
	TEMPLATE		
	AREAS		
NO.	AREAS CHECKED		

ORIGINAL SURVEY		BY	DATE
NOTE BOOK	SURVEYED		
	PLOTTED		
	TEMPLATE		
	AREAS		
NO.	AREAS CHECKED		

MODEL: Default
FILE NAME: P:\Civil_IDOT_DIST4\PTB 194-035 var PH I\3120032\WO 10 Airport Road Phase 2 3120032-10\CAD Sheets\D468886-sht-xsSht AirportRd.dgn

The Upchurch Group
architects engineers surveyors
Professional Design Firm Corporation License No. 184-001401
123 North 15th Street Mattoon, IL 61938
Phone: 217.235.3177
e-mail: upchurchgroup@upchurchgroup.com

USER NAME = Sta42	DESIGNED -	REVISED -
TUG PROJECT NO. 3120032-10	DRAWN -	REVISED -
PLOT SCALE = 20.0000 ' / in.	CHECKED -	REVISED -
PLOT DATE = 6/19/2023	DATE -	REVISED -

STATE OF ILLINOIS
DEPARTMENT OF TRANSPORTATION

CROSS SECTIONS – AIRPORT ROAD
AIRPORT ROAD OVER I-474

SCALE: | SHEET OF SHEETS | STA. 184+37.00 TO STA. 186+50.00

F.A.I RTE.	SECTION	COUNTY	TOTAL SHEETS	SHEET NO.
474	(72-3HB-4)BR	PEORIA	175	157
		CONTRACT NO. 68886		
		ILLINOIS	FED. AID PROJECT	

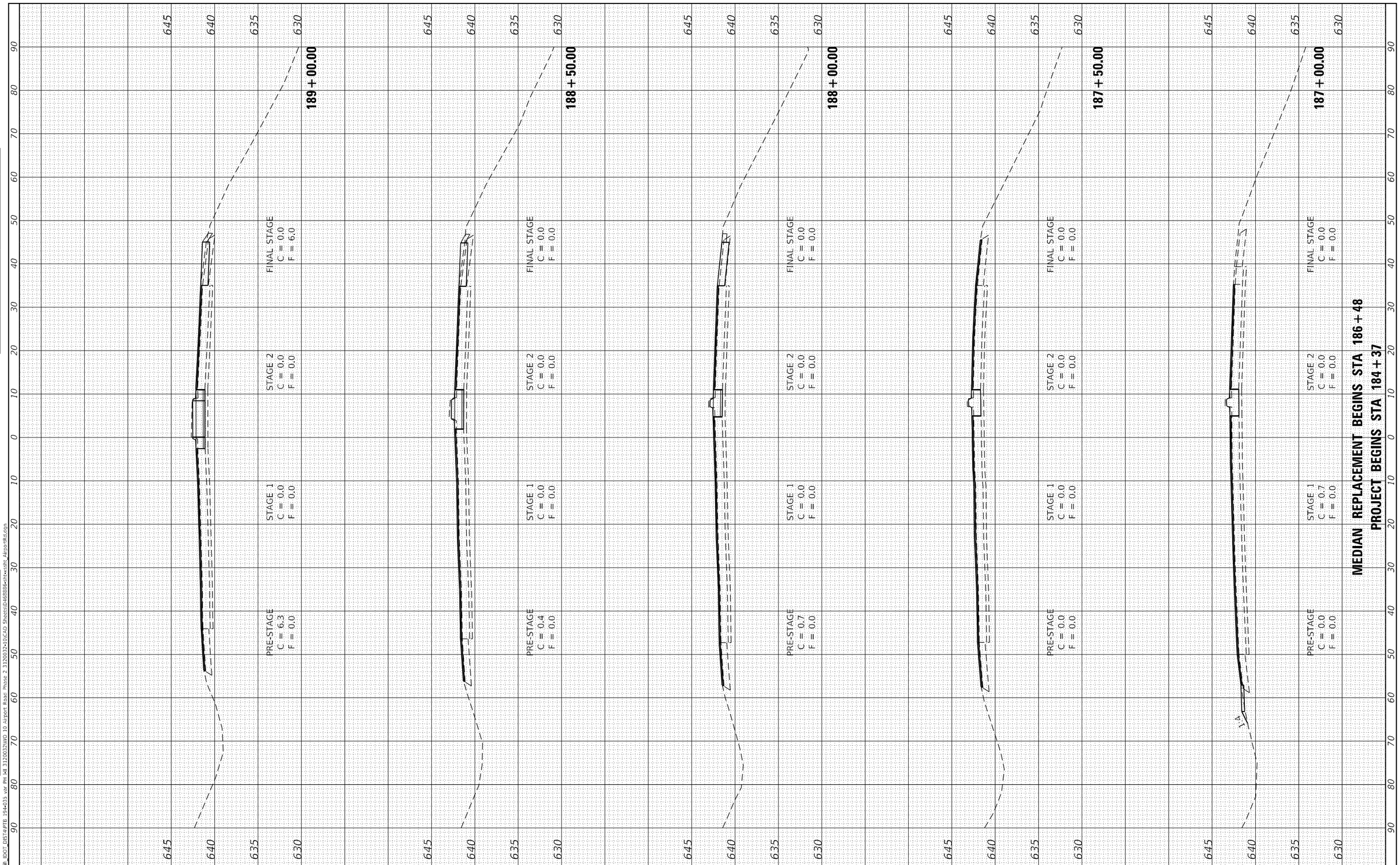

MEDIAN REPLACEMENT BEGINS STA 186+48
PROJECT BEGINS STA 184+37

FINAL SURVEY	BY	DATE
SURVEYED		
PLOTTED		
TEMPLATE		
AREAS		
AREAS CHECKED		
NOTE BOOK NO.		

ORIGINAL SURVEY	BY	DATE
SURVEYED		
PLOTTED		
TEMPLATE		
AREAS		
AREAS CHECKED		
NOTE BOOK NO.		

MODEL: Default
FILE NAME: P:\Civil\IDOT DIST4\PTB 194-035 var PH III 3120032\WO 10 Airport Road Phase 2 3120032-10\CAD Sheets\D468886-sht-xsht AirportRd.dgn

The Upchurch Group
architects engineers surveyors
Professional Design Firm Corporation
License No. 184-003401
123 North 15th Street
Mattoon, IL 61938
Phone: 217.235.3177
e-mail: upchurchgroup@upchurchgroup.com

USER NAME = Sta42	DESIGNED -	REVISED -
TUG PROJECT NO. 3120032-10	DRAWN -	REVISED -
PLOT SCALE = 20.0000 ' / in.	CHECKED -	REVISED -
PLOT DATE = 6/19/2023	DATE -	REVISED -

STATE OF ILLINOIS
DEPARTMENT OF TRANSPORTATION

CROSS SECTIONS – AIRPORT ROAD
AIRPORT ROAD OVER I-474

SCALE: | SHEET OF SHEETS | STA. 187+00.00 TO STA. 189+00.00

F.A.I RTE.	SECTION	COUNTY	TOTAL SHEETS	SHEET NO.
474	(72-3HB-4)BR	PEORIA	175	158

CONTRACT NO. 68886

ILLINOIS | FED. AID PROJECT

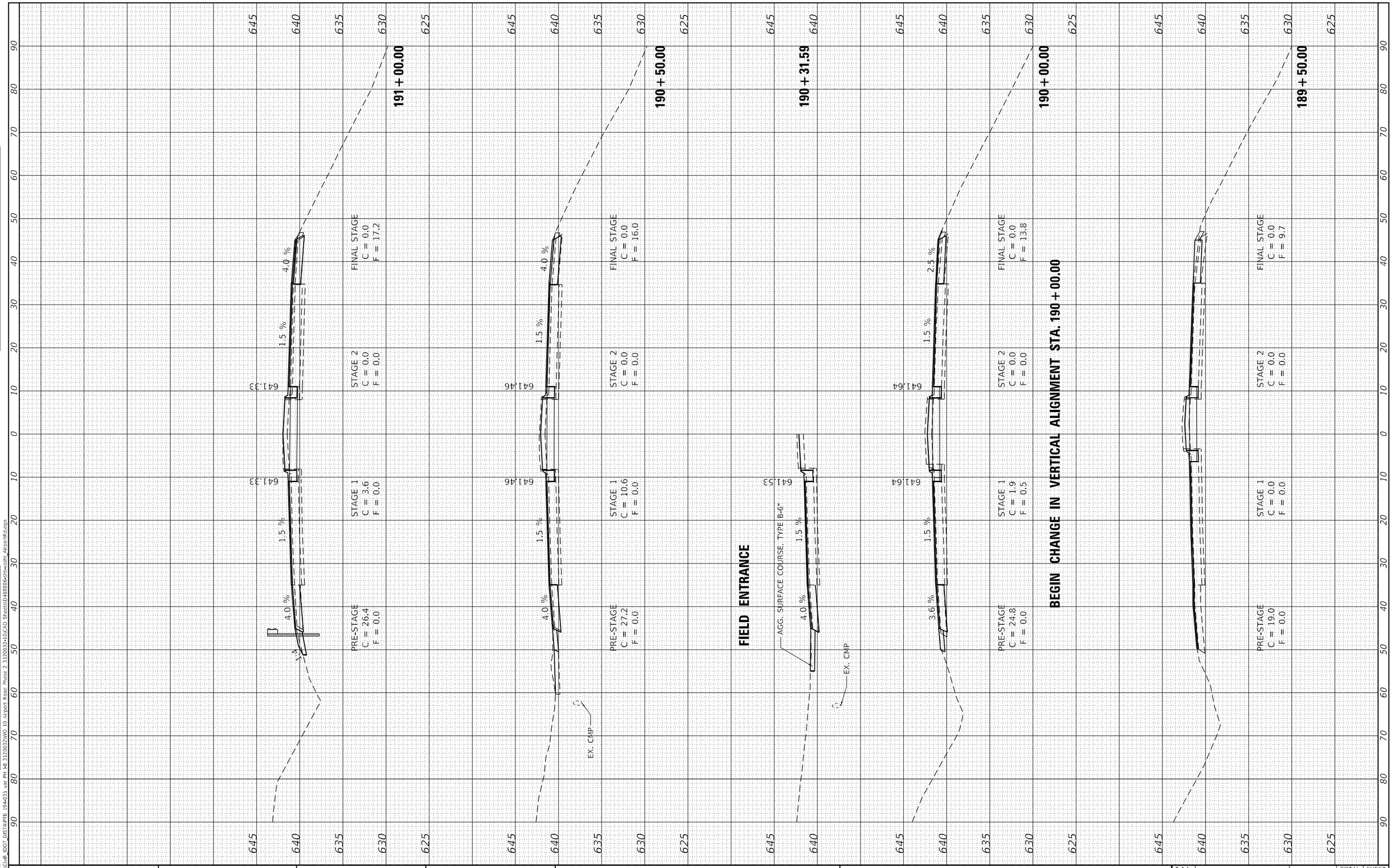

FINAL SURVEY		BY	DATE
NOTE BOOK	SURVEYED		
	PLOTTED		
	TEMPLATE		
	AREAS		
	AREAS CHECKED		
NO.			

ORIGINAL SURVEY		BY	DATE
NOTE BOOK	SURVEYED		
	PLOTTED		
	TEMPLATE		
	AREAS		
	AREAS CHECKED		
NO.			

MODEL: Default
FILE NAME: P:\Civil\IDOT DIST4\PTB 159-035 var PH III 3120032\WO 10 Airport Road Phase 2 3120032-10\CAD Sheets\D488886-sht-xsht AirportRd.dgn

The Upchurch Group
architects engineers surveyors
Professional Design Firm Corporation
License No. 184-003401
123 North 15th Street
Mattoon, IL 61938
Phone: 217.235.3177
e-mail: upchurchgroup@upchurchgroup.com

USER NAME = Sta42	DESIGNED -	REVISED -
TUG PROJECT NO. 3120032-10	DRAWN -	REVISED -
PLOT SCALE = 20.0000 ' / in.	CHECKED -	REVISED -
PLOT DATE = 6/19/2023	DATE -	REVISED -

STATE OF ILLINOIS
DEPARTMENT OF TRANSPORTATION

CROSS SECTIONS – AIRPORT ROAD
AIRPORT ROAD OVER I-474

SCALE: | SHEET OF SHEETS | STA. 189+50.00 TO STA. 191+00.00

F.A.I RTE.	SECTION	COUNTY	TOTAL SHEETS	SHEET NO.
474	(72-3HB-4)BR	PEORIA	175	159
		CONTRACT NO. 68886		
		ILLINOIS	FED. AID PROJECT	

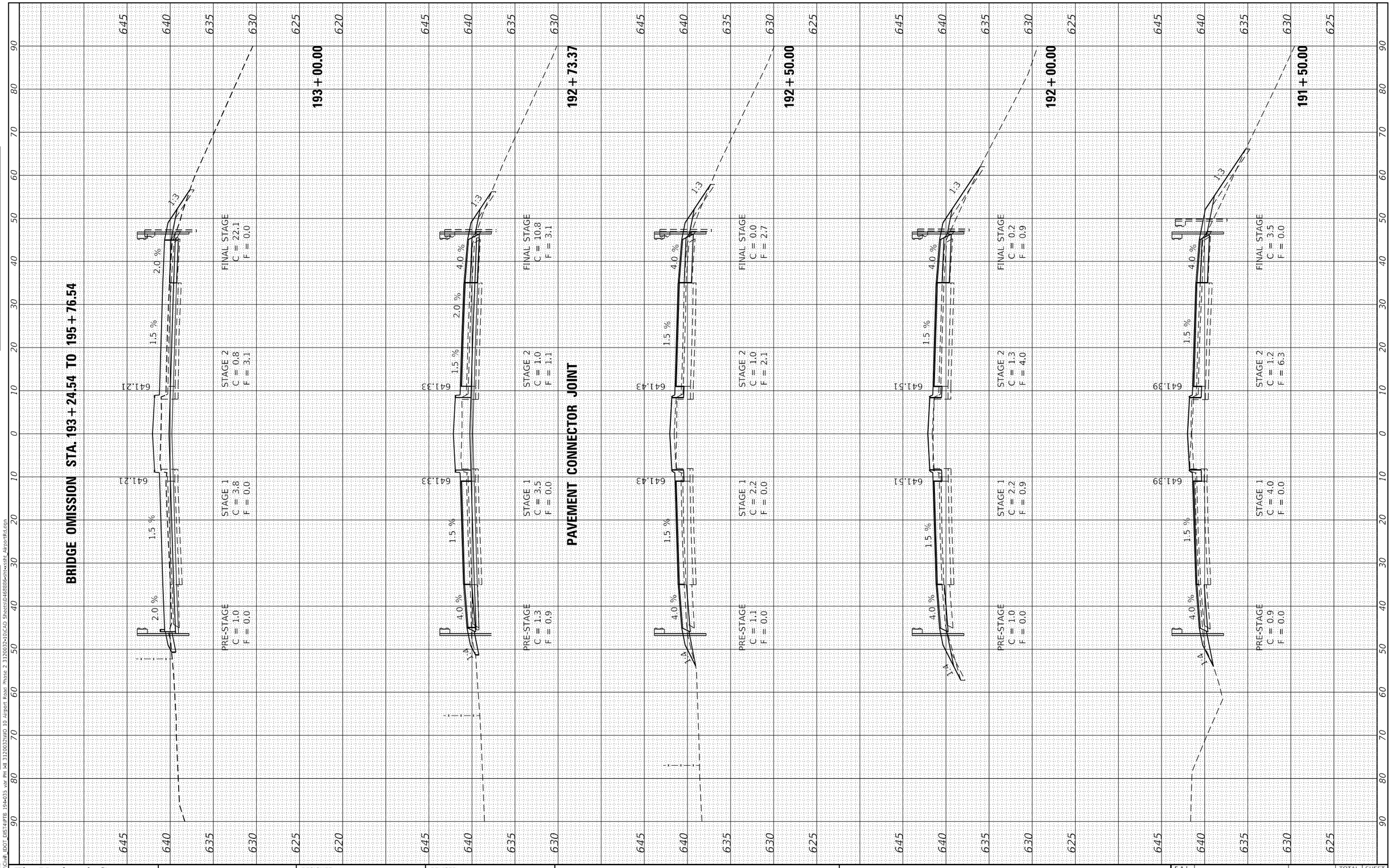

FINAL SURVEY		BY	DATE
NOTE BOOK	SURVEYED		
	PLOTTED		
	TEMPLATE		
	AREAS		
NO.	AREAS CHECKED		

ORIGINAL SURVEY		BY	DATE
NOTE BOOK	SURVEYED		
	PLOTTED		
	TEMPLATE		
	AREAS		
NO.	AREAS CHECKED		

PH III 3120032\WO 10 Airport Road Phase 2 3120032-10\CAD Sheets\D468886-sht-xsslt AirportRd.dgn

NODEL: Default
FILE NAME: P:\Civil\ IDOT_DIST4\PTB 194-035 var

The Upchurch Group
architects engineers surveyors
Professional Design Firm Corporation License No. 184-001401
123 North 15th Street Mattoon, IL 61938 Phone: 217.235.3177
e-mail: upchurchgroup@upchurchgroup.com

USER NAME = Sta42	DESIGNED -	REVISED -
TUG PROJECT NO. 3120032-10	DRAWN -	REVISED -
PLOT SCALE = 20.0000 ' / in.	CHECKED -	REVISED -
PLOT DATE = 6/19/2023	DATE -	REVISED -

STATE OF ILLINOIS
DEPARTMENT OF TRANSPORTATION

CROSS SECTIONS – AIRPORT ROAD
AIRPORT ROAD OVER I-474

SCALE: SHEET OF SHEETS STA. 191+50.00 TO STA. 193+00.00

F.A.I RTE.	SECTION	COUNTY	TOTAL SHEETS	SHEET NO.
474	(72-3HB-4)BR	PEORIA	175	160
		CONTRACT NO. 68886		
		ILLINOIS	FED. AID PROJECT	

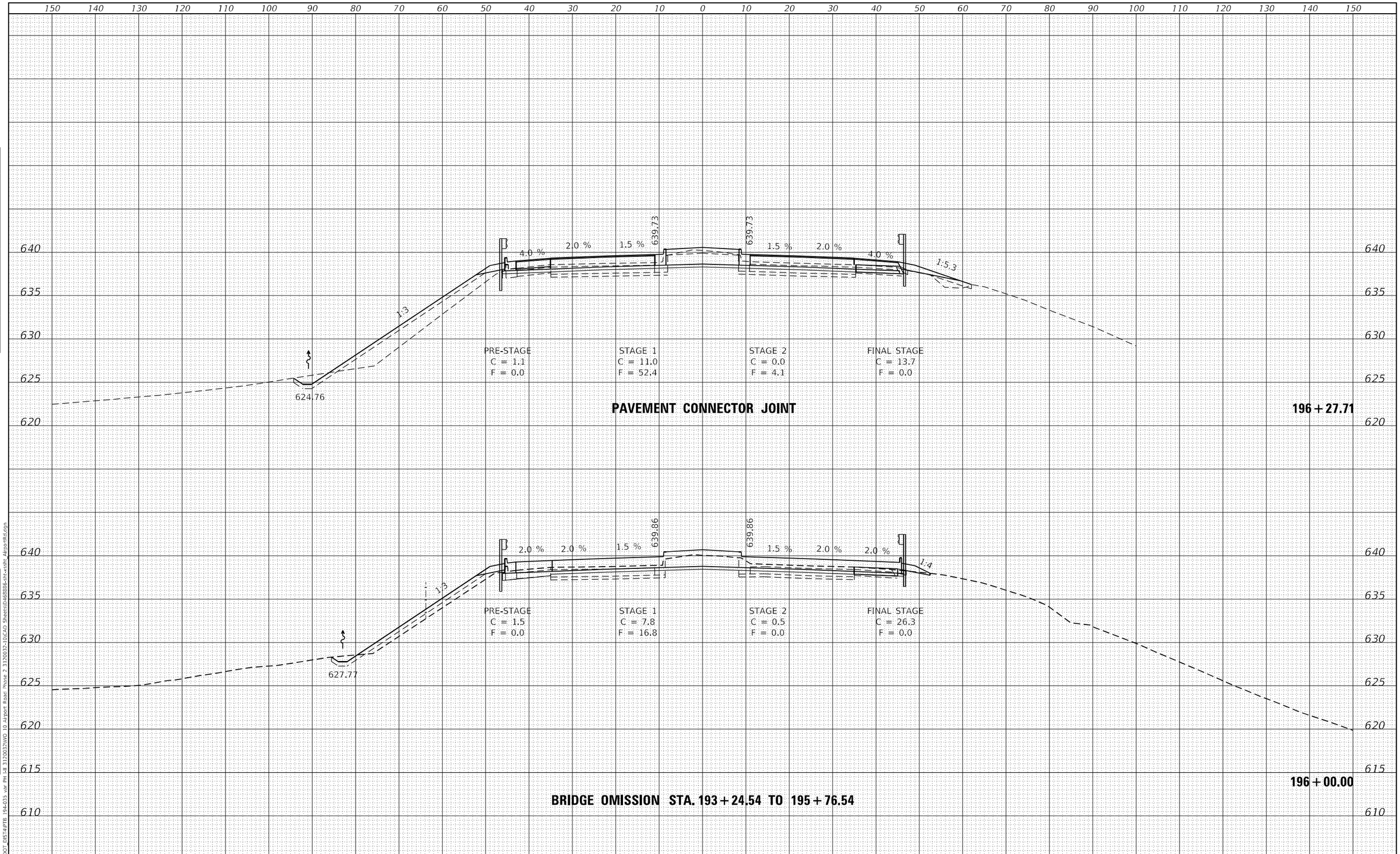

FINAL SURVEY	BY	DATE
SURVEYED		
PLOTTED		
TEMPLATE		
AREAS		
AREAS CHECKED		
NOTE BOOK		
NO.		

ORIGINAL SURVEY	BY	DATE
SURVEYED		
PLOTTED		
TEMPLATE		
AREAS		
AREAS CHECKED		
NOTE BOOK		
NO.		

MODEL: Default
FILE NAME: P:\Civil_IDOT_DIST4\PTB 194-035 v3\Ph I-II\3120032\WO 10-Airport Road\Phase 2 3120032-10\CAD Sheets\D468886-sht-xssht-AirportRd.dgn

The Upchurch Group
architects engineers surveyors
Professional Design Firm Corporation License No. 184-003401
123 North 15th Street Mattoon, IL 61938 Phone: 217.235.3177
e-mail: upchurchgroup@upchurchgroup.com

USER NAME = Sta42	DESIGNED -	REVISED -
TUG PROJECT NO. 3120032-10	DRAWN -	REVISED -
PLOT SCALE = 20.0000 ' / in.	CHECKED -	REVISED -
PLOT DATE = 6/19/2023	DATE -	REVISED -

STATE OF ILLINOIS
DEPARTMENT OF TRANSPORTATION

CROSS SECTIONS – AIRPORT ROAD
AIRPORT ROAD OVER I-474

SCALE: | SHEET OF SHEETS | STA. 196+00.00 TO STA. 196+27.71

F.A.I RTE.	SECTION	COUNTY	TOTAL SHEETS	SHEET NO.
474	(72-3HB-4)BR	PEORIA	175	161
		CONTRACT NO. 68886		
		ILLINOIS	FED. AID PROJECT	

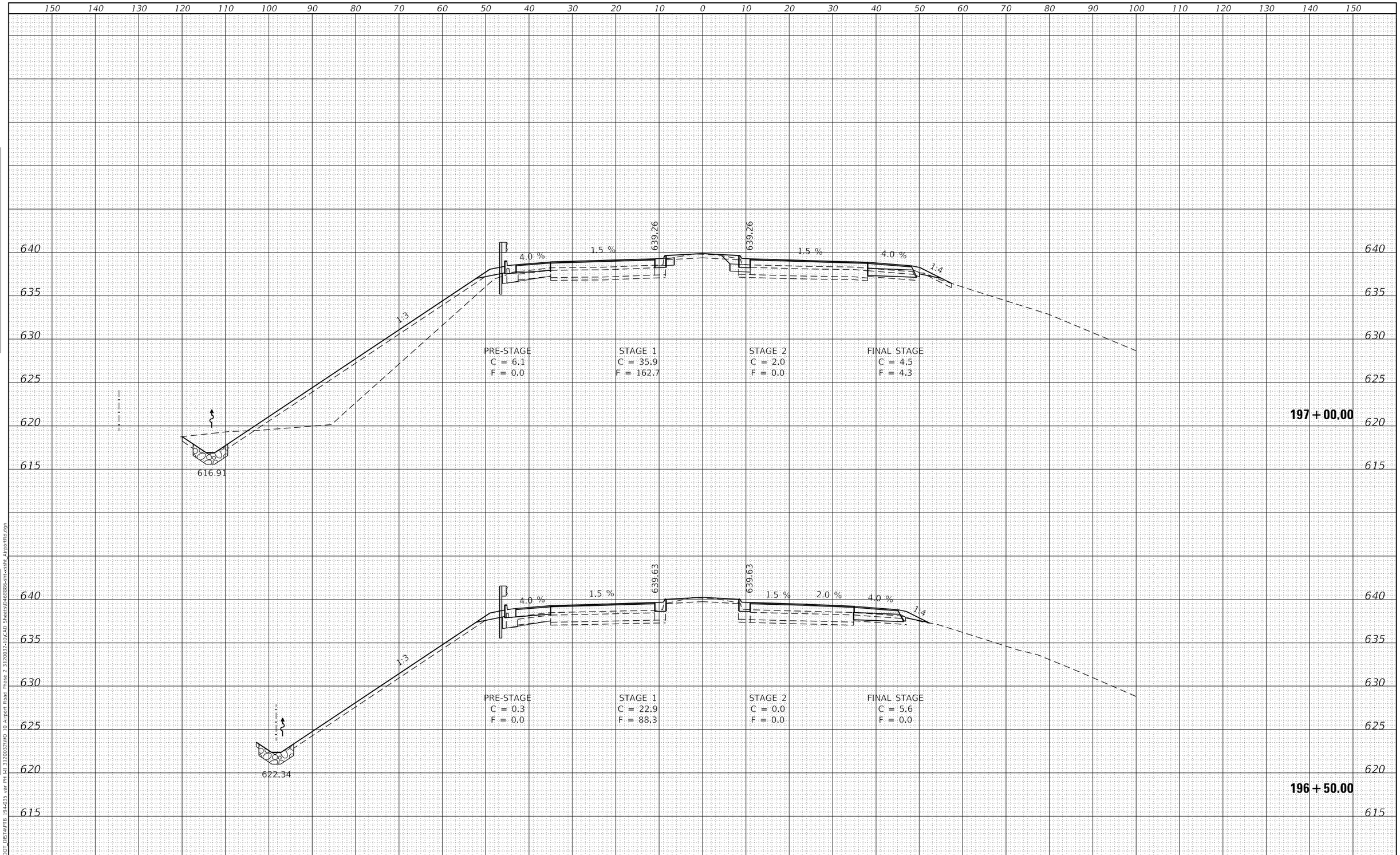

FINAL SURVEY	BY	DATE
SURVEYED		
PLOTTED		
TEMPLATE		
AREAS		
AREAS CHECKED		
NOTE BOOK		
NO.		

ORIGINAL SURVEY	BY	DATE
SURVEYED		
PLOTTED		
TEMPLATE		
AREAS		
AREAS CHECKED		
NOTE BOOK		
NO.		

MODEL: Default
FILE NAME: P:\Civil\ IDOT DIST4\PTB 194-035 var PH I-II 3120032\WO 10 Airport Road Phase 2 3120032-10\CAD Sheets\D68886-sht-xsect AirportRd.dgn

The Upchurch Group
architects engineers surveyors
Professional Design Firm Corporation
License No. 184-003401
123 North 15th Street
Mattoon, IL 61938
Phone: 217.235.3177
e-mail: upchurchgroup@upchurchgroup.com

USER NAME = Sta42	DESIGNED -	REVISED -
TUG PROJECT NO. 3120032-10	DRAWN -	REVISED -
PLOT SCALE = 20.0000 ' / in.	CHECKED -	REVISED -
PLOT DATE = 6/19/2023	DATE -	REVISED -

STATE OF ILLINOIS
DEPARTMENT OF TRANSPORTATION

CROSS SECTIONS – AIRPORT ROAD
AIRPORT ROAD OVER I–474

SCALE: SHEET OF SHEETS STA. 196+50.00 TO STA. 197+00.00

F.A.I RTE.	SECTION	COUNTY	TOTAL SHEETS	SHEET NO.
474	(72-3HB-4)BR	PEORIA	175	162

CONTRACT NO. 68886

ILLINOIS FED. AID PROJECT

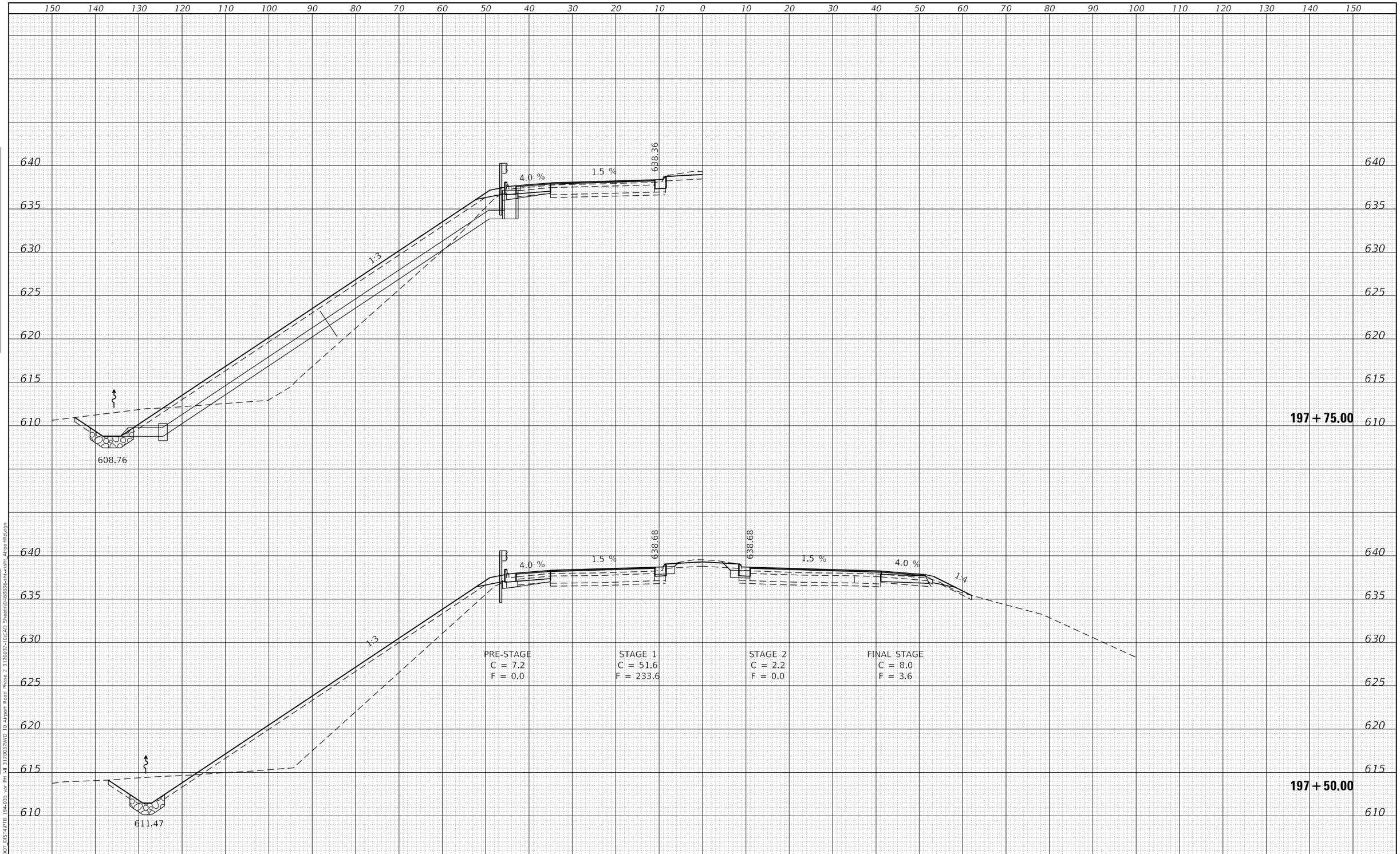

ORIGINAL SURVEY	BY	DATE
SURVEYED		
PLOTTED		
TEMPLATE		
AREAS		
AREAS CHECKED		
NOTE BOOK NO.		

FINAL SURVEY	BY	DATE
SURVEYED		
PLOTTED		
TEMPLATE		
AREAS		
AREAS CHECKED		
NOTE BOOK NO.		

MODEL: Default
FILE NAME: P:\Civil_IDOT_DIST4\PTB 194-035 v3\P PH I-II 3120032\WO 10 Airport Road Phase 2 3120032-10\CAD Sheets\D468886-sht-xsSht AirportRd.dgn

The Upchurch Group
architects engineers surveyors
Professional Design Firm Corporation
License No. 184-003401
123 North 15th Street
Mattoon, IL 61938
Phone: 217.235.3177
e-mail: upchurchgroup@upchurchgroup.com

USER NAME = Sta42	DESIGNED -	REVISED -
TUG PROJECT NO. 3120032-10	DRAWN -	REVISED -
PLOT SCALE = 20.0000 ' / in.	CHECKED -	REVISED -
PLOT DATE = 6/19/2023	DATE -	REVISED -

STATE OF ILLINOIS
DEPARTMENT OF TRANSPORTATION

CROSS SECTIONS – AIRPORT ROAD
AIRPORT ROAD OVER I-474

SCALE: | SHEET OF SHEETS | STA. 197+50.00 TO STA. 197+75.00

F.A.I RTE.	SECTION	COUNTY	TOTAL SHEETS	SHEET NO.
474	(72-3HB-4)BR	PEORIA	175	163
		CONTRACT NO. 68886		
		ILLINOIS	FED. AID PROJECT	

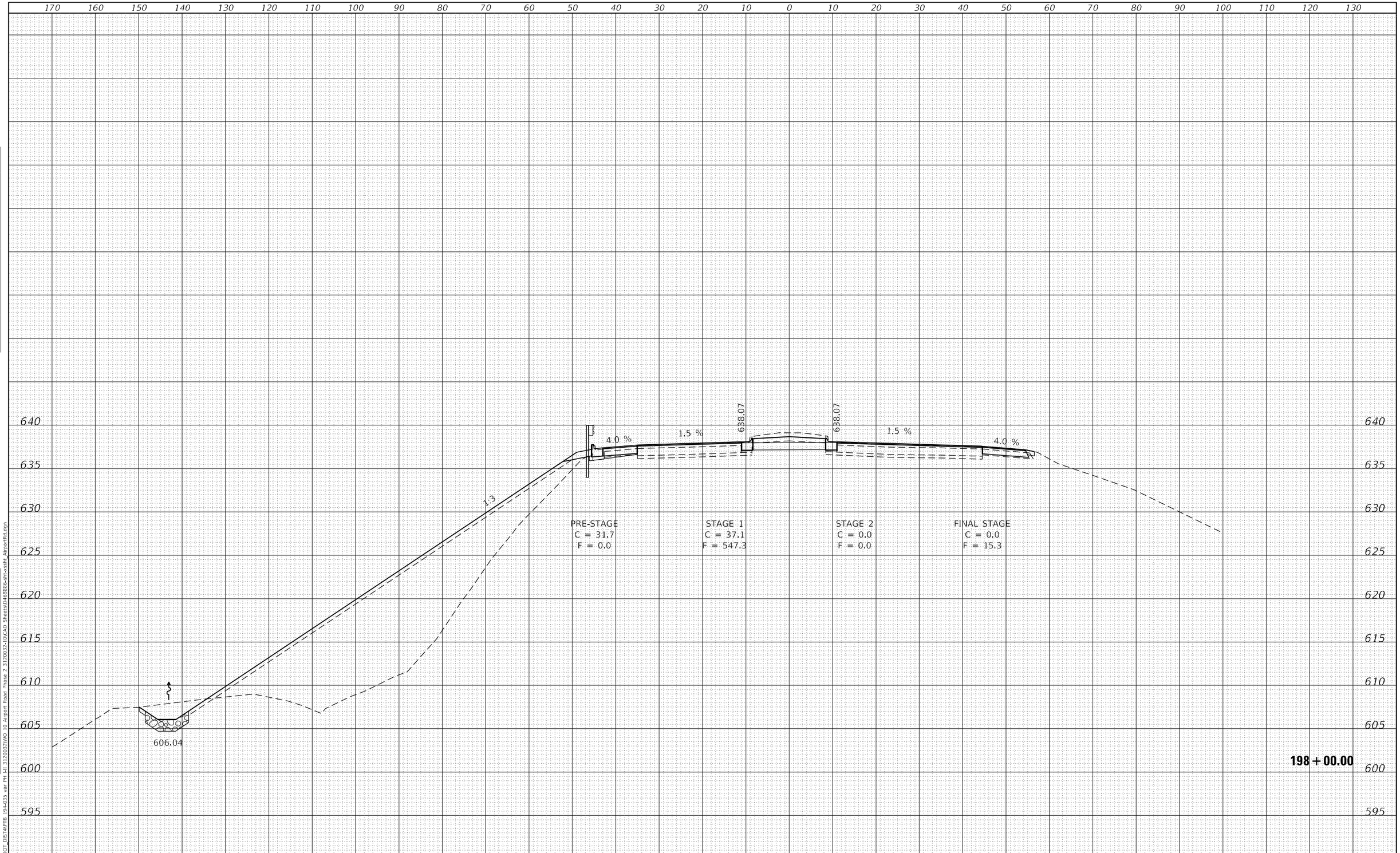

FINAL SURVEY	BY	DATE
SURVEYED		
PLOTTED		
TEMPLATE		
AREAS		
AREAS CHECKED		
NOTE BOOK NO.		

ORIGINAL SURVEY	BY	DATE
SURVEYED		
PLOTTED		
TEMPLATE		
AREAS		
AREAS CHECKED		
NOTE BOOK NO.		

MODEL: Default
FILE NAME: P:\Civil\IDOT_DIST4\PTB 194-035 var PH III 3120032\WO 10 Airport Road Phase 2 3120032-10\CAD Sheets\D468886-sht-xsdht Alpha-tRd.dgn

The Upchurch Group
architects engineers surveyors
Professional Design Firm Corporation License No. 184-003401
123 North 15th Street Mattoon, IL 61938 Phone: 217.235.3177
e-mail: upchurchgroup@upchurchgroup.com

USER NAME = Sta42	DESIGNED -	REVISED -
TUG PROJECT NO. 3120032-10	DRAWN -	REVISED -
PLOT SCALE = 20.0000 ' / in.	CHECKED -	REVISED -
PLOT DATE = 6/19/2023	DATE -	REVISED -

STATE OF ILLINOIS
DEPARTMENT OF TRANSPORTATION

CROSS SECTIONS – AIRPORT ROAD
AIRPORT ROAD OVER I-474

SCALE: SHEET OF SHEETS STA. 198+00.00 TO STA. 198+00.00

F.A.I RTE.	SECTION	COUNTY	TOTAL SHEETS	SHEET NO.
474	(72-3HB-4)BR	PEORIA	175	164
		CONTRACT NO. 68886		
		ILLINOIS	FED. AID PROJECT	

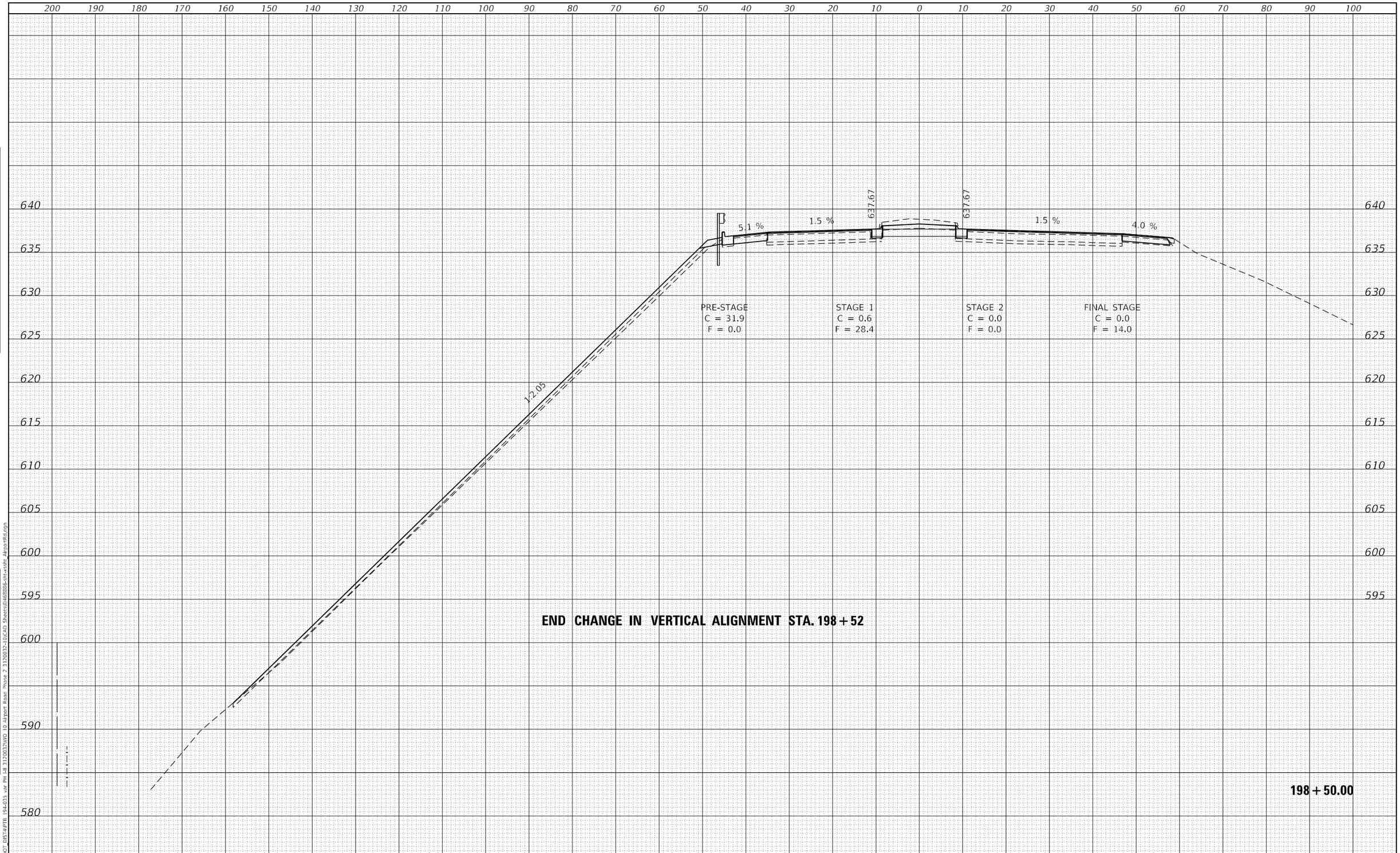

FINAL SURVEY	BY	DATE
SURVEYED		
PLOTTED		
TEMPLATE		
AREAS		
AREAS CHECKED		
NOTE BOOK		
NO.		

ORIGINAL SURVEY	BY	DATE
SURVEYED		
PLOTTED		
TEMPLATE		
AREAS		
AREAS CHECKED		
NOTE BOOK		
NO.		

MODEL: Default
FILE NAME: P:\Civil\ IDOT DIST4\PTB 194-035 var PH I-II 3120032\WO 10 Airport Road Phase 2 3120032-10\CAD Sheets\D468886-sht-xsht AirportRd.dgn

The Upchurch Group
architects engineers surveyors
Professional Design Firm Corporation
License No. 184-003401
123 North 15th Street
Mattoon, IL 61938
Phone: 217.235.3177
e-mail: upchurchgroup@upchurchgroup.com

USER NAME = Sta42	DESIGNED -	REVISED -
TUG PROJECT NO. 3120032-10	DRAWN -	REVISED -
PLOT SCALE = 20.0000 ' / in.	CHECKED -	REVISED -
PLOT DATE = 6/19/2023	DATE -	REVISED -

STATE OF ILLINOIS
DEPARTMENT OF TRANSPORTATION

CROSS SECTIONS – AIRPORT ROAD
AIRPORT ROAD OVER I-474

SCALE: | SHEET OF SHEETS | STA. 198+50.00 TO STA. 198+50.00

F.A.I RTE.	SECTION	COUNTY	TOTAL SHEETS	SHEET NO.
474	(72-3HB-4)BR	PEORIA	175	165

CONTRACT NO. 68886

ILLINOIS | FED. AID PROJECT

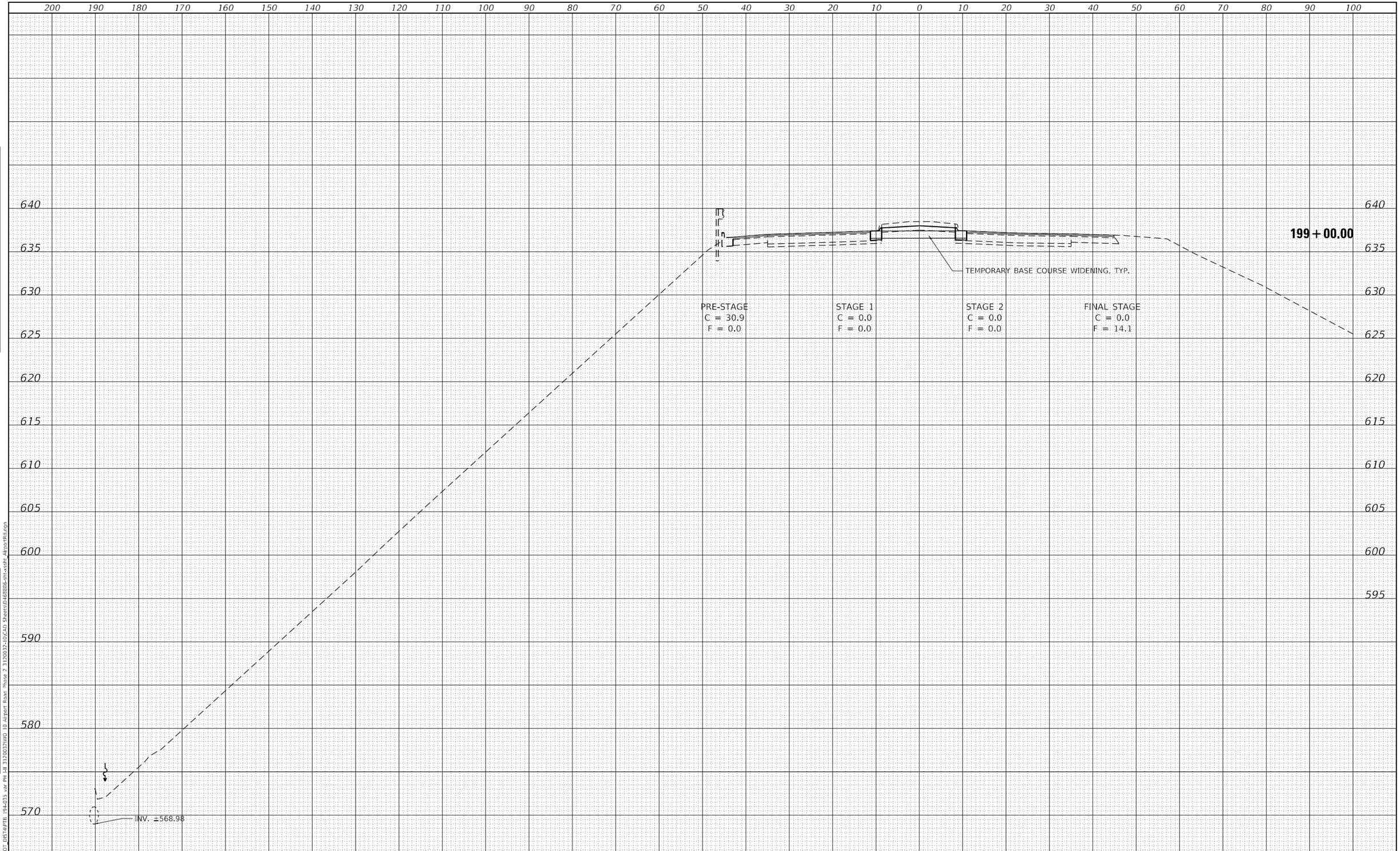

The Upchurch Group architects engineers surveyors Professional Design Firm Corporation License No. 184-003401 123 North 15th Street Mattoon, IL 61938 Phone: 217.235.3177 e-mail: upchurchgroup@upchurchgroup.com	USER NAME = Sta42 TUG PROJECT NO. 3120032-10 PLOT SCALE = 20.0000 ' / in. PLOT DATE = 6/19/2023	DESIGNED - DRAWN - CHECKED - DATE -	REVISED - REVISED - REVISED - REVISED -

STATE OF ILLINOIS
DEPARTMENT OF TRANSPORTATION

CROSS SECTIONS – AIRPORT ROAD
AIRPORT ROAD OVER I-474

SCALE: SHEET OF SHEETS STA. 199+00.00 TO STA. 199+00.00

F.A.I RTE.	SECTION	COUNTY	TOTAL SHEETS	SHEET NO.
474	(72-3HB-4)BR	PEORIA	175	166

CONTRACT NO. 68886

ILLINOIS | FED. AID PROJECT

FINAL SURVEY | NOTE BOOK NO. | SURVEYED | PLOTTED | TEMPLATE | AREAS | AREAS CHECKED | BY | DATE

ORIGINAL SURVEY | NOTE BOOK NO. | SURVEYED | PLOTTED | TEMPLATE | AREAS | AREAS CHECKED | BY | DATE

MODEL: Default
FILE NAME: P:\Civil\IDOT_DIST4\PTB 194-035 var PH III 3120032\WO 10 Airport Road Phase 2 3120032-10\CAD Sheets\D468886-sht-xsht AirportRd.dgn

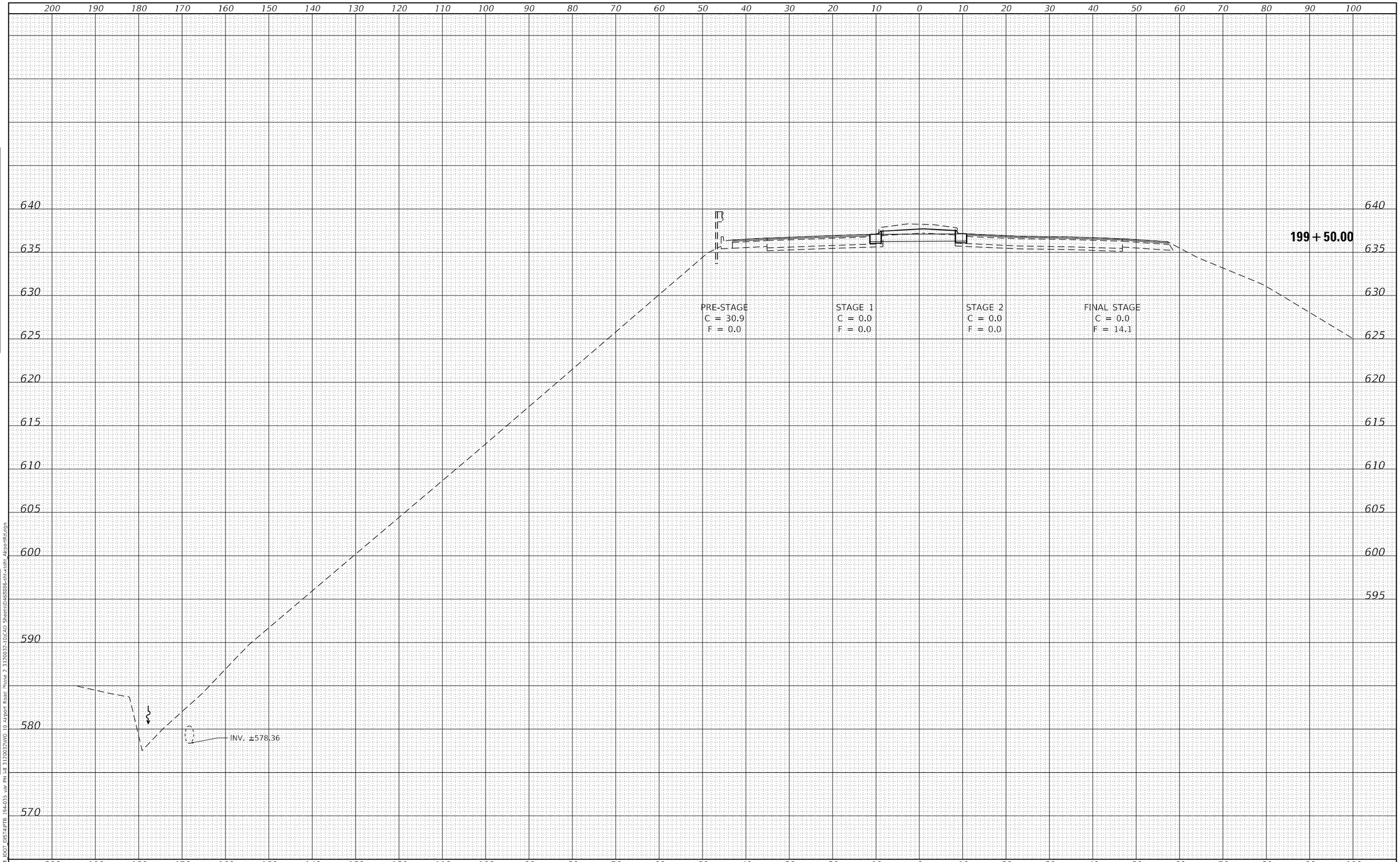

FINAL SURVEY	BY	DATE
SURVEYED		
PLOTTED		
TEMPLATE		
AREAS		
AREAS CHECKED		
NOTE BOOK		
NO.		

ORIGINAL SURVEY	BY	DATE
SURVEYED		
PLOTTED		
TEMPLATE		
AREAS		
AREAS CHECKED		
NOTE BOOK		
NO.		

MODEL: Default
FILE NAME: P:\Civil\ IDOT_DIST4\PTB 194-035 var PH I-II 3120032\WO 10 Airport Road Phase 2 3120032-10\CAD Sheets\D468886-sht-xsdht_AirportRd.dgn

The Upchurch Group
architects engineers surveyors
Professional Design Firm Corporation
License No. 184-003401
123 North 15th Street
Mattoon, IL 61938
Phone: 217.235.2777
e-mail: upchurchgroup@upchurchgroup.com

USER NAME = Sta42	DESIGNED -	REVISED -
TUG PROJECT NO. 3120032-10	DRAWN -	REVISED -
PLOT SCALE = 20.0000 ' / in.	CHECKED -	REVISED -
PLOT DATE = 6/19/2023	DATE -	REVISED -

STATE OF ILLINOIS
DEPARTMENT OF TRANSPORTATION

CROSS SECTIONS – AIRPORT ROAD
AIRPORT ROAD OVER I-474

SCALE: SHEET OF SHEETS STA. 199+50.00 TO STA. 199+50.00

F.A.U RTE.	SECTION	COUNTY	TOTAL SHEETS	SHEET NO.
474	(72-3HB-4)BR	PEORIA	175	167

CONTRACT NO. 68886

ILLINOIS FED. AID PROJECT

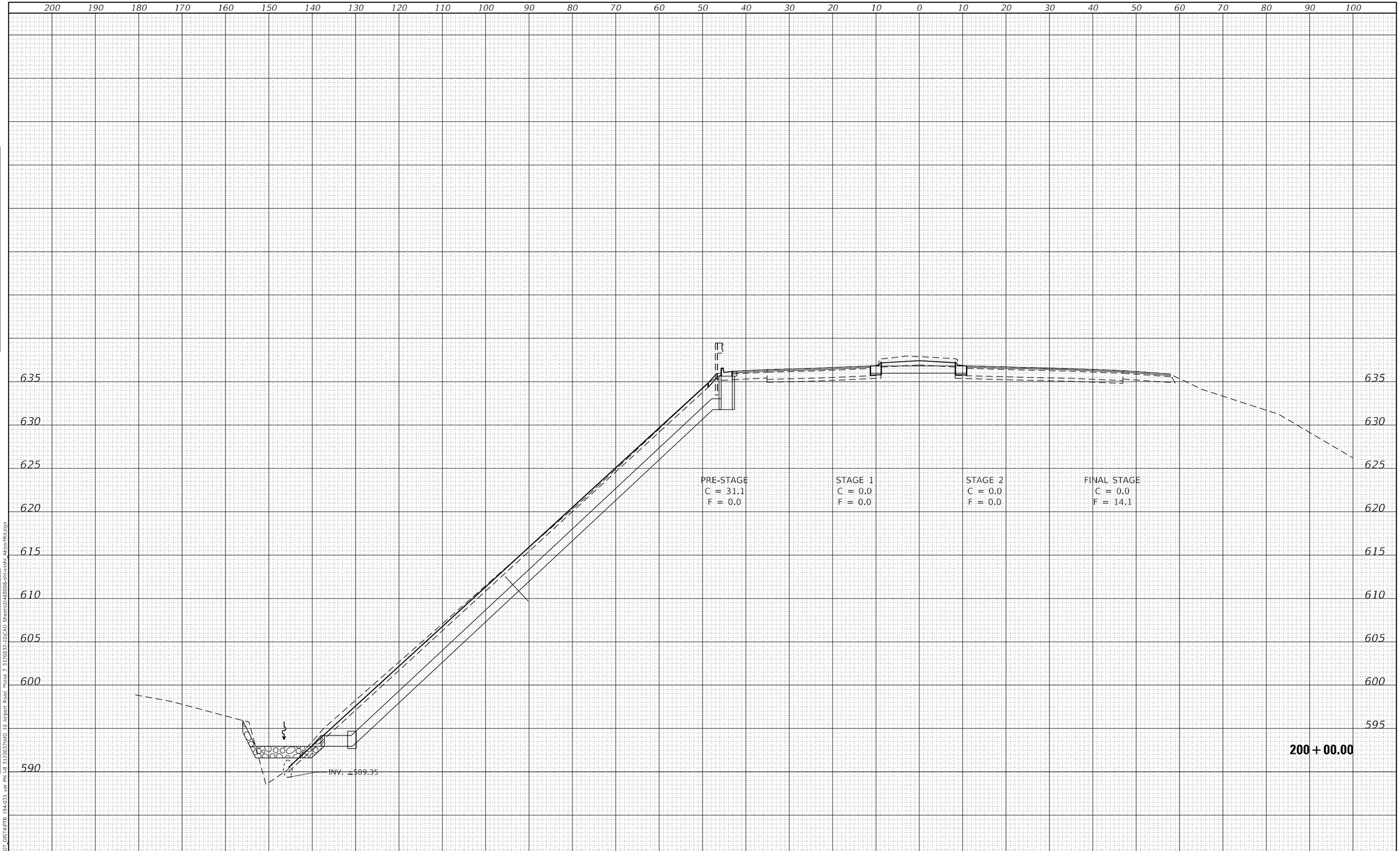

FINAL SURVEY		BY	DATE
NOTE BOOK	SURVEYED		
	PLOTTED		
	TEMPLATE		
	AREAS		
NO.	AREAS CHECKED		

ORIGINAL SURVEY		BY	DATE
NOTE BOOK	SURVEYED		
	PLOTTED		
	TEMPLATE		
	AREAS		
NO.	AREAS CHECKED		

MODEL: Default
FILE NAME: P:\Civil_IDOT_DIST4\PTB 194-035 var PH III 3120032\IWO 10 Airport Road Phase 2 3120032-10\CAD Sheets\D468886-sht-xsht Alrpo rtRd.dgn

The Upchurch Group
architects engineers surveyors
Professional Design Firm Corporation License No. 184-003401
123 North 15th Street Mattoon, IL 61938 Phone: 217.235.3177
e-mail: upchurchgroup@upchurchgroup.com

USER NAME = Sta42	DESIGNED -	REVISED -
TUG PROJECT NO. 3120032-10	DRAWN -	REVISED -
PLOT SCALE = 20.0000 ' / in.	CHECKED -	REVISED -
PLOT DATE = 6/19/2023	DATE -	REVISED -

STATE OF ILLINOIS
DEPARTMENT OF TRANSPORTATION

CROSS SECTIONS – AIRPORT ROAD
AIRPORT ROAD OVER I-474

SCALE: | SHEET OF SHEETS | STA. 200+00.00 TO STA. 200+00.00

F.A.I RTE.	SECTION	COUNTY	TOTAL SHEETS	SHEET NO.
474	(72-3HB-4)BR	PEORIA	175	168
		CONTRACT NO. 68886		
		ILLINOIS	FED. AID PROJECT	

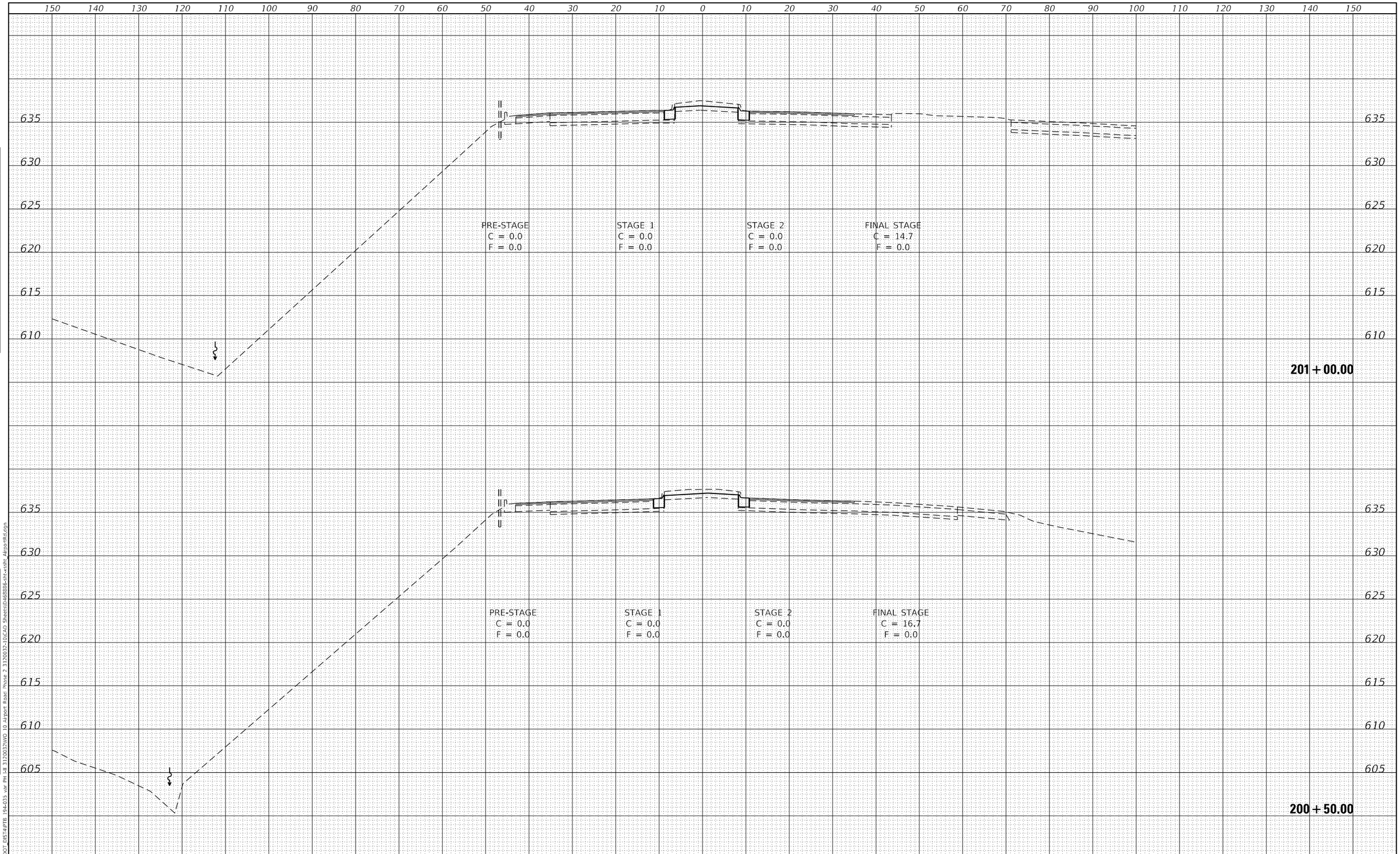

FINAL SURVEY		BY	DATE
NOTE BOOK	SURVEYED		
	PLOTTED		
	TEMPLATE		
	AREAS		
NO.	AREAS CHECKED		

ORIGINAL SURVEY		BY	DATE
NOTE BOOK	SURVEYED		
	PLOTTED		
	TEMPLATE		
	AREAS		
NO.	AREAS CHECKED		

MODEL: Default
FILE NAME: P:\Civil_IDOT_DIST4\PTB 194-035 v3\Ph I-II\3120032\WO 10 Airport Road Phase 2 3120032-10\CAD Sheets\D468886-sht-xssht AirportRd.dgn

The Upchurch Group
architects engineers surveyors
Professional Design Firm Corporation License No. 184-003401
123 North 15th Street Mattoon, IL 61938 Phone: 217.235.3177
e-mail: upchurchgroup@upchurchgroup.com

USER NAME = Sta42	DESIGNED -	REVISED -
TUG PROJECT NO. 3120032-10	DRAWN -	REVISED -
PLOT SCALE = 20.0000 ' / in.	CHECKED -	REVISED -
PLOT DATE = 6/19/2023	DATE -	REVISED -

STATE OF ILLINOIS
DEPARTMENT OF TRANSPORTATION

CROSS SECTIONS – AIRPORT ROAD
AIRPORT ROAD OVER I-474

SCALE: | SHEET OF SHEETS | STA. 200+50.00 TO STA. 201+00.00

F.A.I RTE.	SECTION	COUNTY	TOTAL SHEETS	SHEET NO.
474	(72-3HB-4)BR	PEORIA	175	169
		CONTRACT NO. 68886		
		ILLINOIS	FED. AID PROJECT	

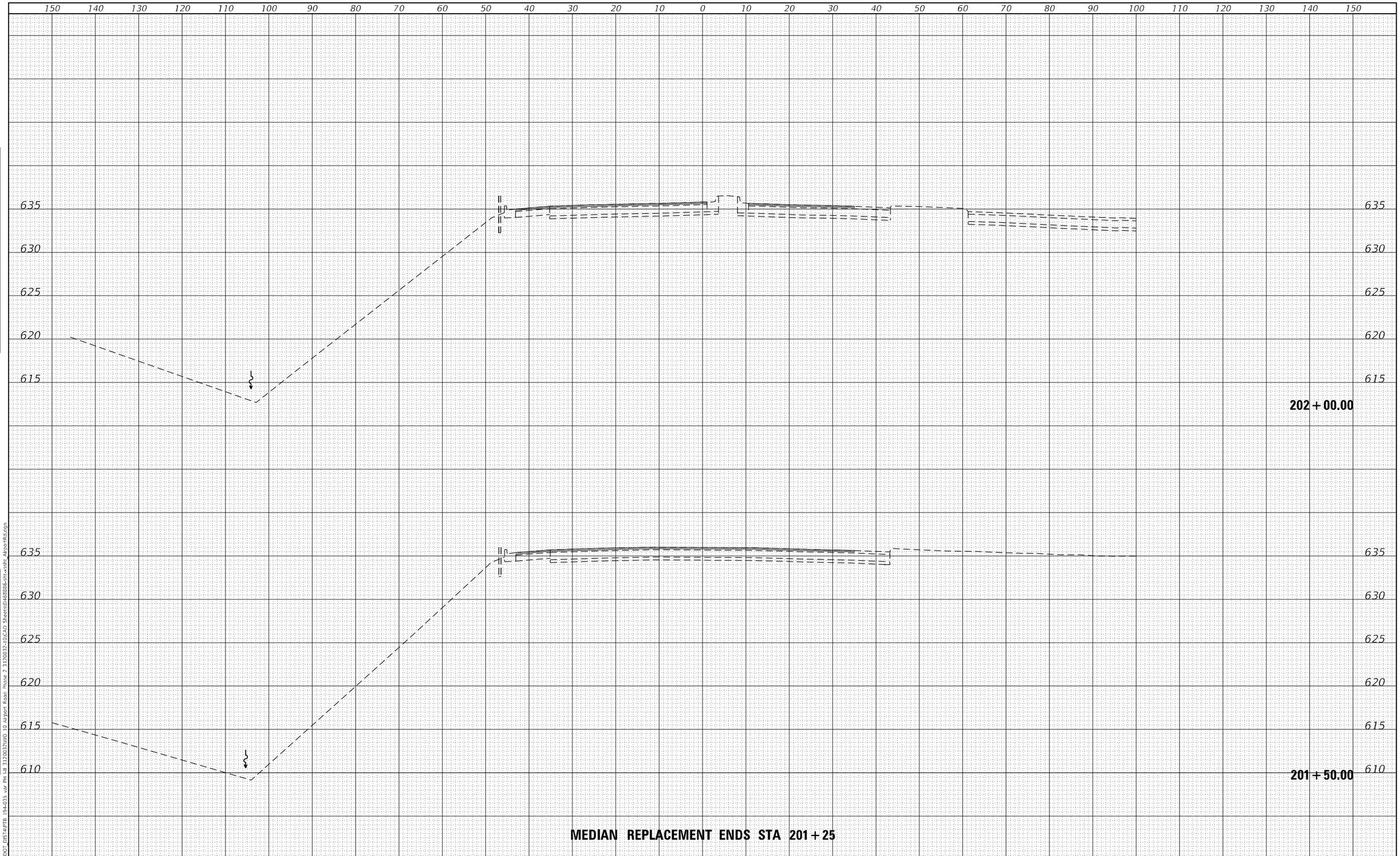

FINAL SURVEY		BY	DATE
NOTE BOOK	SURVEYED		
	PLOTTED		
	TEMPLATE		
	AREAS		
NO.	AREAS CHECKED		

ORIGINAL SURVEY		BY	DATE
NOTE BOOK	SURVEYED		
	PLOTTED		
	TEMPLATE		
	AREAS		
NO.	AREAS CHECKED		

MODEL: Default
FILE NAME: P:\Civil_IDOT_DIST4\PTB 194-035 v3\Ph I-II\3120032\WO 10-Airport Road\Phase 2-3120032-10\CAD Sheets\D468886-sht-xsSht-AirportRd.dgn

The Upchurch Group
architects engineers surveyors
Professional Design Firm Corporation License No. 184-003401
123 North 15th Street Mattoon, IL 61938 Phone: 217.235.3177 e-mail: upchurchgroup@upchurchgroup.com

USER NAME = Sta42	DESIGNED -	REVISED -
TUG PROJECT NO. 3120032-10	DRAWN -	REVISED -
PLOT SCALE = 20.0000 ' / in.	CHECKED -	REVISED -
PLOT DATE = 6/19/2023	DATE -	REVISED -

STATE OF ILLINOIS
DEPARTMENT OF TRANSPORTATION

CROSS SECTIONS – AIRPORT ROAD
AIRPORT ROAD OVER I-474

SCALE: | SHEET OF SHEETS | STA. 201+50.00 TO STA. 202+00.00

F.A.I RTE.	SECTION	COUNTY	TOTAL SHEETS	SHEET NO.
474	(72-3HB-4)BR	PEORIA	175	170
		CONTRACT NO. 68886		
		ILLINOIS	FED. AID PROJECT	

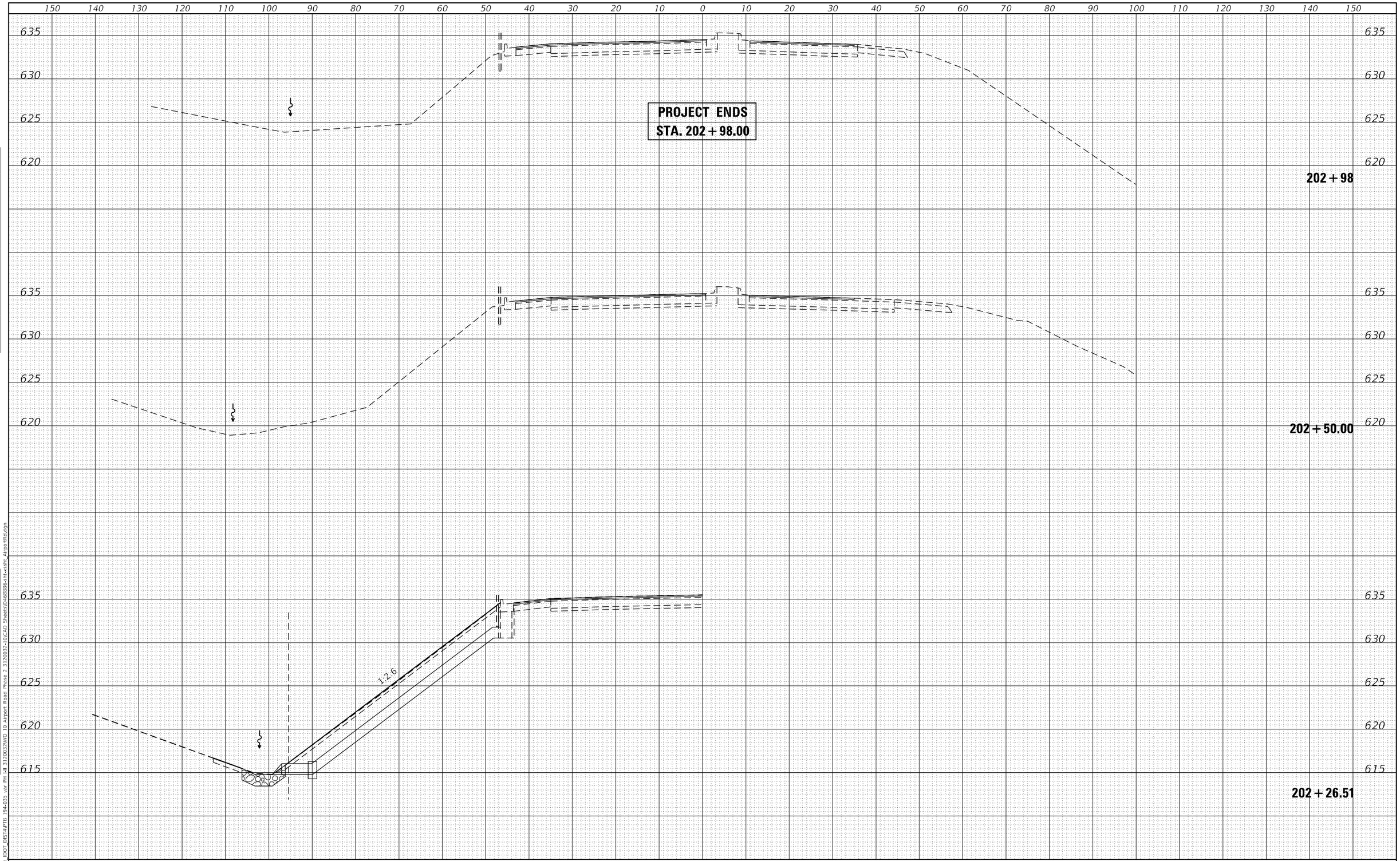

FINAL SURVEY		BY	DATE
NOTE BOOK	SURVEYED		
	PLOTTED		
	TEMPLATE		
	AREAS		
NO.	AREAS CHECKED		

ORIGINAL SURVEY		BY	DATE
NOTE BOOK	SURVEYED		
	PLOTTED		
	TEMPLATE		
	AREAS		
NO.	AREAS CHECKED		

MODEL: Default
FILE NAME: P:\Civil_IDOT_DIST4\PTB 194-035 v3\P PH I-III 3120032\WO 10 Airport Road Phase 2 3120032-10\CAD Sheets\D468886-sht-xssht AirportRd.dgn

The Upchurch Group
architects engineers surveyors
Professional Design Firm Corporation License No. 184-003401
123 North 15th Street Mattoon, IL 61938 Phone: 217.235.3177
e-mail: upchurchgroup@upchurchgroup.com

USER NAME = Sta42	DESIGNED -	REVISED -
TUG PROJECT NO. 3120032-10	DRAWN -	REVISED -
PLOT SCALE = 20.0000 ' / in.	CHECKED -	REVISED -
PLOT DATE = 6/19/2023	DATE -	REVISED -

STATE OF ILLINOIS
DEPARTMENT OF TRANSPORTATION

CROSS SECTIONS – AIRPORT ROAD
AIRPORT ROAD OVER I-474

SCALE: | SHEET OF SHEETS | STA. 202+26.51 TO STA. 203+00.00

F.A.I RTE.	SECTION	COUNTY	TOTAL SHEETS	SHEET NO.
474	(72-3HB-4)BR	PEORIA	175	171
		CONTRACT NO. 68886		
		ILLINOIS	FED. AID PROJECT	

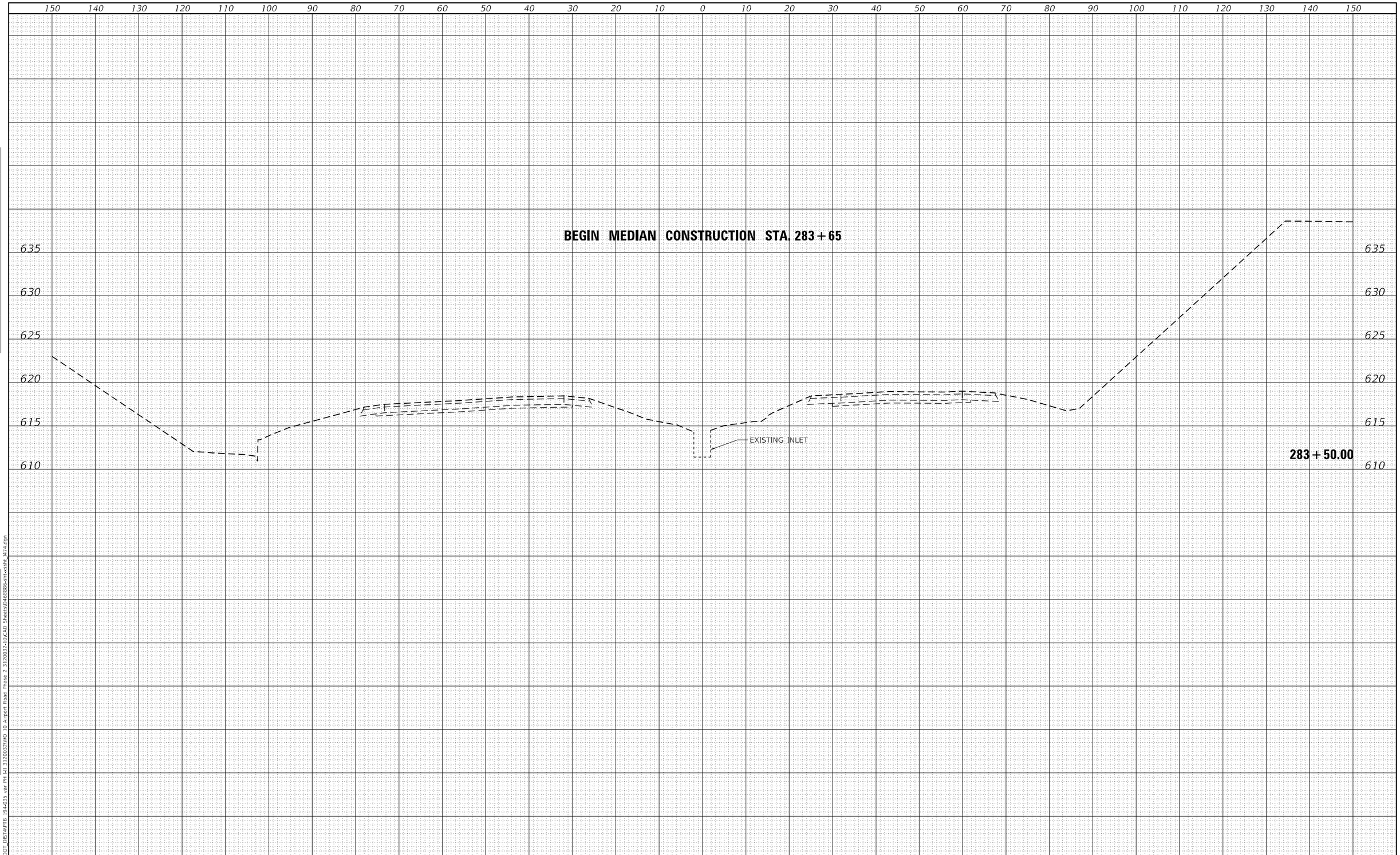

FINAL SURVEY		BY	DATE
NOTE BOOK	SURVEYED		
	PLOTTED		
	TEMPLATE		
	AREAS		
	AREAS CHECKED		
NO.			

ORIGINAL SURVEY		BY	DATE
NOTE BOOK	SURVEYED		
	PLOTTED		
	TEMPLATE		
	AREAS		
	AREAS CHECKED		
NO.			

MODEL: Default
FILE NAME: P:\Civil\ IDOT DIST4\PTB 194-035 var PH I-II 3120032\WO 10 Airport Road Phase 2 3120032-10\CAD Sheets\D68886-sht-xsht 1474.dgn

The Upchurch Group
architects engineers surveyors
Professional Design Firm Corporation
License No. 184-003401
123 North 15th Street
Mattoon, IL 61938
Phone: 217.235.3177
e-mail: upchurchgroup@upchurchgroup.com

USER NAME = Sta42	DESIGNED -	REVISED -
TUG PROJECT NO. 3120032-10	DRAWN -	REVISED -
PLOT SCALE = 20.0000 ' / in.	CHECKED -	REVISED -
PLOT DATE = 6/19/2023	DATE -	REVISED -

STATE OF ILLINOIS
DEPARTMENT OF TRANSPORTATION

CROSS SECTIONS – I-474
AIRPORT ROAD OVER I-474

SCALE: SHEET OF SHEETS STA. 283+00.00 TO STA. 283+50.00

F.A.I RTE.	SECTION	COUNTY	TOTAL SHEETS	SHEET NO.
474	(72-3HB-4)BR	PEORIA	175	172
		CONTRACT NO. 68886		
	ILLINOIS	FED. AID PROJECT		

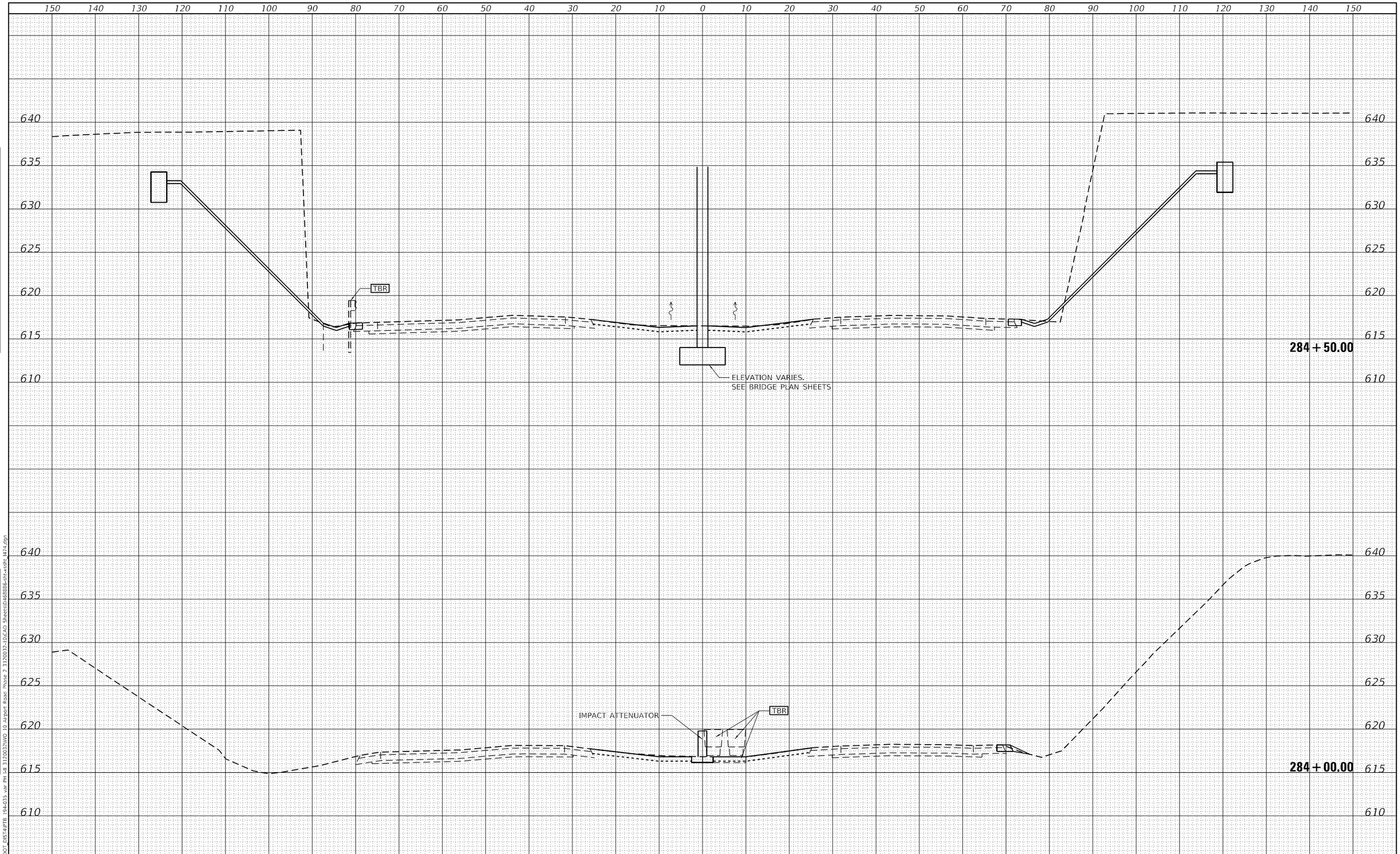

FINAL SURVEY		BY	DATE
	SURVEYED		
	PLOTTED		
	TEMPLATE		
NOTE BOOK	AREAS		
	AREAS CHECKED		
NO.			

ORIGINAL SURVEY		BY	DATE
	SURVEYED		
	PLOTTED		
	TEMPLATE		
NOTE BOOK	AREAS		
	AREAS CHECKED		
NO.			

MODEL: Default
FILE NAME: P:\Civil_IDOT_DIST4\PTB 194-035 v3\PH I-III 3120032\WO 10 Airport Road Phase 2 3120032-10\CAD Sheets\D468886-sht-xssht I474.dgn

The Upchurch Group
architects engineers surveyors
Professional Design Firm Corporation License No. 184-003401
123 North 15th Street Mattoon, IL 61938 Phone: 217.235.3177
e-mail: upchurchgroup@upchurchgroup.com

USER NAME = Sta42	DESIGNED -	REVISED -
TUG PROJECT NO. 3120032-10	DRAWN -	REVISED -
PLOT SCALE = 20.0000 ' / in.	CHECKED -	REVISED -
PLOT DATE = 6/19/2023	DATE -	REVISED -

STATE OF ILLINOIS
DEPARTMENT OF TRANSPORTATION

CROSS SECTIONS – I-474
AIRPORT ROAD OVER I-474

SCALE: SHEET OF SHEETS STA. 284+00.00 TO STA. 284+50.00

F.A.I RTE.	SECTION	COUNTY	TOTAL SHEETS	SHEET NO.
474	(72-3HB-4)BR	PEORIA	175	173
		CONTRACT NO. 68886		
		ILLINOIS	FED. AID PROJECT	

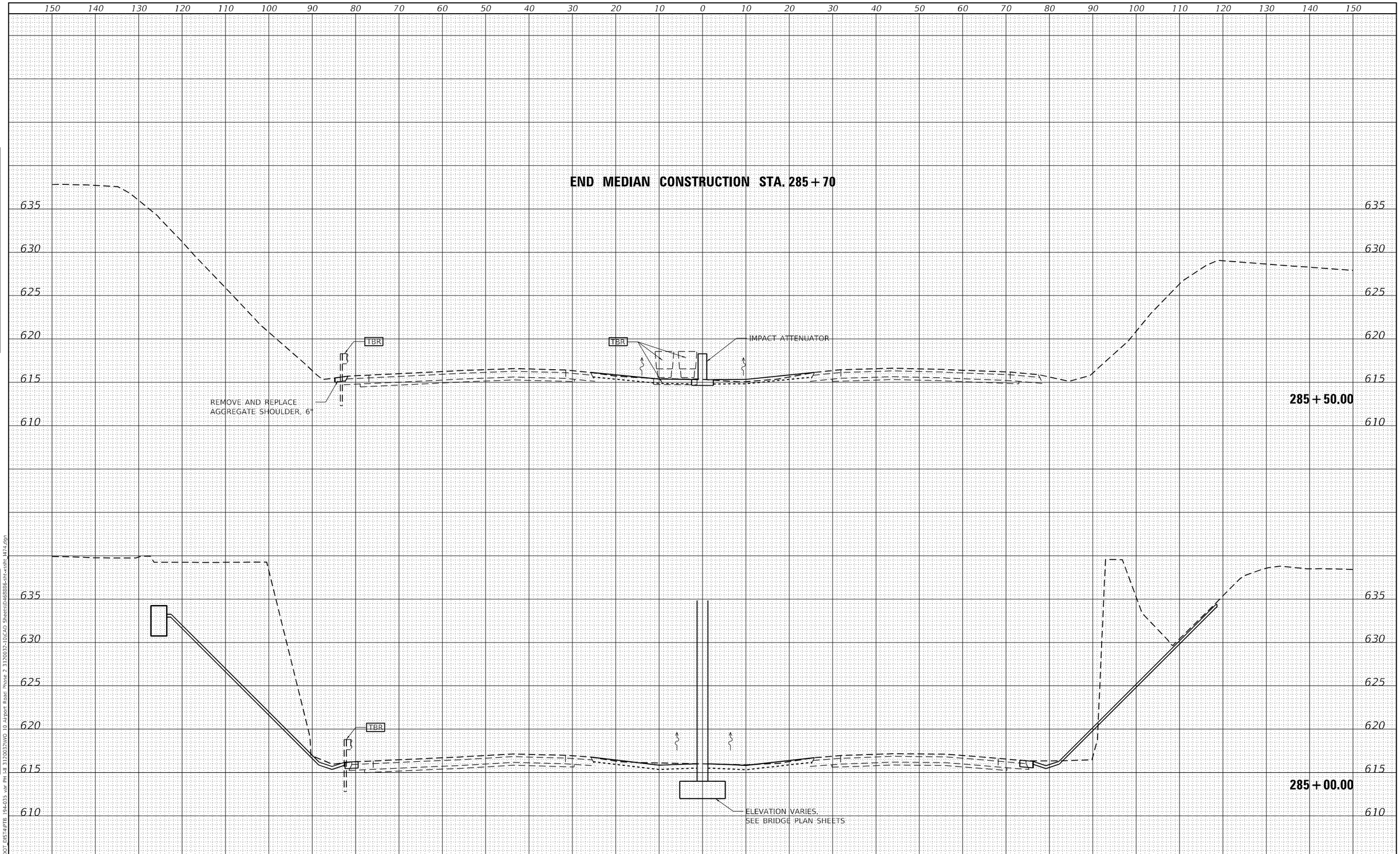

FINAL SURVEY	BY	DATE
SURVEYED		
PLOTTED		
TEMPLATE		
AREAS		
AREAS CHECKED		
NOTE BOOK NO.		

ORIGINAL SURVEY	BY	DATE
SURVEYED		
PLOTTED		
TEMPLATE		
AREAS		
AREAS CHECKED		
NOTE BOOK NO.		

MODEL: Default
FILE NAME: P:\Civil_IDOT_DIST4\PTB 194-035 v3\PH I-III 3120032\WO 10 Airport Road Phase 2 3120032-10\CAD Sheets\D468886-sht-xssht I474.dgn

The Upchurch Group
architects engineers surveyors
Professional Design Firm Corporation License No. 184-003401
123 North 15th Street Mattoon, IL 61938 Phone: 217.235.3177
e-mail: upchurchgroup@upchurchgroup.com

USER NAME = Sta42	DESIGNED -	REVISED -
TUG PROJECT NO. 3120032-10	DRAWN -	REVISED -
PLOT SCALE = 20.0000 ' / in.	CHECKED -	REVISED -
PLOT DATE = 6/19/2023	DATE -	REVISED -

STATE OF ILLINOIS
DEPARTMENT OF TRANSPORTATION

CROSS SECTIONS – I-474
AIRPORT ROAD OVER I-474

SCALE: SHEET OF SHEETS STA. 285+00.00 TO STA. 285+50.00

F.A.I RTE.	SECTION	COUNTY	TOTAL SHEETS	SHEET NO.
474	(72-3HB-4)BR	PEORIA	175	174
		CONTRACT NO. 68886		
		ILLINOIS	FED. AID PROJECT	

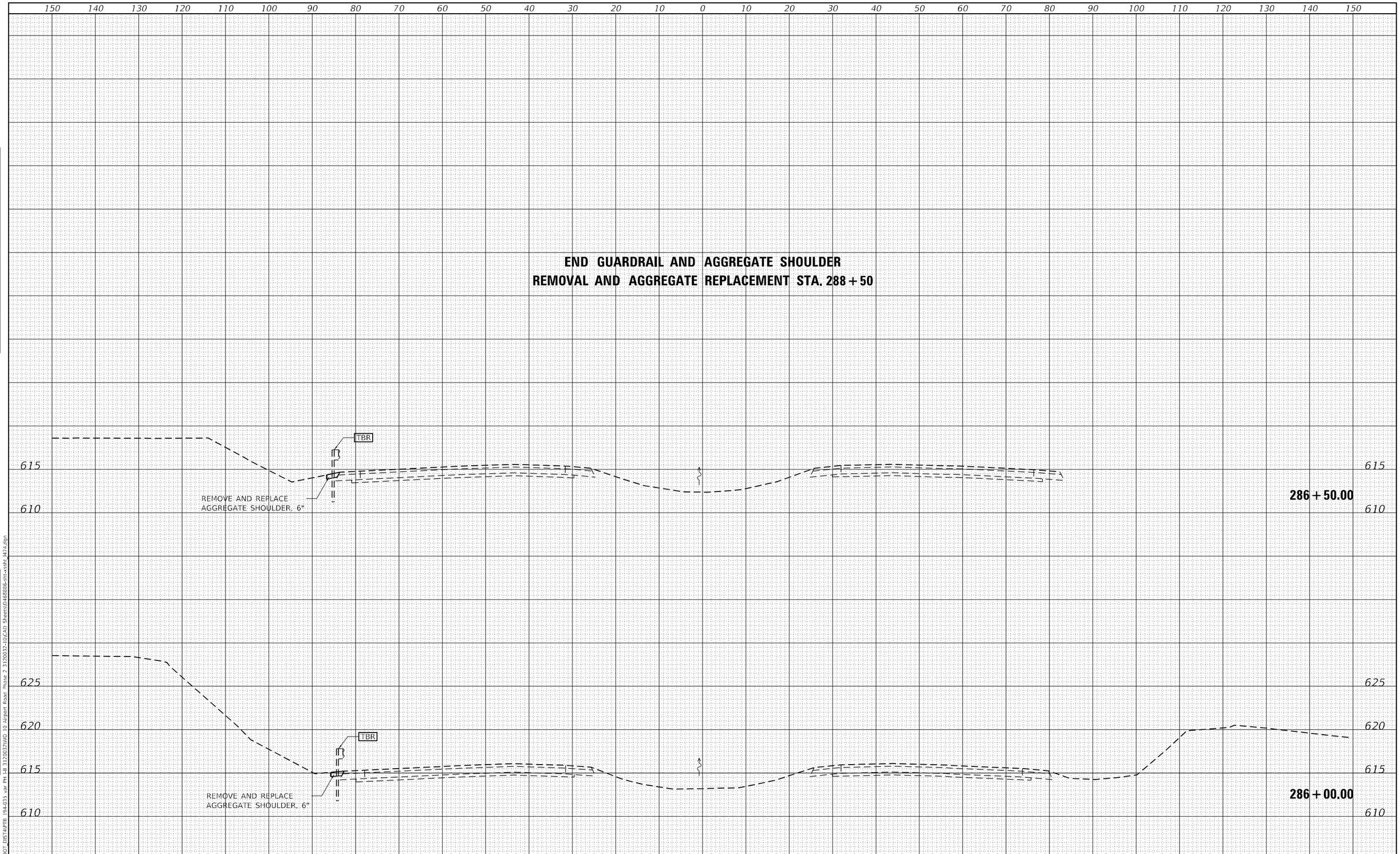

FINAL SURVEY		BY	DATE
	SURVEYED		
	PLOTTED		
	TEMPLATE		
NOTE BOOK	AREAS		
	AREAS		
NO.	AREAS CHECKED		

ORIGINAL SURVEY		BY	DATE
	SURVEYED		
	PLOTTED		
	TEMPLATE		
NOTE BOOK	AREAS		
	AREAS		
NO.	AREAS CHECKED		

MODEL: Default
FILE NAME: P:\Civil\IDOT_DIST4\PTB 194-035 var PH III 3120032\WO 10 Airport Road Phase 2 3120032-10\CAD Sheets\D468886-int-xsht I474.dgn

The Upchurch Group
architects engineers surveyors
Professional Design Firm Corporation
License No. 184-003401
123 North 15th Street
Mattoon, IL 61938
Phone: 217.235.3177
e-mail: upchurchgroup@upchurchgroup.com

USER NAME = Sta42	DESIGNED -	REVISED -
TUG PROJECT NO. 3120032-10	DRAWN -	REVISED -
PLOT SCALE = 20.0000 ' / in.	CHECKED -	REVISED -
PLOT DATE = 6/19/2023	DATE -	REVISED -

STATE OF ILLINOIS
DEPARTMENT OF TRANSPORTATION

CROSS SECTIONS – I-474
AIRPORT ROAD OVER I-474

SCALE: | SHEET OF SHEETS | STA. 286+00.00 TO STA. 286+50.00

F.A.I RTE.	SECTION	COUNTY	TOTAL SHEETS	SHEET NO.
474	(72-3HB-4)BR	PEORIA	175	175
		CONTRACT NO. 68886		
		ILLINOIS	FED. AID PROJECT	