F.A.U. RTE.	SECTION	COUNTY	TOTAL SHEETS	SHEET NO.
8075	03-00167-04-FP	SANGAMON	109	7
STA.		TO STA.		
FED. ROAD DIST. NO.	ILLINOIS	FED. AID PROJECT		

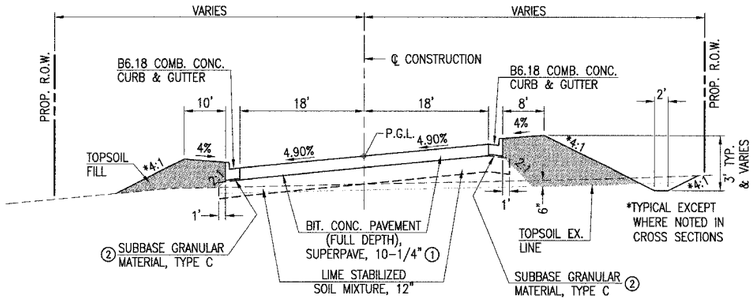

PROPOSED TYPICAL SECTION

CARDINAL HILL RD. (C.H. 37)
STA 517+37.86 – STA 525+57.88
S.E.A. STA 517+37.86 – STA 518+07.86
S.E.A. STA 524+89.93 – STA 526+99.93
SEE INTERSECTION DETAIL, SHEET 36: STA 525+89.93 – STA 528+75.45

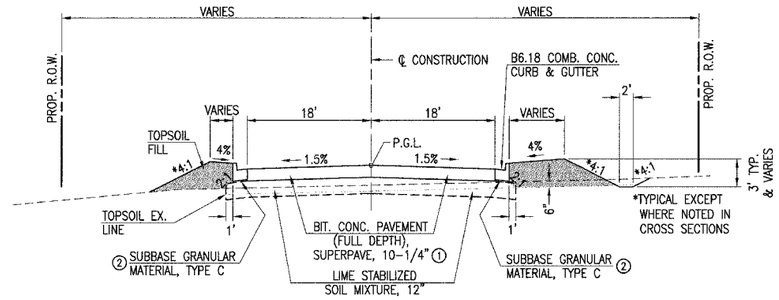

PROPOSED TYPICAL SECTION

CARDINAL HILL RD. (C.H. 37)
STA 528+57.88 – STA 528+75.45
SEE INTERSECTION DETAIL, SHEET 36: STA 525+89.93 – STA 528+75.45

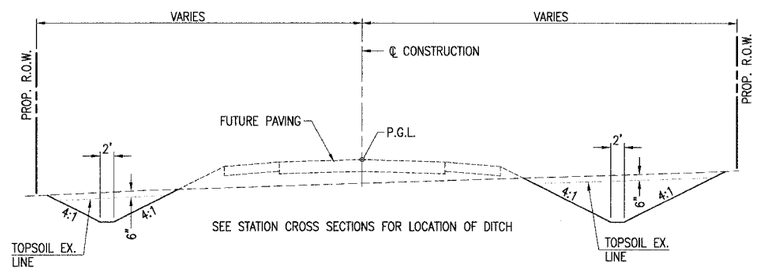

PROPOSED TYPICAL SECTION

CARDINAL HILL RD. (C.H. 37)
STA 528+75.45 – STA 538+75.70

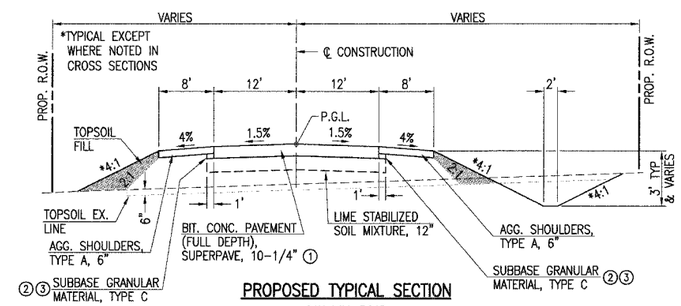

PROPOSED TYPICAL SECTION

OAK HILL ROAD
STA 182+00.00 – STA 184+02.49
STA 186+06.56 – STA 194+33.00
EOP & SHLD TAPER: STA 182+00.00 – STA 183+00.00
SEE INTERSECTION DETAIL, SHEET 37: STA 184+02.49 – STA 186+06.56

① 6-1/2" LOWER BINDER – 2 LIFTS
2-1/4" TOP LIFT BINDER (POLYMERIZED)
1-1/2" SURFACE LIFT (POLYMERIZED)
[BITUMINOUS PRIME/RC 70 (FOG COAT) REQUIRED BETWEEN SUCESSIVE LIFTS]

② COST INCLUDED WITH SOIL-LIME MIXTURE, 12"

③ MATERIAL USED FOR AGGREGATE SHOULDERS, TYPE A CAN BE USED IN THIS LOCATION

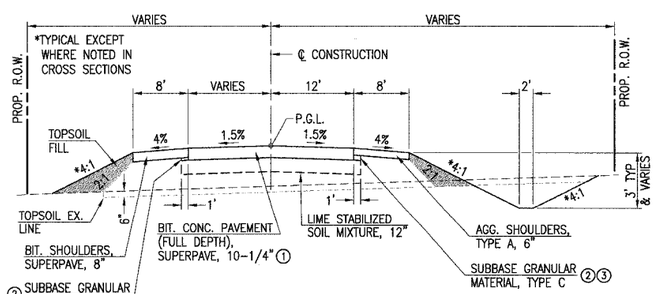

PROPOSED TYPICAL SECTION

OAK HILL ROAD
STA 184+02.49 – STA 186+06.56
SEE INTERSECTION DETAIL, SHEET 37

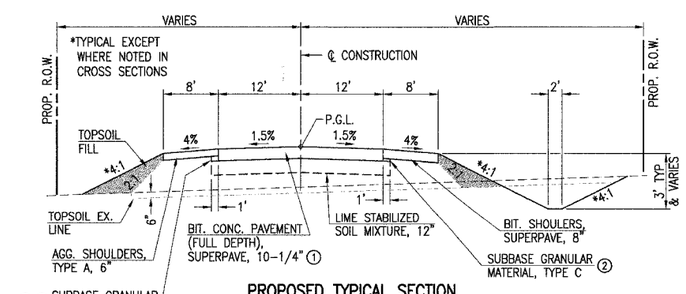

PROPOSED TYPICAL SECTION

OAK HILL ROAD
STA 194+33.00 – STA 195+33.00

TYPICAL SECTIONS
SEC. 03-00167-04-FP
CARDINAL HILL ROAD (C.H. 37)
SANGAMON COUNTY

SHEET 3 OF 5

HANSON
Hanson Professional Services Inc.
1525 South Sixth Street, Springfield, IL 62703
Registration No. 184-001084
© Copyright Hanson Professional Services Inc. 2006

JOB NO. 03S2035B
DATE 6/21/06

LAYOUT	BJB	3/15/04
DRAWN	BJB	7/22/04
REVIEWED	LDK	7/21/04

I:\03JOBS\03S2035B\CIVIL\SHEET\C-501TYP.DWG JUL 21, 2006 9:36AM BJB