STATE OF ILLINOIS
DEPARTMENT OF TRANSPORTATION

** DIST 8 ITS 2006-2
*** MADISON & ST. CLAIR & CITY OF ST. LOUIS, MO

ROUTE NO.	SECTION	COUNTY	TOTAL SHEETS	SHEET NO.
FAI 55/70	**	***	52	48
FED. ROAD DIST. NO. 7		ILLINOIS	FED. AID PROJECT-	

SHEET NO. 3
6 SHEETS

Contract #76973

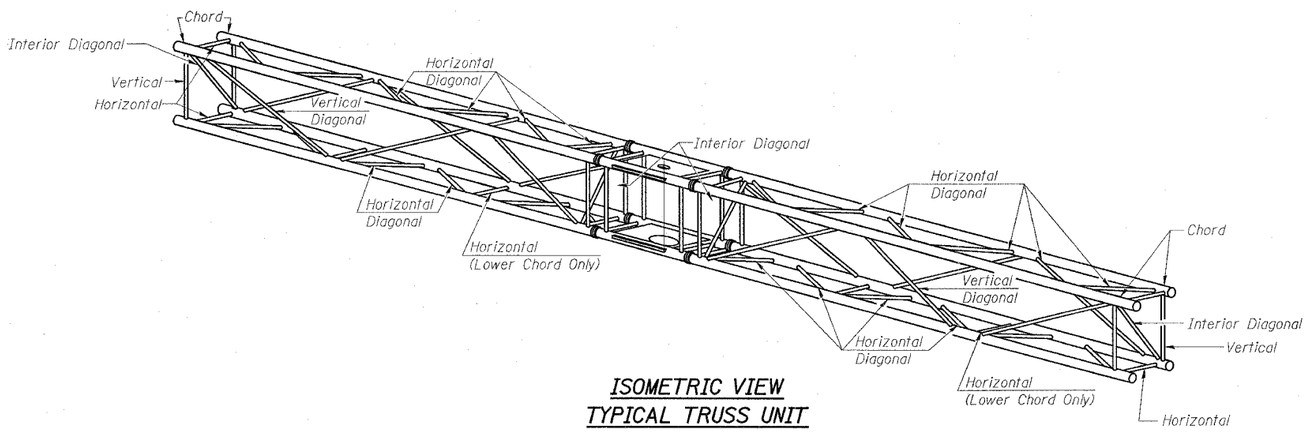

ISOMETRIC VIEW TYPICAL TRUSS UNIT

ASTM B221 Alloy 6061 Temper T6

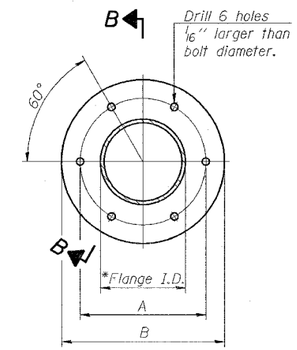

SPLICING FLANGE

ASTM b221, Alloy 6061-T6
or ASTM B209, Alloy 6061-T651

* To fit O.D. of Chord with maximum gap of 1/16".

(1) Splicing Flanges shall be attached to each truss unit with the truss shop assembled to camber shown. Truss units shall be in proper alignment and flange surfaces shall be shop bolted into full contact before welding. Sufficient external welds or tacks shall be made to secure flanges until remaining welds are made after disassembly. Adjacent flanges shall be "match marked" to insure proper field assembly.

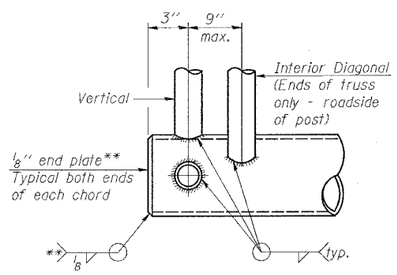

BUTTERFLY END JOINT DETAIL

** Contractor may alternatively use standard aluminum drive-fit cap to close ends.

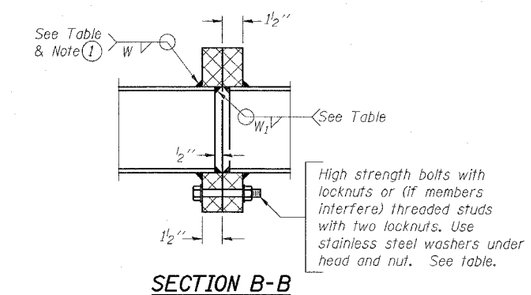

SECTION B-B

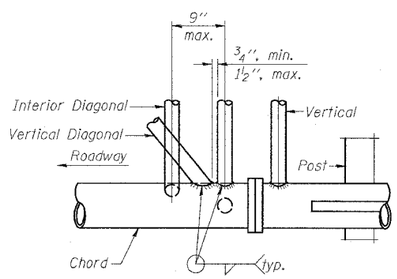

POST END JOINT DETAIL

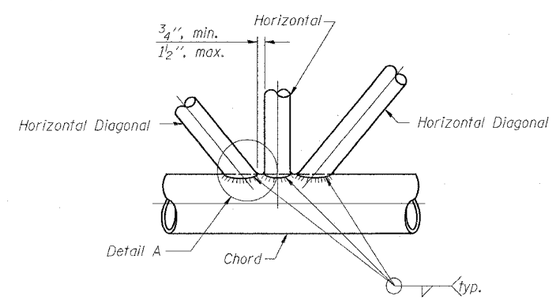

TRUSS INTERIOR JOINT DETAIL

Truss Type	Bolts Dia.	Weld Sizes W	Weld Sizes W_1	A	B
I-F-A	7/8"	5/16"	1/4"	8 3/4"	11 3/4"

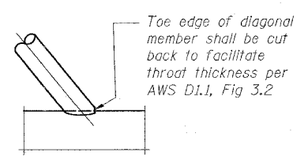

DETAIL A

BUTTERFLY SIGN STRUCTURES
TRUSS DETAILS FOR FRONT ACCESS VMS
ALUMINUM TRUSS & STEEL POST

FAI 55/70
SECTION DIST 8 ITS 2006-2
MADISON AND ST. CLAIR COUNTY
AND ST. LOUIS, MO

DESIGNED -	
CHECKED -	
DRAWN -	
CHECKED -	

- 200
EXAMINED
ENGINEER OF BRIDGE DESIGN
PASSED
ENGINEER OF BRIDGES AND STRUCTURES

OSF-A-2A-VMS 1-7-05

PLOT DATE = 5/23/2006
FILE NAME = c:\pw_pwd\wd11685\electrical\tspini...5a.dgn
PLOT SCALE = 100.4623 ' / IN.
REFERENCE = REF