ROUTE	SECTION	COUNTY	TOTAL SHEETS	SHEET NO.
*	**	***	52	35
STA.		TO STA.		
FED. ROAD DIST. NO. _	ILLINOIS	FED. AID PROJECT		

* FAI 55/70 CONTRACT# 76973
** DIST 8 ITS 2006-2
*** MADISON & ST. CLAIR & CITY OF ST. LOUIS, MO

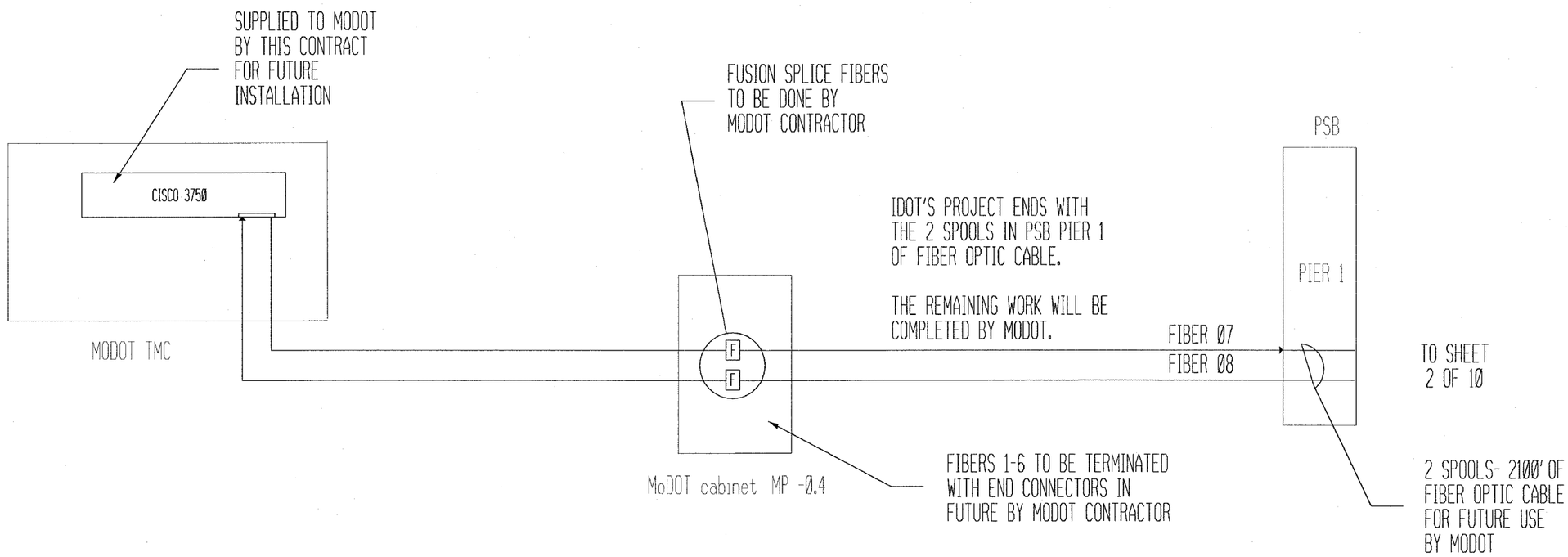

MODOT TMC/ MODOT MP-0.4 CABINET/ PSB PIER 1
COMMUNICATION SHEET 1 OF 10

REVISIONS NAME	DATE

ILLINOIS DEPARTMENT OF TRANSPORTATION

MODOT CONNECTIONS

FAI 55/70
SECTION DIST 8 ITS 2006-2
MADISON AND ST. CLAIR COUNTY
AND ST. LOUIS, MO

DATE 5/23/2006

PLOT DATE = 5/23/2006
FILE NAME = c:\pw_projects\sdi1605\electrical\itsphi1605a.dgn
PLOT SCALE = 100.0000 ' / IN.
REFERENCE = REF