F.A. RTE.	SECTION	COUNTY	TOTAL SHEETS	SHEET NO.
42	101RS-6	MONTGOMERY	16	14
STA.		TO STA.		
FED. ROAD DIST. NO.	ILLINOIS	FED. AID PROJECT		

CONTRACT NO. 72816

DETAILS OF MAILBOX TURNOUTS

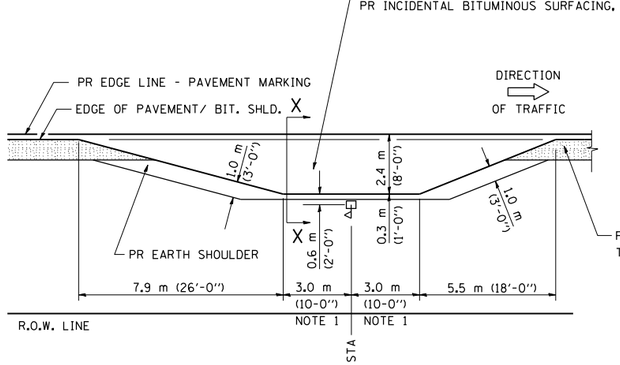

PLAN - MAILBOX TURNOUTS

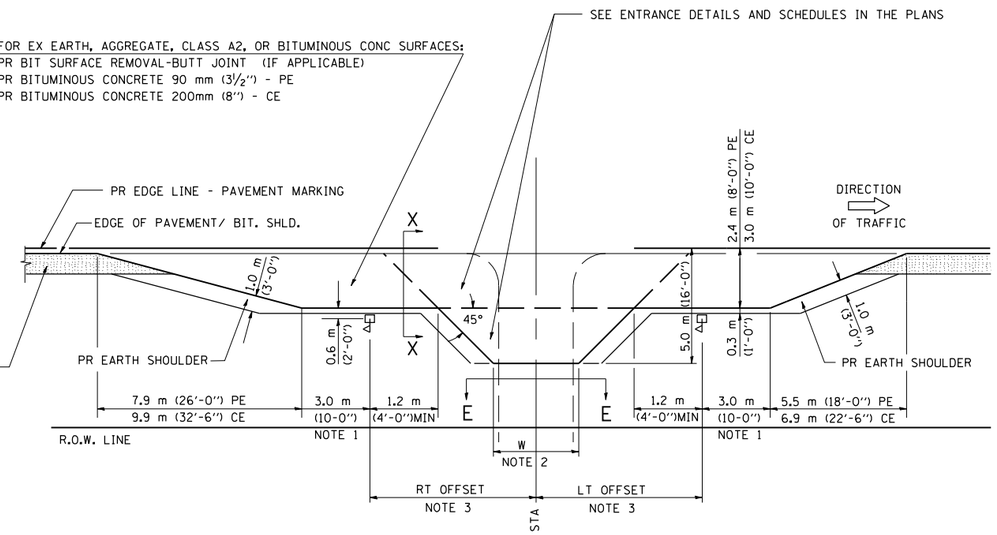

PLAN - COMBINED MAILBOX TURNOUT WITH TRAILING OR LEADING ENTRANCE

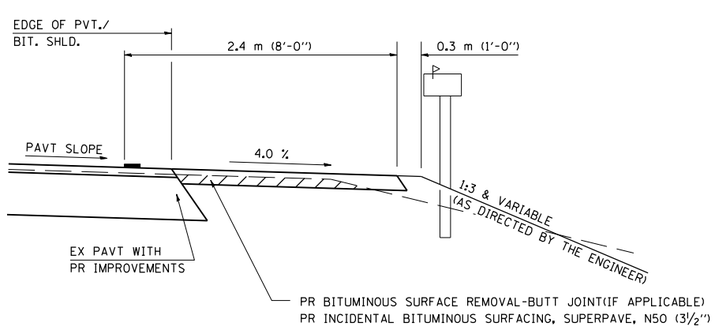

SECTION X-X THRU MAILBOX TURNOUT
ALSO APPLIES TO MAILBOX TURNOUTS COMBINED WITH
EX EARTH, AGGREGATE, OR BITUMINOUS PE & FE

(DETAIL APPLIES WHEN M.B. TURNOUT DOES NOT EXIST.
IF EXISTING, TREAT SAME AS ENTRANCE.)

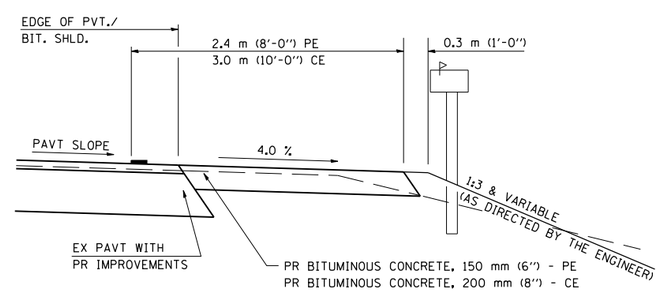

SECTION X-X THRU MAILBOX TURNOUT
COMBINED WITH EX BITUMINOUS CONC & PC CONC PE & CE

(DETAIL APPLIES WHEN M.B. TURNOUT DOES NOT EXIST.
IF EXISTING, TREAT SAME AS ENTRANCE.)

NOTE 1 IF MORE THAN ONE MAILBOX IS PRESENT, DIMENSION FROM CENTER OF END MAILBOX.

NOTE 2 FOR ENTRANCE LAYOUT DIMENSIONS AND SECTIONS A-A & E-E REFER TO THE SCHEDULES IN THE PLANS.

NOTE 3 BOTH LT OR RT OFFSETS FOR MAILBOX SHOWN USE OFFSET DIMENSION PER SCHEDULE AND REFER TO LAYOUT SHOWN ON THE PLAN.

ALL DIMENSIONS ARE IN MILLIMETERS (INCHES)
UNLESS OTHERWISE SHOWN.

SHEET 2 OF 3

REVISIONS	
NAME	DATE

ILLINOIS DEPARTMENT OF TRANSPORTATION

FAP ROUTE 42 (IL 48 / IL 127)
SECTION 101RS-6
MONTGOMERY COUNTY

DIST. 6 MAILBOX TURNOUT DETAILS

SCALE: DRAWN BY DLB
DATE CHECKED BY CAS

ENT PPP

DGN-SPEC
DATE-TIME $TIME$ *USER*