STATE OF ILLINOIS
DEPARTMENT OF TRANSPORTATION

ROUTE NO.	SECTION	COUNTY	TOTAL SHEETS	SHEET NO.
F.A.S. 1671	‡	DOUGLAS	181	100
FED. ROAD DIST. NO. 7		ILLINOIS	FED. AID PROJECT-	

SHEET NO. 16
46 SHEETS

Contract #70258
‡ 22VBR-1 and 144SBR-2

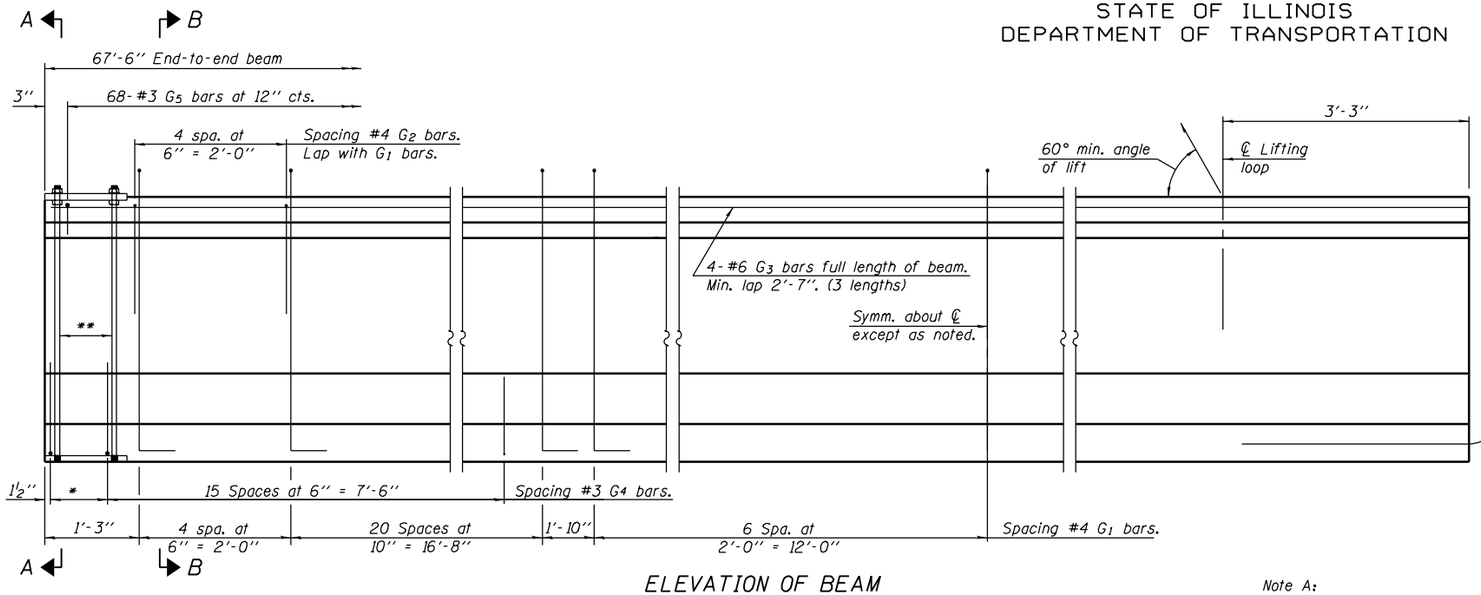

ELEVATION OF BEAM
(Showing reinforcement & dimensions)

* 3 spaces at 3" = 9".
** 4-¾" ϕ threaded dowel rods at 3" cts., each face.

Note A:
Hex nuts (top and bottom) with lock washers (top). Only tighten sufficiently to compress lock washers.

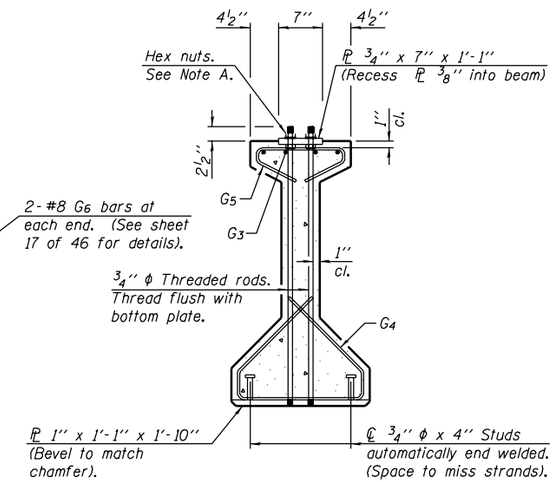

SECTION A-A

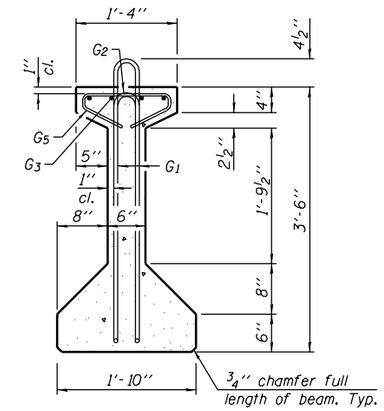

SECTION B-B

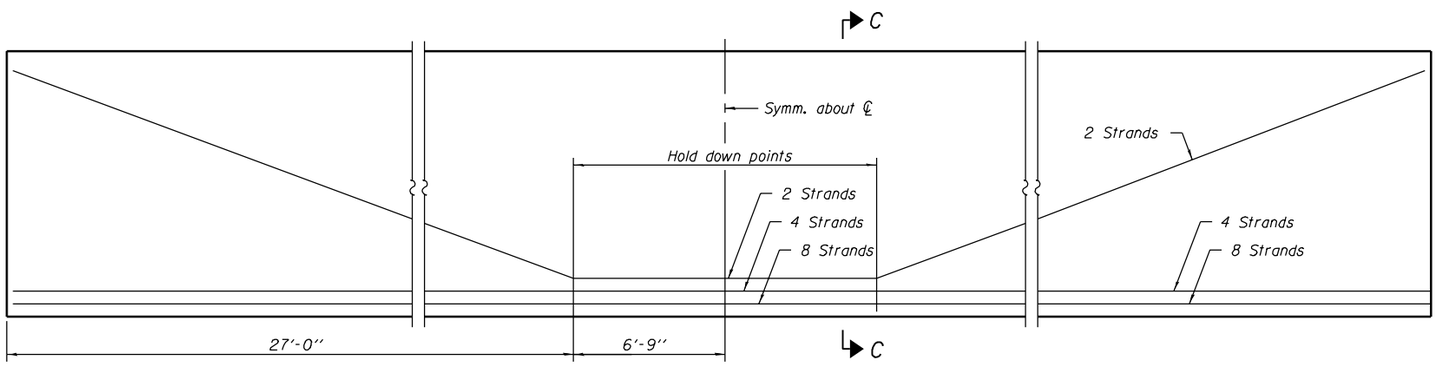

ELEVATION OF BEAM
(Showing prestressing steel)

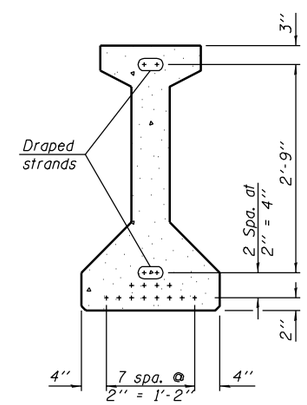

SECTION C-C

BAR LIST
ONE BEAM ONLY

Bar	No.	Size	Length	Shape
G_1	63	#4	8'-5"	
G_2	10	#4	4'-4"	
G_3	12	#6	24'-2"	
G_4	38	#3	4'-11"	
G_5	68	#3	2'-6"	
G_6	4	#8	3'-9"	

Notes:
See sheet 17 of 46 for additional details and Bill of Material.
Required release strength, f'ci, shall be 5000 psi.

DESIGNED	Curt M. Evoy
CHECKED	Rebecca L. Tharp
DRAWN	Michael B. Mossman
CHECKED	C.M.E. / R.L.T.

August 4, 2006
EXAMINED Thomas J. Domagalski
ENGINEER OF BRIDGE DESIGN
PASSED Ralph E. Anderson
ENGINEER OF BRIDGES AND STRUCTURES

PI-4-42 7-15-05

42" PPC I-BEAM (SPAN 2)
F.A.S. RT. 1671 - SEC. 22VBR-1
DOUGLAS COUNTY
STATION 1151+65.86
STRUCTURE NO. 021-0061