F.A.I. RTE.	SECTION	COUNTY	TOTAL SHEETS	SHEET NO.
90/94	*	COOK	565	3
STA.		TO STA.		
FED. ROAD DIST. NO. 1	ILLINOIS	FED. AID PROJECT		

62301 * (2021-922 PT2 ETC 2324.6-1P) R-10

GENERAL NOTES:

1. THE LOCATIONS OF EXISTING UTILITIES, AS SHOWN ON THE DRAWINGS, REPRESENT DATA RECEIVED FROM VARIOUS SOURCES. IT IS NOT GUARANTEED TO BE CORRECT OR ALL INCLUSIVE. THE CONTRACTOR SHALL CONDUCT HIS OWN INVESTIGATIONS INTO THE LOCATION, SIZE, DEPTH, AND NATURE OF ANY AND ALL EXISTING UTILITIES WHICH MAY IMPACT THE WORK UNDER THIS CONTRACT. ANY EXISTING UTILITIES WHICH ARE TO REMAIN IN SERVICE SHALL BE FULLY PROTECTED BY THE CONTRACTOR AND ANY DAMAGE CAUSED BY THE CONSTRUCTION SHALL BE IMMEDIATELY REPAIRED AT THE CONTRACTOR'S EXPENSE TO THE SATISFACTION OF THE ENGINEER. THE CONTRACTOR SHALL BE RESPONSIBLE FOR THE PROTECTION OF ANY AND ALL SURFACE AND UNDERGROUND UTILITIES, EVEN THOUGH THEY MAY NOT BE IDENTIFIED ON THE PLANS.
2. THE CONTRACTOR SHALL COORDINATE CONSTRUCTION ACTIVITIES WITH THE RESPECTIVE UTILITIES OF THE CITY OF CHICAGO. BEFORE STARTING ANY EXCAVATION, THE CONTRACTOR SHALL CALL THE CHICAGO UTILITY ALERT NETWORK (C.U.A.N.) AT (312) 744-7000 FOR FIELD LOCATIONS OF BURIED ELECTRICAL, TELEPHONE, CABLE, AND GAS FACILITIES (48 HOURS NOTIFICATION IS REQUIRED). THE CONTRACTOR SHALL CONTACT THE CITY OF CHICAGO DEPARTMENT OF WATER MANAGEMENT, PERMIT SECTION AT (312) 747-7893 FOR WATER AND CITY SEWER LOCATIONS.
3. 10 FOOT TRANSITION LENGTHS SHALL BE USED TO MATCH PROPOSED CURB AND GUTTER AND MEDIAN ITEMS OF WORK TO EXISTING CURBS AND GUTTERS AND MEDIANS IN THE FIELD UNLESS OTHERWISE SHOWN. THE TRANSITIONS SHALL BE PAID FOR AT THE CONTRACT UNIT PRICE FOR THE PROPOSED ITEMS OF WORK SPECIFIED.
4. THE CONTRACTOR WILL NOT BE ALLOWED TO SET UP A YARD OR FIELD OFFICE ON STATE PROPERTY WITHOUT WRITTEN PERMISSION FROM IDOT.
5. WHEN ARTIFICIAL LIGHTING IS USED IN NIGHT OPERATIONS, THE CONTRACTOR SHALL EXERCISE THE UTMOST PRECAUTIONS IN PREVENTING ADVERSE VISIBILITY TO THE MOTORING PUBLIC AND ADJOINING COMMERCIAL AND RESIDENTIAL AREAS.
6. ON STATE STANDARD 483001, SUBBASE GRANULAR MATERIAL, TYPE B, 24" SHALL BE USED AS THE IMPROVED SUBGRADE. THE ADDITIONAL THICKNESS OF AGGREGATE SUBGRADE UNDER THE SHOULDER SHALL BE INCLUDED IN THE COST PER SQ YARD OF "SUB-BASE GRANULAR MATERIAL, TYPE B, 24"".
7. USE NO. 6 EPOXY-COATED TIE BARS CONFORMING TO ARTICLE 1006.10(B)(2) OF THE STANDARD SPECIFICATIONS FOR LONGITUDINAL SAWED JOINT AS SHOWN ON IDOT STANDARD 420001 AND FOR TYING THE CURB AND GUTTER SECTIONS TO THE MAINLINE SHOULDERS AND PAVEMENT AS SHOWN ON THE PLANS. THE TIE BARS WILL NOT BE PAID FOR SEPARATELY. TIE BARS USED FOR LONGITUDINAL CONSTRUCTION JOINTS SHALL BE INCLUDED IN THE COST OF CONT REINFORCED PCC PAVEMENT, 14". TIE BARS USED WITH CURB AND GUTTER SHALL BE INCLUDED IN THE COST OF THE COMBINATION CONCRETE CURB AND GUTTER OF THE TYPE SPECIFIED.
8. USE NO. 8 EPOXY-COATED TIE BARS IN LIEU OF NO. 6 BARS, CONFORMING TO ARTICLE 1006.10(B)(2) OF THE STANDARD SPECIFICATIONS FOR LONGITUDINAL CONSTRUCTION JOINT AS SHOWN ON IDOT STANDARD 420001 AND FOR TYING SHOULDER SECTIONS TO THE MAINLINE PAVEMENT AND FOR TYING PCC CONCRETE WIDENING TO EXISTING CONCRETE PAVEMENT AND FOR TYING RAMP PAVEMENT TO EXISTING FRONTAGE ROAD CONCRETE BASE COURSE, AS SHOWN ON THE PLANS. TIE BARS USED FOR LONGITUDINAL CONSTRUCTION JOINTS SHALL BE INCLUDED IN THE COST OF CONT REINFORCED PCC PAVEMENT, 14". TIE BARS USED WITH THE SHOULDERS SHALL BE INCLUDED IN THE COST OF PCC SHOULDERS, 14". ALL OTHER TIE BARS SHALL BE INCLUDED IN THE COST OF PCC BASE COURSE, 9".
9. WHEN MILLED PAVEMENT IS OPEN TO TRAFFIC, THE MAXIMUM GRADE DIFFERENTIAL BETWEEN PASSES OF THE MILLING MACHINE SHALL NOT EXCEED 1½ INCHES WHERE THE SPEED LIMIT IS 45 MPH OR LESS AND 1 INCH WHERE THE SPEED LIMIT IS GREATER THAN 45 MPH. WITH WRITTEN APPROVAL FROM THE ENGINEER, A MAXIMUM GRADE DIFFERENTIAL OF 3 INCHES MAY BE ALLOWED IF THE EDGE OF THE MILLING IS SLOPED A MINIMUM 3:1 (H:V).
10. CHAIN LINK FENCE REMOVAL SHALL BE CONSIDERED AS PART OF CLEARING.
11. THE VARIATION IN WIDTH OF THE COMBINATION CONCRETE CURB AND GUTTER AS SHOWN ON THE PLANS SHALL BE INCLUDED IN THE COST OF COMBINATION CONCRETE CURB AND GUTTER OF THE TYPE SPECIFIED.
12. COMBINATION CURB AND GUTTER REMOVAL WILL BE MEASURED PER LINEAL FOOT. THE REMOVAL OF THE EXISTING BITUMINOUS OVERLAY OF THE GUTTER WILL NOT BE MEASURED FOR PAYMENT BUT IS INCLUDED IN THE CONTRACT UNIT PRICE FOR COMBINATION CURB AND GUTTER REMOVAL.
13. IT SHALL BE THE CONTRACTOR'S RESPONSIBILITY TO ENSURE THAT NO GAP REMAINS BETWEEN PROPOSED FENCING OR WHERE PROPOSED FENCING TERMINATES AND EXISTING FENCE REMAINS IN PLACE.
14. THE CONTRACTOR SHALL TAKE ALL NECESSARY SAFETY PRECAUTIONS TO PROTECT AND PROVIDE ACCESS TO ABUTTING PROPERTY, UTILITIES, PEDESTRIANS, AND VEHICULAR TRAFFIC.
15. WHERE SECTION OR SUBSECTION MONUMENTS ARE ENCOUNTERED, THE ENGINEER SHALL BE NOTIFIED BEFORE SUCH MONUMENTS ARE REMOVED. THE CONTRACTOR SHALL PROTECT AND CAREFULLY PRESERVE ALL PROPERTY MARKS AND MONUMENTS. THE ENGINEER OR AN AUTHORIZED SURVEYOR AGENT WILL WITNESS OR OTHERWISE REFERENCE AND RESET MONUMENTS AS NECESSARY. ALL PROPERTY CORNERS EXCEPT THOSE WITHIN AREAS WHERE THE SCHEDULE, IF PROVIDED, SHOWS PLACEMENT OF R.O.W. MARKERS SHALL REMAIN UNDISTURBED.
16. ALL ELEVATIONS IN THIS PLAN SET ARE BASED ON THE CHICAGO CITY DATUM. THE CONVERSION EQUATION FROM CCD TO NAVD 88 IS: NAVD 88 ELEVATION = CCD + 579.19.
17. BARRICADES: THE CONTRACTOR SHALL PROVIDE AND INSTALL TWO WEIGHTED SANDBAGS ON EACH TYPE I OR TYPE II BARRICADE USED - ONE WEIGHTED SANDBAG ACROSS EACH BOTTOM RAIL. ALL TYPE III BARRICADES REQUIRE A MINIMUM OF FOUR SANDBAGS PER BARRICADE.
18. BUTT JOINTS WILL BE INSTALLED AT THE ENDS OF ALL RESURFACING (WHERE RESURFACING MEETS EXISTING PAVEMENT), IN ACCORDANCE WITH THE IDOT DISTRICT 1 "BUTT JOINT AND BITUMINOUS TAPER DETAILS" SHEET INCLUDED IN THE PLANS, UNLESS OTHERWISE SPECIFIED.
19. THE UNIT WEIGHT USED FOR ALL BITUMINOUS SURFACE MIXTURES IS 112 LB/SQ YD/IN.
20. THE QUANTITY FOR BITUMINOUS MATERIALS (PRIME COAT) WAS DETERMINED USING AN APPLICATION RATE OF 0.002 TONS/SQ YD ON GRANULAR BASES, 0.0004 TONS/SQ YD ON COLD MILLED SURFACES, AND 0.00012 TONS/SQ YD ON ALL BITUMINOUS LIFTS.
21. THE QUANTITY FOR AGGREGATE (PRIME COAT) WAS DETERMINED USING AN APPLICATION RATE OF 0.002 TONS/SQ YD ON COLD MILLED SURFACES AND 0.001 TONS/SQ YD ON ALL BITUMINOUS LIFTS.
22. SUPERSTRUCTURE RATING COARSE AGGREGATE SHALL BE USED IN THE CONCRETE BARRIER WALL CONCRETE MIXTURE.
23. LOCATIONS OF ACCESS CONTROL FENCING AS SHOWN ON THE PLANS MAY BE ADJUSTED AS DIRECTED BY THE ENGINEER TO BETTER FIT FIELD CONDITIONS.
24. THE LOCATION OF VARIOUS ITEMS SUCH AS PAVEMENT, BARRIER WALLS, AND DRAINAGE STRUCTURES BUILT IN CONTRACTS UNDER CONSTRUCTION DURING THE PREPARATION OF THESE PLANS IS BASED ON THE PUBLISHED CONTRACT PLAN DRAWINGS AVAILABLE DURING DESIGN. THE CONTRACTOR SHALL FIELD VERIFY LIMITS, LOCATIONS AND ELEVATIONS OF THESE PREVIOUSLY CONSTRUCTED ITEMS.
25. CRUSHING PLANT AND CONCRETE PLANT LOCATIONS REQUIRE CITY OF CHICAGO APPROVAL.
26. TEMPORARY CONCRETE BARRIER - THE BARRIER UNIT AT EACH END OF THE INSTALLATIONS SHALL BE SECURED TO THE PAVEMENT OR SHOULDER USING THREE ANCHORING PINS FOR F SHAPE OR THREE DOWEL BARS FOR NEW JERSEY SHAPE.
27. HAMMER DRIVING OF PILES WILL NOT BE ALLOWED. ALL PILES SHALL BE VIBRATED INTO PLACE.
28. THE CONCRETE MEDIAN SURFACE, 6" (SPECIAL) AT GUARDRAIL LOCATIONS SHALL USE THE INTEGRAL RED CONCRETE WITHOUT THE BRICK PATTERN FINISH.
29. THE CONTRACTOR IS ALERTED THAT THERE ARE EXISTING CTA UTILITY FACILITIES WITHIN, ADJACENT TO, AND CROSSING UNDER THE EXPRESSWAY FROM THE FRONTAGE ROADS TO THE CTA OPERATING AREA. THE EXACT LOCATION OF THESE FACILITIES IS NOT KNOWN. THE CONTRACTOR SHALL CONTACT THE CTA AT 312-681-3860 FOR LOCATIONS OF THESE FACILITIES BEFORE PROCEEDING WITH ANY WORK WITHIN OR ADJACENT TO THE CTA OPERATING AREA.
30. THE CONTRACTOR SHALL USE CARE IN GRADING OR EXCAVATING NEAR ANY AND ALL EXISTING ITEMS THAT WILL NOT BE REMOVED. ANY DAMAGE DONE TO EXISTING ITEMS BY THE CONTRACTOR SHALL BE REPAIRED BY THE CONTRACTOR AT THE CONTRACTOR'S OWN EXPENSE.
31. THE CONTRACTOR SHALL MAINTAIN THE SURFACE DRAINAGE OF ALL ROADWAYS DURING CONSTRUCTION OF THIS PROJECT. WHEN EXISTING DRAINAGE FACILITIES ARE DISTURBED. THE CONTRACTOR SHALL PROVIDE AND MAINTAIN TEMPORARY OUTLETS AND CONNECTIONS FOR ALL PRIVATE OR PUBLIC DRAINS, SEWERS, AND CATCH BASINS. THE CONTRACTOR SHALL PROVIDE FACILITIES TO TAKE IN ALL STORM WATER WHICH WILL BE RECEIVED BY THESE DRAINS AND SEWERS AND DISCHARGE THE SAME. THE CONTRACTOR SHALL PROVIDE AND MAINTAIN A TEMPORARY OUTLET AND BE PREPARED AT ALL TIMES TO DISPOSE OF THE WATER RECEIVED FROM THESE TEMPORARY CONNECTIONS UNTIL INSTALLATION IS COMPLETE INCLUDING PAVEMENT. THIS WORK SHALL NOT BE PAID FOR SEPARATELY BUT SHALL BE CONSIDERED INCLUDED IN THE COST OF THIS CONTRACT.
32. ALL REFERENCES IN THE PLANS TO STABILIZED SUB-BASE 4" OR STABILIZED SUB-BASE 6" SHALL BE INTERPRETED TO MEAN STABILIZED SUB-BASE 4 ½".

PROJECT COMMITMENTS:

1. IDOT WILL CONTINUE TO COORDINATE WITH THE CITY OF CHICAGO DEPARTMENT OF TRANSPORTATION (CDOT) AND THE CHICAGO TRANSPORTATION AUTHORITY (CTA) USING THE "DAN RYAN EXPRESSWAY LANDSCAPE GUIDELINES", PREPARED BY CDOT AS GUIDELINES THROUGHOUT PHASE II OF THE PROJECT (PREPARATION OF CONTRACT PLANS) ON THE AESTHETICS AND LANDSCAPING TREATMENTS.
2. THE ILLINOIS STATE GEOLOGICAL SURVEY (ISGS) CONDUCTED A PRELIMINARY ENVIRONMENTAL SITE ASSESSMENT (PESA) IN WHICH THEY ASSESSED A HIGH RISK FOR THE OCCURRENCE OF HAZARDOUS MATERIALS. A SPECIAL WASTE WAVER HAS BEEN APPROVED WHICH ALLOWS DESIGN APPROVAL TO BE GRANTED PRIOR TO THE COMPLETION OF SPECIAL WASTE STUDIES. THERE ARE STILL OUTSTANDING SPECIAL WASTE ISSUES THAT MUST BE ADDRESSED. THE ENVIRONMENTAL STUDIES UNIT SHOULD BE CONTACTED AT (847) 705-4101 TO DISCUSS THESE ISSUES. TO DETERMINE THE IMPLICATIONS OF FUTURE DESIGN CHANGES, PLEASE REFER TO THE PESA REVIEW COVER MEMOS FOR ISGS #1106A, AS DEPICTED IN EXHIBIT 7 - SPECIAL WASTE WAIVER IN THE CLASS OF ACTION DETERMINATION (ECAD).
3. IDOT HAS COMMITTED TO ADDRESS CONSTRUCTION RELATED AIR QUALITY CONCERNS. THESE STRATEGIES INCLUDE REQUIRING DETAILED DUST CONTROL PLANS, REQUIRING THE USE OF CLEANER BURNING DIESEL FUELS ON CERTAIN DIESEL POWERED CONSTRUCTION EQUIPMENT AND/OR THE INSTALLATION OF EXHAUST EMISSION SCRUBBERS, AND THE REDUCTION OF CONSTRUCTION EQUIPMENT IDLING TIMES. THESE STRATEGIES ARE ADDRESSED IN SPECIAL PROVISIONS INCLUDED IN THIS CONTRACT AND DEVELOPED FOR THE DAN RYAN RECONSTRUCTION PROJECT.
4. IDOT HAS COMMITTED TO REDUCE TIRE-PAVEMENT HIGHWAY TRAFFIC NOISE FOR THE FINISHED PROJECT BY INCLUDING A SPECIAL APROVISION TO INCORPORATE VARIABLE WIDTH AND SKEWED "TINING" OF THE NEW CONCRETE PAVEMENT.
5. IDOT REQUIRES THE PREPARATION (BY THE CONTRACTOR) OF PRE-CONSTRUCTION PHOTO AND/OR VIDEO LOGS OF STRUCTURES DIRECTLY ADJACENT TO THE HIGHWAY R.O.W. TO DOCUMENT STRUCTURAL CONDITION PRIOR TO DAN RYAN RECONSTRUCTION.

GENERAL NOTES: CITY OF CHICAGO

(CITY OF CHICAGO NOTES APPLY ONLY TO WORK ON THE WELLS STREET/WENTWORTH AVENUE FRONTAGE ROAD.)

1. ALL CATCH BASINS IN THE CITY OF CHICAGO SHALL MEET THE DEPARTMENT OF WATER MANAGEMENT STANDARDS.
2. SEWER SIZES 21" DIAMETER OR SMALLER SHALL BE EXTRA STRENGTH VITRIFIED CLAY PIPE C-700 OR DUCTILE IRON PIPE WITH PUSH-ON OR MECHANICAL JOINTS. SEWER SIZES 24" DIAMETER OR LARGER SHALL BE REINFORCED CONCRETE PIPE TYPE C-76, CLASS III, WALL "B" WITH "O-RING" JOINTS.
3. A PERMIT FROM THE DEPARTMENT OF WATER MANAGEMENT IS REQUIRED IN ADVANCE FOR ANY UNDERGROUND SEWER WORK INCLUDING ADJUSTMENT OF STRUCTURES, REMOVAL/REPLACEMENT OF FRAMES AND LIDS, TELEVISION SURVEYS, CLEANING, LINING, AND INSPECTIONS. THE DEPARTMENT OF WATER MANAGEMENT PERMIT SHALL BE OBTAINED BY A LICENSED SEWER DRAIN LAYER PRIOR TO START OF CONSTRUCTION. THE LICENSED SEWER CONTRACTOR/SUBCONTRACTOR SHALL SUBMIT TWO SETS OF PLANS APPROVED BY THE DEPARTMENT OF WATER MANAGEMENT FOR THE ISSUE OF THE SEWER PERMIT TO 333 SOUTH STATE STREET, SUITE 410, CHICAGO, IL 60604. INSPECTION WILL BE PROVIDED BY THE DEPARTMENT OF WATER MANAGEMENT.
4. IF THE SEWER PIPE COVER IS REDUCED TO LESS THAN 3 FEET, CONCRETE ENCASEMENT OF THE SEWER OR REPLACEMENT OF THE SEWER WITH CLASS 52 DUCTILE IRON PIPE WILL BE REQUIRED. THIS WORK WILL BE PAID FOR AS COMBINED SEWERS OR STORM SEWERS (WATER MAIN REQUIREMENTS) FOR THE DIAMETER SPECIFIED.
5. IN CASE OF DAMAGE TO CITY OF CHICAGO SEWERS, PRIVATE AND PUBLIC DRAINS, SEWER STRUCTURES AND/OR BENCH MONUMENTS, THE CONTRACTOR SHALL IMMEDIATELY CONTACT THE DEPARTMENT OF WATER MANAGEMENT AT (312) 747-7892 OR (312) 747-7893.
6. BENCH MONUMENT LOCATIONS WITHIN THE LIMITS OF THE IMPROVEMENT CAN BE OBTAINED FROM THE DEPARTMENT OF WATER MANAGEMENT AT 333 SOUTH STATE STREET, SUITE 410, CHICAGO, IL 60604. THE CONTRACTOR IS RESPONSIBLE FOR THE COST OF REPLACING ANY BENCH MONUMENT DAMAGED OR DESTROYED DURING CONSTRUCTION.
7. IN LOCATIONS WHERE THE MAIN SEWERS, DRAINAGE STRUCTURES, PUBLIC, AND PRIVATE DRAIN CONNECTIONS ARE DISTURBED OR DAMAGED DURING CONSTRUCTION BY THE CONTRACTOR, IT WILL BE THE CONTRACTOR'S RESPONSIBILITY TO RESTORE AND REPLACE THE DAMAGED FACILITIES AT HIS/HER OWN EXPENSE TO THE SATISFACTION OF THE DEPARTMENT OF WATER MANAGEMENT. THE SEWER FLOWS SHALL BE MAINTAINED AT ALL TIMES.
8. EXTREME CAUTION IS TO BE TAKEN TO ENSURE THAT NO FACILITY OWNED AND MAINTAINED BY THE DEPARTMENT OF WATER MANAGEMENT IS DAMAGED DURING CONSTRUCTION. IF ANY DAMAGE OCCURS TO ANY FACILITIES, THE CONTRACTOR WILL BE HELD RESPONSIBLE FOR THE COST OF REPAIRING OR REPLACING THEM.
9. CLOSED LIDS SHALL BE PLACED ON ALL MANHOLES EXCEPT AT INTERSECTIONS. PERFORATED LIDS SHALL BE PLACED ON ALL CATCH BASINS.
10. ALL BROKEN, CRACKED, WORN OR OTHERWISE DAMAGED OR BICYCLE UNSAFE FRAMES AND GRATES OR LIDS ON SEWER STRUCTURES SHALL BE REPLACED WITH NEW DEPARTMENT OF WATER MANAGEMENT STANDARD FRAMES AND GRATES OR LIDS. OLD FRAMES AND GRATES OR LIDS SHALL BE DELIVERED TO THE DEPARTMENT OF WATER MANAGEMENT AT 39TH STREET AND ASHLAND AVENUE.
11. CITY OF CHICAGO WATER VALVE VAULTS AND SEWER STRUCTURES SHALL NOT BE CLOSED, COVERED OR OTHERWISE OBSTRUCTED DURING CONSTRUCTION WITHOUT WRITTEN PERMISSION FROM THE CITY OF CHICAGO DEPARTMENT OF WATER MANAGEMENT.
12. CURB AND GUTTER CONSTRUCTION SHALL PROVIDE A MINIMUM CURB HEIGHT OF 3".
13. PAVEMENT REPLACEMENT AROUND FRAMES AND GRATES OR LIDS WHERE DRAINAGE, WATER MAIN OR ELECTRICAL STRUCTURES ARE ADJUSTED OR RECONSTRUCTED, SHALL BE WITH CLASS SI CONCRETE.
14. THE CHICAGO TRANSIT AUTHORITY (CTA) HAS BUS OPERATIONS ALONG WENTWORTH AVENUE/WELLS STREET. THE CONTRACTOR SHALL INFORM THE CTA REPRESENTATIVE MARVIN A. WATSON (GENERAL MANAGER CONSTRUCTION) OF THE ON-GOING PROJECT SCHEDULE STARTING 28 DAYS BEFORE THE START OF CONSTRUCTION AT (312) 733-7000 EXTENSION 7008.
15. ALL SEWER CONNECTIONS WITH PIPES 21" DIAMETER AND SMALLER SHALL BE MADE WITH PRECAST "TEE" OR "WYE" PIPES. PRECAST "TEE" AND "WYE" PIPE CONNECTIONS FOR PROPOSED SEWER WILL NOT BE PAID FOR SEPARATELY, BUT WILL BE INCLUDED IN THE COST FOR THE SEWERS. FOR PROPOSED SEWER PIPES LARGER THAN 21" DIAMETER, OPENINGS OF THE SPECIFIED DIAMETER SHALL BE MADE IN THE PIPE AT THE TIME IT IS MANUFACTURED. FOR EXISTING SEWERS LARGER THAN 21". CONNECTIONS SHALL BE CORE DRILLED.

CTE | AECOM

REVISIONS	
NAME	DATE
1 ADDENDUM 1	7/27/06

ILLINOIS DEPARTMENT OF TRANSPORTATION
F.A.I. 90/94 (DAN RYAN EXPRESSWAY)
GARFIELD BLVD TO 31ST STREET (NB LOCAL LANES)

GENERAL NOTES AND PROJECT COMMITMENTS

SCALE: NONE DRAWN BY: NJH
DATE: June 9, 2006 CHECKED BY: RMC

P:\P40488\CNTR\B-Cntrs 18 & 19\SHN\Cntr 18\General\GN1B0012.dgn 7/28/2006 8:54:26 AM

F.A.I. RTE.	SECTION	COUNTY	TOTAL SHEETS	SHEET NO.
90/94	*	COOK	565	7
STA.		TO STA.		
FED. ROAD DIST. NO. 1	ILLINOIS	FED. AID PROJECT		
62301	* (2021-922 PT2 ETC 2324.6-1P) R-10			

SUMMARY OF QUANTITIES

					90% FEDERAL / 10% STATE							
					URBAN ROADWAY	RETAINING WALL		MWRD BOX CULVERT	SIGNING	SAFETY	LIGHTING	SURVEILLANCE
						016-W977	43rd-31st					
	CODE NO.	ITEM	UNIT	QUANTITY	J000	Y007	Y007	X0282A	Y002-1C	SFTY-3N	Y030-1E	Y032-1F
	20100110	TREE REMOVAL (6 TO 15 UNITS DIAMETER)	UNIT	858	858							
	20100210	TREE REMOVAL (OVER 15 UNITS DIAMETER)	UNIT	701	701							
	20200100	EARTH EXCAVATION	CU YD	94,292	94,292							
	20200200	ROCK EXCAVATION	CU YD	217	217							
	20200410	EARTH EXCAVATION (SPECIAL)	CU YD	763	763							
	20201200	REMOVAL AND DISPOSAL OF UNSUITABLE MATERIAL	CU YD	9709	9709							
	20700400	POROUS GRANULAR EMBANKMENT, SPECIAL	CU YD	401		267	134					
	20700420	POROUS GRANULAR EMBANKMENT, SUBGRADE	CU YD	1,500	1,500							
	20800150	TRENCH BACKFILL	CU YD	3,902	3,902							
	20900110	POROUS GRANULAR BACKFILL	CU YD	1,967.9	1,967.9							
*	21001000	GEOTECHNICAL FABRIC FOR GROUND STABILIZATION	SQ YD	125,226	125,226							
*	21101615	TOPSOIL FURNISH AND PLACE, 4"	SQ YD	30,724	30,724							
*	21101645	TOPSOIL FURNISH AND PLACE, 12"	SQ YD	32,989	32,989							
*	21101825	COMPOST FURNISH AND PLACE, 6"	SQ YD	32,989	32,989							
*	25000210	SEEDING, CLASS 2A	ACRE	10.30	10.30							
*	25000400	NITROGEN FERTILIZER NUTRIENT	POUND	1,188	1,188							
*	25000500	PHOSPHORUS FERTILIZER NUTRIENT	POUND	1,185	1,185							
*	25000600	POTASSIUM FERTILIZER NUTRIENT	POUND	1,183	1,183							
NP *	25000750	MOWING	ACRE	12.85	12.85							
*	25001800	SEEDING, CLASS 4 (MODIFIED)	ACRE	2.84	2.84							
*	25100630	EROSION CONTROL BLANKET	SQ YD	63,713	63,713							
*	25200200	SUPPLEMENTAL WATERING	UNIT	1,531.4	1,531.4							
	28000250	TEMPORARY EROSION CONTROL SEEDING	POUND	30,641	30,641							
	28000300	TEMPORARY DITCH CHECKS	EACH	8	8							
	28000510	INLET FILTERS	EACH	415	415							
	31101810	SUB-BASE GRANULAR MATERIAL, TYPE B 12"	SQ YD	83,920	83,920							
	31101860	SUB-BASE GRANULAR MATERIAL, TYPE B 24"	SQ YD	41,324	41,324							
	~~31200100~~	~~STABILIZED SUB-BASE 4"~~	~~SQ YD~~	~~8,924~~	~~8,924~~							
	35300410	PORTLAND CEMENT CONCRETE BASE COURSE 9 1/2"	SQ YD	2,219	2,219							
	40600200	BITUMINOUS MATERIALS (PRIME COAT)	TON	205.6	205.6							

NP = NON-PARTICIPATING

* DENOTES SPECIALTY ITEMS

REVISIONS	
NAME	DATE

ILLINOIS DEPARTMENT OF TRANSPORTATION
F.A.I. 90/94 (DAN RYAN EXPRESSWAY)
GARFIELD BLVD TO 31ST STREET (NB LOCAL LANES)

SUMMARY OF QUANTITIES

SCALE: NONE | DRAWN BY: PHP
DATE: June 9, 2006 | CHECKED BY: RMG

CTE | AECOM

Rev. 8-22-06

Rev.

S00-1

p:\p40405\civil\3-ctrls 18 & 19\ctrl\ctrl 18\general\sq800120.dgn 6/8/2006 11:28:30 PM

F.A.I. RTE.	SECTION	COUNTY	TOTAL SHEETS	SHEET NO.
90/94	*	COOK	565	8
STA.		TO STA.		
FED. ROAD DIST. NO. 1	ILLINOIS	FED. AID PROJECT		

62301 * (2021-922 PT2 ETC 2324.6-1P) R-10

SUMMARY OF QUANTITIES

				90% FEDERAL / 10% STATE							
					RETAINING WALL						
				URBAN ROADWAY	016-W977	43rd-31st	MWRD BOX CULVERT	SIGNING	SAFETY	LIGHTING	SURVEILLANCE
CODE NO.	ITEM	UNIT	QUANTITY	J000	Y007	Y007	X028-2A	Y002-1C	SFTY-3N	Y030-1E	Y032-1F
40600300	AGGREGATE (PRIME COAT)	TON	87.8	87.8							
42000521	PORTLAND CEMENT CONCRETE PAVEMENT 11" (JOINTED)	SQ YD	6,214	6,214							
42001165	BRIDGE APPROACH PAVEMENT	SQ YD	430				430				
42001300	PROTECTIVE COAT	SQ YD	137,134	137,134							
42100380	CONTINUOUSLY REINFORCED PORTLAND CEMENT CONCRETE PAVEMENT 14"	SQ YD	83,902	83,902							
44000008	BITUMINOUS SURFACE REMOVAL 2 1/2"	SQ YD	2,371	2,371							
44000009	BITUMINOUS SURFACE REMOVAL 3"	SQ YD	267	267							
44000030	BITUMINOUS SURFACE REMOVAL (VARIABLE DEPTH)	SQ YD	1,664	1,626			38				
44000100	PAVEMENT REMOVAL	SQ YD	114,998	114,998							
44000500	COMBINATION CURB AND GUTTER REMOVAL	FOOT	36,897	36,897							
44000700	APPROACH SLAB REMOVAL	SQ YD	164				164				
44001980	CONCRETE BARRIER REMOVAL	FOOT	419	419							
44003100	MEDIAN REMOVAL	SQ FT	10,297	10,297							
44004250	PAVED SHOULDER REMOVAL	SQ YD	5,297	5,297							
48300600	PORTLAND CEMENT CONCRETE SHOULDERS 11"	SQ YD	616	616							
50100100	REMOVAL OF EXISTING STRUCTURES	EACH	1		1						
50102400	CONCRETE REMOVAL	CU YD	18		18						
* 50200100	STRUCTURE EXCAVATION	CU YD	583		101	168	16			298	
* 50200400	ROCK EXCAVATION FOR STRUCTURES	CU YD	269.4	269.4							
* 50300225	CONCRETE STRUCTURES	CU YD	400.3	29.8	197.7	143.5				29.3	
* 50300255	CONCRETE SUPERSTRUCTURE	CU YD	285.1		88.1	86.6	97.1		10.8	2.5	
50300260	BRIDGE DECK GROOVING	SQ YD	153				153				
* 50300300	PROTECTIVE COAT	SQ YD	1729		686	456	263		34	290	
* 50300510	RUSTICATION FINISH	SQ FT	8403		4352	3507			61	483	
50500505	STUD SHEAR CONNECTORS	EACH	1734		1034	700					
* 50700209	UNTREATED TIMBER LAGGING	SQ FT	6677		3837	2840					
~~50700211~~	~~FURNISHING SOLDIER PILES (HP SECTION)~~	~~FOOT~~	~~874~~			~~874~~					
50700215	FURNISHING SOLDIER PILES (W SECTION)	FOOT	4339		2,150	2189					
* 50800205	REINFORCEMENT BARS, EPOXY COATED	POUND	102,110	5240	41,160	32,360	17,690		1120	4540	
550A0340	STORM SEWERS, CLASS A, TYPE 2 12"	FOOT	8785	8785							
550A0360	STORM SEWERS, CLASS A, TYPE 2 15"	FOOT	558	558							

* DENOTES SPECIALTY ITEMS

Rev. 8-22-06 Rev.

SOQ-2

REVISIONS	
NAME	DATE

ILLINOIS DEPARTMENT OF TRANSPORTATION
F.A.I. 90/94 (DAN RYAN EXPRESSWAY)
GARFIELD BLVD TO 31ST STREET (NB LOCAL LANES)

SUMMARY OF QUANTITIES

SCALE: NONE — DRAWN BY: PHP
DATE: June 9, 2006 — CHECKED BY: RMG

CTE | AECOM

p:\p40459\civil\8-cntrs 18 & 19-31st\cntr 18\general\sq180022a.sht 4:18:31 PM 6/8/2006

F.A.I. RTE.	SECTION	COUNTY	TOTAL SHEETS	SHEET NO.
90/94	*	COOK	565	9
STA.		TO STA.		
FED. ROAD DIST. NO. 1	ILLINOIS	FED. AID PROJECT		

62301 * (2021-922 PT2 ETC 2324.6-1P) R-10

SUMMARY OF QUANTITIES

				90% FEDERAL / 10% STATE							
				URBAN ROADWAY	RETAINING WALL		MWRD BOX CULVERT	SIGNING	SAFETY	LIGHTING	SURVEILLANCE
					016-W977	43rd-31st					
CODE NO.	ITEM	UNIT	QUANTITY	J000	Y007	Y007	X028-2A	Y002-1C	SFTY-3N	Y030-1E	Y032-1F
55100300	STORM SEWER REMOVAL 8"	FOOT	197	197							
55100400	STORM SEWER REMOVAL 10"	FOOT	3,572	3,572							
55100500	STORM SEWER REMOVAL 12"	FOOT	2,752	2,752							
55100700	STORM SEWER REMOVAL 15"	FOOT	912	912							
55100900	STORM SEWER REMOVAL 18"	FOOT	305	305							
55101200	STORM SEWER REMOVAL 24"	FOOT	190	190							
59100100	GEOCOMPOSITE WALL DRAIN	SQ YD	547		311	236					
60107700	PIPE UNDERDRAINS 6"	FOOT	19,866	19,866							
60108000	PIPE UNDERDRAINS 12"	FOOT	1,299	1,299							
60108200	PIPE UNDERDRAINS 6" (SPECIAL)	FOOT	1,050	1,050							
60109580	PIPE UNDERDRAINS FOR STRUCTURES 4"	FOOT	1530		700	830					
60200105	CATCH BASINS, TYPE A, 4'-DIAMETER, TYPE 1 FRAME, OPEN LID	EACH	16	16							
60200805	CATCH BASINS, TYPE A, 4'-DIAMETER, TYPE 8 GRATE	EACH	16	16							
60201310	CATCH BASINS, TYPE A, 4'-DIAMETER, TYPE 20 FRAME AND GRATE	EACH	187	187							
60201340	CATCH BASINS, TYPE A, 4'-DIAMETER, TYPE 24 FRAME AND GRATE	EACH	15	15							
60208210	CATCH BASINS, TYPE C, TYPE 20 FRAME AND GRATE	EACH	5	5							
60208240	CATCH BASINS, TYPE C, TYPE 24 FRAME AND GRATE	EACH	1	1							
60218400	MANHOLES, TYPE A, 4'-DIAMETER, TYPE 1 FRAME, CLOSED LID	EACH	7	7							
60250400	CATCH BASINS TO BE ADJUSTED WITH NEW TYPE 1 FRAME, OPEN LID	EACH	2	2							
60255800	MANHOLES TO BE ADJUSTED WITH NEW TYPE 1 FRAME, CLOSED LID	EACH	25	25							
60258200	MANHOLES TO BE RECONSTRUCTED WITH NEW TYPE 1 FRAME, CLOSED LID	EACH	4	4							
60300105	FRAMES AND GRATES TO BE ADJUSTED	EACH	88	88							
60500040	REMOVING MANHOLES	EACH	10	10							
60500050	REMOVING CATCH BASINS	EACH	114	114							
60500060	REMOVING INLETS	EACH	96	96							
60500105	FILLING MANHOLES	EACH	7	7							
60500205	FILLING CATCH BASINS	EACH	61	61							
60602800	CONCRETE GUTTER, TYPE B	FOOT	3,566	3,566							
60603800	COMBINATION CONCRETE CURB AND GUTTER, TYPE B-6.12	FOOT	1,671	1,671							
60608521	COMBINATION CONCRETE CURB AND GUTTER, TYPE M-2.24	FOOT	1,932	1,932							

* DENOTES SPECIALTY ITEMS

CTE | AECOM

Rev. 8-22-06

Rev.

S00-3

REVISIONS	
NAME	DATE

ILLINOIS DEPARTMENT OF TRANSPORTATION
F.A.I. 90/94 (DAN RYAN EXPRESSWAY)
GARFIELD BLVD TO 31ST STREET (NB LOCAL LANES)

SUMMARY OF QUANTITIES

SCALE: NONE DRAWN BY: PHP
DATE: June 9, 2006 CHECKED BY: RMG

p:\0446590\ctr18\18 ctrl's 18 & 19\sht\ctr 19\general\sq800320a.sht 6/8/2006 4:46:33 PM

F.A.I. RTE.	SECTION	COUNTY	TOTAL SHEETS	SHEET NO.
90/94	*	COOK	565	10
STA.		TO STA.		
FED. ROAD DIST. NO. 1	ILLINOIS	FED. AID PROJECT		

62301 * (2021-922 PT2 ETC 2324.6-1P) R-10

SUMMARY OF QUANTITIES

					90% FEDERAL / 10% STATE								
					URBAN ROADWAY	RETAINING WALL		MWRD BOX CULVERT	SIGNING	SAFETY	LIGHTING	SURVEILLANCE
						016-W977	43rd-31st					
	CODE NO.	ITEM	UNIT	QUANTITY	J000	Y007	Y007	X028-2A	Y002-1C	SFTY-3N	Y030-1E	Y032-1F
	60618324	CONCRETE MEDIAN SURFACE, 6 INCH (SPECIAL)	SQ FT	12,346	12,346							
*	63000000	STEEL PLATE BEAM GUARD RAIL, TYPE A	FOOT	1,012.5	1,012.5							
*	63100045	TRAFFIC BARRIER TERMINAL, TYPE 2	EACH	1	1							
*	63100085	TRAFFIC BARRIER TERMINAL, TYPE 6	EACH	7	7							
*	63100167	TRAFFIC BARRIER TERMINAL, TYPE 1, SPECIAL (TANGENT)	EACH	8	8							
*	~~63100169~~	~~TRAFFIC BARRIER TERMINAL, TYPE 1, SPECIAL (FLARED)~~	~~EACH~~	~~1~~	~~1~~							
	63200310	GUARDRAIL REMOVAL	FOOT	3,104	3,104							
	63700805	CONCRETE BARRIER TRANSITION	FOOT	1,248	1,248							
	64200105	SHOULDER RUMBLE STRIP	FOOT	60,458	60,458							
	66400550	CHAIN LINK FENCE, 4' (SPECIAL)	FOOT	2,042	2,042							
	67100100	MOBILIZATION	L SUM	1	1							
	70101800	TRAFFIC CONTROL AND PROTECTION (SPECIAL)	L SUM	1	1							
	70300240	TEMPORARY PAVEMENT MARKING - LINE 6"	FOOT	20,534	20,534							
	70300510	PAVEMENT MARKING TAPE, TYPE III - LETTERS AND SYMBOLS	SQ FT	436	436							
	70300520	PAVEMENT MARKING TAPE, TYPE III 4"	FOOT	73,218	73,218							
	70300530	PAVEMENT MARKING TAPE, TYPE III 5"	FOOT	14,318	14,318							
	70300550	PAVEMENT MARKING TAPE, TYPE III 8"	FOOT	39,257	39,257							
	70300560	PAVEMENT MARKING TAPE, TYPE III 12"	FOOT	4,167	4,167							
	70301000	WORK ZONE PAVEMENT MARKING REMOVAL	SQ FT	61,076	61,076							
	70400100	TEMPORARY CONCRETE BARRIER	FOOT	9,986	9,986							
	70400200	RELOCATE TEMPORARY CONCRETE BARRIER	FOOT	35,940	35,940							
•	72000100	SIGN PANEL-TYPE 1	SQ FT	134					134			
•	72000200	SIGN PANEL-TYPE 2	SQ FT	224.3					224.3			
•	72000300	SIGN PANEL - TYPE 3	SQ FT	4388					4388			
•	72400200	REMOVE SIGN PANEL ASSEMBLY-TYPE B	EACH	4					4			
•	72400330	REMOVE SIGN PANEL - TYPE 3	SQ FT	928.75					928.75			
*	72400600	RELOCATE SIGN PANEL ASSEMBLY - TYPE B	EACH	2	2							
*	72400730	RELOCATE SIGN PANEL - TYPE 3	SQ FT	3,148	3,148							
•	72700100	STRUCTURAL STEEL SIGN SUPPORT - BREAKAWAY	POUND	922					922			
•	72800100	TELESCOPING STEEL SIGN SUPPORT	FOOT	109.75					109.75			

• DENOTES SPECIALTY ITEMS

Rev. 8-22-06

SOQ-4

CTE | AECOM

REVISIONS	
NAME	DATE

ILLINOIS DEPARTMENT OF TRANSPORTATION
F.A.I. 90/94 (DAN RYAN EXPRESSWAY)
GARFIELD BLVD TO 31ST STREET (NB LOCAL LANES)

SUMMARY OF QUANTITIES

SCALE: NONE DRAWN BY: PHP
DATE: June 9, 2006 CHECKED BY: RMG

p:\p40468\DN\NB cntrs 18 & 19\sdf\cntr 18\general\soq\60042ca.dgn 6/8/2006 4:16:34 PM

F.A.I. RTE.	SECTION	COUNTY	TOTAL SHEETS	SHEET NO.
90/94	*	COOK	565	11
STA.		TO STA.		
FED. ROAD DIST. NO. 1	ILLINOIS	FED. AID PROJECT		

62301 * (2021-922 PT2 ETC 2324.6-1P) R-10

SUMMARY OF QUANTITIES

					90% FEDERAL / 10% STATE							
					URBAN ROADWAY	RETAINING WALL		MWRD BOX CULVERT	SIGNING	SAFETY	LIGHTING	SURVEILLANCE
						016-W977	43rd-31st					
	CODE NO.	ITEM	UNIT	QUANTITY	J000	Y007	Y007	X028-2A	Y002-1C	SFTY-3N	Y030-1E	Y032-1F
*	72900200	METAL POST - TYPE B	FOOT	128					128			
*	73000100	WOOD SIGN SUPPORT	FOOT	762	32				730			
*	73000105	WOOD SIGN SUPPORT, SPECIAL	FOOT	34								34
*	73100100	BASE FOR TELESCOPING STEEL SIGN SUPPORT	EACH	11					11			
*	73300100	OVERHEAD SIGN STRUCTURE - SPAN, TYPE I-A (4'-0" X 4'-6")	FOOT	298					298			
*	73300200	OVERHEAD SIGN STRUCTURE - SPAN, TYPE II-A (4'-6" X 5'-3")	FOOT	172.1					172.1			
*	73300300	OVERHEAD SIGN STRUCTURE - SPAN, TYPE III-A (5'-0" X 7'-0")	FOOT	70					70			
*	73304000	OVERHEAD SIGN STRUCTURE - BRIDGE MOUNTED	FOOT	161.5					161.5			
*	73305000	OVERHEAD SIGN STRUCTURE WALKWAY	FOOT	365.3					365.3			
*	73400100	CONCRETE FOUNDATIONS	CU YD	2.1					2.1			
*	73400200	DRILLED SHAFT CONCRETE FOUNDATIONS	CU YD	95.6					95.6			
*	73600100	REMOVE OVERHEAD SIGN STRUCTURE - SPAN	EACH	1					1			
*	73602000	REMOVE OVERHEAD SIGN STRUCTURE - BRIDGE MOUNTED	EACH	3					3			
*	73700100	REMOVE GROUND-MOUNTED SIGN SUPPORT	EACH	20					20			
*	73700200	REMOVE CONCRETE FOUNDATION - GROUND MOUNT	EACH	20					20			
*	73700300	REMOVE CONCRETE FOUNDATION - OVERHEAD	EACH	6					6			
*	78008200	POLYUREA PAVEMENT MARKING TYPE I - LETTERS & SYMBOLS	SQ FT	236.6	236.6							
*	78008210	POLYUREA PAVEMENT MARKING TYPE I - LINE 4"	FOOT	60,477	60,477							
*	78008220	POLYUREA PAVEMENT MARKING TYPE I - LINE 5"	FOOT	19,738	19,738							
*	78008240	POLYUREA PAVEMENT MARKING TYPE I - LINE 8"	FOOT	30,972	30,972							
*	78008250	POLYUREA PAVEMENT MARKING TYPE I - LINE 12"	FOOT	6,126	6,126							
*	78008270	POLYUREA PAVEMENT MARKING TYPE I - LINE 24"	FOOT	75	75							
*	78100100	RAISED REFLECTIVE PAVEMENT MARKER	EACH	2,377	2,377							
*	78100105	RAISED REFLECTIVE PAVEMENT MARKER (BRIDGE)	EACH	4	4							
*	78200100	MONODIRECTIONAL PRISMATIC BARRIER REFLECTOR	EACH	1,585	1,585							
*	78200410	GUARDRAIL MARKERS, TYPE A	EACH	23	23							
*	78200530	BARRIER WALL MARKERS, TYPE C	EACH	282	282							
*	78201000	TERMINAL MARKER, DIRECT APPLIED	EACH	8	8							
	78300100	PAVEMENT MARKING REMOVAL	SQ FT	32,125	32,125							
*	80700140	GROUND ROD, 5/8" DIA. X 10 FT.	EACH	8							8	

* DENOTES SPECIALTY ITEMS

CTE | AECOM

Rev. 8-22-06

S00-5

REVISIONS	
NAME	DATE

ILLINOIS DEPARTMENT OF TRANSPORTATION
F.A.I. 90/94 (DAN RYAN EXPRESSWAY)
GARFIELD BLVD TO 31ST STREET (NB LOCAL LANES)

SUMMARY OF QUANTITIES

SCALE: NONE | DRAWN BY: PHP
DATE: June 9, 2006 | CHECKED BY: RMG

5/8/2006 4:18:35 PM

P:\PROJECTS\CONTRACTS 18 & 19\STRUCTR 19\general\sc0900572.dgn

F.A.I. RTE.	SECTION	COUNTY	TOTAL SHEETS	SHEET NO.
90/94	*	COOK	565	12
STA.		TO STA.		
FED. ROAD DIST. NO. 1	ILLINOIS	FED. AID PROJECT		
62301	* (2021-922 PT2 ETC 2324.6-1P) R-10			

SUMMARY OF QUANTITIES

					90% FEDERAL / 10% STATE							
					URBAN ROADWAY	RETAINING WALL		MWRD BOX CULVERT	SIGNING	SAFETY	LIGHTING	SURVEILLANCE
						016-W977	43rd-31st					
	CODE NO.	ITEM	UNIT	QUANTITY	J000	Y007	Y007	X028-2A	Y002-1C	SFTY-3N	Y030-1E	Y032-1F
*	81000600	CONDUIT IN TRENCH, 2" DIA., GALVANIZED STEEL	FOOT	3,026								3,026
*	81000800	CONDUIT IN TRENCH, 3" DIA., GALVANIZED STEEL	FOOT	301							51	250
*	81016700	CONDUIT IN TRENCH, 2 1/2" DIA., HIGH DENSITY POLYETHYLENE, COILABLE	FOOT	38								38
*	81016800	CONDUIT IN TRENCH, 3" DIA., HIGH DENSITY POLYETHYLENE, COILABLE	FOOT	75								75
*	81017000	CONDUIT IN TRENCH, 4" DIA., HIGH DENSITY POLYETHYLENE, COILABLE	FOOT	8								8
*	81023750	CONDUIT ENCASED, CONCRETE, 3" DIA., PVC	FOOT	472	327							145
*	81200270	CONDUIT EMBEDDED IN STRUCTURE, 4" DIA. PVC	FOOT	510							510	
*	81302630	JUNCTION BOX, NON METALLIC, EMBEDDED IN STRUCTURE, 21"X11"X8"	EACH	1							1	
*	81400200	HEAVY-DUTY HANDHOLE	EACH	11								11
*	81400205	HEAVY-DUTY HANDHOLE (SPECIAL)	EACH	6								6
*	81500200	TRENCH AND BACKFILL FOR ELECTRICAL WORK	FOOT	4,127							206	3,921
*	82106300	LUMINAIRE, SODIUM VAPOR, HORIZONTAL MOUNT, 310 WATT (INSTALL ONLY)	EACH	6							6	
*	83050870	LIGHT POLE, ALUMINUM, 47.5 FT. M.H., 2-6 FT. MAST ARMS, INSTALL ONLY	EACH	3							3	
*	83700250	LIGHT TOWER FOUNDATION, 44" DIAMETER	FOOT	21	21						21	
*	87800100	CONCRETE FOUNDATION, TYPE A	FOOT	12								12
*	87900200	DRILL EXISTING HANDHOLE	EACH	1								1
*	89502385	REMOVE EXISTING CONCRETE FOUNDATION	EACH	6								6
*	E20200G1	VINE-PARTHENOCISSUS QUINQUEFOLIA (VIRGINIA CREEPER), 1-GALLON POT	EACH	931	931							
*	E20220G1	VINE-PARTHENOCISSUS TRICUSPIDATA (BOSTON IVY), 1-GALLON POT	EACH	201	201							
*	K0030400	PERENNIAL PLANTS, DAYLILIES	UNIT	8.36	8.36							
	X0320333	ROADWAY CLEANING (SPECIAL)	EACH	19	19							
	X0321720	WATER MAIN REMOVAL	FOOT	1,075	1,075							
	X0321905	STORM SEWERS, TYPE 1, WATERMAIN QUALITY PIPE, 12"	FOOT	49	49							
	X0322256	TEMPORARY INFORMATION SIGNING	SQ FT	2,143	2,143							
	X0322400	PILE EXTRACTION	EACH	20		20						
	X0322859	WEED CONTROL, PRE-EMERGENT GRANULAR HERBICIDE	POUND	16.0	16.0							
	X0323221	PLUG AND ABANDON EXISTING PIPE	CU YD	8	8							
*	X0323360	WOODEN POLE REMOVAL	EACH	2							2	
	X0323426	SEDIMENT CONTROL, DRAINAGE STRUCTURE INLET FILTER CLEANING	EACH	830	830							
*	X0323907	COMMUNICATIONS VAULT	EACH	4								4

* DENOTES SPECIALTY ITEMS

CTE | AECOM

Rev. 8-22-06

S00-6

REVISIONS	
NAME	DATE

ILLINOIS DEPARTMENT OF TRANSPORTATION
F.A.I. 90/94 (DAN RYAN EXPRESSWAY)
GARFIELD BLVD TO 31ST STREET (NB LOCAL LANES)

SUMMARY OF QUANTITIES

SCALE: NONE — DRAWN BY: PHP
DATE: June 9, 2006 — CHECKED BY: RMG

D:\446468\CNTR\contrs 18 & 19\sht\contr 18\general\sg00c02a.sht 6/8/2006 4:18:36 PM

F.A.I. RTE.	SECTION	COUNTY	TOTAL SHEETS	SHEET NO.
90/94	*	COOK	565	13
STA.		TO STA.		
FED. ROAD DIST. NO. 1	ILLINOIS	FED. AID PROJECT		

62301 * (2021-922 PT2 ETC 2324.6-1P) R-10

p:\p40468\civil\18-cntrs 18 & 19\sht\cntr 18\general\sq1800\26ls1t

SUMMARY OF QUANTITIES

				90% FEDERAL / 10% STATE							
				URBAN ROADWAY	RETAINING WALL		MWRD BOX CULVERT	SIGNING	SAFETY	LIGHTING	SURVEILLANCE
					016-W977	43rd-31st					
CODE NO.	ITEM	UNIT	QUANTITY	J000	Y007	Y007	X028-2A	Y002-1C	SFTY-3N	Y030-1E	Y032-1F
X0323973	SEDIMENT CONTROL, SILT FENCE	FOOT	14,846	14,846							
X0323974	SEDIMENT CONTROL, SILT FENCE MAINTENANCE	FOOT	3,714	3,714							
X0323988	TEMPORARY SOIL RETENTION SYSTEM	SQ FT	8978	8,173	805						
X0324112	BARRIER BASE	FOOT	17,958	17,958							
* X0324433	LIGHT TOWER SERVICE PAD, 6"	SQ FT	816							816	
* X0324455	DRILLLING AND SETTING SOLDIER PILES (IN SOIL)	CU FT	21,324		12,579	8745					
* X0324469	CONDUIT ENCASED, REINFORCED CONCRETE, 2-4" DIA., CNC	FOOT	100								100
* X0324470	CONDUIT ENCASED, REINFORCED CONCRETE, 3-4" DIA., CNC	FOOT	480								480
* X0324471	CONDUIT ENCASED, REINFORCED CONCRETE, 4-4" DIA., CNC	FOOT	36								36
* X0324472	CONDUIT ENCASED, REINFORCED CONCRETE, 5-4" DIA., CNC	FOOT	116								116
X0324640	FLUTED KNEE WALL	FOOT	218			218					
* X0324646	CONDUIT ENCASED, REINFORCED CONCRETE, 6-4" DIA., CNC	FOOT	270								270
X0324697	SOIL STABILIZERS	POUND	1,669,253	1,669,253							
X0324698	APPLYING DUST SUPPRESSION AGENT	UNIT	1,331	1,331							
* X0324793	LIGHT TOWER SERVICE PAD, SPECIAL	SQ FT	1,496							1,496	
X0325080	VIDEO TAPING OF MWRD CULVERT	FOOT	245				245				
X0325081	CONCRETE SLAB HYDRO-DEMOLITION	SQ YD	165				165				
X0919000	TEMPORARY PAVEMENT REMOVAL	SQ YD	11,728	11,728							
X2020300	EXCAVATE AND PLACE EXISTING GRANULAR MATERIAL	CU YD	27,469	27,469							
X2500322	SEEDING, CLASS 5A (MODIFIED)	ACRE	2.84	2.84							
X4066426	BITUMINOUS CONCRETE SURFACE COURSE, SUPERPAVE, MIX "D", N70	TON	392	392							
X4067100	POLYMERIZED LEVELING BINDER (MACHINE METHOD), SUPERPAVE, IL-4.75, N50	TON	262	262							
X4210400	LUG SYSTEM REMOVAL	EACH	4	4							
X4834090	PORTLAND CEMENT CONCRETE SHOULDERS 14"	SQ YD	24,255	24,255							
X6061003	COMBINATION CONCRETE CURB AND GUTTER, TYPE M-4.48 (MODIFIED)	FOOT	4,450	4,450							
X6063600	COMBINATION CONCRETE CURB AND GUTTER, TYPE M-4.24	FOOT	9,236	9,236							
X6065740	CONCRETE MEDIAN SURFACE, 5" (MODIFIED)	SQ FT	4,168	4,168							
X6370910	CONCRETE BARRIER, SINGLE FACE, 32" HEIGHT	FOOT	3,801	3,801							
X6370930	CONCRETE BARRIER, DOUBLE FACE, 32" HEIGHT	FOOT	12,386	12,386							
X6370935	CONCRETE BARRIER, SINGLE FACE, 32" (MODIFIED)	FOOT	624	624							

* DENOTES SPECIALTY ITEMS

REVISIONS	
NAME	DATE

ILLINOIS DEPARTMENT OF TRANSPORTATION
F.A.I. 90/94 (DAN RYAN EXPRESSWAY)
GARFIELD BLVD TO 31ST STREET (NB LOCAL LANES)

SUMMARY OF QUANTITIES

SCALE: NONE DRAWN BY: PHP
DATE: June 9, 2006 CHECKED BY: RWG

6/8/2006 4:18:35 PM

CTE | AECOM

Rev. 8-22-06 Rev. SQQ-7

F.A.I. RTE.	SECTION	COUNTY	TOTAL SHEETS	SHEET NO.
90/94	*	COOK	565	14
STA.		TO STA.		
FED. ROAD DIST. NO. 1	ILLINOIS	FED. AID PROJECT		
62301	* (2021-922 PT2 ETC 2324.6-1P) R-10			

SUMMARY OF QUANTITIES

				90% FEDERAL / 10% STATE							
				URBAN ROADWAY	RETAINING WALL		MWRD BOX CULVERT	SIGNING	SAFETY	LIGHTING	SURVEILLANCE
					016-W977	43rd-31st					
CODE NO.	ITEM	UNIT	QUANTITY	J000	Y007	Y007	X028-2A	Y002-1C	SFTY-3N	Y030-1E	Y032-1F
X6640050	CHAIN LINK FENCE, 42" ATTACHED TO STRUCTURE (SPECIAL)	FOOT	1181	△1	470	519				192	△1
X6640500	CHAIN LINK GATE ASSEMBLY (SPECIAL)	EACH	2	△1	1					1	△1
X6700410	ENGINEER'S FIELD OFFICE, TYPE A (SPECIAL)	CAL MO	12	12							
X6700600	ENGINEER'S FIELD LABORATORY (SPECIAL)	CAL MO	12	12							
X7011008	TRAFFIC CONTROL AND PROTECTION FOR ALTERNATE ROUTE SIGNING	CAL MO	12	12							
X7011015	TRAFFIC CONTROL AND PROTECTION (EXPRESSWAYS)	L SUM	1	1							
X7013820	TRAFFIC CONTROL SURVEILLANCE, EXPRESSWAYS	CAL DA	330	330							
X7015000	CHANGEABLE MESSAGE SIGN	CAL MO	128	128							
• X8100045	CONDUIT ENCASED, REINFORCED CONCRETE, 1-3" DIA., CNC	FOOT	60							60	
• X8160380	UNIT DUCT, WITH 3-1/C NO. 2 AND 1/C NO. 4 GROUND, 600V (EPR-TYPE RHW), 1 1/4" DIA., POLYETHELYNE	FOOT	575							575	
• X8360105	LIGHT POLE FOUNDATION, INTEGRAL WITH BARRIER WALL, 24" DIAMETER	FOOT	43							43	
△1 X0325567	STABILIZED SUB-BASE 4 1/2"	SQ YD	125,226	125,226							
• XX002957	REMOVE AND RE-ERECT EXISTING SIGN	EACH	13					13			
XX003988	TEMPORARY CONCRETE BARRIER REMOVAL	FOOT	14,466	14,466							
• XX004046	AERIAL CABLE REMOVAL	FOOT	670							670	
XX004201	PAVEMENT REINFORCEMENT 14"	SQ YD	83,902	83,902 △1							
Z0002600	BAR SPLICERS	EACH	110				110				
* Z0008244	DRILLED SHAFT IN SOIL 44"	FOOT	67 △1		32					35 △1	
Z0013798	CONSTRUCTION LAYOUT	L SUM	1	1							
△ Z0018500	DRAINAGE STRUCTURES TO BE CLEANED	EACH	14	14							
• Z0029999	IMPACT ATTENUATOR REMOVAL	EACH	3						3		
• Z0030070	IMPACT ATTENUATOR (SEVERE USE, NARROW), TEST LEVEL 3	EACH	7						7		
• Z0030140	IMPACT ATTENUATORS (NON-REDIRECTIVE), TEST LEVEL 2	EACH	1						1		
• Z0030250	IMPACT ATTENUATORS, TEMPORARY (NON-REDIRECTIVE), TEST LEVEL 3	EACH	13						13		
• Z0030280	IMPACT ATTENUATORS, TEMPORARY (SEVERE USE,NARROW), TEST LEVEL 3	EACH	3						3		
• Z0030350	IMPACT ATTENUATORS, RELOCATE (NON-REDIRECTIVE), TEST LEVEL 3	EACH	7						7		
Z0040530	PIPE UNDERDRAIN REMOVAL	FOOT	7,827	7,827							
Z0048665	RAILROAD PROTECTIVE LIABILITY INSURANCE	L SUM	1	1							
⊙ Z0076600	TRAINEES	HOUR	2000	2000 △1							
△ X0325504	CLEANING PIPE UNDERDRAINS	FOOT	4,230	4,230							

△ NON-PARTICIPATING
⊙ Y080

• DENOTES SPECIALTY ITEMS

CTE | AECOM

△1 Rev. 8-22-06

Rev.

S00-8

REVISIONS	
NAME	DATE

ILLINOIS DEPARTMENT OF TRANSPORTATION
F.A.I. 90/94 (DAN RYAN EXPRESSWAY)
GARFIELD BLVD TO 31ST STREET (NB LOCAL LANES)

SUMMARY OF QUANTITIES

SCALE: NONE | DRAWN BY: PHP
DATE: June 9, 2006 | CHECKED BY: RMG

p:\p40468\dwn\18-cntrs 18 & 19\sht\cntr 18\general\sgn8002a.dgn
6/8/2006 4:18:37 PM

F.A.I. RTE.	SECTION	COUNTY	TOTAL SHEETS	SHEET NO.
90/94	*	COOK	565	15
STA.		TO STA.		
FED. ROAD DIST. NO. 1	ILLINOIS	FED. AID PROJECT		

62301 * (2021-922 PT2 ETC 2324.6-1P) R-10

SUMMARY OF QUANTITIES

					90% FEDERAL / 10% STATE							
					URBAN ROADWAY	RETAINING WALL		MWRD BOX CULVERT	SIGNING	SAFETY	LIGHTING	SURVEILLANCE
						016-W977	43rd-31st					
	CODE NO.	ITEM	UNIT	QUANTITY	J000	Y007	Y007	X028-2A	Y002-1C	SFTY-3N	Y030-1E	Y032-1F
*	X0325505	CONDUIT ENCASED, REINFORCED CONCRETE, 1-2" DIA., CNC	FOOT	67								67
*	X0325506	CONDUIT ENCASED, REINFORCED CONCRETE, 2-2" DIA., CNC	FOOT	115								115
	X0325314	LUG SYSTEM COMPLETE 38'	EACH	2	2							
	X0325507	LUG SYSTEM COMPLETE 59'	EACH	1	1							
1	X0325502	MEDIAN BARRIER GATE SYSTEM	EACH	2	2							
	X0325085	TEMPORARY PAVEMENT (INTERSTATE)	SQ YD	3,162	3,162							
	X0325526	TEMPORARY PAVEMENT (VARIABLE DEPTH)	TON	509	509							
	X0325510	VIDEO TAPING OF PIPE UNDERDRAINS	FOOT	8,456	8,456							
*	X0325511	CONDUIT ENCASED, REINFORCED CONCRETE, SPECIAL, 5-4" DIA., CNC	FOOT	110							30	80
	X0325512	DRAINAGE STRUCTURES TO BE ADJUSTED, SPECIAL	EACH	12	12							
	X0325498	DUCTILE IRON PIPE	FOOT	200	200							
	X0325513	PIPE UNDERDRAIN REMOVAL, SPECIAL	FOOT	866	866							
1	81016600	CONDUIT IN TRENCH, 2" DIA., HIGH DENSITY POLYETHYLENE, COILABLE	FOOT	168							168	
	66900200	NON-SPECIAL WASTE DISPOSAL	CU. YD.	15,000	15,000							
1	66900450	SPECIAL WASTE PLANS AND REPORTS	L. SUM	1	1							
	66900530	SOIL DISPOSAL ANALYSIS	EACH	2	2							

* DENOTES SPECIALTY ITEMS

CTE | AECOM

1 Rev. 8-22-06 Rev.

S00-9

REVISIONS	
NAME	DATE

ILLINOIS DEPARTMENT OF TRANSPORTATION
F.A.I. 90/94 (DAN RYAN EXPRESSWAY)
GARFIELD BLVD TO 31ST STREET (NB LOCAL LANES)

SUMMARY OF QUANTITIES

SCALE: NONE DRAWN BY: PHP
DATE: June 9, 2006 CHECKED BY: RMG

6/8/2006 4:16:38 PM

P:\P4946ROW\B-parts 18 & 19\Sheets\ 19general\Sq\R0092Qs.sht

F.A.I. RTE.	SECTION	COUNTY	TOTAL SHEETS	SHEET NO.
90/94	•	COOK	565	20
STA.		TO STA.		
FED. ROAD DIST. NO. 1	ILLINOIS	FED. AID PROJECT		

62301 • (2021-922 PT2 ETC 2324.6-1P) R-10

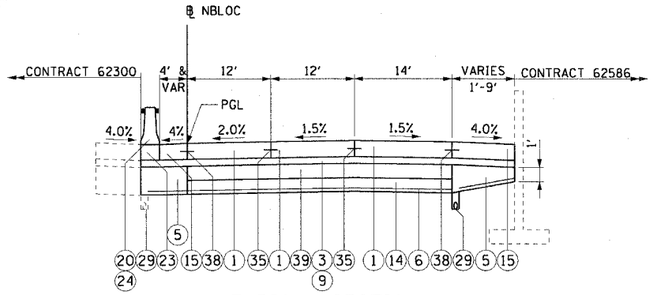

1 TYPICAL SECTION
NB LOCAL LANES

STA 4474+50.00 TO STA 4476+70.62
STA 4479+82.88 TO STA 4487+49.16

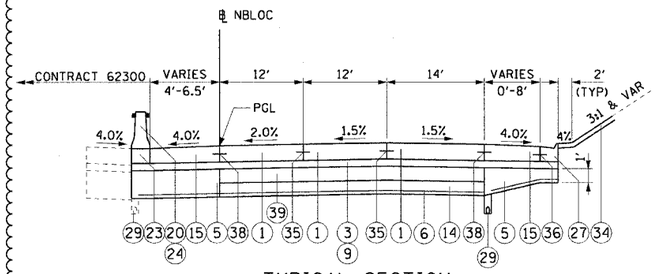

2 TYPICAL SECTION
NB LOCAL LANES

STA 4476+70.62 TO STA 4479+82.88
STA 4498+48.67 TO STA 4500+98.17
STA 4502+70.87 TO STA 4505+54.04
STA 4514+05.49 TO STA 4516+33.26

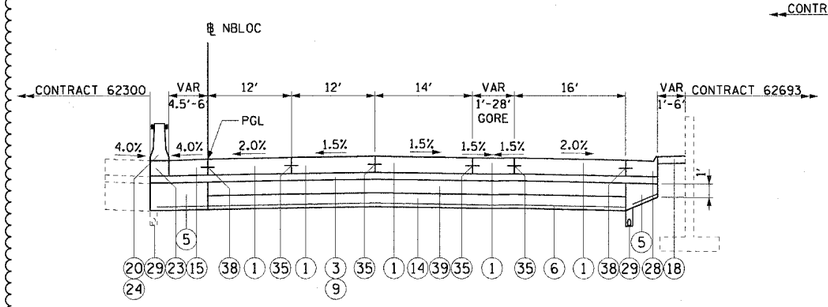

3 TYPICAL SECTION
NB LOCAL LANES

STA 4487+49.16 TO STA 4489+98.51
STA 4508+72.54 TO STA 4514+05.49

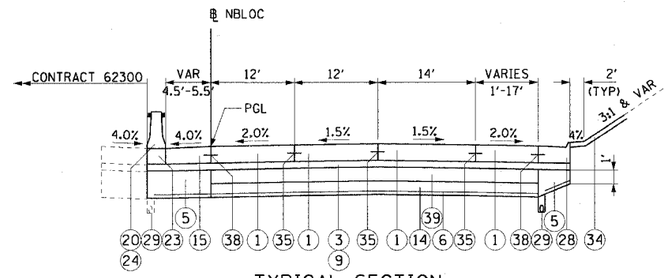

4 TYPICAL SECTION
NB LOCAL LANES

STA 4489+98.51 TO STA 4498+48.67
STA 4505+54.04 TO STA 4508+72.54

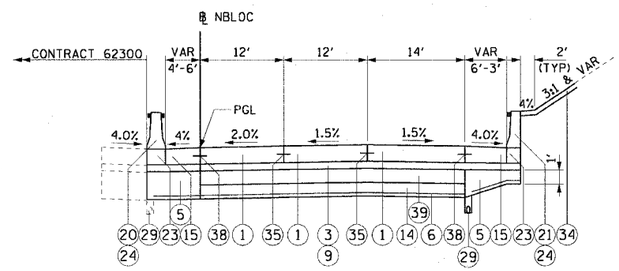

5 TYPICAL SECTION
NB LOCAL LANES

STA 4500+98.17 TO STA 4502+70.87

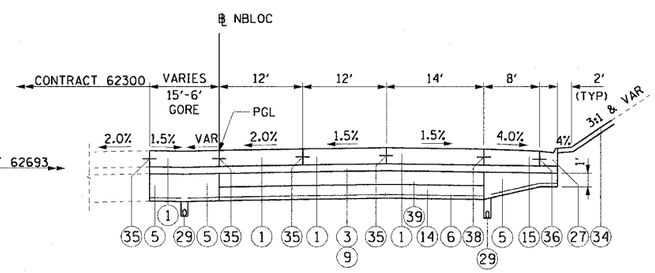

6 TYPICAL SECTION
NB LOCAL LANES

STA 4516+33.26 TO STA 4520+63.93

STRUCTURAL PAVEMENT DESIGN FOR MAINLINE

STRUCTURAL DESIGN TRAFFIC: YEAR 2020
PV= 125,272 SU= 10,930 MU= 31,949
ROAD/STREET CLASSIFICATION: CLASS 1
PV= 8% SU= 37% MU= 37%
TRAFFIC FACTOR: ACTUAL TF= 264.46 AC TYPE= N/A
MINIMUM TF= 12.39
AC GRADE: BINDER= - SURFACE= -
SUBGRADE SUPPORT RATING:
SSR= 2.00 (STA. to STA.)
SSR= 2.00 (STA. to STA.)

1

BITUMINOUS MIXTURE REQUIREMENT

ITEM	AC TYPE	VOIDS	RAP %
~~BITUMINOUS STABILIZED SUB-BASE, 4"~~	~~PG 58-22~~	~~2% @ 30 Gyr~~	~~50~~
BITUMINOUS STABILIZED SUB-BASE, 4½"	PG 58-22	3% @ 50 Gyr	40
BITUMINOUS CONCRETE SURFACE COURSE, SUPERPAVE, MIX "D", N70	PG 64-22	4% @ 70 Gyr	10
POLYMERIZED LEVELING BINDER (MACHINE METHOD), SUPERPAVE, IL-4.75, N50	SBS/SBR PG 76-22	2.5% @ 50 Gyr	15
TEMPORARY PAVEMENT (INTERSTATE)			
POLYMERIZED BIT. CONC. BINDER COURSE, SUPERPAVE, IL-19.0, N105, 14"	SBS PG 76-22	4% @ 105 Gyr	10

THE UNIT WEIGHT USED TO CALCULATE ALL BITUMINOUS SURFACE MIXTURES IS 112 LBS/SQYD/IN

PROPOSED LEGEND:

1 CONTINUOUSLY REINFORCED PORTLAND CEMENT CONCRETE PAVEMENT 14" AND PAVEMENT REINFORCEMENT 14"
1 3 BITUMINOUS STABILIZED SUB-BASE, 4½"
5 SUB-BASE GRANULAR MATERIAL, TYPE B 24"
6 GEOTECHNICAL FABRIC FOR GROUND STABILIZATION
9 BITUMINOUS MATERIALS (PRIME COAT)
1 14 EXCAVATE AND PLACE EXISTING GRANULAR MATERIAL
1 15 PORTLAND CEMENT CONCRETE SHOULDERS 14" & VARIES
18 CONCRETE MEDIAN SURFACE, 6" (SPECIAL)
20 CONCRETE BARRIER, DOUBLE FACE, 32" HEIGHT
21 CONCRETE BARRIER, SINGLE FACE, 32" HEIGHT
23 BARRIER BASE
24 BARRIER WALL MARKERS, TYPE C (80' C-C)
26 COMBINATION CONCRETE CURB AND GUTTER, TYPE M-2.24
27 COMBINATION CONCRETE CURB AND GUTTER, TYPE M-4.24
28 COMBINATION CONCRETE CURB AND GUTTER, TYPE M-4.48 (MODIFIED)
29 PIPE UNDERDRAINS 6"
33 GUARDRAIL
34 TOPSOIL FURNISH AND PLACE / SEEDING (SEE LANDSCAPING PLANS FOR DETAILS)
35 LONGITUDINAL SAWED OR CONSTRUCTION JOINT.
FOR LONGITUDINAL SAWED JOINT, POUR IN PLACE NO. 6 DEFORMED EPOXY TIE BARS 30" LONG AT 30" C-C. FOR LONGITUDINAL CONSTRUCTION JOINT, DRILL AND GROUT NO. 8 DEFORMED EPOXY TIE BARS 24" LONG AT 24" C-C.
(SHALL BE INCLUDED IN THE COST OF CONTINUOUSLY REINFORCED PCC PAVEMENT 14")
36 LONGITUDINAL CONSTRUCTION JOINT,
DRILL AND GROUT NO. 6 DEFORMED EPOXY TIE BARS 24" LONG AT 24" C-C.
(SHALL BE INCLUDED IN THE COST OF THE APPLICABLE COMB CONC CURB AND GUTTER TYPE)
38 LONGITUDINAL CONSTRUCTION JOINT,
DRILL AND GROUT NO. 8 DEFORMED EPOXY TIE BARS 30" LONG AT 24" C-C.
(SHALL BE INCLUDED IN THE COST OF THE APPLICABLE PCC SHOULDER TYPE)
1 39 SUB-BASE GRANULAR MATERIAL, TYPE B 12"

PRTYP-1

NOTES:

1. SEE ROADWAY DETAILS FOR VARIABLE HEIGHT OF THE DOUBLE FACE BARRIER WALL AND FOR THE TYING OF THE BARRIER BASE TO THE PCC SHOULDER AND FOR THE LIMITS OF CONSTRUCTION OF THE SUB-BASE GRANULAR MATERIAL UNDER THE DOUBLE FACE BARRIER WALL.
2. SHOULDER RUMBLE STRIPS SHALL BE CONSTRUCTED IN THE PROPOSED AND EXISTING SHOULDERS OF THE LOCAL AND EXPRESS LANES ACCORDING TO IDOT STANDARD 642001.
3. TYPICAL SECTIONS NEED TO BE VERIFIED WITH THE ROADWAY PLANS AS THEY ARE A REPRESENTATION OF THE PLANS. THEY DO NOT SHOW ALL CONFIGURATIONS, JUST THE MOST PREDOMINANT.

1 NOTES CONT:

4. THE SLOPE OF THE STABILIZED SUB-BASE 4 ½" UNDER THE SHOULDERS AND CURB & GUTTER SHALL MATCH THE SLOPE OF THE ADJACENT PAVEMENT IN THE NORMAL CROWNED AREAS.

CTE | AECOM

REVISIONS	
NAME	DATE
1 ADDENDUM 1	7/27/06

ILLINOIS DEPARTMENT OF TRANSPORTATION
F.A.I. 90/94 (DAN RYAN EXPRESSWAY)
GARFIELD BLVD TO 31ST STREET (NB LOCAL LANES)

PROPOSED TYPICAL SECTIONS
NORTHBOUND LOCAL LANES

SCALE: H:1"=10' V:1"=5' DRAWN BY: NJH
DATE: June 9, 2006 CHECKED BY: RMG

P:\P40468\CNT\VB-Cntrs 18 & 19\Str\Cntr 19\Typical Sections\TYSEC180022A.str
7/28/2006 11:14:07 AM

F.A.I. RTE.	SECTION	COUNTY	TOTAL SHEETS	SHEET NO.
90/94	*	COOK	565	21
STA.		TO STA.		
FED. ROAD DIST. NO. 1	ILLINOIS	FED. AID PROJECT		

62301 * (2021-922 PT2 ETC 2324.6-1P) R-10

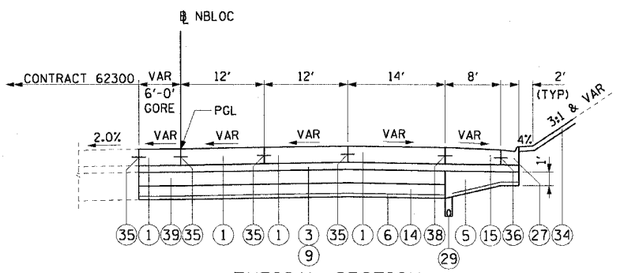

1 TYPICAL SECTION
NB LOCAL LANES

STA 4520+63.93 TO STA 4522+81.63

SUPERELEVATION TRANSITION: STA 4521+13.42 TO STA 4524+55.42

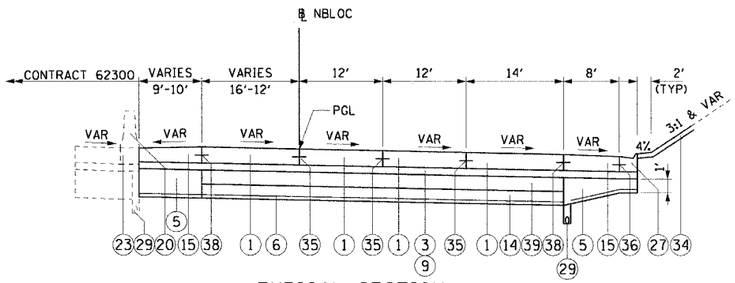

2 TYPICAL SECTION
NB LOCAL LANES

STA 4522+81.63 TO STA 4524+55.42

SUPERELEVATION TRANSITION: STA 4521+13.42 TO STA 4524+55.42

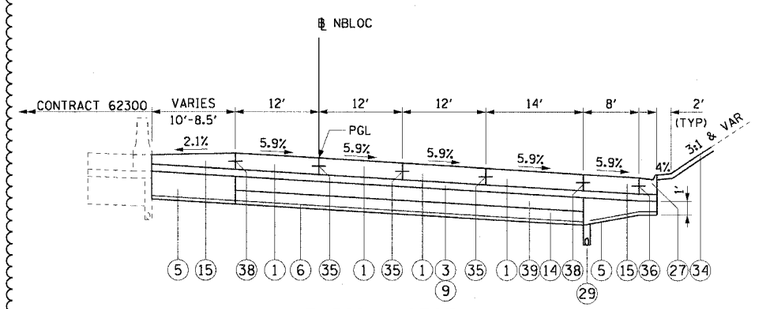

3 TYPICAL SECTION
NB LOCAL LANES

STA 4524+55.42 TO STA 4529+00.00

FULL SUPERELEVATION: STA 4524+55.42 TO STA 4531+19.88 (5.9% RT)

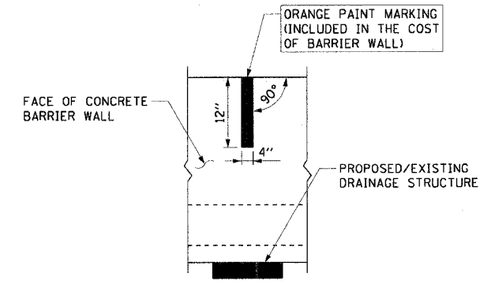

CONCRETE BARRIER WALL
MARKING AT DRAINAGE STRUCTURE

PLACE ON BARRIER WALL CONSTRUCTED ADJACENT TO ALL PROPOSED AND/OR EXISTING DRAINAGE STRUCTURES

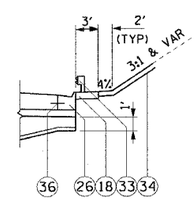

STA 4526+44.67 TO STA 4527+91.71

STRUCTURAL PAVEMENT DESIGN FOR MAINLINE

STRUCTURAL DESIGN TRAFFIC: YEAR 2020
PV= 125,272 SU= 10,930 MU= 31,949
ROAD/STREET CLASSIFICATION: CLASS 1
PV= 8% SU= 37% MU= 37%
TRAFFIC FACTOR: ACTUAL TF= 264.46 AC TYPE= N/A
MINIMUM TF= 12.39
AC GRADE: BINDER= - SURFACE= -
SUBGRADE SUPPORT RATING:
SSR= 2.00 (STA. to STA.)
SSR= 2.00 (STA. to STA.)

PROPOSED LEGEND:

1. CONTINUOUSLY REINFORCED PORTLAND CEMENT CONCRETE PAVEMENT 14" AND PAVEMENT REINFORCEMENT 14"
3. BITUMINOUS STABILIZED SUB-BASE, 4½"
5. SUB-BASE GRANULAR MATERIAL, TYPE B 24"
6. GEOTECHNICAL FABRIC FOR GROUND STABILIZATION
9. BITUMINOUS MATERIALS (PRIME COAT)
14. EXCAVATE AND PLACE EXISTING GRANULAR MATERIAL
15. PORTLAND CEMENT CONCRETE SHOULDERS 14" & VARIES
18. CONCRETE MEDIAN SURFACE, 6" (SPECIAL)
20. CONCRETE BARRIER, DOUBLE FACE, 32" HEIGHT
21. CONCRETE BARRIER, SINGLE FACE, 32" HEIGHT
23. BARRIER BASE
24. BARRIER WALL MARKERS, TYPE C (80' C-C)
26. COMBINATION CONCRETE CURB AND GUTTER, TYPE M-2.24
27. COMBINATION CONCRETE CURB AND GUTTER, TYPE M-4.24
28. COMBINATION CONCRETE CURB AND GUTTER, TYPE M-4.48 (MODIFIED)
29. PIPE UNDERDRAINS 6"
33. GUARDRAIL
34. TOPSOIL FURNISH AND PLACE / SEEDING (SEE LANDSCAPING PLANS FOR DETAILS)
35. LONGITUDINAL SAWED OR CONSTRUCTION JOINT. FOR LONGITUDINAL SAWED JOINT, POUR IN PLACE NO. 6 DEFORMED EPOXY TIE BARS 30" LONG AT 30" C-C. FOR LONGITUDINAL CONSTRUCTION JOINT, DRILL AND GROUT NO. 8 DEFORMED EPOXY TIE BARS 24" LONG AT 24" C-C. (SHALL BE INCLUDED IN THE COST OF CONTINUOUSLY REINFORCED PCC PAVEMENT 14")
36. LONGITUDINAL CONSTRUCTION JOINT. DRILL AND GROUT NO. 6 DEFORMED EPOXY TIE BARS 24" LONG AT 24" C-C. (SHALL BE INCLUDED IN THE COST OF THE APPLICABLE COMB CONC CURB AND GUTTER TYPE)
38. LONGITUDINAL CONSTRUCTION JOINT. DRILL AND GROUT NO. 8 DEFORMED EPOXY TIE BARS 30" LONG AT 24" C-C. (SHALL BE INCLUDED IN THE COST OF THE APPLICABLE PCC SHOULDER TYPE)
39. SUB-BASE GRANULAR MATERIAL, TYPE B 12"

NOTES:

1. SEE ROADWAY DETAILS FOR VARIABLE HEIGHT OF THE DOUBLE FACE BARRIER WALL AND FOR THE TYING OF THE BARRIER BASE TO THE PCC SHOULDER AND FOR THE LIMITS OF CONSTRUCTION OF THE SUB-BASE GRANULAR MATERIAL UNDER THE DOUBLE FACE BARRIER WALL.
2. SHOULDER RUMBLE STRIPS SHALL BE CONSTRUCTED IN THE PROPOSED AND EXISTING SHOULDERS OF THE LOCAL AND EXPRESS LANES ACCORDING TO IDOT STANDARD 642001.
3. TYPICAL SECTIONS NEED TO BE VERIFIED WITH THE ROADWAY PLANS AS THEY ARE A REPRESENTATION OF THE PLANS. THEY DO NOT SHOW ALL CONFIGURATIONS, JUST THE MOST PREDOMINANT.
4. THE SLOPE OF THE STABILIZED SUB-BASE 4 ½" UNDER THE SHOULDERS AND CURB & GUTTER SHALL MATCH THE SLOPE OF THE ADJACENT PAVEMENT IN THE NORMAL CROWNED AREAS.

PRTYP-2

REVISIONS	
NAME	DATE
ADDENDUM 1	7/27/06

ILLINOIS DEPARTMENT OF TRANSPORTATION
F.A.I. 90/94 (DAN RYAN EXPRESSWAY)
GARFIELD BLVD TO 31ST STREET (NB LOCAL LANES)

PROPOSED TYPICAL SECTIONS
NORTHBOUND LOCAL LANES

SCALE: H:1"=10' V:1"=5' DRAWN BY: NJH
DATE: June 9, 2006 CHECKED BY: RMG

CTE | AECOM

P:\P40468\Civil\13-Cntrs 18 & 19\Sht\Cntr 18\Typical Sections\TSECTIB0022A.sht
7/28/2006 11:10:23 AM

F.A.I.	SECTION	COUNTY	TOTAL SHEETS	SHEET NO.
94/90	*	COOK	565	22
STA.		TO STA.		
FED. ROAD DIST. NO.	ILLINOIS	FED. AID PROJECT		
62301	*(2021-922 PT2 ETC 2324.6-1P) R-10			

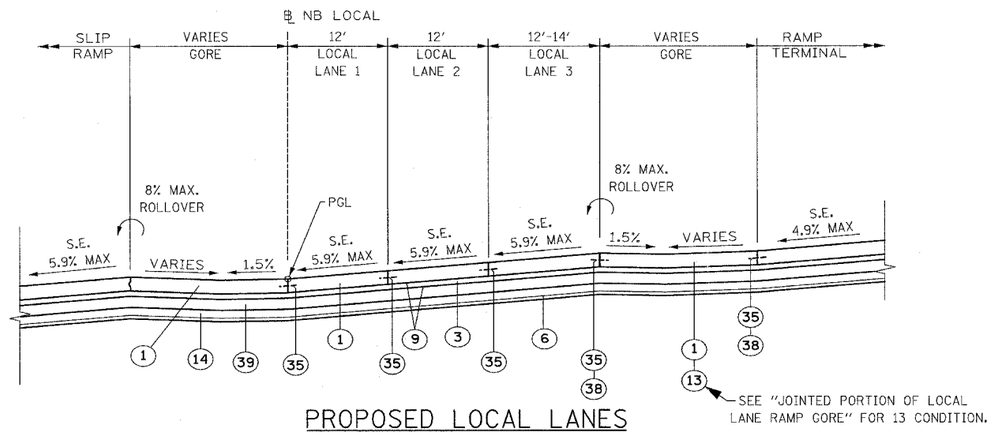

PROPOSED LOCAL LANES

STA. 4536+66.66 TO 4541+90.43 - SUPERELEVATION = 5.9%
(SUPERELEVATION TRANSITION SECTION FROM STA. 4541+90.43 TO 4546+51.92 IS SIMILAR)

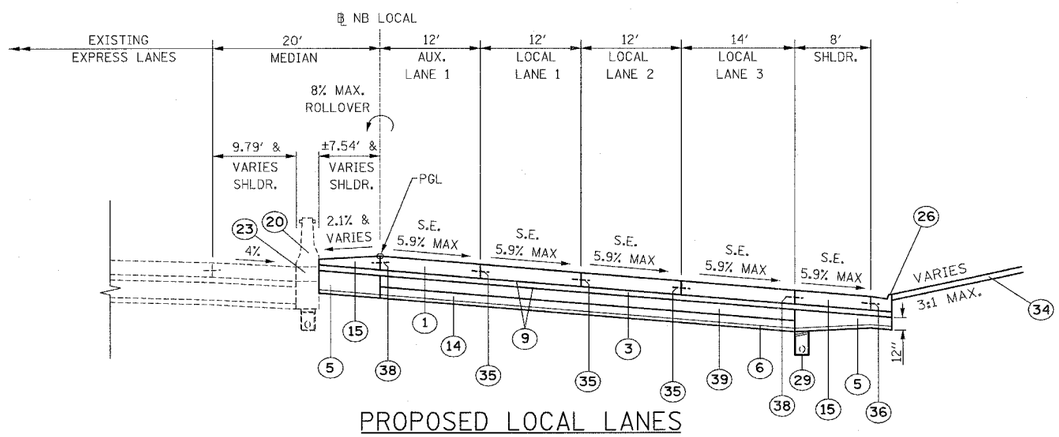

PROPOSED LOCAL LANES

STA. 4529+00 TO STA. 4531+18.51 - SUPERELEVATION = 5.9%
(SUPERELEVATION TRANSITION SECTION FROM STA. 4531+18.51 TO STA. 4536+66.66 IS SIMILAR)

PROPOSED LEGEND

1. CONTINUOUSLY REINFORCED PORTLAND CEMENT CONCRETE PAVEMENT 14" AND PAVEMENT REINFORCEMENT 14"
2. NOT USED
3. STABILIZED SUB-BASE 4½"
4. SUB-BASE GRANULAR MATERIAL, TYPE B 6"
5. SUB-BASE GRANULAR MATERIAL, TYPE B 24"
6. GEOTECHNICAL FABRIC FOR GROUND STABILIZATION
7. BITUMINOUS CONCRETE SURFACE COURSE, SUPERPAVE, MIX "D" N70, 1½"
8. POLYMERIZED LEVELING BINDER (MACHINE METHOD), SUPERPAVE, IL-4.75, N50, 1"
9. BITUMINOUS MATERIALS (PRIME COAT)
10. STRIP REFLECTIVE CRACK CONTROL TREATMENT
11. PORTLAND CEMENT CONCRETE BASE COURSE 9½"
12. PORTLAND CEMENT CONCRETE PAVEMENT 11" (JOINTED)
13. PORTLAND CEMENT CONCRETE SHOULDERS 11"
14. EXCAVATE AND PLACE EXISTING GRANULAR MATERIAL
15. PORTLAND CEMENT CONCRETE SHOULDERS 14" & VAR.
16. CONCRETE GUTTER, TYPE B
17. CONCRETE MEDIAN SURFACE, 5" (MODIFIED)
18. CONCRETE MEDIAN SURFACE, 6" (SPECIAL)
19. CONCRETE MEDIAN SURFACE, 6"
20. CONCRETE BARRIER, DOUBLE FACE, 32" HEIGHT
21. CONCRETE BARRIER, SINGLE FACE, 32" HEIGHT
22. CHAIN LINK FENCE, 4' (SPECIAL)
23. BARRIER BASE
24. BARRIER WALL MARKERS, TYPE C (80' C-C)
25. COMBINATION CONCRETE CURB AND GUTTER, TYPE B-6.12
26. COMBINATION CONCRETE CURB AND GUTTER, TYPE M-2.24
27. COMBINATION CONCRETE CURB AND GUTTER, TYPE M-4.24
28. COMBINATION CONCRETE CURB AND GUTTER, TYPE M-4.48 (MODIFIED)
29. PIPE UNDERDRAINS 6"
30. RETAINING WALL
31. MODIFIED EXISTING RETAINING WALL
32. SAND BACKFILL
33. GUARDRAIL
34. TOPSOIL FURNISH AND PLACE / SEEDING (SEE LANDSCAPING PLANS FOR DETAILS)
35. LONGITUDINAL SAWED OR CONSTRUCTION JOINT. FOR LONGITUDINAL SAWED JOINT, POUR IN PLACE NO. 6 DEFORMED EPOXY TIE BARS 30" LONG AT 30" C-C. FOR LONGITUDINAL CONSTRUCTION JOINT, DRILL AND GROUT NO. 8 DEFORMED EPOXY TIE BARS 24" LONG AT 24" C-C. (SHALL BE INCLUDED IN THE COST OF C.R.P.C.C. PAVEMENT 14")
36. LONGITUDINAL CONSTRUCTION JOINT. DRILL AND GROUT NO. 6 DEFORMED EPOXY TIE BARS 24" LONG AT 24" C-C. (SHALL BE INCLUDED IN THE COST OF THE APPLICABLE COMB. CONC. CURB AND GUTTER TYPE)
37. LONGITUDINAL CONSTRUCTION JOINT. DRILL AND GROUT NO. 8 DEFORMED EPOXY TIE BARS 24" LONG AT 24" C-C. (SHALL BE INCLUDED IN THE COST OF P.C.C. BASE COURSE 9")
38. LONGITUDINAL CONSTRUCTION JOINT. DRILL AND GROUT NO. 8 DEFORMED EPOXY TIE BARS 30" LONG AT 24" C-C. (SHALL BE INCLUDED IN THE COST OF THE APPLICABLE P.C.C. SHOULDER TYPE)
39. SUB-BASE GRANULAR MATERIAL, TYPE B 12"

MAINLINE:

STRUCTURAL DESIGN TRAFFIC:		YEAR 2020
PV= 125,272	SU= 10,930	MU= 31,949
ROAD/STREET CLASSIFICATION:		CLASS 1
P= 8%	S= 37%	M= 37%
TRAFFIC FACTOR:	ACTUAL TF= 264.46	AC TYPE= N/A
	MINIMUM TF= 12.39	
AC GRADE:	BINDER:= -	SURFACE:= -
SUBGRADE SUPPORT RATING:		
SSR= 2.00		

NOTES:

1. SEE ROADWAY DETAILS FOR VARIABLE HEIGHT OF THE DOUBLE FACE BARRIER WALL AND FOR THE TYING OF THE BARRIER BASE TO THE PCC SHOULDER AND FOR THE LIMITS OF CONSTRUCTION OF THE SUB-BASE GRANULAR MATERIAL UNDER THE DOUBLE FACE BARRIER WALL.
2. SHOULDER RUMBLE STRIPS SHALL BE CONSTRUCTED IN THE PROPOSED AND EXISTING SHOULDERS OF THE LOCAL AND EXPRESS LANES ACCORDING TO IDOT STANDARD 642001.
3. TYPICAL SECTIONS NEED TO BE VERIFIED WITH THE ROADWAY PLANS AS THEY ARE A REPRESENTATION OF THE PLANS. THEY DO NOT SHOW ALL CONFIGURATIONS, JUST THE MOST PREDOMINANT.
4. THE SLOPE OF THE STABILIZED SU-BASE 4½" UNDER THE SHOULDERS AND CURB AND GUTTER SHALL MATCH THE SLOPE OF THE ADJACENT PAVEMENT IN THE NORMAL CROWNED AREAS.

** SEE PLAN SHEETS FOR DETAILS

PRTYP-3

REVISIONS	
NAME	DATE
ADDENDUM 1	7/28/06

ILLINOIS DEPARTMENT OF TRANSPORTATION
F.A.I. 94/90 (DAN RYAN EXPRESSWAY)
GARFIELD BLVD TO 31ST STREET (NB LOCAL LANES)

PROPOSED TYPICAL SECTIONS

SCALE: NTS | DRAWN BY: JDC
DATE: 06/09/06 | CHECKED BY: RS

BOWMAN, BARRETT & ASSOCIATES INC.
CONSULTING ENGINEERS
Chicago, Illinois
312.228.0100
www.bbandainc.com

N:\06Dcadd\dgn\IN\SHEETS\660_J8CT5004.dgn
7/28/2006 1:26:24 PM

F.A.I.	SECTION	COUNTY	TOTAL SHEETS	SHEET NO.
94/90	*	COOK	565	23
STA.		TO STA.		
FED. ROAD DIST. NO.	ILLINOIS	FED. AID PROJECT		
62301	*(2021-922 PT2 ETC 2324.6-1P) R-10			

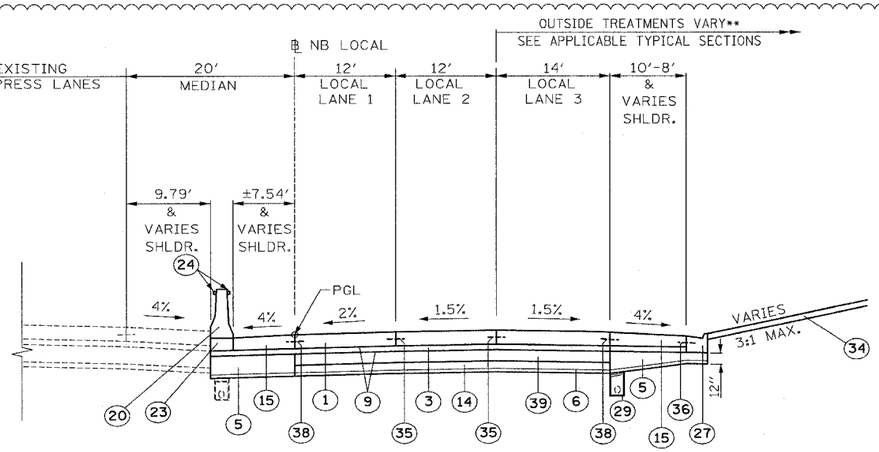

PROPOSED LOCAL LANES

STA. 4546+51.92 TO 4621+95.71

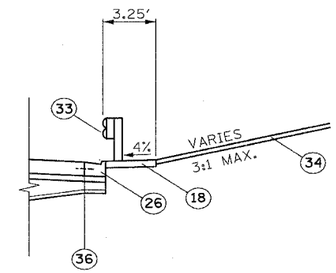

PROPOSED GUARDRAIL

STA. 4542+72.57 TO 4545+15.00
STA. 4553+91.45 TO 4556+05.48
STA. 4563+70.74 TO 4565+96.23
STA. 4567+97.84 TO 4571+03.58
STA. 4580+08.63 TO 4582+24.50
STA. 4606+07.70 TO 4608+96.85

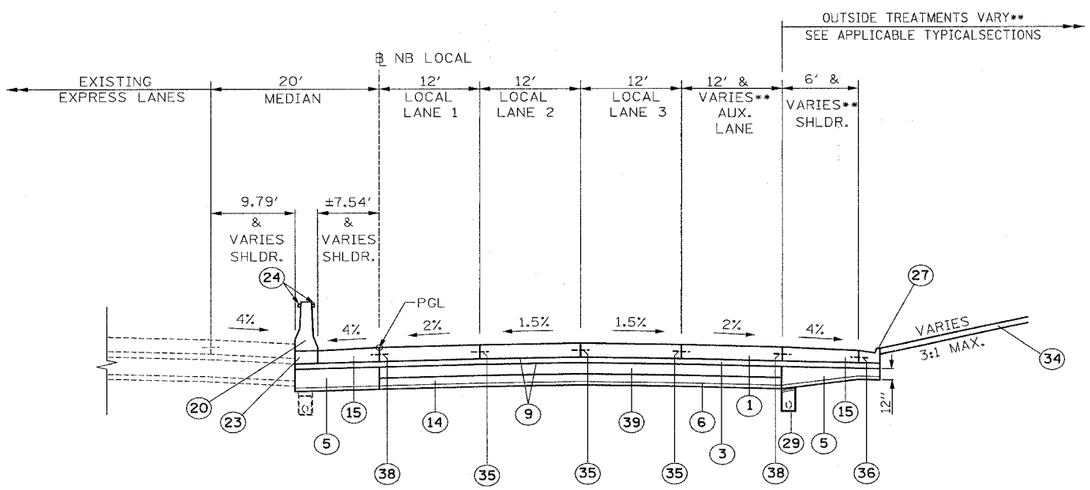

PROPOSED LOCAL LANES WITH AUXILIARY LANE

STA. 4546+51.92 TO 4554+69.29
STA. 4568+20.79 TO 4577+27.26
STA. 4621+95.71 TO 4634+58.10

MAINLINE:

STRUCTURAL DESIGN TRAFFIC:		YEAR 2020
PV= 125,272	SU= 10,930	MU= 31,949
ROAD/STREET CLASSIFICATION:		CLASS 1
P= 8%	S= 37%	M= 37%
TRAFFIC FACTOR:	ACTUAL TF= 264.46	AC TYPE= N/A
	MINIMUM TF= 12.39	
AC GRADE:	BINDER:= -	SURFACE:= -
SUBGRADE SUPPORT RATING:		
SSR= 2.00		

PROPOSED LEGEND

1. CONTINUOUSLY REINFORCED PORTLAND CEMENT CONCRETE PAVEMENT 14" AND PAVEMENT REINFORCEMENT 14"
2. NOT USED
3. STABILIZED SUB-BASE 4½"
4. SUB-BASE GRANULAR MATERIAL, TYPE B 6"
5. SUB-BASE GRANULAR MATERIAL, TYPE B 24"
6. GEOTECHNICAL FABRIC FOR GROUND STABILIZATION
7. BITUMINOUS CONCRETE SURFACE COURSE, SUPERPAVE, MIX "D" N70, 1½"
8. POLYMERIZED LEVELING BINDER (MACHINE METHOD), SUPERPAVE, IL-4.75, N50, 1"
9. BITUMINOUS MATERIALS (PRIME COAT)
10. STRIP REFLECTIVE CRACK CONTROL TREATMENT
11. PORTLAND CEMENT CONCRETE BASE COURSE 9½"
12. PORTLAND CEMENT CONCRETE PAVEMENT 11" (JOINTED)
13. PORTLAND CEMENT CONCRETE SHOULDERS 11"
14. EXCAVATE AND PLACE EXISTING GRANULAR MATERIAL
15. PORTLAND CEMENT CONCRETE SHOULDERS 14" (& VAR.)
16. CONCRETE GUTTER, TYPE B
17. CONCRETE MEDIAN SURFACE, 5" (MODIFIED)
18. CONCRETE MEDIAN SURFACE, 6" (SPECIAL)
19. CONCRETE MEDIAN SURFACE, 6"
20. CONCRETE BARRIER, DOUBLE FACE, 32" HEIGHT
21. CONCRETE BARRIER, SINGLE FACE, 32" HEIGHT
22. CHAIN LINK FENCE, 4' (SPECIAL)
23. BARRIER BASE
24. BARRIER WALL MARKERS, TYPE C (80' C-C)
25. COMBINATION CONCRETE CURB AND GUTTER, TYPE B-6.12
26. COMBINATION CONCRETE CURB AND GUTTER, TYPE M-2.24
27. COMBINATION CONCRETE CURB AND GUTTER, TYPE M-4.24
28. COMBINATION CONCRETE CURB AND GUTTER, TYPE M-4.48 (MODIFIED)
29. PIPE UNDERDRAINS 6"
30. RETAINING WALL
31. MODIFIED EXISTING RETAINING WALL
32. SAND BACKFILL
33. GUARDRAIL
34. TOPSOIL FURNISH AND PLACE / SEEDING (SEE LANDSCAPING PLANS FOR DETAILS)
35. LONGITUDINAL SAWED OR CONSTRUCTION JOINT. FOR LONGITUDINAL SAWED JOINT, POUR IN PLACE NO. 6 DEFORMED EPOXY TIE BARS 30" LONG AT 30" C-C. FOR LONGITUDINAL CONSTRUCTION JOINT, DRILL AND GROUT NO. 8 DEFORMED EPOXY TIE BARS 24" LONG AT 24" C-C. (SHALL BE INCLUDED IN THE COST OF C.R.P.C.C. PAVEMENT 14")
36. LONGITUDINAL CONSTRUCTION JOINT. DRILL AND GROUT NO. 6 DEFORMED EPOXY TIE BARS 24" LONG AT 24" C-C. (SHALL BE INCLUDED IN THE COST OF THE APPLICABLE COMB. CONC. CURB AND GUTTER TYPE)
37. LONGITUDINAL CONSTRUCTION JOINT. DRILL AND GROUT NO. 8 DEFORMED EPOXY TIE BARS 24" LONG AT 24" C-C. (SHALL BE INCLUDED IN THE COST OF P.C.C. BASE COURSE 9")
38. LONGITUDINAL CONSTRUCTION JOINT. DRILL AND GROUT NO. 8 DEFORMED EPOXY TIE BARS 30" LONG AT 24" C-C. (SHALL BE INCLUDED IN THE COST OF THE APPLICABLE P.C.C. SHOULDER TYPE)
39. SUB-BASE GRANULAR MATERIAL, TYPE B 12"

NOTES:

1. SEE ROADWAY DETAILS FOR VARIABLE HEIGHT OF THE DOUBLE FACE BARRIER WALL AND FOR THE TYING OF THE BARRIER BASE TO THE PCC SHOULDER AND FOR THE LIMITS OF CONSTRUCTION OF THE SUB-BASE GRANULAR MATERIAL UNDER THE DOUBLE FACE BARRIER WALL.
2. SHOULDER RUMBLE STRIPS SHALL BE CONSTRUCTED IN THE PROPOSED AND EXISTING SHOULDERS OF THE LOCAL AND EXPRESS LANES ACCORDING TO IDOT STANDARD 642001.
3. TYPICAL SECTIONS NEED TO BE VERIFIED WITH THE ROADWAY PLANS AS THEY ARE A REPRESENTATION OF THE PLANS. THEY DO NOT SHOW ALL CONFIGURATIONS, JUST THE MOST PREDOMINANT.
4. THE SLOPE OF THE STABILIZED SU-BASE 4½" UNDER THE SHOULDERS AND CURB AND GUTTER SHALL MATCH THE SLOPE OF THE ADJACENT PAVEMENT IN THE NORMAL CROWNED AREAS.

** SEE PLAN SHEETS FOR DETAILS

PRTYP-4

REVISIONS	
NAME	DATE
ADDENDUM 1	7/28/06

ILLINOIS DEPARTMENT OF TRANSPORTATION

F.A.I. 94/90 (DAN RYAN EXPRESSWAY)

GARFIELD BLVD TO 31ST STREET (NB LOCAL LANES)

PROPOSED TYPICAL SECTIONS

SCALE: NTS | DRAWN BY: JDC

DATE: 06/09/06 | CHECKED BY: RS

BOWMAN, BARRETT & ASSOCIATES INC.
CONSULTING ENGINEERS
Chicago, Illinois
312.228.0100
www.bbandainc.com

N:\660Cadd\ACIVIL\0SHEETS\660_JBC SSOA.dgn

7/28/2006 1:25:49 PM

F.A.I.	SECTION	COUNTY	TOTAL SHEETS	SHEET NO.
94/90	*	COOK	565	24
STA.		TO STA.		
FED. ROAD DIST. NO.	ILLINOIS	FED. AID PROJECT		
62301	*(2021-922 PT2 ETC 2324.6-1P) R-10			

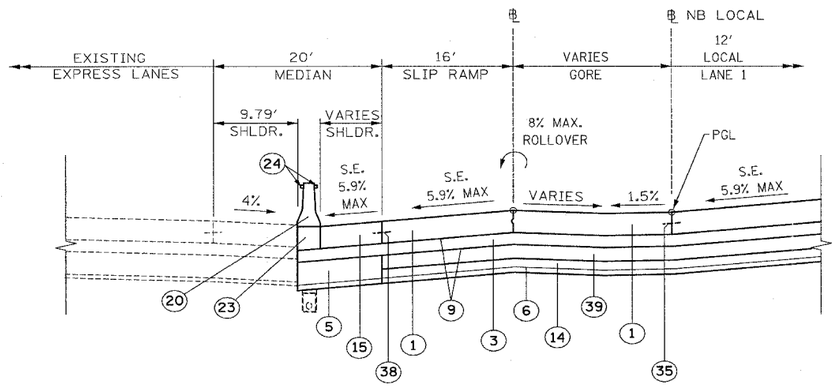

PROPOSED SLIP RAMP

STA. 810+67.35 TO 815+65 - SUPERELEVATION = 5.9%

(SUPERELEVATION TRANSITION SECTION FROM STA. 810+00 TO 810+67.35 IS SIMILAR)

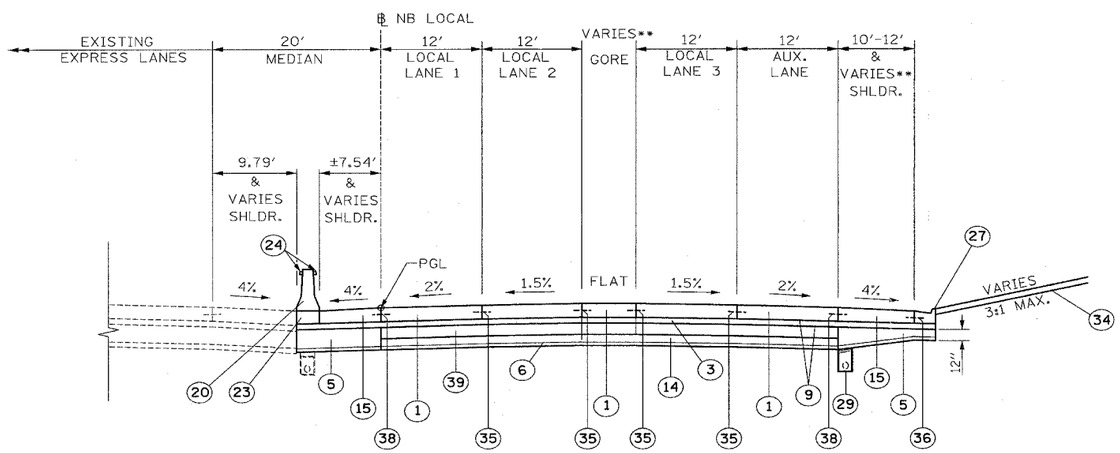

PROPOSED LOCAL LANE DIVERGENCE

STA. 4634+58.1 TO 4638+05

PROPOSED LEGEND

1. CONTINUOUSLY REINFORCED PORTLAND CEMENT CONCRETE PAVEMENT 14″ AND PAVEMENT REINFORCEMENT 14″
2. NOT USED
3. STABILIZED SUB-BASE 4½″
4. SUB-BASE GRANULAR MATERIAL, TYPE B 6″
5. SUB-BASE GRANULAR MATERIAL, TYPE B 24″
6. GEOTECHNICAL FABRIC FOR GROUND STABILIZATION
7. BITUMINOUS CONCRETE SURFACE COURSE, SUPERPAVE, MIX "D" N70, 1½″
8. POLYMERIZED LEVELING BINDER (MACHINE METHOD), SUPERPAVE, IL-4.75, N50, 1″
9. BITUMINOUS MATERIALS (PRIME COAT)
10. STRIP REFLECTIVE CRACK CONTROL TREATMENT
11. PORTLAND CEMENT CONCRETE BASE COURSE 9½″
12. PORTLAND CEMENT CONCRETE PAVEMENT 11″ (JOINTED)
13. PORTLAND CEMENT CONCRETE SHOULDERS 11″
14. EXCAVATE AND PLACE EXISTING GRANULAR MATERIAL
15. PORTLAND CEMENT CONCRETE SHOULDERS 14″ (& VAR.)
16. CONCRETE GUTTER, TYPE B
17. CONCRETE MEDIAN SURFACE, 5″ (MODIFIED)
18. CONCRETE MEDIAN SURFACE, 6″ (SPECIAL)
19. CONCRETE MEDIAN SURFACE, 6″
20. CONCRETE BARRIER, DOUBLE FACE, 32″ HEIGHT
21. CONCRETE BARRIER, SINGLE FACE, 32″ HEIGHT
22. CHAIN LINK FENCE, 4′ (SPECIAL)
23. BARRIER BASE
24. BARRIER WALL MARKERS, TYPE C (80′ C-C)
25. COMBINATION CONCRETE CURB AND GUTTER, TYPE B-6.12
26. COMBINATION CONCRETE CURB AND GUTTER, TYPE M-2.24
27. COMBINATION CONCRETE CURB AND GUTTER, TYPE M-4.24
28. COMBINATION CONCRETE CURB AND GUTTER, TYPE M-4.48 (MODIFIED)
29. PIPE UNDERDRAINS 6″
30. RETAINING WALL
31. MODIFIED EXISTING RETAINING WALL
32. SAND BACKFILL
33. GUARDRAIL
34. TOPSOIL FURNISH AND PLACE / SEEDING (SEE LANDSCAPING PLANS FOR DETAILS)
35. LONGITUDINAL SAWED OR CONSTRUCTION JOINT. FOR LONGITUDINAL SAWED JOINT, POUR IN PLACE NO. 6 DEFORMED EPOXY TIE BARS 30″ LONG AT 30″ C-C. FOR LONGITUDINAL CONSTRUCTION JOINT, DRILL AND GROUT NO. 8 DEFORMED EPOXY TIE BARS 24″ LONG AT 24″ C-C. (SHALL BE INCLUDED IN THE COST OF C.R.P.C.C. PAVEMENT 14″)
36. LONGITUDINAL CONSTRUCTION JOINT. DRILL AND GROUT NO. 6 DEFORMED EPOXY TIE BARS 24″ LONG AT 24″ C-C. (SHALL BE INCLUDED IN THE COST OF THE APPLICABLE COMB. CONC. CURB AND GUTTER TYPE)
37. LONGITUDINAL CONSTRUCTION JOINT. DRILL AND GROUT NO. 8 DEFORMED EPOXY TIE BARS 24″ LONG AT 24″ C-C. (SHALL BE INCLUDED IN THE COST OF P.C.C. BASE COURSE 9″)
38. LONGITUDINAL CONSTRUCTION JOINT. DRILL AND GROUT NO. 8 DEFORMED EPOXY TIE BARS 30″ LONG AT 24″ C-C. (SHALL BE INCLUDED IN THE COST OF THE APPLICABLE P.C.C. SHOULDER TYPE)
39. SUB-BASE GRANULAR MATERIAL, TYPE B 12″

PRTYP-5

MAINLINE:

STRUCTURAL DESIGN TRAFFIC:		YEAR 2020
PV= 125,272	SU= 10,930	MU= 31,949
ROAD/STREET CLASSIFICATION:		CLASS 1
P= 8%	S= 37%	M= 37%
TRAFFIC FACTOR:	ACTUAL TF= 264.46	AC TYPE= N/A
	MINIMUM TF= 12.39	
AC GRADE:	BINDER:= -	SURFACE:= -
SUBGRADE SUPPORT RATING:		
SSR= 2.00		

NOTES:

1. SEE ROADWAY DETAILS FOR VARIABLE HEIGHT OF THE DOUBLE FACE BARRIER WALL AND FOR THE TYING OF THE BARRIER BASE TO THE PCC SHOULDER AND FOR THE LIMITS OF CONSTRUCTION OF THE SUB-BASE GRANULAR MATERIAL UNDER THE DOUBLE FACE BARRIER WALL.
2. SHOULDER RUMBLE STRIPS SHALL BE CONSTRUCTED IN THE PROPOSED AND EXISTING SHOULDERS OF THE LOCAL AND EXPRESS LANES ACCORDING TO IDOT STANDARD 642001.
3. TYPICAL SECTIONS NEED TO BE VERIFIED WITH THE ROADWAY PLANS AS THEY ARE A REPRESENTATION OF THE PLANS. THEY DO NOT SHOW ALL CONFIGURATIONS, JUST THE MOST PREDOMINANT.
4. THE SLOPE OF THE STABILIZED SU-BASE 4½″ UNDER THE SHOULDERS AND CURB AND GUTTER SHALL MATCH THE SLOPE OF THE ADJACENT PAVEMENT IN THE NORMAL CROWNED AREAS.

** SEE PLAN SHEETS FOR DETAILS

BOWMAN, BARRETT & ASSOCIATES INC.
CONSULTING ENGINEERS
Chicago, Illinois
312.228.0100
www.bbandainc.com

REVISIONS	
NAME	DATE
ADDENDUM 1	7/28/06

ILLINOIS DEPARTMENT OF TRANSPORTATION

F.A.I. 94/90 (DAN RYAN EXPRESSWAY)

GARFIELD BLVD TO 31ST STREET (NB LOCAL LANES)

PROPOSED TYPICAL SECTIONS

SCALE: NTS | DRAWN BY: JDC

DATE: 06/09/06 | CHECKED BY: RS

N:\660\add\civil\IB\SHEET\S660_IBCT300.dgn

7/28/2006 12:26:26 PM

F.A.I.	SECTION	COUNTY	TOTAL SHEETS	SHEET NO.
94/90	*	COOK	565	25
STA.		TO STA.		
FED. ROAD DIST. NO.	ILLINOIS	FED. AID PROJECT		
62301	*(2021-922 PT2 ETC 2324.6-1P) R-10			

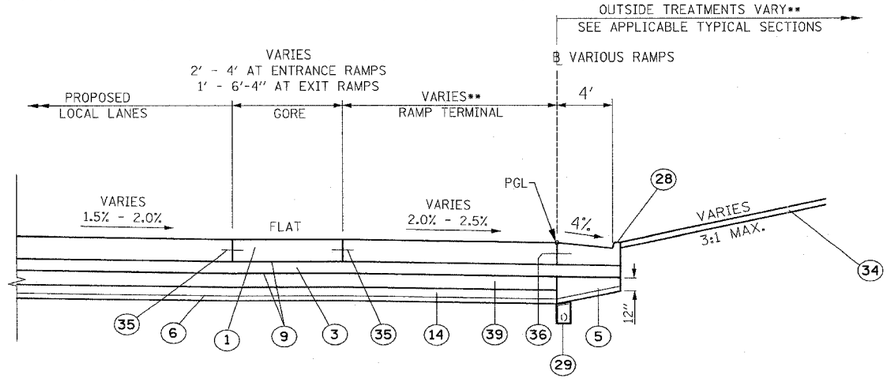

CRC PORTION OF LOCAL LANE RAMP GORE

RAMP		STATION
47B	-	6067+60.90 TO 6067+93.79
43D	-	8052+82.88 TO 8053+44.04
43B	-	6047+20.50 TO 6047+87.94
39C	-	8042+80.06 TO 8043+46.16
T35C	-	8022+17.35 TO 8022+78.44
T39B	-	6025+68.75 TO 6026+50.58
35B	-	6006+98.87 TO 6007+58.68
31C	-	8001+94.40 TO 8002+55.49

MAINLINE:

STRUCTURAL DESIGN TRAFFIC:		YEAR 2020
PV= 125,272	SU= 10,930	MU= 31,949
ROAD/STREET CLASSIFICATION:		CLASS 1
P= 8%	S= 37%	M= 37%
TRAFFIC FACTOR:	ACTUAL TF= 264.46	AC TYPE= N/A
	MINIMUM TF= 12.39	
AC GRADE:	BINDER:= -	SURFACE:= -
SUBGRADE SUPPORT RATING:		
SSR= 2.00		

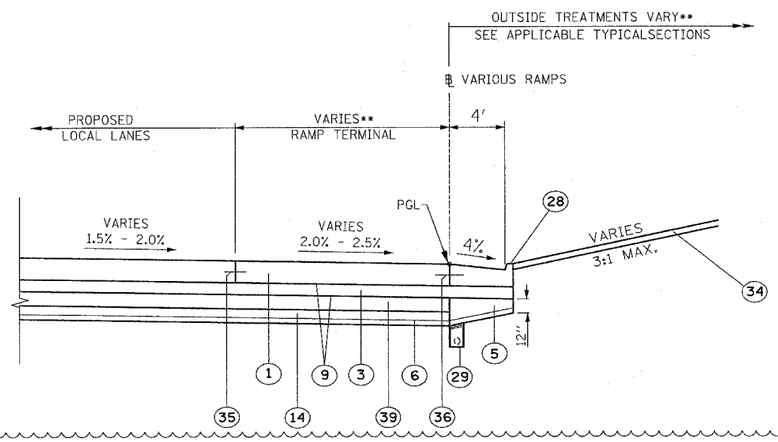

CRC LOCAL LANE RAMP TERMINAL

RAMP		STATION
47B	-	6067+93.79 TO 6069+64.12
43D	-	8051+00 TO 8052+82.88
43B	-	6047+87.94 TO 6050+27.76
39C	-	8040+00 TO 8042+80.06
T35C	-	8020+34.47 TO 8022+17.35
T39B	-	6026+50.58 TO 6033+30.58
35B	-	6007+58.68 TO 6009+98.58
31C	-	8000+11.68 TO 8001+94.40

PROPOSED LEGEND

1. CONTINUOUSLY REINFORCED PORTLAND CEMENT CONCRETE PAVEMENT 14" AND PAVEMENT REINFORCEMENT 14"
2. NOT USED
3. STABILIZED SUB-BASE 4½" △1
4. SUB-BASE GRANULAR MATERIAL, TYPE B 6"
5. SUB-BASE GRANULAR MATERIAL, TYPE B 24"
6. GEOTECHNICAL FABRIC FOR GROUND STABILIZATION
7. BITUMINOUS CONCRETE SURFACE COURSE, SUPERPAVE, MIX "D" N70, 1½"
8. POLYMERIZED LEVELING BINDER (MACHINE METHOD), SUPERPAVE, IL-4.75, N50, 1"
9. BITUMINOUS MATERIALS (PRIME COAT)
10. STRIP REFLECTIVE CRACK CONTROL TREATMENT
11. PORTLAND CEMENT CONCRETE BASE COURSE 9½"
12. PORTLAND CEMENT CONCRETE PAVEMENT 11" (JOINTED)
13. PORTLAND CEMENT CONCRETE SHOULDERS 11"
14. EXCAVATE AND PLACE EXISTING GRANULAR MATERIAL △1
15. PORTLAND CEMENT CONCRETE SHOULDERS 14" & VAR △1
16. CONCRETE GUTTER, TYPE B
17. CONCRETE MEDIAN SURFACE, 5" (MODIFIED)
18. CONCRETE MEDIAN SURFACE, 6" (SPECIAL)
19. CONCRETE MEDIAN SURFACE, 6"
20. CONCRETE BARRIER, DOUBLE FACE, 32" HEIGHT
21. CONCRETE BARRIER, SINGLE FACE, 32" HEIGHT
22. CHAIN LINK FENCE, 4' (SPECIAL)
23. BARRIER BASE
24. BARRIER WALL MARKERS, TYPE C (80' C-C)
25. COMBINATION CONCRETE CURB AND GUTTER, TYPE B-6.12
26. COMBINATION CONCRETE CURB AND GUTTER, TYPE M-2.24
27. COMBINATION CONCRETE CURB AND GUTTER, TYPE M-4.24
28. COMBINATION CONCRETE CURB AND GUTTER, TYPE M-4.48 (MODIFIED)
29. PIPE UNDERDRAINS 6"
30. RETAINING WALL
31. MODIFIED EXISTING RETAINING WALL
32. SAND BACKFILL
33. GUARDRAIL
34. TOPSOIL FURNISH AND PLACE △1 / SEEDING (SEE LANDSCAPING PLANS FOR DETAILS)
35. LONGITUDINAL SAWED OR CONSTRUCTION JOINT. FOR LONGITUDINAL SAWED JOINT, POUR IN PLACE NO. 6 DEFORMED EPOXY TIE BARS 30" LONG AT 30" C-C. FOR LONGITUDINAL CONSTRUCTION JOINT, DRILL AND GROUT NO. 8 DEFORMED EPOXY TIE BARS 24" LONG AT 24" C-C. (SHALL BE INCLUDED IN THE COST OF C.R.P.C.C. PAVEMENT 14")
36. LONGITUDINAL CONSTRUCTION JOINT. DRILL AND GROUT NO. 6 DEFORMED EPOXY TIE BARS 24" LONG AT 24" C-C. (SHALL BE INCLUDED IN THE COST OF THE APPLICABLE COMB. CONC. CURB AND GUTTER TYPE)
37. LONGITUDINAL CONSTRUCTION JOINT. DRILL AND GROUT NO. 8 DEFORMED EPOXY TIE BARS 24" LONG AT 24" C-C. (SHALL BE INCLUDED IN THE COST OF P.C.C. BASE COURSE 9")
38. LONGITUDINAL CONSTRUCTION JOINT. DRILL AND GROUT NO. 8 DEFORMED EPOXY TIE BARS 30" LONG AT 24" C-C. (SHALL BE INCLUDED IN THE COST OF THE APPLICABLE P.C.C. SHOULDER TYPE) △1
39. SUB-BASE GRANULAR MATERIAL, TYPE B 12" △1

NOTES:

1. SEE ROADWAY DETAILS FOR VARIABLE HEIGHT OF THE DOUBLE FACE BARRIER WALL AND FOR THE TYING OF THE BARRIER BASE TO THE PCC SHOULDER AND FOR THE LIMITS OF CONSTRUCTION OF THE SUB-BASE GRANULAR MATERIAL UNDER THE DOUBLE FACE BARRIER WALL.
2. SHOULDER RUMBLE STRIPS SHALL BE CONSTRUCTED IN THE PROPOSED AND EXISTING SHOULDERS OF THE LOCAL AND EXPRESS LANES ACCORDING TO IDOT STANDARD 642001.
3. TYPICAL SECTIONS NEED TO BE VERIFIED WITH THE ROADWAY PLANS AS THEY ARE A REPRESENTATION OF THE PLANS. THEY DO NOT SHOW ALL CONFIGURATIONS, JUST THE MOST PREDOMINANT.
4. THE SLOPE OF THE STABILIZED SU-BASE 4½" UNDER THE SHOULDERS AND CURB AND GUTTER SHALL MATCH THE SLOPE OF THE ADJACENT PAVEMENT IN THE NORMAL CROWNED AREAS. △1

** SEE PLAN SHEETS FOR DETAILS

PRTYP-6

BOWMAN, BARRETT & ASSOCIATES INC.
CONSULTING ENGINEERS
Chicago, Illinois
312.228.0100
www.bbandainc.com

REVISIONS	
NAME	DATE
△1 ADDENDUM 1	7/28/06

ILLINOIS DEPARTMENT OF TRANSPORTATION

F.A.I. 94/90 (DAN RYAN EXPRESSWAY)

GARFIELD BLVD TO 31ST STREET (NB LOCAL LANES)

PROPOSED TYPICAL SECTIONS

SCALE: NTS | DRAWN BY: JDC

DATE: 06/09/06 | CHECKED BY: RS

N:\660\cad\civil\NB\SHEETS\660_DET SSD.dgn 7/28/2006 12:45:58 PM

F.A.I.	SECTION	COUNTY	TOTAL SHEETS	SHEET NO.
94/90	*	COOK	565	26
STA.		TO STA.		
FED. ROAD DIST. NO.	ILLINOIS	FED. AID PROJECT		
62301	*(2021-922 PT2 ETC 2324.6-1P) R-10			

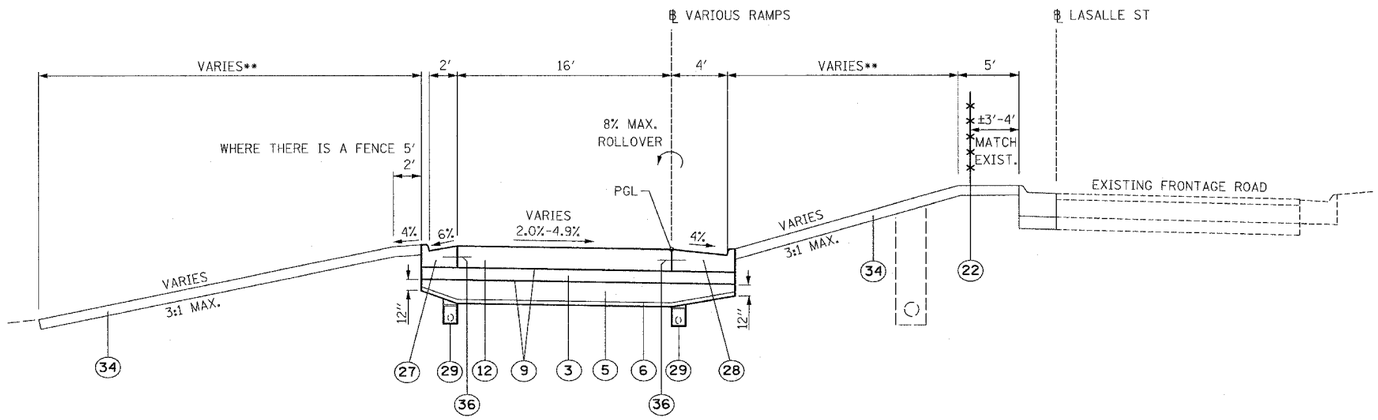

PROPOSED ONE LANE RAMP

RAMP		STATION	
47B	-	6060+19.89 TO 6064+73.20 Ⓧ	(INVERT RAMP 47B GUTTER FLAG 2% ONTO RAMP PAVEMENT FROM FRONTAGE ROAD CURB AND GUTTER TO STA. 6060+41)
43D	-	8053+88.78 TO 8058+71.26 ⊗Ⓨ	(INVERT RAMP 43D GUTTER FLAG 2% ONTO RAMP PAVEMENT FROM STA 8058+60 TO FRONTAGE ROAD CURB AND GUTTER)
43B	-	6040+67.30 TO 6045+41.66	(INVERT RAMP 43B GUTTER FLAG 2% ONTO RAMP PAVEMENT FROM FRONTAGE ROAD CURB AND GUTTER TO STA 6040+99)
39C	-	8043+87.00 TO 8050+40.99 Ⓩ	
T35C	-	8024+07.51 TO 8024+43.44 Ⓨ	
T39B	-	6022+98.98 TO 6023+50.34	
35B	-	6004+13.87 TO 6004+72.35 Ⓨ	
31C	-	(EXISTING TO REMAIN IN PLACE) ⊗Ⓨ	

Ⓧ SEE "PROPOSED TYPICAL INSIDE RAMP SHOULDER TREATMENT WITH RETAINING WALL" FOR LEFT SIDE TREATMENT.
Ⓨ SEE "EARTH RETAINING RAMP BARRIER WALL" FOR RIGHT SIDE TREATMENT.

RAMPS:

STRUCTURAL DESIGN TRAFFIC:		YEAR 2020
PV= 16,758	SU= 532	MU= 1,710
ROAD/STREET CLASSIFICATION:		CLASS 1
P= 100%	S= 100%	M= 100%
TRAFFIC FACTOR:	ACTUAL TF= 38.10	AC TYPE= N/A
	MINIMUM TF= 16.75	
AC GRADE:	BINDER:= -	SURFACE:= -
SUBGRADE SUPPORT RATING:		
SSR= 2.00		

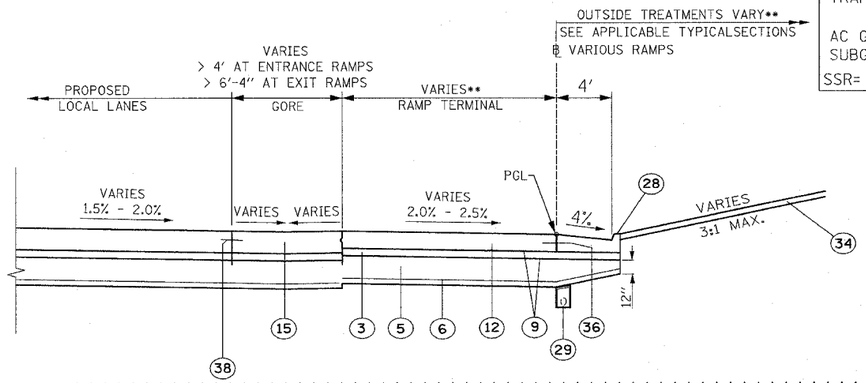

JOINTED PORTION OF LOCAL LANE RAMP GORE

RAMP		STATION
47B	-	6064+73.20 TO 6067+60.90
43D	-	8053+44.04 TO 8053+88.78
43B	-	6045+41.66 TO 6047+20.50
39C	-	8043+46.16 TO 8043+87.00
T35C	-	8022+78.44 TO 8024+07.51
T39B	-	6023+50.34 TO 6025+68.75
35B	-	6004+72.35 TO 6006+98.87
31C	-	8002+55.49 TO 8004+20.57

PROPOSED LEGEND

1. CONTINUOUSLY REINFORCED PORTLAND CEMENT CONCRETE PAVEMENT 14" AND PAVEMENT REINFORCEMENT 14"
2. NOT USED
3. STABILIZED SUB-BASE 4½" △1
4. SUB-BASE GRANULAR MATERIAL, TYPE B 6"
5. SUB-BASE GRANULAR MATERIAL, TYPE B 24"
6. GEOTECHNICAL FABRIC FOR GROUND STABILIZATION
7. BITUMINOUS CONCRETE SURFACE COURSE, SUPERPAVE, MIX "D" N70, 1½"
8. POLYMERIZED LEVELING BINDER (MACHINE METHOD), SUPERPAVE, IL-4.75, N50, 1"
9. BITUMINOUS MATERIALS (PRIME COAT)
10. STRIP REFLECTIVE CRACK CONTROL TREATMENT
11. PORTLAND CEMENT CONCRETE BASE COURSE 9½"
12. PORTLAND CEMENT CONCRETE PAVEMENT 11" (JOINTED)
13. PORTLAND CEMENT CONCRETE SHOULDERS 11"
14. EXCAVATE AND PLACE EXISTING GRANULAR MATERIAL △1
15. PORTLAND CEMENT CONCRETE SHOULDERS 14" & VAR.
16. CONCRETE GUTTER, TYPE B
17. CONCRETE MEDIAN SURFACE, 5" (MODIFIED)
18. CONCRETE MEDIAN SURFACE, 6" (SPECIAL)
19. CONCRETE MEDIAN SURFACE, 6"
20. CONCRETE BARRIER, DOUBLE FACE, 32" HEIGHT
21. CONCRETE BARRIER, SINGLE FACE, 32" HEIGHT
22. CHAIN LINK FENCE, 4' (SPECIAL)
23. BARRIER BASE
24. BARRIER WALL MARKERS, TYPE C (80' C-C)
25. COMBINATION CONCRETE CURB AND GUTTER, TYPE B-6.12
26. COMBINATION CONCRETE CURB AND GUTTER, TYPE M-2.24
27. COMBINATION CONCRETE CURB AND GUTTER, TYPE M-4.24
28. COMBINATION CONCRETE CURB AND GUTTER, TYPE M-4.48 (MODIFIED)
29. PIPE UNDERDRAINS 6"
30. RETAINING WALL
31. MODIFIED EXISTING RETAINING WALL
32. SAND BACKFILL
33. GUARDRAIL △1
34. TOPSOIL FURNISH AND PLACE △1 SEEDING (SEE LANDSCAPING PLANS FOR DETAILS)
35. LONGITUDINAL SAWED OR CONSTRUCTION JOINT. FOR LONGITUDINAL SAWED JOINT, POUR IN PLACE NO. 6 DEFORMED EPOXY TIE BARS 30" LONG AT 30" C-C. FOR LONGITUDINAL CONSTRUCTION JOINT, DRILL AND GROUT NO. 8 DEFORMED EPOXY TIE BARS 24" LONG AT 24" C-C. (SHALL BE INCLUDED IN THE COST OF C.R.P.C.C. PAVEMENT 14")
36. LONGITUDINAL CONSTRUCTION JOINT. DRILL AND GROUT NO. 6 DEFORMED EPOXY TIE BARS 24" LONG AT 24" C-C. (SHALL BE INCLUDED IN THE COST OF THE APPLICABLE COMB. CONC. CURB AND GUTTER TYPE)
37. LONGITUDINAL CONSTRUCTION JOINT. DRILL AND GROUT NO. 8 DEFORMED EPOXY TIE BARS 24" LONG AT 24" C-C. (SHALL BE INCLUDED IN THE COST OF P.C.C. BASE COURSE 9")
38. LONGITUDINAL CONSTRUCTION JOINT. DRILL AND GROUT NO. 8 DEFORMED EPOXY TIE BARS 30" LONG AT 24" C-C. (SHALL BE INCLUDED IN THE COST OF THE APPLICABLE P.C.C. SHOULDER TYPE) △1
39. SUB-BASE GRANULAR MATERIAL, TYPE B 12" △1

PRTYP-7

NOTES:
1. SEE ROADWAY DETAILS FOR VARIABLE HEIGHT OF THE DOUBLE FACE BARRIER WALL AND FOR THE TYING OF THE BARRIER BASE TO THE PCC SHOULDER AND FOR THE LIMITS OF CONSTRUCTION OF THE SUB-BASE GRANULAR MATERIAL UNDER THE DOUBLE FACE BARRIER WALL.
2. SHOULDER RUMBLE STRIPS SHALL BE CONSTRUCTED IN THE PROPOSED AND EXISTING SHOULDERS OF THE LOCAL AND EXPRESS LANES ACCORDING TO IDOT STANDARD 642001.
3. TYPICAL SECTIONS NEED TO BE VERIFIED WITH THE ROADWAY PLANS AS THEY ARE A REPRESENTATION OF THE PLANS. THEY DO NOT SHOW ALL CONFIGURATIONS, JUST THE MOST PREDOMINANT.
4. THE SLOPE OF THE STABILIZED SU-BASE 4½" UNDER THE SHOULDERS AND CURB AND GUTTER SHALL MATCH THE SLOPE OF THE ADJACENT PAVEMENT IN THE NORMAL CROWNED AREAS. △1

** SEE PLAN SHEETS FOR DETAILS

BOWMAN, BARRETT & ASSOCIATES INC.
CONSULTING ENGINEERS
Chicago, Illinois
312.228.0100
www.bbandainc.com

REVISIONS		
	NAME	DATE
△1	ADDENDUM 1	7/28/06

ILLINOIS DEPARTMENT OF TRANSPORTATION
F.A.I. 94/90 (DAN RYAN EXPRESSWAY)
GARFIELD BLVD TO 31ST STREET (NB LOCAL LANES)

PROPOSED TYPICAL SECTIONS

SCALE: NTS | DRAWN BY: JDC
DATE: 06/09/06 | CHECKED BY: RS

N:\660\add\ol\INS\SHEETS\660_1867SOD.dgn 7/28/2006 12:42:09 PM

F.A.I.	SECTION	COUNTY	TOTAL SHEETS	SHEET NO.
94/90	*	COOK	565	27
STA.		TO STA.		
FED. ROAD DIST. NO.	ILLINOIS	FED. AID PROJECT		
62301	*(2021-922 PT2 ETC 2324.6-1P) R-10			

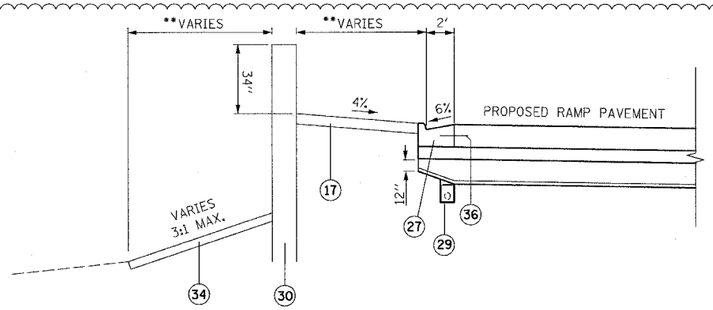

PROPOSED TYPICAL INSIDE RAMP SHOULDER TREATMENT WITH RETAINING WALL

RAMP		STATION
47B	-	6059+26 TO 6063+10.3
43D	-	8056+05 TO 8059+16.5

(INVERT RAMP 43D GUTTER FLAG 2% ONTO RAMP PAVEMENT FROM STA 8058+60.36 TO FRONTAGE ROAD CURB AND GUTTER)

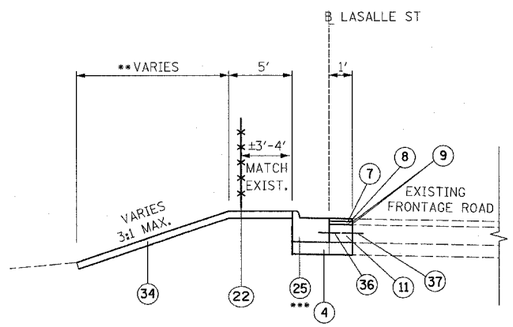

PROPOSED FRONTAGE ROAD C&G RECONSTRUCTION

STA. 219+97 TO 221+23

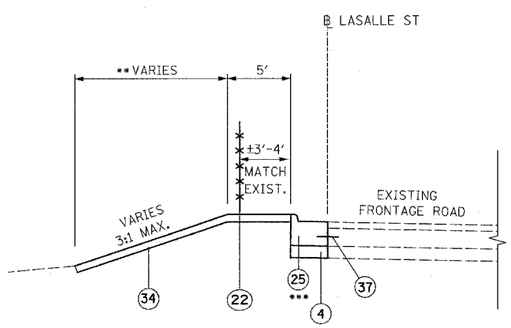

PROPOSED FRONTAGE ROAD PAVEMENT REDUCTION

STA. 215+94.3 TO 219+97

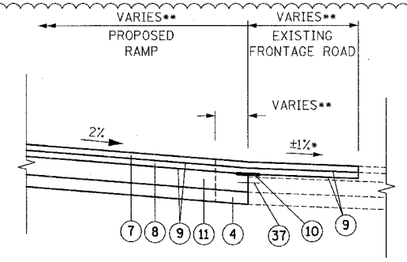

FRONTAGE ROAD RAMP TERMINAL

RAMP		STATION
47B	-	213+31.28 TO 214+52.22
43D	-	235+81.05 TO 237+14.07
43B	-	239+07.02 TO 239+96.74
39C	-	(SEE "PROPOSED FRONTAGE ROAD PARTIAL RECONSTRUCTION")

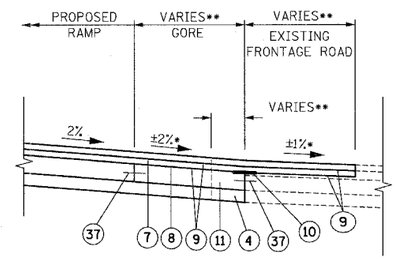

FRONTAGE ROAD RAMP GORE

RAMP		STATION
47B	-	214+52.40 TO 215+46.10
43D	-	235+27.16 TO 235+81.05
43B	-	239+96.74 TO 240+67.31
39C	-	261+75.08 TO 262+39.81

NOTES:

1. SEE ROADWAY DETAILS FOR VARIABLE HEIGHT OF THE DOUBLE FACE BARRIER WALL AND FOR THE TYING OF THE BARRIER BASE TO THE PCC SHOULDER AND FOR THE LIMITS OF CONSTRUCTION OF THE SUB-BASE GRANULAR MATERIAL UNDER THE DOUBLE FACE BARRIER WALL.
2. SHOULDER RUMBLE STRIPS SHALL BE CONSTRUCTED IN THE PROPOSED AND EXISTING SHOULDERS OF THE LOCAL AND EXPRESS LANES ACCORDING TO IDOT STANDARD 642001.
3. TYPICAL SECTIONS NEED TO BE VERIFIED WITH THE ROADWAY PLANS AS THEY ARE A REPRESENTATION OF THE PLANS. THEY DO NOT SHOW ALL CONFIGURATIONS, JUST THE MOST PREDOMINANT.
4. THE SLOPE OF THE STABILIZED SU-BASE 4½" UNDER THE SHOULDERS AND CURB AND GUTTER SHALL MATCH THE SLOPE OF THE ADJACENT PAVEMENT IN THE NORMAL CROWNED AREAS.

** SEE PLAN SHEETS FOR DETAILS

*** SLOPE PROPOSED FRONTAGE ROAD GUTTER TO MATCH EXISTING SLOPES OF GUTTERS THAT ARE BEING REPLACED (INCLUDED IN THE COST OF CURB AND GUTTER)

PROPOSED LEGEND

1. CONTINUOUSLY REINFORCED PORTLAND CEMENT CONCRETE PAVEMENT 14" AND PAVEMENT REINFORCEMENT 14"
2. NOT USED
3. STABILIZED SUB-BASE 4½"
4. SUB-BASE GRANULAR MATERIAL, TYPE B 6"
5. SUB-BASE GRANULAR MATERIAL, TYPE B 24"
6. GEOTECHNICAL FABRIC FOR GROUND STABILIZATION
7. BITUMINOUS CONCRETE SURFACE COURSE, SUPERPAVE, MIX "D" N70, 1½"
8. POLYMERIZED LEVELING BINDER (MACHINE METHOD), SUPERPAVE, IL-4.75, N50, 1"
9. BITUMINOUS MATERIALS (PRIME COAT)
10. STRIP REFLECTIVE CRACK CONTROL TREATMENT
11. PORTLAND CEMENT CONCRETE BASE COURSE 9½"
12. PORTLAND CEMENT CONCRETE PAVEMENT 11" (JOINTED)
13. PORTLAND CEMENT CONCRETE SHOULDERS 11"
14. EXCAVATE AND PLACE EXISTING GRANULAR MATERIAL
15. PORTLAND CEMENT CONCRETE SHOULDERS 14" (& VAR.)
16. CONCRETE GUTTER, TYPE B
17. CONCRETE MEDIAN SURFACE, 5" (MODIFIED)
18. CONCRETE MEDIAN SURFACE, 6" (SPECIAL)
19. CONCRETE MEDIAN SURFACE, 6"
20. CONCRETE BARRIER, DOUBLE FACE, 32" HEIGHT
21. CONCRETE BARRIER, SINGLE FACE, 32" HEIGHT
22. CHAIN LINK FENCE, 4' (SPECIAL)
23. BARRIER BASE
24. BARRIER WALL MARKERS, TYPE C (80' C-C)
25. COMBINATION CONCRETE CURB AND GUTTER, TYPE B-6.12
26. COMBINATION CONCRETE CURB AND GUTTER, TYPE M-2.24
27. COMBINATION CONCRETE CURB AND GUTTER, TYPE M-4.24
28. COMBINATION CONCRETE CURB AND GUTTER, TYPE M-4.48 (MODIFIED)
29. PIPE UNDERDRAINS 6"
30. RETAINING WALL
31. MODIFIED EXISTING RETAINING WALL
32. SAND BACKFILL
33. GUARDRAIL
34. TOPSOIL FURNISH AND PLACE / SEEDING (SEE LANDSCAPING PLANS FOR DETAILS)
35. LONGITUDINAL SAWED OR CONSTRUCTION JOINT. FOR LONGITUDINAL SAWED JOINT, POUR IN PLACE NO. 6 DEFORMED EPOXY TIE BARS 30" LONG AT 30" C-C. FOR LONGITUDINAL CONSTRUCTION JOINT, DRILL AND GROUT NO. 8 DEFORMED EPOXY TIE BARS 24" LONG AT 24" C-C. (SHALL BE INCLUDED IN THE COST OF C.R.P.C.C. PAVEMENT 14")
36. LONGITUDINAL CONSTRUCTION JOINT. DRILL AND GROUT NO. 6 DEFORMED EPOXY TIE BARS 24" LONG AT 24" C-C. (SHALL BE INCLUDED IN THE COST OF THE APPLICABLE COMB. CONC. CURB AND GUTTER TYPE)
37. LONGITUDINAL CONSTRUCTION JOINT. DRILL AND GROUT NO. 8 DEFORMED EPOXY TIE BARS 24" LONG AT 24" C-C. (SHALL BE INCLUDED IN THE COST OF P.C.C. BASE COURSE 9")
38. LONGITUDINAL CONSTRUCTION JOINT. DRILL AND GROUT NO. 8 DEFORMED EPOXY TIE BARS 30" LONG AT 24" C-C. (SHALL BE INCLUDED IN THE COST OF THE APPLICABLE P.C.C. SHOULDER TYPE)
39. SUB-BASE GRANULAR MATERIAL, TYPE B 12"

PRTYP-8

BOWMAN, BARRETT & ASSOCIATES INC.
CONSULTING ENGINEERS
Chicago, Illinois
312.228.0100
www.bbandainc.com

REVISIONS	
NAME	DATE
ADDENDUM 1	7/28/06

ILLINOIS DEPARTMENT OF TRANSPORTATION

F.A.I. 94/90 (DAN RYAN EXPRESSWAY)

GARFIELD BLVD TO 31ST STREET (NB LOCAL LANES)

PROPOSED TYPICAL SECTIONS

SCALE: NTS — DRAWN BY: JDC

DATE: 06/09/06 — CHECKED BY: RS

N:\660\add\chl\NB\SHEET\S660_IBCT S00.dgn

7/28/2006 12:44:00 PM

F.A.I.	SECTION	COUNTY	TOTAL SHEETS	SHEET NO.
94/90 *		COOK	565	28
STA.		TO STA.		
FED. ROAD DIST. NO.	ILLINOIS	FED. AID PROJECT		
62301	*(2021-922 PT2 ETC 2324.6-1P) R-10			

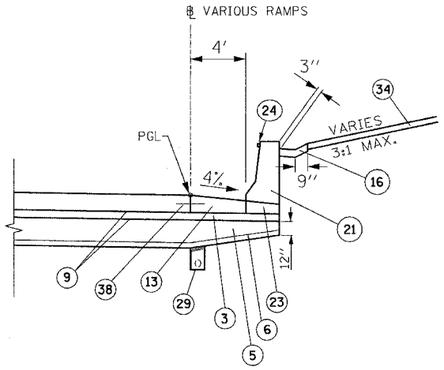

EARTH RETAINING RAMP BARRIER WALL

RAMP		STATION
43D	-	8051+00.00 TO 8058+24.98
T35C	-	8022+78.44 TO 8024+43.44
35B	-	6004+13.86 TO 6006+98.87
31C	-	8002+55.49 TO 8004+20.56

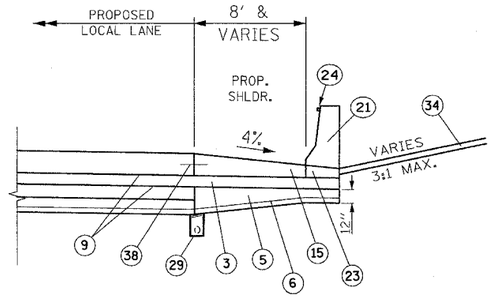

LOCAL LANE BARRIER WALL

STA. 4576+63 TO 4577+59

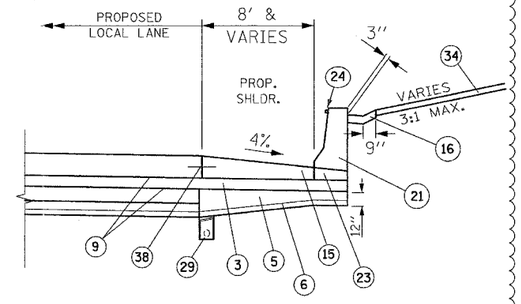

EARTH RETAINING LOCAL LANE BARRIER WALL

STA 4529+65.59 TO 4535+98.41
STA. 4545+39.98 TO 4545+64.00
STA. 4583+26.09 TO 4585+20.73
STA. 4618+96.22 TO 4622+22.14
STA. 4623+09.24 TO 4626+74.25

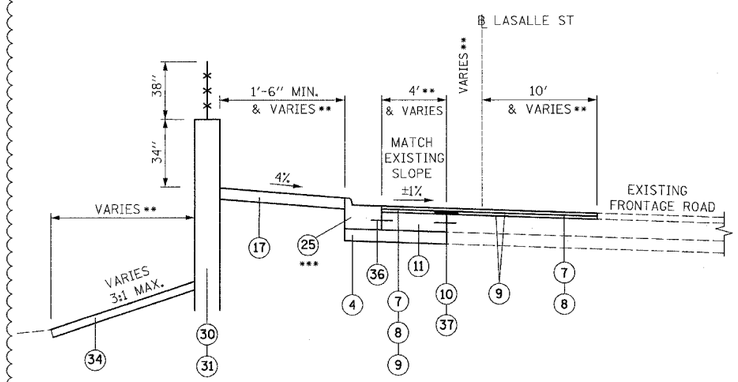

PROPOSED FRONTAGE ROAD PARTIAL RECONSTRUCTION WITH RETAINING WALL

STA. 211+39.8 TO 214+49.4
STA. 241+03.2 TO 245+35.2

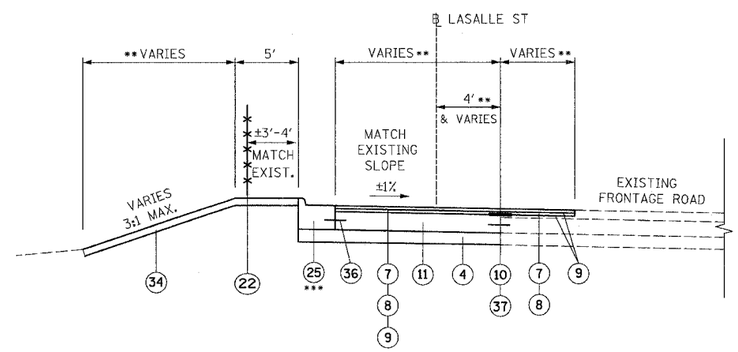

PROPOSED FRONTAGE ROAD PARTIAL RECONSTRUCTION

STA. 215+46.10 TO 215+94.30
STA 233+15.00 TO 237+96.80
STA. 238+65.48 TO 239+07.02
STA. 245+35.18 TO 245+43.18
STA. 260+85.60 TO 261+75.08
STA. 262+39.81 TO 264+14.99

PROPOSED LEGEND

1. CONTINUOUSLY REINFORCED PORTLAND CEMENT CONCRETE PAVEMENT 14" AND PAVEMENT REINFORCEMENT 14"
2. NOT USED
3. STABILIZED SUB-BASE 4½" △1
4. SUB-BASE GRANULAR MATERIAL, TYPE B 6"
5. SUB-BASE GRANULAR MATERIAL, TYPE B 24"
6. GEOTECHNICAL FABRIC FOR GROUND STABILIZATION
7. BITUMINOUS CONCRETE SURFACE COURSE, SUPERPAVE, MIX "D" N70, 1½"
8. POLYMERIZED LEVELING BINDER (MACHINE METHOD), SUPERPAVE, IL-4.75, N50, 1"
9. BITUMINOUS MATERIALS (PRIME COAT)
10. STRIP REFLECTIVE CRACK CONTROL TREATMENT
11. PORTLAND CEMENT CONCRETE BASE COURSE 9½"
12. PORTLAND CEMENT CONCRETE PAVEMENT 11" (JOINTED)
13. PORTLAND CEMENT CONCRETE SHOULDERS 11"
14. EXCAVATE AND PLACE EXISTING GRANULAR MATERIAL △1
15. PORTLAND CEMENT CONCRETE SHOULDERS 14" (& VAR)
16. CONCRETE GUTTER, TYPE B
17. CONCRETE MEDIAN SURFACE, 5" (MODIFIED)
18. CONCRETE MEDIAN SURFACE, 6" (SPECIAL)
19. CONCRETE MEDIAN SURFACE, 6"
20. CONCRETE BARRIER, DOUBLE FACE, 32" HEIGHT
21. CONCRETE BARRIER, SINGLE FACE, 32" HEIGHT
22. CHAIN LINK FENCE, 4' (SPECIAL)
23. BARRIER BASE
24. BARRIER WALL MARKERS, TYPE C (80' C-C)
25. COMBINATION CONCRETE CURB AND GUTTER, TYPE B-6.12
26. COMBINATION CONCRETE CURB AND GUTTER, TYPE M-2.24
27. COMBINATION CONCRETE CURB AND GUTTER, TYPE M-4.24
28. COMBINATION CONCRETE CURB AND GUTTER, TYPE M-4.48 (MODIFIED)
29. PIPE UNDERDRAINS 6"
30. RETAINING WALL
31. MODIFIED EXISTING RETAINING WALL
32. SAND BACKFILL
33. GUARDRAIL
34. TOPSOIL FURNISH AND PLACE △1 SEEDING (SEE LANDSCAPING PLANS FOR DETAILS)
35. LONGITUDINAL SAWED OR CONSTRUCTION JOINT. FOR LONGITUDINAL SAWED JOINT, POUR IN PLACE NO. 6 DEFORMED EPOXY TIE BARS 30" LONG AT 30" C-C. FOR LONGITUDINAL CONSTRUCTION JOINT, DRILL AND GROUT NO. 8 DEFORMED EPOXY TIE BARS 24" LONG AT 24" C-C. (SHALL BE INCLUDED IN THE COST OF C.R.P.C.C. PAVEMENT 14")
36. LONGITUDINAL CONSTRUCTION JOINT. DRILL AND GROUT NO. 6 DEFORMED EPOXY TIE BARS 24" LONG AT 24" C-C. (SHALL BE INCLUDED IN THE COST OF THE APPLICABLE COMB. CONC. CURB AND GUTTER TYPE)
37. LONGITUDINAL CONSTRUCTION JOINT. DRILL AND GROUT NO. 8 DEFORMED EPOXY TIE BARS 24" LONG AT 24" C-C. (SHALL BE INCLUDED IN THE COST OF P.C.C. BASE COURSE 9")
38. LONGITUDINAL CONSTRUCTION JOINT. DRILL AND GROUT NO. 8 DEFORMED EPOXY TIE BARS 30" LONG AT 24" C-C. (SHALL BE INCLUDED IN THE COST OF THE APPLICABLE P.C.C. SHOULDER TYPE) △1
39. SUB-BASE GRANULAR MATERIAL, TYPE B 12" △1

PRTYP-9

NOTES:

1. SEE ROADWAY DETAILS FOR VARIABLE HEIGHT OF THE DOUBLE FACE BARRIER WALL AND FOR THE TYING OF THE BARRIER BASE TO THE PCC SHOULDER AND FOR THE LIMITS OF CONSTRUCTION OF THE SUB-BASE GRANULAR MATERIAL UNDER THE DOUBLE FACE BARRIER WALL.
2. SHOULDER RUMBLE STRIPS SHALL BE CONSTRUCTED IN THE PROPOSED AND EXISTING SHOULDERS OF THE LOCAL AND EXPRESS LANES ACCORDING TO IDOT STANDARD 642001.
3. TYPICAL SECTIONS NEED TO BE VERIFIED WITH THE ROADWAY PLANS AS THEY ARE A REPRESENTATION OF THE PLANS. THEY DO NOT SHOW ALL CONFIGURATIONS, JUST THE MOST PREDOMINANT.
4. △1 THE SLOPE OF THE STABILIZED SU-BASE 4½" UNDER THE SHOULDERS AND CURB AND GUTTER SHALL MATCH THE SLOPE OF THE ADJACENT PAVEMENT IN THE NORMAL CROWNED AREAS.

** SEE PLAN SHEETS FOR DETAILS

*** SLOPE PROPOSED FRONTAGE ROAD GUTTER TO MATCH EXISTING SLOPES OF GUTTERS THAT ARE BEING REPLACED (INCLUDED IN THE COST OF CURB AND GUTTER)

BOWMAN, BARRETT & ASSOCIATES INC.
CONSULTING ENGINEERS
Chicago, Illinois
312.228.0100
www.bbandainc.com

REVISIONS		
	NAME	DATE
△1	ADDENDUM 1	7/28/06

ILLINOIS DEPARTMENT OF TRANSPORTATION

F.A.I. 94/90 (DAN RYAN EXPRESSWAY)

GARFIELD BLVD TO 31ST STREET (NB LOCAL LANES)

PROPOSED TYPICAL SECTIONS

SCALE: NTS | DRAWN BY: JDC

DATE: 06/09/06 | CHECKED BY: RS

N:\660\oasis\civil\NB\SHEETS\660_1867_500.dgn 7/28/2006 1:47:32 PM

F.A.I.	SECTION	COUNTY	TOTAL SHEETS	SHEET NO.
94/90	*	COOK	565	29
STA.		TO STA.		
FED. ROAD DIST. NO.	ILLINOIS	FED. AID PROJECT		
62301	*(2021-922 PT2 ETC 2324.6-1P) R-10			

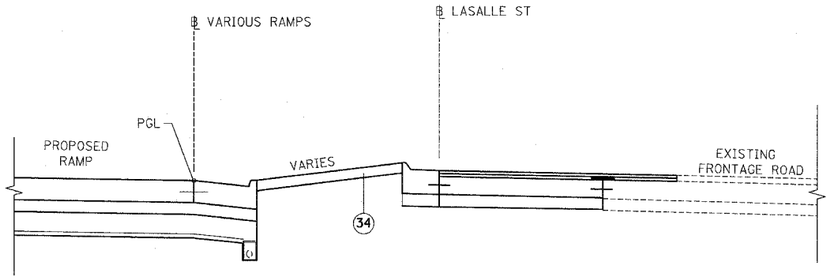

PROPOSED UPPER RAMP GROUND TREATMENT

RAMPS: 47B, 43D, 39C

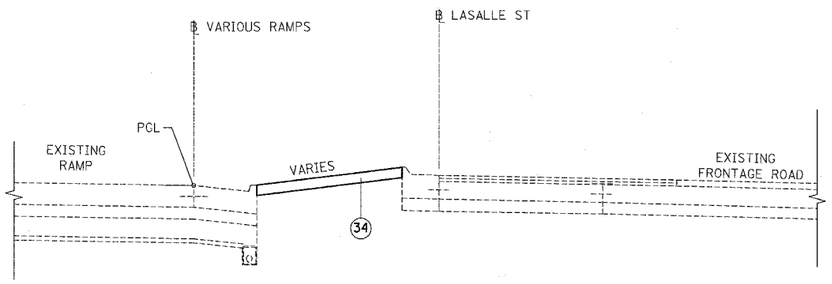

PROPOSED UPPER RAMP GROUND TREATMENT

RAMPS: T35C, T39B, 35B, 31C

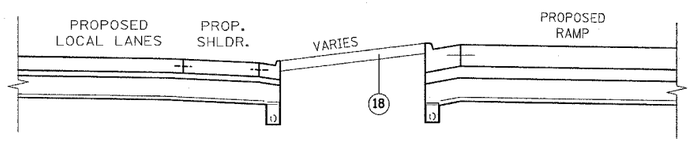

PROPOSED LOWER RAMP GROUND TREATMENT

RAMPS: 47B, 43D, 43B, 39C, T35C, T39B, 35B

NOTES:

1. SEE ROADWAY DETAILS FOR VARIABLE HEIGHT OF THE DOUBLE FACE BARRIER WALL AND FOR THE TYING OF THE BARRIER BASE TO THE PCC SHOULDER AND FOR THE LIMITS OF CONSTRUCTION OF THE SUB-BASE GRANULAR MATERIAL UNDER THE DOUBLE FACE BARRIER WALL.
2. SHOULDER RUMBLE STRIPS SHALL BE CONSTRUCTED IN THE PROPOSED AND EXISTING SHOULDERS OF THE LOCAL AND EXPRESS LANES ACCORDING TO IDOT STANDARD 642001.
3. TYPICAL SECTIONS NEED TO BE VERIFIED WITH THE ROADWAY PLANS AS THEY ARE A REPRESENTATION OF THE PLANS. THEY DO NOT SHOW ALL CONFIGURATIONS, JUST THE MOST PREDOMINANT.
4. THE SLOPE OF THE STABILIZED SU-BASE 4½" UNDER THE SHOULDERS AND CURB AND GUTTER SHALL MATCH THE SLOPE OF THE ADJACENT PAVEMENT IN THE NORMAL CROWNED AREAS. △1

** SEE PLAN SHEETS FOR DETAILS

PROPOSED LEGEND

1. CONTINUOUSLY REINFORCED PORTLAND CEMENT CONCRETE PAVEMENT 14" AND PAVEMENT REINFORCEMENT 14"
2. NOT USED
3. STABILIZED SUB-BASE 4½" △1
4. SUB-BASE GRANULAR MATERIAL, TYPE B 6"
5. SUB-BASE GRANULAR MATERIAL, TYPE B 24"
6. GEOTECHNICAL FABRIC FOR GROUND STABILIZATION
7. BITUMINOUS CONCRETE SURFACE COURSE, SUPERPAVE, MIX "D" N70, 1½"
8. POLYMERIZED LEVELING BINDER (MACHINE METHOD), SUPERPAVE, IL-4.75, N50, 1"
9. BITUMINOUS MATERIALS (PRIME COAT)
10. STRIP REFLECTIVE CRACK CONTROL TREATMENT
11. PORTLAND CEMENT CONCRETE BASE COURSE 9½"
12. PORTLAND CEMENT CONCRETE PAVEMENT 11" (JOINTED)
13. PORTLAND CEMENT CONCRETE SHOULDERS 11"
14. EXCAVATE AND PLACE EXISTING GRANULAR MATERIAL △1
15. PORTLAND CEMENT CONCRETE SHOULDERS 14" (& VAR)
16. CONCRETE GUTTER, TYPE B
17. CONCRETE MEDIAN SURFACE, 5" (MODIFIED)
18. CONCRETE MEDIAN SURFACE, 6" (SPECIAL)
19. CONCRETE MEDIAN SURFACE, 6"
20. CONCRETE BARRIER, DOUBLE FACE, 32" HEIGHT
21. CONCRETE BARRIER, SINGLE FACE, 32" HEIGHT
22. CHAIN LINK FENCE, 4' (SPECIAL)
23. BARRIER BASE
24. BARRIER WALL MARKERS, TYPE C (80' C-C)
25. COMBINATION CONCRETE CURB AND GUTTER, TYPE B-6.12
26. COMBINATION CONCRETE CURB AND GUTTER, TYPE M-2.24
27. COMBINATION CONCRETE CURB AND GUTTER, TYPE M-4.24
28. COMBINATION CONCRETE CURB AND GUTTER, TYPE M-4.48 (MODIFIED)
29. PIPE UNDERDRAINS 6"
30. RETAINING WALL
31. MODIFIED EXISTING RETAINING WALL
32. SAND BACKFILL
33. GUARDRAIL
34. TOPSOIL FURNISH AND PLACE △1 SEEDING (SEE LANDSCAPING PLANS FOR DETAILS)
35. LONGITUDINAL SAWED OR CONSTRUCTION JOINT. FOR LONGITUDINAL SAWED JOINT, POUR IN PLACE NO. 6 DEFORMED EPOXY TIE BARS 30" LONG AT 30" C-C. FOR LONGITUDINAL CONSTRUCTION JOINT, DRILL AND GROUT NO. 8 DEFORMED EPOXY TIE BARS 24" LONG AT 24" C-C. (SHALL BE INCLUDED IN THE COST OF C.R.P.C.C. PAVEMENT 14")
36. LONGITUDINAL CONSTRUCTION JOINT. DRILL AND GROUT NO. 6 DEFORMED EPOXY TIE BARS 24" LONG AT 24" C-C. (SHALL BE INCLUDED IN THE COST OF THE APPLICABLE COMB. CONC. CURB AND GUTTER TYPE)
37. LONGITUDINAL CONSTRUCTION JOINT. DRILL AND GROUT NO. 8 DEFORMED EPOXY TIE BARS 24" LONG AT 24" C-C. (SHALL BE INCLUDED IN THE COST OF P.C.C. BASE COURSE 9")
38. LONGITUDINAL CONSTRUCTION JOINT. DRILL AND GROUT NO. 8 DEFORMED EPOXY TIE BARS 30" LONG AT 24" C-C. (SHALL BE INCLUDED IN THE COST OF THE APPLICABLE P.C.C. SHOULDER TYPE) △1
39. SUB-BASE GRANULAR MATERIAL, TYPE B 12" △1

PRTYP-10

BOWMAN, BARRETT & ASSOCIATES INC.
CONSULTING ENGINEERS
Chicago, Illinois
312.228.0100
www.bbandainc.com

REVISIONS		
	NAME	DATE
△1	ADDENDUM 1	7/28/06

ILLINOIS DEPARTMENT OF TRANSPORTATION

F.A.I. 94/90 (DAN RYAN EXPRESSWAY)

GARFIELD BLVD TO 31ST STREET (NB LOCAL LANES)

PROPOSED TYPICAL SECTIONS

SCALE: NTS — DRAWN BY: JDC

DATE: 06/09/06 — CHECKED BY: RS

F.A.I. RTE.	SECTION	COUNTY	TOTAL SHEETS	SHEET NO.
90/94	*	COOK	565	30
STA.		TO STA.		
FED. ROAD DIST. NO. 1	ILLINOIS	FED. AID PROJECT		

62301 * (2021-922 PT2 ETC 2324.6-1P) R-10

ROADWAY REMOVAL SCHEDULE

STATION TO STATION	TREE REMOVAL (6 TO 15 UNITS DIAMETER)	TREE REMOVAL (OVER 15 UNITS DIAMETER)	BITUMINOUS SURFACE REMOVAL 2-1/2"	PAVEMENT REMOVAL	COMBINATION CURB AND GUTTER REMOVAL	CONCRETE BARRIER REMOVAL	MEDIAN REMOVAL	PAVED SHOULDER REMOVAL	GUARDRAIL REMOVAL	TEMPORARY CONCRETE BARRIER REMOVAL	LUG SYSTEM REMOVAL	IMPACT ATTENUATOR REMOVAL
	UNIT	UNIT	SQ YD	SQ YD	FOOT	FOOT	SQ FT	SQ YD	FOOT	FOOT	EACH	EACH
4474+50.00 TO 4480+00.00	-	-	-	2,610	1,100	25	-	-	-	440	-	-
4480+00.00 TO 4492+00.00	-	-	-	6,516	2,400	18	-	78	215	1,176	-	-
4492+00.00 TO 4504+00.00	-	-	-	5,836	2,401	34	-	74	181	1,061	-	-
4504+00.00 TO 4516+00.00	-	-	-	8,581	1,622	-	-	5	-	1,200	-	1
4516+00.00 TO 4529+00.00	-	-	-	8,635	1,257	106	-	170	331	400	-	-
4529+00.00 TO 4541+00.00	58	154	716	9,443	3,664	-	3,523	1,255	416	0	-	-
4541+00.00 TO 4533+00.00	9	100	199	9,670	2,656	28	771	922	208	997	-	1
4533+00.00 TO 4565+00.00	343	220	1,090	10,034	3,964	27	3,867	101	288	1,100	-	-
4565+00.00 TO 4577+00.00	392	208	-	9,141	3,524	86	161	1,194	430	1,312	-	-
4577+00.00 TO 4589+00.00	56	19	366	9,168	3,284	15	1,973	63	207	1,504	2	-
4589+00.00 TO 4601+00.00	-	-	-	8,121	3,249	24	-	771	134	1,277	-	-
4601+00.00 TO 4613+00.00	-	-	-	8,374	2,313	17	-	94	256	1,108	-	-
4613+00.00 TO 4625+00.00	-	-	-	8,547	2,898	17	-	486	220	1,330	-	-
4625+00.00 TO 4637+00.00	-	-	-	9,171	2,407	23	-	84	219	1,106	-	1
4637+00.00 TO 4638+05.00	-	-	-	1,150	158	-	-	-	-	456	2	-
TOTALS	858	701	2,371	114,998	36,897	419	10,297	5,297	3,104	14,466	4	3

MEDIAN SCHEDULE

STATION TO STATION	CONCRETE MEDIAN SURFACE' 6" (SPECIAL)	CONCRETE MEDIAN SURFACE 5 INCH (MODIFIED)
	SQ FT	SQ FT
4474+50.00 TO 4480+00.00	341	-
4480+00.00 TO 4492+00.00	711	-
4492+00.00 TO 4504+00.00	789	-
4504+00.00 TO 4516+00.00	2 773	-
4516+00.00 TO 4529+00.00	368	-
4529+00.00 TO 4541+00.00	646	1,973
4541+00.00 TO 4533+00.00	1,661	676
4533+00.00 TO 4565+00.00	1,424	1,519
4565+00.00 TO 4577+00.00	2,704	-
4577+00.00 TO 4589+00.00	789	-
4589+00.00 TO 4601+00.00	104	-
4601+00.00 TO 4613+00.00	943	-
4613+00.00 TO 4625+00.00	96	-
4625+00.00 TO 4637+00.00	997	-
4637+00.00 TO 4638+05.00	-	-
TOTALS	12,346	4,168

2

LANDSCAPING SCHEDULE

STATION TO STATION	TOPSOIL FURNISH AND PLACE, 4"	TOPSOIL FURNISH AND PLACE, 12"	COMPOST FURNISH AND PLACE, 6"	SEEDING CLASS 2A	SEEDING CLASS 4 (MODIFIED)	SEEDING CLASS 5A (MODIFIED)	NITROGEN FERTILIZER NUTRIENTS	PHOSPHOROUS FERTILIZER NUTRIENTS	POTASSIUM FERTILIZER NUTRIENTS	EROSION CONTROL BLANKET	SUPPLEMENTAL WATERING	WEED CONTROL
	SQ YD	SQ YD	SQ YD	ACRE	ACRE	ACRE	POUND	POUND	POUND	SQ YD	UNIT	POUND
4474+50.00 TO 4482+00.00	0	272	272	0.06	-	-	6	6	6	272	6.6	-
4482+00.00 TO 4506+00.00	410	1,973	1,973	0.47	-	-	45	44	43	2,383	57.2	3.0
4506+00.00 TO 4529+00.00	4,276	4,081	4,081	1.24	0.45	0.45	156	154	153	8,357	200.6	5.0
4529+00.00 TO 4553+00.00	6,107	3,229	3,229	1.44	0.50	0.50	174	174	174	9,336	225.0	5.0
4553+00.00 TO 4577+00.00	7,515	6,611	6,611	1.56	1.37	1.37	263	263	263	14,126	340.0	1.4
4577+00.00 TO 4601+00.00	6,388	6,835	6,835	2.22	0.52	0.52	246	246	246	13,223	317.0	0.2
4601+00.00 TO 4625+00.00	3,845	8,253	8,253	2.50	-	-	225	225	225	12,098	290.0	1.0
4625+00.00 TO 4638+05.00	2,183	1,735	1,735	0.81	-	-	73	73	73	3,918	95.0	0.4
TOTALS	30,724	32,989	32,989	10.30	2.84	2.84	1,188	1,185	1,183	63,713	1,531.4	16.0

SCH-1

REVISIONS	
NAME	DATE
2 ADDENDUM 2	8/07/06

ILLINOIS DEPARTMENT OF TRANSPORTATION
F.A.I. 90/94 (DAN RYAN EXPRESSWAY)
GARFIELD BLVD TO 31ST STREET (NB LOCAL LANES)

SCHEDULE OF QUANTITIES

SCALE: NONE DRAWN BY: NJH
DATE: June 9, 2006 CHECKED BY: RMG

CTE | AECOM

P:\P40468\activ\18-ctrls 18 & 19\sht\ctrl 19\schedules\sch9201r2.dgn 8/8/2006 3:34:17 PM

F.A.I. RTE.	SECTION	COUNTY	TOTAL SHEETS	SHEET NO.
90/94	*	COOK	565	31
STA.		TO STA.		
FED. ROAD DIST. NO. 1	ILLINOIS	FED. AID PROJECT		

62301 * (2021-922 PT2 ETC 2324.6-1P) R-10

ROADWAY ITEMS SCHEDULE

STATION TO STATION	ROCK EXCAVATION	GEOTECHNICAL FABRIC FOR GROUND STABILIZATION	SUB-BASE GRANULAR MATERIAL, TYPE B, 12"	SUB-BASE GRANULAR MATERIAL, TYPE B, 24"	STABILIZED SUB-BASE, 4 1/2"	P.C.C. BASE COURSE 9-1/2"	CONTINUOUSLY REINFORCED PORTLAND CEMENT CONC. PAVEMENT, 14"	PCC PAVEMENT 11" (JOINTED)	PCC SHOULDERS 11"	SHOULDER RUMBLE STRIP	BITUMINOUS CONCRETE SURFACE COURSE, SUPERPAVE, MIX "D", N70 (1-1/2")	POLYMERIZED LEVELING BINDER (MACHINE METHOD), SUPERPAVE, IL-4.75, N50 (1")	PCC SHOULDERS 14"	STABILIZED SUB-BASE, 6"	PAVEMENT REINFORCEMENT, 14"	BITUMINOUS MATERIALS (PRIME COAT)	AGGREGATE (PRIME COAT)
	CU YD	SQ YD	SQ YD	SQ YD	SQ YD	SQ YD	SQ YD	SQ YD	SQ YD	FOOT	TON	TON	SQ YD	SQ YD	SQ YD	TON	TON
4474+50.00 TO 4480+00.00	-	3,055	2,322	733	3,055	-	2,323	-	-	2,200	-	-	502		2,323	1.3	6.2
4480+00.00 TO 4492+00.00	-	7,703	5,942	1,761	7,703	-	5,942	-	-	4,349	-	-	1,190		5,942	3.1	15.5
4492+00.00 TO 4504+00.00	-	7,319	5,539	1,780	7,319	-	5,539	-	-	4,151	-	-	1,007		5,539	3.0	14.7
4504+00.00 TO 4516+00.00	-	9,242	7,137	2,105	9,242	-	7,137	-	-	4,097	-	-	1,307		7,137	3.7	18.5
4516+00.00 TO 4529+00.00	217	9,249	6,942	2,307	9,249		6,942	-	-	5,289	-	-	1,870		6,942	3.8	18.6
4529+00.00 TO 4541+00.00	-	11,809	7,568	4,241	11,809	512	7,568	1,270	-	4,142	99	66	2,289		7,568	25.7	3.6
4541+00.00 TO 4533+00.00	-	10,616	7,051	3,565	10,616	79	7,051	926	220	3,506	23	16	1,534		7,051	22.7	0.9
4533+00.00 TO 4565+00.00	-	9,458	5,117	4,342	9,458	1,114	5,117	1,173	46	4,638	185	123	2,065		5,117	21.2	6.7
4565+00.00 TO 4577+00.00	-	10,093	6,714	3,379	10,093	-	6,714	762	78	4,313	-	0	1,610		6,714	21.4	0.0
4577+00.00 TO 4589+00.00	-	9,185	5,380	3,815	9,185	650	5,370	803	73	4,427	85	57	2,056		5,370	20.0	3.1
4589+00.00 TO 4601+00.00	-	8,055	5,076	2,989	8,055	-	5,067	144	-	4,769	-	0	2,093		5,067	17.1	0.0
4601+00.00 TO 4613+00.00	-	8,608	5,913	2,694	8,608	-	5,913	335	-	4,530	-	0	1,574		5,913	18.3	0.0
4613+00.00 TO 4625+00.00	-	9,281	5,765	3,516	9,281	-	5,765	507	127	4,445	-	0	2,219		5,765	19.7	0.0
4625+00.00 TO 4637+00.00	-	10,230	6,787	3,443	10,230	-	6,787	294	73	4,481	-	0	2,451		6,787	21.7	0.0
4637+00.00 TO 4638+05.00	-	1,323	667	654	1,323	-	667	-	-	1,122	-	0	489		667	2.9	0.0
TOTALS	217	125,226	83,920	41,324	125,226	2,355	83,902	6,214	616	60,458	392	262	24,255	0	83,902	205.6	87.8

CURB AND GUTTER SCHEDULE

STATION TO STATION	CONCRETE GUTTER, TYPE B	COMBINATION CONCRETE CURB & GUTTER, TYPE B-6.12	COMBINATION CONCRETE CURB & GUTTER, TYPE M-2.24	COMBINATION CONCRETE CURB & GUTTER, TYPE M-4.48 (MODIFIED)	COMBINATION CONCRETE CURB & GUTTER, TYPE M-4.24
	FOOT	FOOT	FOOT	FOOT	FOOT
4474+50.00 TO 4480+00.00	-	-	-	-	313
4480+00.00 TO 4492+00.00	-	-	-	450	-
4492+00.00 TO 4504+00.00	-	-	300	599	130
4504+00.00 TO 4516+00.00	-	-	-	594	471
4516+00.00 TO 4529+00.00	-	-	139	-	914
4529+00.00 TO 4541+00.00	612	744	-	715	955
4541+00.00 TO 4533+00.00	809	178.5	241	123	953
4533+00.00 TO 4565+00.00	-	568	345	497	1,648
4565+00.00 TO 4577+00.00	-	-	402	598	617
4577+00.00 TO 4589+00.00	355	180	216	285	971
4589+00.00 TO 4601+00.00	-	-	-	81	1,221
4601+00.00 TO 4613+00.00	-	-	289	508	330
4613+00.00 TO 4625+00.00	833	-	-	-	428
4625+00.00 TO 4637+00.00	957	-	-	-	180
4637+00.00 TO 4638+05.00	-	-	-	-	105
TOTALS	3,566	1,671	1,932	4,450	9,236

EROSION CONTROL SCHEDULE

STATION TO STATION	SEDIMENT CONTROL, SILT FENCE	SEDIMENT CONTROL, SILT FENCE MAINTENANCE	INLET FILTERS	SEDIMENT CONTROL, DRAINAGE STRUCTURE INLET FILTER CLEANING	TEMPORARY EROSION CONTROL SEEDING	TEMPORARY DITCH CHECKS	MOWING
	FOOT	FOOT	EACH	EACH	POUND	EACH	ACRE
4474+50.00 TO 4482+00.00	189	48	15	30	186	-	0.06
4482+00.00 TO 4506+00.00	1,516	379	47	94	1,550	-	0.50
4506+00.00 TO 4529+00.00	1,922	481	47	94	5,394	8	1.74
4529+00.00 TO 4553+00.00	2,651	663	77	154	6,600	-	2.14
4553+00.00 TO 4577+00.00	2,702	676	77	154	8,858	-	2.84
4577+00.00 TO 4601+00.00	2,468	617	45	90	4,647	-	2.39
4601+00.00 TO 4625+00.00	2,240	560	72	144	2,216	-	2.44
4625+00.00 TO 4638+05.00	1,158	290	35	70	1,190	-	0.74
TOTALS	14,846	3,714	415	830	30,641	8	12.85

SCH-2

REVISIONS	
NAME	DATE
ADDENDUM 2	8/07/06

ILLINOIS DEPARTMENT OF TRANSPORTATION
F.A.I. 90/94 (DAN RYAN EXPRESSWAY)
GARFIELD BLVD TO 31ST STREET (NB LOCAL LANES)

SCHEDULE OF QUANTITIES

SCALE: NONE DRAWN BY: NJH
DATE: June 9, 2006 CHECKED BY: RMG

CTE | AECOM

p:\p40468\civil\8\ctrts 18 & 19\sht\ctrt 18\schedules\sch800220.sht 8/8/2006 3:34:12 PM

F.A.I. RTE.	SECTION	COUNTY	TOTAL SHEETS	SHEET NO.
90/94	*	COOK	565	32
STA.		TO STA.		
FED. ROAD DIST. NO. 1	ILLINOIS	FED. AID PROJECT		

62301 * (2021-922 PT2 ETC 2324.6-1P) R-10

SAFETY ITEMS SCHEDULE

STATION TO STATION	STEEL PLATE BEAM GUARD RAIL, TYPE A	TRAFFIC BARRIER TERMINAL, TYPE 2	TRAFFIC BARRIER TERMINAL, TYPE 6	TRAFFIC BARRIER TERMINAL, TYPE 1, SPECIAL (TANGENT)	TRAFFIC BARRIER TERMINAL TYPE 1, SPECIAL (FLARED)	CONCRETE BARRIER TRANSITION	GUARDRAIL MARKERS, TYPE A	BARRIER WALL MARKERS, TYPE C	TERMINAL MARKER, DIRECT APPLIED	BARRIER BASE	CONCRETE BARRIER SINGLE FACE, 32" HEIGHT	CONCRETE BARRIER DOUBLE FACE, 32" HEIGHT	CONCRETE BARRIER, SINGLE FACE, 32" HEIGHT (MODIFIED)	IMPACT ATTENUATOR (SEVERE USE, NARROW) TEST LEVEL 3	IMPACT ATTENUATORS (NON-REDIRECTIVE), TEST LEVEL 2
	FOOT	EACH	EACH	EACH	EACH	FOOT	EACH	EACH	EACH	FOOT	FOOT	FOOT	FOOT	EACH	EACH
4474+50.00 TO 4480+00.00	-	-	-	-	-	79	-	12	-	465	0	386	0	-	-
4480+00.00 TO 4492+00.00	-	-	-	-	-	0	-	29	-	1,148	0	1,148	0	-	-
4492+00.00 TO 4504+00.00	150.0	-	1	1	-	111	3	29	1	1,166	63	992	0	-	-
4504+00.00 TO 4516+00.00	-	-	-	-	-	66	-	30	-	1,192	0	1,126	0	1	-
4516+00.00 TO 4529+00.00	25.0	-	1	1	-	81	1	6	1	296	182	33	0	-	-
4529+00.00 TO 4541+00.00	-	-	-	0	0		-	9	0	711	610	0	101	-	-
4541+00.00 TO 4533+00.00	125	-	1	1	0	32	3	23	1	1,799	774	993	0	2	-
4533+00.00 TO 4565+00.00	225	-	1	2	0	77	5	16	2	1,200	0	1,050	73	1	-
4565+00.00 TO 4577+00.00	212.5	1	1	1	0	466	5	18	1	1,377	38	804	69	2	-
4577+00.00 TO 4589+00.00	100	-	1	1	0	138	2	20	1	1,537	374	939	86	-	-
4589+00.00 TO 4601+00.00	-	-	-	0	0	70	-	15	0	1,176	0	1,106	0	-	1
4601+00.00 TO 4613+00.00	175	-	1	1	0	56	4	15	1	1,200	0	1,068	76	-	-
4613+00.00 TO 4625+00.00	-	-	-	0	0	72	-	26	0	2,074	802	1,086	114	-	-
4625+00.00 TO 4637+00.00	-	-	-	0	0		-	29	0	2,263	959	1,200	104	1	-
4637+00.00 TO 4638+05.00	-	-	-	0	0		-	6	0	456	0	456	0	-	-
TOTALS	1,012.5	1	7	8	0	1,248	23	283	8	18,059	3,801	12,386	624	7	1

PAVEMENT MARKING SCHEDULE

STATION TO STATION	POLYUREA PAVEMENT MARKING TYPE I-LETTERS AND SYMBOLS	POLYUREA PAVEMENT MARKING, TYPE I-LINE 4"	POLYUREA PAVEMENT MARKING, TYPE I-LINE 5"	POLYUREA PAVEMENT MARKING, TYPE I-LINE 8"	POLYUREA PAVEMENT MARKING, TYPE I-LINE 12"	POLYUREA PAVEMENT MARKING TYPE I-LINE 24"	RAISED REFLECTIVE PAVEMENT MARKER	RAISED REFLECTIVE PAVEMENT MARKER (BRIDGE)
	SQ FT	FOOT	FOOT	FOOT	FOOT	FOOT	EACH	EACH
4474+50.00 TO 4482+00.00	-	3,002	940	-	82	-	95	-
4482+00.00 TO 4506+00.00	-	7,599	2,821	3,918	290	-	319	-
4506+00.00 TO 4529+00.00	-	6,896	2,420	7,036	1,535	-	322	-
4529+00.00 TO 4553+00.00	-	8,908	2,570	7,540	1,786	12	321	-
4553+00.00 TO 4577+00.00	-	10,220	3,000	3,033	467	12	330	-
4577+00.00 TO 4601+00.00	127.4	9,765	3,000	1,585	344	0	316	4
4601+00.00 TO 4625+00.00	36.4	8,313	3,106	3,223	397	51	311	-
4625+00.00 TO 4638+05.00	72.8	5,774	1,881	4,637	1,225	0	363	-
TOTALS	236.6	60,477	19,738	30,972	6,126	75	2,377	4

SCH-3

REVISIONS	
NAME	DATE
2 ADDENDUM 2	8/07/06

ILLINOIS DEPARTMENT OF TRANSPORTATION
F.A.I. 90/94 (DAN RYAN EXPRESSWAY)
GARFIELD BLVD TO 31ST STREET (NB LOCAL LANES)

SCHEDULE OF QUANTITIES

SCALE: NONE DRAWN BY: NJH
DATE: June 9, 2006 CHECKED BY: RMG

CTE | AECOM

D:\PROJECTS\NB-conts 18 & 19\NB-cont 18\schedules\sch32.dgn 8/8/2006 3:34:13 PM

F.A.I. RTE.	SECTION	COUNTY	TOTAL SHEETS	SHEET NO.
90/94	*	COOK	565	33
STA.		TO STA.		
FED. ROAD DIST. NO. 1	ILLINOIS	FED. AID PROJECT		

62301 * (2021-922 PT2 ETC 2324.6-1P) R-10

EARTHWORK SCHEDULE

STATION TO STATION		REMOVAL AND DISPOSAL OF UNSUITABLE MATERIAL	EARTH EXCAVATION	EARTH EXCAVATION (SPECIAL)	EARTH EXCAVATION ADJUSTED FOR SHRINKAGE *	EMBANKMENT	EARTHWORK BALANCE WASTE(+) OR SHORTAGE(-)	EXCAVATE EXISTING GRANULAR MATERIAL	PLACE EXISTING GRANULAR MATERIAL	EXISTING GRANULAR MATERIAL BALANCE WASTE(+) OR SHORTAG(-)
		CU YD	CU YD	CU YD	CU YD	CU YD	CU YD	CU YD	CU YD	CU YD
4474+50	4475+00	0	209	0	178	0	178	12	71	-59
4475+00	4476+00	0	429	0	365	0	365	23	141	-118
4476+00	4477+00	21	496	0	422	0	422	23	141	-118
4477+00	4478+00	38	568	0	483	0	483	23	141	-118
4478+00	4479+00	26	565	0	481	0	481	23	141	-118
4479+00	4480+00	17	529	0	450	0	450	23	141	-118
4480+00	4481+00	13	496	0	422	0	422	23	141	-118
4481+00	4482+00	12	487	0	414	0	414	23	141	-118
4482+00	4483+00	12	479	0	408	0	408	23	141	-118
4483+00	4484+00	12	485	0	413	0	413	23	141	-118
4484+00	4485+00	12	479	0	408	0	408	23	141	-118
4485+00	4486+00	6	427	0	363	0	363	23	141	-118
4486+00	4487+00	0	392	0	334	0	334	23	141	-118
4487+00	4488+00	4	494	0	420	0	420	27	180	-153
4488+00	4489+00	12	567	0	482	0	482	32	215	-183
4489+00	4490+00	21	581	0	494	0	494	32	208	-176
4490+00	4491+00	32	618	0	526	0	526	32	200	-168
4491+00	4492+00	43	648	0	551	0	551	32	193	-161
4492+00	4493+00	50	707	0	601	0	601	27	186	-159
4493+00	4494+00	52	707	0	601	0	601	23	178	-155
4494+00	4495+00	50	646	0	550	0	550	23	171	-148
4495+00	4496+00	47	590	0	502	0	502	23	163	-140
4496+00	4497+00	43	572	0	487	0	487	23	156	-133
4497+00	4498+00	45	585	0	498	0	498	23	149	-126
4498+00	4499+00	45	585	0	498	0	498	23	143	-120
4499+00	4500+00	43	596	0	507	0	507	23	141	-118
4500+00	4501+00	43	590	0	502	0	502	23	141	-118
4501+00	4502+00	21	492	0	419	0	419	23	141	-118
4502+00	4503+00	19	422	0	359	2	357	23	141	-118
4503+00	4504+00	38	439	0	374	4	370	23	141	-118
4504+00	4505+00	39	440	0	374	4	370	23	141	-118
4505+00	4506+00	43	424	0	361	4	357	23	147	-124
4506+00	4507+00	41	398	0	339	4	335	23	162	-139
4507+00	4508+00	32	400	0	340	4	336	23	180	-157
4508+00	4509+00	26	449	0	382	4	378	24	199	-175
4509+00	4510+00	23	470	0	400	4	396	25	219	-194
4510+00	4511+00	15	503	0	428	4	424	25	239	-214
4511+00	4512+00	12	570	0	485	4	481	25	260	-235
4512+00	4513+00	10	666	0	567	2	565	25	280	-255
4513+00	4514+00	4	711	0	605	0	605	25	297	-272
4514+00	4515+00	15	505	0	430	13	417	27	223	-196
4515+00	4516+00	36	307	0	261	25	236	29	141	-112
4516+00	4517+00	39	305	0	260	13	247	29	169	-140
4517+00	4518+00	50	308	0	262	12	250	28	193	-165
4518+00	4519+00	67	316	0	269	15	254	27	186	-159
4519+00	4520+00	67	321	8	280	141	139	26	176	-150
4520+00	4521+00	76	389	8	338	141	197	26	165	-139
4521+00	4522+00	99	486	0	414	12	402	26	154	-128
4522+00	4523+00	119	537	0	457	8	449	26	175	-149
4523+00	4524+00	141	673	0	573	4	569	37	195	-158
4524+00	4525+00	154	694	6	595	49	546	47	188	-141
4525+00	4526+00	139	673	6	578	49	529	46	186	-140
4526+00	4527+00	128	874	0	743	8	735	45	186	-141
4527+00	4528+00	121	1,164	0	990	8	982	44	186	-142
4528+00	4529+00	54	990	0	842	2	840	48	186	-138

CONTINUED ON NEXT SHEET

EARTHWORK SCHEDULE

STATION TO STATION		REMOVAL AND DISPOSAL OF UNSUITABLE MATERIAL	EARTH EXCAVATION	EARTH EXCAVATION (SPECIAL)	EARTH EXCAVATION ADJUSTED FOR SHRINKAGE *	EMBANKMENT	EARTHWORK BALANCE WASTE(+) OR SHORTAGE(-)	EXCAVATE EXISTING GRANULAR MATERIAL	PLACE EXISTING GRANULAR MATERIAL	EXISTING GRANULAR MATERIAL BALANCE WASTE(+) OR SHORTAG(-)
		CU YD	CU YD	CU YD	CU YD	CU YD	CU YD	CU YD	CU YD	CU YD
4529+00	4530+00	39	1,008	0	857	0	857	67	186	-119
4530+00	4531+00	80	993	0	845	0	845	67	186	-119
4531+00	4532+00	88	909	0	773	2	771	67	186	-119
4532+00	4533+00	93	885	0	753	2	751	67	186	-119
4533+00	4534+00	93	835	0	710	13	697	67	186	-119
4534+00	4535+00	93	815	0	693	45	648	67	190	-123
4535+00	4536+00	93	967	0	822	45	777	67	200	-133
4536+00	4537+00	95	1,183	0	1,006	19	987	71	202	-131
4537+00	4538+00	93	1,191	0	1,013	8	1,005	76	200	-124
4538+00	4539+00	93	1,021	0	868	17	851	91	200	-109
4539+00	4540+00	95	926	0	788	108	680	104	200	-96
4540+00	4541+00	82	691	0	588	221	367	104	200	-96
4541+00	4542+00	71	472	0	402	193	209	86	200	-114
4542+00	4543+00	71	441	0	375	113	262	65	189	-124
4543+00	4544+00	69	448	0	381	138	243	62	178	-116
4544+00	4545+00	73	516	0	439	154	285	60	178	-118
4545+00	4546+00	80	644	28	572	219	353	62	178	-116
4546+00	4547+00	82	848	54	767	228	539	67	178	-111
4547+00	4548+00	78	988	26	862	76	786	75	178	-103
4548+00	4549+00	76	1,039	0	884	12	872	69	178	-109
4549+00	4550+00	71	1,200	0	1,020	21	999	60	178	-118
4550+00	4551+00	86	1,387	0	1,179	23	1,156	60	178	-118
4551+00	4552+00	106	792	0	674	15	659	58	173	-115
4552+00	4553+00	104	670	0	570	4	566	56	163	-107
4553+00	4554+00	106	1,194	0	1,015	0	1,015	56	154	-98
4554+00	4555+00	115	1,193	0	1,015	0	1,015	56	145	-89
4555+00	4556+00	128	1,150	0	978	0	978	56	141	-85
4556+00	4557+00	134	1,078	0	917	0	917	56	141	-85
4557+00	4558+00	123	957	0	814	0	814	56	141	-85
4558+00	4559+00	108	1,052	0	895	0	895	56	141	-85
4559+00	4560+00	102	1,348	0	1,146	0	1,146	56	141	-85
4560+00	4561+00	100	1,498	0	1,274	0	1,274	56	141	-85
4561+00	4562+00	104	1,409	0	1,198	0	1,198	56	141	-85
4562+00	4563+00	106	1,172	0	997	0	997	56	141	-85
4563+00	4564+00	113	941	0	800	0	800	63	141	-78
4564+00	4565+00	119	785	0	668	10	658	69	141	-72
4565+00	4566+00	58	802	0	682	10	672	63	160	-97
4566+00	4567+00	58	886	0	754	0	754	63	178	-115
4567+00	4568+00	115	876	0	745	10	735	65	178	-113
4568+00	4569+00	115	865	0	736	13	723	63	178	-115
4569+00	4570+00	115	893	0	760	30	730	63	178	-115
4570+00	4571+00	110	873	0	743	41	702	65	178	-113
4571+00	4572+00	97	872	0	742	34	708	69	178	-109
4572+00	4573+00	82	805	0	685	39	646	75	175	-100
4573+00	4574+00	86	680	0	578	34	544	67	169	-102
4574+00	4575+00	78	726	0	618	36	582	52	162	-110
4575+00	4576+00	80	757	0	644	32	612	49	154	-105
4576+00	4577+00	99	709	0	603	28	575	49	148	-99
4577+00	4578+00	93	813	0	692	25	667	52	143	-91
4578+00	4579+00	93	909	0	773	8	765	56	141	-85
4579+00	4580+00	95	776	0	660	2	658	56	141	-85
4580+00	4581+00	99	687	0	584	19	565	56	141	-85
4581+00	4582+00	104	455	0	387	19	368	160	141	19
4582+00	4583+00	52	259	0	221	0	221	247	141	106
4583+00	4584+00	23	341	0	290	52	238	263	162	101

SCH-4

2

* THE SHRINKAGE FACTOR USED TO CALCULATE EARTHWORK QUANTITIES IS 15%.
FACTOR IS FOR BOTH EARTH EXCAVATION AND EARTH EXCAVATION (SPECIAL) QUANTITIES.

CTE | AECOM

REVISIONS	
NAME	DATE
2 ADDENDUM 2	8/07/06

ILLINOIS DEPARTMENT OF TRANSPORTATION
F.A.I. 90/94 (DAN RYAN EXPRESSWAY)
GARFIELD BLVD TO 31ST STREET (NB LOCAL LANES)

SCHEDULE OF QUANTITIES

SCALE: NONE — DRAWN BY: NJH
DATE: June 9, 2006 — CHECKED BY: RMG

p:\p4\p468\dwh\18\dmrs 18 & 19\schnjh\ch 18\schedules\sch8\0422\dsh

8/8/2006 3:34:13 PM

F.A.I. RTE.	SECTION	COUNTY	TOTAL SHEETS	SHEET NO.
90/94	*	COOK	565	34
STA.		TO STA.		
FED. ROAD DIST. NO. 1	ILLINOIS	FED. AID PROJECT		

62301 * (2021-922 PT2 ETC 2324.6-1P) R-10

p:\p40468\civil\ROcontrs 18 & 19\stl\contr 18\schedules\sch800520.stl

EARTHWORK SCHEDULE

STATION	TO STATION	REMOVAL AND DISPOSAL OF UNSUITABLE MATERIAL	EARTH EXCAVATION	EARTH EXCAVATION (SPECIAL)	EARTH EXCAVATION ADJUSTED FOR SHRINKAGE *	EMBANKMENT	EARTHWORK BALANCE WASTE(+) OR SHORTAGE(-)	EXCAVATE EXISTING GRANULAR MATERIAL	PLACE EXISTING GRANULAR MATERIAL	EXISTING GRANULAR MATERIAL BALANCE WASTE(+) OR SHORTAG(-)
		CU YD	CU YD	CU YD	CU YD	CU YD	CU YD	CU YD	CU YD	CU YD
4584+00	4585+00	52	378	0	322	117	205	315	162	153
4585+00	4586+00	65	256	0	218	134	84	354	141	213
4586+00	4587+00	43	163	0	139	76	63	319	141	178
4587+00	4588+00	17	106	0	91	19	72	376	141	235
4588+00	4589+00	21	11	0	10	19	-9	478	141	337
4589+00	4590+00	25	14	0	12	15	-3	475	141	334
4590+00	4591+00	38	0	0	0	154	-154	491	141	350
4591+00	4592+00	39	0	0	0	239	-239	499	141	358
4592+00	4593+00	25	0	0	0	163	-163	495	141	354
4593+00	4594+00	17	0	0	0	128	-128	500	141	359
4594+00	4595+00	13	0	0	0	110	-110	508	141	367
4595+00	4596+00	49	9	0	8	134	-126	506	141	365
4596+00	4597+00	49	13	0	12	138	-126	512	141	371
4597+00	4598+00	13	0	0	0	115	-115	526	141	385
4598+00	4599+00	8	0	0	0	60	-60	530	141	389
4599+00	4600+00	12	118	0	101	6	95	532	141	391
4600+00	4601+00	12	78	0	67	6	61	660	141	519
4601+00	4602+00	13	0	0	0	8	-8	760	141	619
4602+00	4603+00	26	0	0	0	15	-15	725	141	584
4603+00	4604+00	28	0	0	0	13	-13	702	173	529
4604+00	4605+00	32	0	0	0	10	-10	680	200	480
4605+00	4606+00	36	0	0	0	12	-12	652	191	461
4606+00	4607+00	43	33	0	29	34	-5	458	181	277
4607+00	4608+00	43	202	0	172	47	125	273	169	104
4608+00	4609+00	19	324	0	276	21	255	293	160	133
4609+00	4610+00	49	227	0	193	0	193	462	153	309
4610+00	4611+00	91	0	0	0	12	-12	610	145	465
4611+00	4612+00	43	0	0	0	12	-12	604	141	463
4612+00	4613+00	0	0	0	0	0	0	584	141	443
4613+00	4614+00	0	0	0	0	0	0	580	141	439
4614+00	4615+00	0	0	0	0	0	0	599	141	458
4615+00	4616+00	0	128	0	109	0	109	602	141	461
4616+00	4617+00	41	105	12	100	28	72	725	141	584
4617+00	4618+00	88	0	43	37	110	-73	828	141	687
4618+00	4619+00	86	21	58	68	150	-82	815	141	674
4619+00	4620+00	86	276	62	288	223	65	576	172	404
4620+00	4621+00	97	613	65	577	247	330	323	196	127
4621+00	4622+00	100	694	41	625	119	506	323	184	139
4622+00	4623+00	99	663	25	585	54	531	323	178	145
4623+00	4624+00	99	577	47	531	110	421	323	178	145
4624+00	4625+00	95	570	71	545	243	302	323	191	132
4625+00	4626+00	80	585	71	558	354	204	341	191	150
4626+00	4627+00	65	259	62	273	295	-22	682	178	504
4627+00	4628+00	62	0	49	42	178	-136	978	178	800
4628+00	4629+00	45	0	21	18	76	-58	775	178	597
4629+00	4630+00	30	267	0	227	0	227	632	178	454
4630+00	4631+00	39	309	0	263	0	263	706	178	528
4631+00	4632+00	50	246	0	210	0	210	782	178	604
4632+00	4633+00	60	123	0	105	0	105	813	178	635
4633+00	4634+00	69	313	0	267	2	265	565	178	387
4634+00	4635+00	75	529	0	450	6	444	334	178	156
4635+00	4636+00	38	467	0	397	4	393	328	187	141
4636+00	4637+00	10	469	0	399	0	399	315	200	115
4637+00	4638+00	21	74	0	63	0	63	326	212	114
4638+00	4639+00	12	0	0	0	0	0	167	109	58
4639+00	4640+00	0	0	0	0	0	0	0	0	0
	TOTAL	9,709	87,303	763	74,927	6,674	+68,253	34,458	27,469	+6,989

2

* THE SHRINKAGE FACTOR USED TO CALCULATE EARTHWORK QUANTITIES IS 15%. FACTOR IS FOR BOTH EARTH EXCAVATION AND EARTH EXCAVATION (SPECIAL) QUANTITIES.

CTE | AECOM

SCH-5

REVISIONS	
NAME	DATE
2 ADDENDUM 2	8/07/06

ILLINOIS DEPARTMENT OF TRANSPORTATION
F.A.I. 90/94 (DAN RYAN EXPRESSWAY)
GARFIELD BLVD TO 31ST STREET (NB LOCAL LANES)

SCHEDULE OF QUANTITIES

SCALE: NONE DRAWN BY: NJH
DATE: June 9, 2006 CHECKED BY: RMG

8/8/2006 3:34:14 PM

F.A.I. RTE.	SECTION	COUNTY	TOTAL SHEETS	SHEET NO.
90/94	*	COOK	565	53
STA. 4492+00		TO STA. 4504+00		
FED. ROAD DIST. NO. 1	ILLINOIS	FED. AID PROJECT		

62301 * (2021-922 PT2 ETC 2324.6-1P) R-10

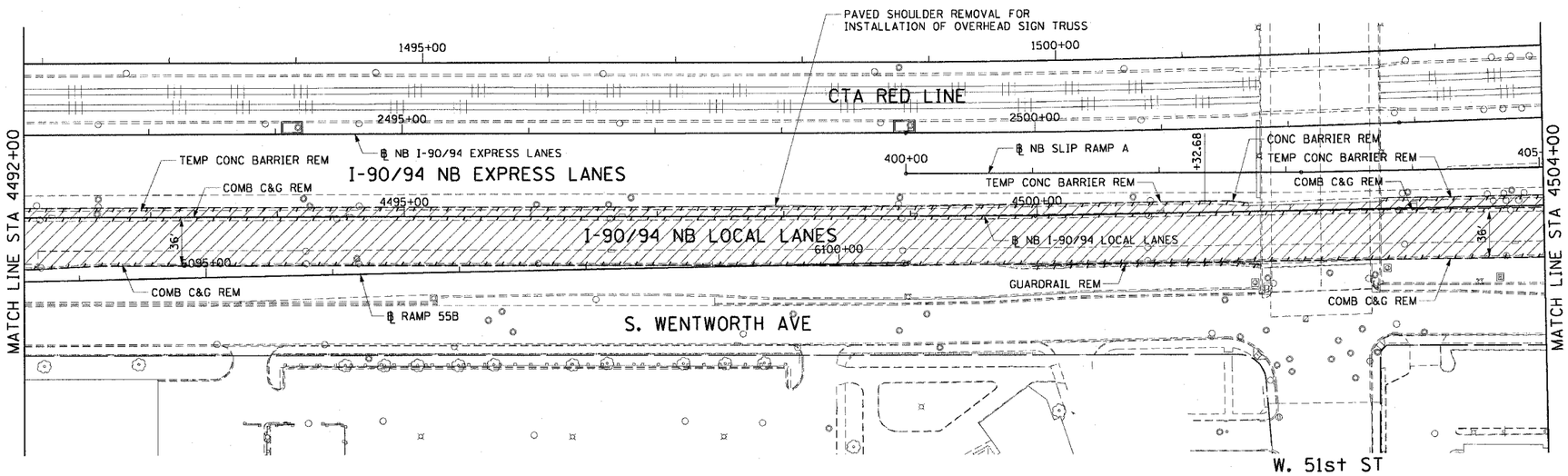

LEGEND:

- PAVEMENT REMOVAL
- PAVED SHOULDER REMOVAL
- LINEAR REMOVALS
- TEMPORARY FENCE
- X SPOT REMOVAL
- EX HIGH MAST TOWER LOCATION - SEE HIGH MAST TOWER SCHEDULE FOR DETAILS

NOTES:

1. SEE PROPOSED OVERHEAD SIGN STRUCTURE DETAILS FOR LIMITS OF PAVED SHOULDER REMOVAL AT SIGN FOUNDATION LOCATIONS.

EXISTING CONDITIONS AND REMOVAL

PROPOSED IMPROVEMENTS

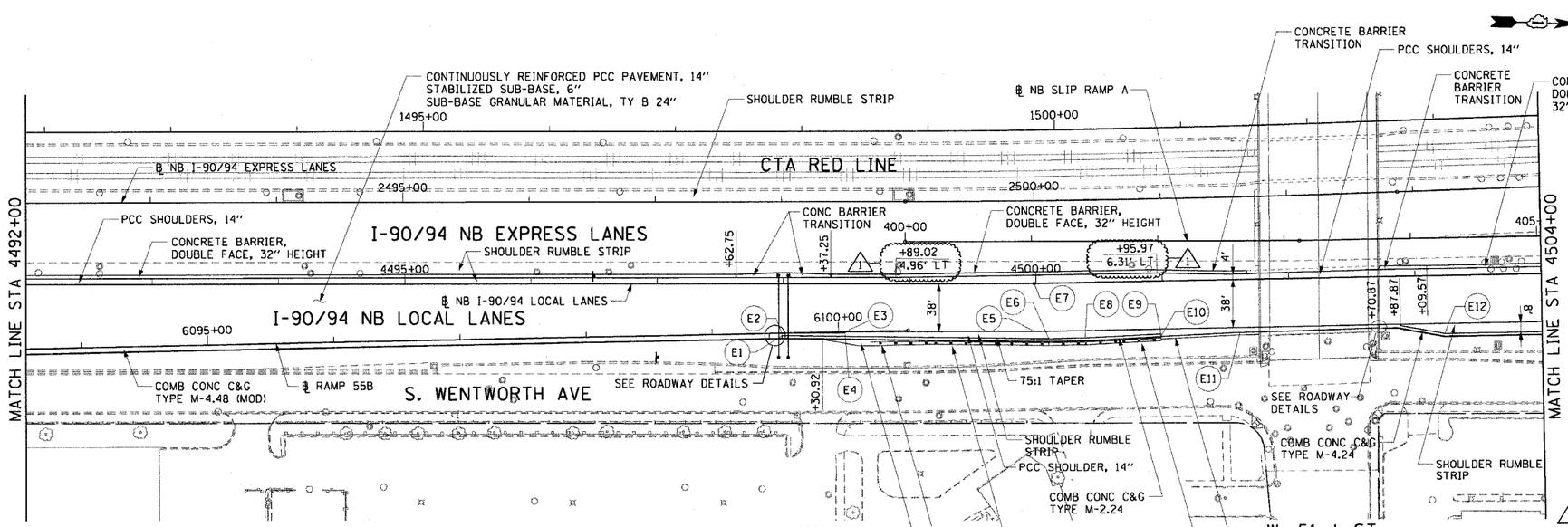

LEGEND:

- HIGH MAST LIGHT TOWER LOCATION - SEE HIGH MAST TOWER SCHEDULE FOR DETAILS

NOTES:

1. STATION CALLOUTS ARE FROM THE NB I-90/94 LOCAL LANES BASELINE UNLESS OTHERWISE NOTED.
2. SEE ROADWAY DETAILS FOR BARRIER WALL TRANSITIONS AT BRIDGE PIERS AND SIGN STRUCTURES.
3. SEE ALIGNMENT PLANS FOR CURVE DATA.
4. SHOULDER RUMBLE STRIPS SHALL BE CONSTRUCTED IN THE PROPOSED AND EXISTING SHOULDERS OF THE LOCAL AND EXPRESS LANES ACCORDING TO IDOT STANDARD 642001.
5. SEE STRUCTURAL PLANS FOR PROPOSED OVERHEAD SIGN LOCATIONS AND DETAILS.

PT.	STATION	OFFSET	LOC	PT.	STATION	OFFSET	LOC
E1	4497+98.67	41.00' RT	EOS	E7	4499+98.68	0.00'	EOP
E2	4497+98.67	39.00' RT	EOP	E8	4500+38.17	44.00' RT	EOS
E3	4498+48.67	38.00' RT	EOP	E9	4500+98.17	42.00' RT	EOS
E4	4498+48.67	39.00' RT	EOP	E10	4500+98.17	44.00' RT	EOS
E5	4499+98.68	38.00' RT	EOP	E11	4501+60.94	41.91' RT	EOS
E6	4500+09.33	44.00' RT	EOS	E12	4503+22.87	46.00' RT	EOS

0 50' 100'

RDY-3

REVISIONS	
NAME	DATE
1 ADDENDUM 1	7/27/06

ILLINOIS DEPARTMENT OF TRANSPORTATION
F.A.I. 90/94 (DAN RYAN EXPRESSWAY)
GARFIELD BLVD TO 31ST STREET (NB LOCAL LANES)

EXISTING AND PROPOSED ROADWAY PLANS

SCALE: 1"=50' DRAWN BY: PHP
DATE: June 9, 2006 CHECKED BY: NJH

CTE | AECOM

P:\P4D6B\CIVIL\B-Cnfrs 18 & 19\SAF\Cntr 18\Roadway Plan\PP18C032A.dgn 7/27/2006 5:29:15 PM

F.A.I.	SECTION	COUNTY	TOTAL SHEETS	SHEET NO.
94/90	*	COOK	565	131
STA.		TO STA.		
FED. ROAD DIST. NO.	ILLINOIS	FED. AID PROJECT		

62301 * (2021-922 PT2 ETC 2324.6-1P)R-10

DRAINAGE & UTILITIES NOTES:

1. THE LOCATIONS OF EXISTING UTILITIES, AS SHOWN ON THE DRAWINGS, REPRESENT DATA RECEIVED FROM VARIOUS SOURCES. IT IS NOT GUARANTEED TO BE CORRECT OR ALL INCLUSIVE. THE CONTRACTOR MUST CONDUCT HIS OWN INVESTIGATIONS INTO THE LOCATION, SIZE, DEPTH, AND NATURE OF ANY AND ALL EXISTING UTILITIES WHICH MAY IMPACT THE WORK UNDER THIS CONTRACT. ANY EXISTING UTILITIES WHICH ARE TO REMAIN IN SERVICE MUST BE FULLY PROTECTED BY THE CONTRACTOR AND ANY DAMAGE CAUSED BY THE CONSTRUCTION MUST BE IMMEDIATELY REPAIRED AT THE CONTRACTOR'S EXPENSE TO THE SATISFACTION OF THE ENGINEER. THE CONTRACTOR WILL BE RESPONSIBLE FOR THE PROTECTION OF ANY AND ALL SURFACE AND UNDERGROUND UTILITIES, EVEN THOUGH THEY MAY NOT BE IDENTIFIED ON THE PLANS.

2. THE CONTRACTOR MUST COORDINATE CONSTRUCTION ACTIVITIES WITH THE RESPECTIVE UTILITIES OF THE CITY OF CHICAGO. BEFORE STARTING ANY EXCAVATION, THE CONTRACTOR MUST CALL THE CHICAGO UTILITY ALERT NETWORK (C.U.A.N.) AT (312) 744-7000 FOR FIELD LOCATIONS OF BURIED ELECTRICAL, TELEPHONE, CABLE, AND GAS FACILITIES (48 HOURS NOTIFICATION IS REQUIRED). THE CONTRACTOR MUST CONTACT THE CITY OF CHICAGO DEPARTMENT OF WATER MANAGEMENT, PERMIT SECTION AT (312) 747-7893 FOR WATER AND CITY SEWER LOCATIONS.

3. THE CONTRACTOR MUST MAINTAIN THE SURFACE DRAINAGE OF ALL ROADWAYS DURING CONSTRUCTION OF THIS PROJECT. WHEN EXISTING DRAINAGE FACILITIES ARE DISTURBED, THE CONTRACTOR MUST PROVIDE AND MAINTAIN TEMPORARY OUTLETS AND CONNECTIONS FOR ALL PRIVATE OR PUBLIC DRAINS, SEWERS, INLETS, AND CATCH BASINS. THE CONTRACTOR MUST PROVIDE FACILITIES TO TAKE IN ALL STORM WATER WHICH WILL BE RECIEVED BY THESE DRAINS AND SEWERS AND DISCHARGE THE SAME. THE CONTRACTOR MUST PROVIDE AND MAINTAIN A TEMPORARY OUTLET, AND BE PREPARED AT ALL TIMES TO DISPOSE OF THE WATER RECEIVED FROM THESE TEMPORARY CONNECTIONS UNTIL INSTALLATION IS COMPLETE, INCLUDING PAVEMENT. THIS WORK WILL NOT BE PAID FOR SEPARATELY BUT MUST BE CONSIDERED INCLUDED IN THE COST OF THE CONTRACT.

4. WHEN, DURING CONSTRUCTION OPERATIONS, ANY LOOSE MATERIAL IS DEPOSITED IN DRAINAGE STRUCTURES AND THE FLOW OF WATER IS OBSTRUCTED, IT MUST BE REMOVED AT THE CLOSE OF EACH WORKING DAY. AT THE CONCLUSION OF CONSTRUCTION OPERATIONS, ALL DRAINAGE STRUCTURES (NEW AND EXISTING) MUST BE FREE OF ALL DIRT AND DEBRIS. THIS WORK WILL NOT BE PAID FOR SEPARATELY BUT MUST BE CONSIDERED INCLUDED IN THE COST OF THE CONTRACT.

5. THE CONTRACTOR MUST PROTECT THE EXISTING MAIN DRAIN DROP MANHOLES FROM THE ENTRY OF ANY LOOSE MATERIAL AS DIRECTED BY THE ENGINEER. THIS WORK WILL NOT BE PAID FOR SEPARATELY BUT MUST BE CONSIDERED INCLUDED IN THE COST OF THE CONTRACT.

6. THE CONTRACTOR MUST PROTECT NEW DRAINAGE STRUCTURES FROM THE ENTRY OF ERODED SOILS AS DIRECTED BY THE ENGINEER. THIS WORK WILL NOT BE PAID FOR SEPARATELY BUT MUST BE CONSIDERED INCLUDED IN THE COST OF THE CONTRACT.

7. THE LOCATION OF DRAINAGE STRUCTURES AND PIPES CONSTRUCTED UNDER PREVIOUS CONTRACTS IS BASED ON CONTRACT PLAN DRAWINGS AVAILABLE DURING DESIGN. THE CONTRACTOR MUST FIELD VERIFY LIMITS, LOCATIONS, AND ELEVATIONS OF PREVIOUS CONSTRUCTION.

8. STORM SEWER PLUGS MUST BE INCLUDED IN THE COST OF THE ASSOCIATED PIPE REMOVAL ITEMS AND WILL NOT BE PAID SEPARATELY.

9. 'PIPE UNDERDRAINS 6" (SPECIAL)' WILL BE USED TO CONNECT TO DRAINAGE STRUCTURES. CONNECTION ELEVATIONS MUST BE DETERMINED BY THE CONTRACTOR BASED ON A MINIMUM LATERAL CONNECTING SLOPE OF 1%.

10. THE CONTRACTOR MUST ENSURE POSITIVE DRAINAGE TO ALL INLETS, CATCHBASINS, AND OPEN MANHOLES.

11. GRATES MUST BE INSTALLED WITH THE VANES ORIENTED AS DIRECTED BY THE RESIDENT ENGINEER.

12. ALL TEMPORARY OR PERMANENT CONNECTIONS OF SEWERS AND UNDERDRAINS TO PROPOSED AND EXISTING DRAINAGE STRUCTURES, INCLUDING ANY NEW HOLES REQUIRED IN THE DRAINAGE STRUCTURE, MUST BE CONSIDERED INCLUDED IN THE COST OF THE ASSOCIATED STORM SEWER OR PIPE UNDERDRAIN ITEM. NO ADDITIONAL COMPENSATION WILL BE ALLOWED.

13. STATION AND OFFSET VALUES GIVEN FOR EXISTING STRUCTURES REPRESENT THE APPROXIMATE CENTER OF THE EXISTING CASTING.

14. DRAINAGE REMOVALS IN THE VICINITY OF THE CTA ARE SHOWN BASED ON RECORD DRAWINGS AND SURVEY WHERE AVAILABLE. ALL EXISTING ACTIVE DRAINAGE CONNECTIONS FROM THE CTA MUST BE MAINTAINED. ALL ACTIVE DRAINAGE CONNECTIONS FROM THE CTA DISCOVERED DURING CONSTRUCTION MUST BE MAINTAINED AS DIRECTED BY THE ENGINEER. MAINTENANCE OF ANY ACTIVE DRAINAGE CONNECTIONS FROM THE CTA THAT ARE DISCOVERED DURING CONSTRUCTION WILL NOT BE PAID SEPARATELY, BUT MUST BE INCLUDED IN THE COST OF THE ASSOCIATED DRAINAGE REMOVAL ITEMS.

15. STATION AND OFFSET VALUES GIVEN FOR PROPOSED DRAINAGE STRUCTURES REPRESENT THE CENTER OF THE CASTING.

16. EXISTING LATERAL SEWERS WITHIN THE DAN RYAN PROJECT LIMITS (FRONTAGE ROAD AND MAINLINE) THAT ARE TO REMAIN IN PLACE, MUST BE CLEANED OF SILT OR ANY OTHER DEBRIS AS DIRECTED BY THE ENGINEER. THIS WORK WILL BE PAID FOR AS 'CLEANING STORM SEWERS'.

17. ALL PROPOSED LATERAL STORM SEWERS MUST BE INSTALLED AT A MINIMUM SLOPE OF 1% UNLESS OTHERWISE INDICATED. CONNECTIONS TO EXISTING SEWERS OR STRUCTURES MUST BE INCLUDED WITH THE ASSOCIATED STORM SEWER PAY ITEM. FRONTAGE ROAD STORM SEWER LATERALS WILL VARY BASED ON EXISTING SEWER INVERTS AND UTILITY CONFLICTS.

18. ALL SEWERS TO BE ABANDONNED MUST BE FILLED WITH GROUT SLURRY AND PLUGGED AT THE UPSTREAM END.

19. TOP OF FRAME ELEVATIONS ON DRAINAGE STRUCTURES MUST BE MODIFIED TO MEET FINISHED SHOULDER AND CURB AND GUTTER FLOWLINE ELEVATIONS AS DIRECTED BY THE ENGINEER.

20. FOR CLARITY, PIPE UNDERDRAINS IN THE PLAN VIEW ARE NOT NECESSARILY DRAWN IN THEIR EXACT INSTALLATION LOCATIONS. SEE TYPICAL SECTIONS AND DRAINAGE DETAILS FOR EXACT LOCATIONS OF PIPE UNDERDRAINS.

21. FOR IDOT ITEMS, THE CONTRACTOR MUST USE FLAT SLAB TOPS IN LIEU OF CONICALLY TAPERED TOPS FOR MANHOLES AND CATCHBASINS WHEREVER NECESSARY TO AVOID CONFLICTS WITH EXISTING UTILITIES. FLAT SLAB TOPS WILL NOT BE MEASURED FOR PAYMENT, BUT MUST BE INCLUDED IN THE UNIT COST OF THE ASSOCIATED DRAIANGE STRUCTURES.

22. IF FIELD CONDITIONS REQUIRE COMED ASSISTANCE (MANHOLE FRAME/COVER ADJUSTMENTS), CONTACT COMED PROJECT ENGINEER, DON RIES, 773-838-2905, SIX WEEKS PRIOR TO START OF WORK IN THE RELATED AREA.

23. IF FIELD CONDITIONS REQUIRE AT&T ASSISTANCE (MANHOLE FRAME/COVER ADJUSTMENTS), CONTACT AT&T, STAN PLODZIEN, 708-396-7608. 48 HOURS NOTIFICATION REQUIRED.

24. EXISTING PIPE UNDERDRAIN LOCATED BETWEEN THE EXPRESS LANES AND THE LOCAL LANES IS TO REMAIN IN SERVICE AND MUST BE PROTECTED DURING CONSTRUCTION. ANY DAMAGE TO THIS EXISTING UNDERDRAIN MUST BE REPAIRED AT THE CONTRACTOR'S EXPENSE. 2

25. PROPOSED PIPE UNDERDRAIN POSITIONS SHOWN ON THE DRAINAGE PLANS ARE APPROXIMATE. SEE TYPICAL SECTIONS FOR ACTUAL PROPOSED UNDERDRAIN POSITIONS.

DRAINAGE & UTILITIES LEGEND:

	EXISTING	PROPOSED
STORM SEWER		
PIPE UNDERDRAIN		
WATER MAIN	W	W
GAS MAIN	G	G
SANITARY SEWER		
CABLE TELEVISION	CTV	CTV
FIBER OPTIC	FO	FO
TELEPHONE	T	T
ELECTRIC	E	E
IDOT ELECTRICAL CONDUIT*		
UTILITY REMOVAL		
ABANDONNED UTILITY		
MAIN DRAIN SEWER	FLOW	
INLET		
CATCH BASIN		
MANHOLE		
SURFACE DRAINAGE STRUCTURE (SEE SCHEDULE FOR TYPE)		
PGL CREST POINT		
PGL SAG POINT		
DRAINAGE STRUCTURE NUMBER**	CC-SS -XX	SS -XX
STRUCTURE TO BE CLEANED	C	
STRUCTURE TO BE FILLED	F	
STRUCTURE TO BE REMOVED	R	
STRUCTURE TO BE RECONSTRUCTED	REC	
STRUCTURE TO BE ADJUSTED	ADJ	
FRAMES AND GRATES TO BE ADJUSTED	A	
STRUCTURE TO BE ADJUSTED, SPECIAL	SP	
HIGH MAST LIGHT TOWER LOCATION - SEE HIGH MAST TOWER SCHEDULE FOR DETAILS		

DN-01

* SEE ELECTRICAL INFRASTRUCTURE SHEETS, AND CONTRACTS 62583 AND 62733 FOR ADDITIONAL INFORMATION

** DRAINAGE STRUCTURE NUMBERING CONVENTION:

'CC' = DAN RYAN CONTRACT NUMBER (EX. STR. ONLY)
(14 = IDOT CONTRACT 62300)
(15 = IDOT CONTRACT 62302)
'SS' = SHEET NUMBER IN DRAINAGE & UTILITY SEQUENCE
'XX' = STRUCTURE NUMBER ON SHEET

REVISIONS		
	NAME	DATE
	REVISED	6/21/06
2	ADDENDUM 2	8/04/06

ILLINOIS DEPARTMENT OF TRANSPORTATION

F.A.I. 94/90 (DAN RYAN EXPRESSWAY)

GARFIELD BLVD TO 31ST STREET (NB LOCAL LANES)

DRAINAGE SCHEDULES

DRAINAGE NOTES & LEGEND

SCALE: 1"=N.T.S — DRAWN BY: JAM

DATE: 06/09/06 — CHECKED BY: DDM

BOWMAN, BARRETT & ASSOCIATES INC.
CONSULTING ENGINEERS
Chicago, Illinois
312.228.0100
www.bbandainc.com

F.A.I.	SECTION	COUNTY	TOTAL SHEETS	SHEET NO.
94/90	*	COOK	565	143
STA.		TO STA.		
FED. ROAD DIST. NO.	ILLINOIS	FED. AID PROJECT		

62301 * (2021-922 PT2 ETC 2324.6-1P)R-10

SCHEDULE OF DRAINAGE STRUCTURES

STR. NUMBER	STATION	OFFSET	RIM ELEV.	CATCH BASIN TA 4 DIA T1F OL	CATCH BASIN TA 4 DIA T8G	CATCH BASIN TA 4 DIA T20F&G	CATCH BASIN TA 4 DIA T24F&G	CATCH BASIN TC T20F&G	CATCH BASIN TC T24F&G	MANHOLE TA 4 DIA T1F CL	INVERT ELEVATIONS	TEMP. SOIL RET. SYS.	ROCK EXCAVATION
29-01	4531+10.00	47.0' RT	-5.79			1					-11.64SE, -11.54NE,		
29-02	4531+25.00	47.0' RT	-5.45			1					-11.4SW,		
29-03	4532+35.00	47.0' RT	-2.43			1					-8.76NE, -7.56SE,		
29-04	4533+60.00	47.0' RT	1.11			1					-10.11NW, -10.01SW,		
29-05	4529+70.00	47.0' RT	-7.90			1					-13.1SW,		
29-06	4529+77.50	51.0' RT	-5.97		1						-12.92SW,		
29-07	4535+27.50	51.0' RT	5.63		1						-7.48NW,		
30-01	4534+90.00	45.0' RT	2.84			1					-2.66NW, 0E,		
30-02	4536+27.76	76.9' RT	13.59			1					8.42NW,		
30-03	4536+26.82	57.0' RT	13.56			1					3.02NW, 8.22SE,		
30-04	4536+26.50	47.0' RT	7.89			1					-1.63NW, 2.77SE,		
30-05	4537+37.24	74.8' RT	12.26			1					1.77NW,		
30-06	4337+37.07	54.8' RT	11.65			1					0.17NW, 1.57SE,		
30-07	4537+30.00	47.0' RT	10.00	2		1					-0.2NW, -0.1SE,		
30-08	4537+40.98	3.0' LT	8.04	1							1.73W,		
30-09	4537+65.87	74.5' RT	12.16			1					6.55NE,		
30-10	4537+65.62	54.5' RT	11.41			1					6.25NE,		
30-11	4537+86.45	74.2' RT	12.14			1					6.23NW, 6.33SW, 6.33NE,		
30-12	4537+86.15	54.2' RT	11.39			1					5.93N, 6.03SW, 5.78NE, 6.03SE,		
30-13	4538+01.18	74.0' RT	12.15			1					6.49SW,		
30-14	4538+00.84	54.0' RT	11.40			1					5.68SW, 5.78,		
30-15	4538+37.45	73.2' RT	12.29			1					6.54NW, 6.64NE,		
30-16	4538+37.03	53.2' RT	11.54			1					6.24W, 6.34SE,		
30-17	4538+35.00	45.0' RT	11.32	2		1					4.57NW, 5.17S, 6.17E,		
30-18	4538+35.57	4.8' LT	9.17	1							0.25NW, 4.05SE,		
30-19	4538+56.55	72.7' RT	12.43			1					6.84SW,		
30-20	4535+60.00	56.0' RT	7.13							1	-7.55SW, -7.45NE,		
30-21	4537+17.81	61.3' RT	12.02							1	-6.6NE, -6.6SW,		
30-22	4534+87.70	73.9' RT	16.47							1	-7.28NW, -7.18NE,		
31-01	4539+47.35	69.8' RT	13.18	2		1					7.44NW, 7.94NE,		
31-02	4539+45.00	45.0' RT	12.34	1							5.49NW, 7.19SE,		
31-03	4539+43.00	6.7' LT	10.09	1							2.28NW, 4.98SE,		
31-04	4539+61.70	69.3' RT	13.28			1					8.09SW,		
31-05	4540+43.10	65.6' RT	13.71	2		1					8.05W, 8.15N ,		
31-06	4540+45.00	42.8' RT	12.93	1							6.02W, 7.82E,		
31-07	4540+40.38	8.5' LT	10.59	1							0.41W, 5.51E,		
31-08	4540+95.86	62.7' RT	13.86			1					8.7S ,		
31-09	4541+70.00	58.2' RT	13.91			1					6.47W, 8.27N,		
31-10	4542+00.00	56.2' RT	13.75			1					8.58S,		
31-11	4542+70.00	53.0' RT	12.98			1					5.76W,		
31-12	4543+65.00	53.0' RT	11.87			1					5.41W,		
32-01	4544+55.00	53.0' RT	10.51			1					4.71W,		
32-02	4545+68.67	53.0' RT	8.48			1					2.34W,		
32-03	4547+13.17	65.1' RT	5.53			1					0.23N,		
32-04	4547+28.11	66.4' RT	5.27			1					-0.02W, 0.08S, 0.08NE,		

CONTINUED ON NEXT SHEET

DS-12

REVISIONS NAME	DATE
REVISED	6/22/06
2 ADDENDUM 2	8/04/06

ILLINOIS DEPARTMENT OF TRANSPORTATION

F.A.I. 94/90 (DAN RYAN EXPRESSWAY)

GARFIELD BLVD TO 31ST STREET (NB LOCAL LANES)

DRAINAGE SCHEDULES

PROPOSED STRUCTURES

SCALE: 1"=N.T.S DRAWN BY: JAM

DATE: 06/09/06 CHECKED BY: DDM

BOWMAN, BARRETT & ASSOCIATES INC.
CONSULTING ENGINEERS
Chicago, Illinois
312.228.0100
www.bbandainc.com

F.A.I.	SECTION	COUNTY	TOTAL SHEETS	SHEET NO.
94/90 *		COOK	565	144
STA.		TO STA.		
FED. ROAD DIST. NO.	ILLINOIS	FED. AID PROJECT		

62301 * (2021-922 PT2 ETC 2324.6-1P)R-10

SCHEDULE OF DRAINAGE STRUCTURES

STR. NUMBER	STATION	OFFSET	RIM ELEV.	CATCH BASIN TA 4 DIA T1F OL	CATCH BASIN TA 4 DIA T8G	CATCH BASIN TA 4 DIA T20F&G	CATCH BASIN TA 4 DIA T24F&G	CATCH BASIN TC T20F&G	CATCH BASIN TC T24F&G	MANHOLE TA 4 DIA T1F CL	INVERT ELEVATIONS	TEMP. SOIL RET. SYS.	ROCK EXCAVATION
32-05	4548+37.69	76.0' RT	3.69			1					-1.9N,		
32-06	4548+72.56	79.0' RT	3.47			1					-2.35N, -2.25S,		
32-07	4548+93.36	80.8' RT	3.44	1							-2.66W, -2.56S, -2.56N , -1.96SE,		
32-08	4548+95.10	60.9' RT	3.82	1							-4.96W, -2.86E, -4.96SE,		
32-09	4547+35.18	71.0' RT	6.99		1						0.17SW,		
32-10	4548+85.16	84.1' RT	5.28		1						-1.67NW,		
33-01	4549+07.43	82.1' RT	3.45			1					-2.42S, -2.32N,		
33-02	4549+57.24	86.4' RT	3.76			1					-1.82S,		
33-03	4550+61.84	95.6' RT	5.71			1					-5.67NW, 0.53SE,		
33-04	4551+05.00	52.4' RT	-0.36			1					-7.71W, -7.31SE,		
33-05	4551+85.00	50.8' RT	-0.33			1					-7.17W,		
33-06	4550+65.00	53.0' RT	-1.62			1					-6.84N, -6.74E,		
33-07	4550+02.00	63.0' RT	3.88							1	-4.4N, -4.4S,		
33-08	4550+54.02	98.9' RT	5.27		1						0.61NW,		
34-01	4554+00.00	46.9' RT	-4.52			1					-10.06W, -9.96N,		
34-02	4554+15.00	47.1' RT	-4.65			1					-9.81S,		
34-03	4555+13.00	48.0' RT	-5.12			1					-11.45N,		
34-04	4555+28.06	48.2' RT	-5.14			1					-11.7W, -11.6S, -11.6N,		
34-05	4555+43.00	48.1' RT	-5.13			1					-11.45S, -11.35N,		
34-06	4555+66.00	48.2' RT	-5.09			1					-11.12S,		
34-07	4555+95.00	48.2' RT	-4.99			1					-10.39W,		
34-08	4556+85.00	47.7' RT	-4.30			1					-9.9W,		
34-09	4558+30.00	47.0' RT	-2.55			1					-7.73W,		
35-01	4560+30.71	105.7' RT	8.21			1					-4.49W,		
35-02	4560+25.00	47.0' RT	-0.75			1					-7.16W, -5.96E,		
35-03	4562+79.22	78.4' RT	-0.52			1					-8.79NW,		
35-04	4563+18.96	74.2' RT	-1.16			1					-9.29SW, -9.19SE, -9.19NW,		
35-05	4563+16.96	54.3' RT	-0.78			1					-9.59SW, -9.49NE,		
35-06	4563+15.00	47.0' RT	-0.83			1					-9.76W, -9.66NE,		
35-07	4563+93.60	67.6' RT	-1.87			1					-8.44SE,		
35-08	4561+78.00	107.0' RT	8.88							1	-6N, -6SW,		
36-01	4564+93.33	62.0' RT	-2.81			1					-8.75N,		
36-02	4565+22.29	61.0' RT	-3.10			1					-9.15W, -9.05S,		
36-03	4566+82.34	59.6' RT	-4.86			1					-9.97N,		
36-04	4567+08.27	58.8' RT	-5.02			1					-10.33W, -10.23S,		
36-05	4567+73.23	56.6' RT	-5.20			1					-10.64N,		
36-06	4567+89.94	56.0' RT	-5.20			1					-10.9W, -10.8S, -10.8N,		
36-07	4568+05.00	55.5' RT	-5.18			1					-10.65S,		
36-08	4568+45.00	55.0' RT	-5.09			1					-10.86W,		4.27
37-01	4569+55.40	55.0' RT	-4.21			1					-9.88N,		4.48
37-02	4570+45.44	57.1' RT	-2.88			1					-10.88W, -10.78S, -10.78N, FALSE		5.99
37-03	4571+45.26	63.1' RT	-1.33			1					-9.78S,		
37-04	4572+50.06	69.5' RT	-0.02			1					-6.64W, -6.54NE,		
37-05	4572+65.04	70.4' RT	0.14			1					-6.39S,		
37-06	4572+95.00	49.8' RT	0.77	1							-5.03N,		

CONTINUED ON NEXT SHEET

BOWMAN, BARRETT & ASSOCIATES INC.
CONSULTING ENGINEERS
Chicago, Illinois
312.228.0100
www.bbandainc.com

DS-13

REVISIONS NAME	DATE
REVISED	6/23/06
ADDENDUM 2	8/04/06

ILLINOIS DEPARTMENT OF TRANSPORTATION
F.A.I. 94/90 (DAN RYAN EXPRESSWAY)
GARFIELD BLVD TO 31ST STREET (NB LOCAL LANES)
DRAINAGE SCHEDULES
PROPOSED STRUCTURES

SCALE: 1"=N.T.S DRAWN BY: JAM
DATE: 06/09/06 CHECKED BY: DDM

N:\BBOND\BBOWN\8\SHEETS\BD_IBDSCH01.dgn 10:56:17 AM 8/4/2006

SCHEDULE OF DRAINAGE STRUCTURES

STR. NUMBER	STATION	OFFSET	RIM ELEV.	CATCH BASIN TA 4 DIA T1F OL	CATCH BASIN TA 4 DIA T8G	CATCH BASIN TA 4 DIA T20F&G	CATCH BASIN TA 4 DIA T24F&G	CATCH BASIN TC T20F&G	CATCH BASIN TC T24F&G	MANHOLE TA 4 DIA T1F CL	INVERT ELEVATIONS	TEMP. SOIL RET. SYS.	ROCK EXCAVATION
37-07	4573+54.87	75.8' RT	0.86			1					-5.24W,		
37-08	4573+56.08	55.9' RT	1.24			1					-5.54W, -5.44E,		
37-09	4573+55.00	46.9' RT	1.26			1					-5.73N, -5.63S, -5.63E,		
38-01	4574+19.75	79.8' RT	1.19			1					-5.62NW, -5.52NE,		
38-02	4574+25.00	47.8' RT	1.40			1					-6.53W, -6.43S, -6.43SE,		
38-03	4574+99.53	85.2' RT	1.45			1					-4.72SW, -4.62NW,		
38-04	4575+00.99	65.2' RT	1.83			1					-4.42SE,		
38-05	4576+14.23	93.5' RT	1.79			1					-6.07W, -5.97NE,		
38-06	4576+15.00	47.0' RT	0.82			1					-7.33W, -7.23E,		
38-07	4576+29.19	94.6' RT	1.84			1					-5.82SW,		
38-08	4577+58.85	104.0' RT	2.23			1					-8.75W, -8.65NE,		
38-09	4577+56.00	47.0' RT	-0.70			1					-10.28W, -10.18E, -6NE, -5.88SE,		
38-10	4577+73.81	105.1' RT	2.27			1					-8.5SW, -8.4NW,		
38-11	4577+75.26	85.2' RT	2.65			1					-8.2SE,		
38-12	4578+05.00	55.2' RT	-0.06							1	-5.5S,		
38-13	4577+48.50	51.0' RT	-0.59		1						-5.79NW,		
39-01	4579+65.00	47.0' RT	-4.42			1					-11.64W,		
39-02	4581+45.00	47.0' RT	-6.11			1					-11.36W,		
39-03	4581+75.00	47.0' RT	-6.17			1					-13.62W, -13.37N,		
39-04	4581+87.53	47.0' RT	-6.17			1					-13.24S, -13.14N,		
39-05	4582+05.00	47.0' RT	-6.18			1					-12.97S,		
39-06	4583+25.78	48.2' RT	-5.44			1					-10.68W, -10.58NE,		
39-07	4583+33.42	52.6' RT	-3.63		1						-10.49NE,		
40-01	4584+36.53	55.9' RT	-4.03			1					-10.47W, -10.37NE,		
40-02	4585+27.18	63.8' RT	-2.15	2		1					-9.46NW, -9.36SW,		
40-03	4585+22.50	41.2' RT	-1.91	1							-9.13SE,		
40-04	4586+16.84	71.7' RT	-0.13	2		1					-5.38NW, -5.28NE,		
40-05	4586+20.00	46.2' RT	0.14	1							-5.73W, -5.63E,		
40-06	4586+52.70	74.8' RT	0.72			1					-4.92SW, -4.82NW,		
40-07	4586+54.44	54.9' RT	1.10			1					-4.62SE, -4.52W,		
40-08	4586+55.00	47.0' RT	0.77			1					-4.44E,		
40-09	4588+20.00	47.0' RT	4.24			1					-0.9W,		
41-01	4589+42.00	47.0' RT	6.38			1					0.95N,		
41-02	4590+10.00	47.0' RT	7.41			1					0.17W, 0.27S,		
41-03	4591+85.00	47.0' RT	9.56			1					4.38W,		
41-04	4593+35.00	47.0' RT	10.81			1					5.68W,		
42-01	4594+45.00	47.0' RT	11.38			1					5.74W,		
42-02	4597+75.00	47.0' RT	11.32			1					5.8W,		
42-03	4598+75.00	47.0' RT	10.78			1					5.59W,		
43-01	4600+25.00	47.0' RT	9.52			1					2.98W, 3.08N,		
43-02	4600+65.05	52.9' RT	8.86			1					3.65W,		
43-03	4600+64.00	47.0' RT	9.10			1					3.5S, 3.6E,		
43-04	4602+09.72	63.0' RT	6.83			1					1.65W,		
44-01	4604+04.66	58.1' RT	3.77			1					-4.48W, -4.38N,		
44-02	4605+04.62	55.6' RT	1.77			1					-3.38S,		

CONTINUED ON NEXT SHEET

DS-14

REVISIONS NAME	DATE
REVISED	6/22/06
2 ADDENDUM 2	8/04/06

ILLINOIS DEPARTMENT OF TRANSPORTATION

F.A.I. 94/90 (DAN RYAN EXPRESSWAY)

GARFIELD BLVD TO 31ST STREET (NB LOCAL LANES)

DRAINAGE SCHEDULES

PROPOSED STRUCTURES

SCALE: 1"=N.T.S DRAWN BY: JAM

DATE: 06/09/06 CHECKED BY: DDM

BOWMAN, BARRETT & ASSOCIATES INC
CONSULTING ENGINEERS
Chicago, Illinois
312.228.0100
www.bbandainc.com

F.A.I.	SECTION	COUNTY	TOTAL SHEETS	SHEET NO.
94/90	*	COOK	565	146
STA.		TO STA.		
FED. ROAD DIST. NO.	ILLINOIS	FED. AID PROJECT		
62301	* (2021-922 PT2 ETC 2324.6-1P)R-10			

SCHEDULE OF DRAINAGE STRUCTURES

STR. NUMBER	STATION	OFFSET	RIM ELEV.	CATCH BASIN TA 4 DIA T1F OL	CATCH BASIN TA 4 DIA T8G	CATCH BASIN TA 4 DIA T20F&G	CATCH BASIN TA 4 DIA T24F&G	CATCH BASIN TC T20F&G	CATCH BASIN TC T24F&G	MANHOLE TA 4 DIA T1F CL	INVERT ELEVATIONS	TEMP. SOIL RET. SYS.	ROCK EXCAVATION
44-03	4606+04.59	53.1' RT	0.06			1					-5.14W,		
44-04	4607+19.56	50.3' RT	-1.22			1					-6.45N,		
44-05	4607+34.55	49.9' RT	-1.33			1					-6.7W, -6.6S,		
44-06	4608+14.54	48.2' RT	-1.73			1					-7.04W,		
44-07	4608+54.55	48.2' RT	-1.83			1					-6.91N,		
44-08	4608+70.57	48.2' RT	-1.85			1					-7.17W, -7.07S, -7.07N,		
44-09	4608+85.00	48.2' RT	-1.85			1					-6.93S,		
45-01	4609+85.00	48.2' RT	-1.51			1					-7.62W, -7.52N,		
45-02	4610+00.00	47.3' RT	-1.40			1					-7.37S,		
45-03	4611+42.84	47.0' RT	-0.14			1					-6.28N,		
45-04	4611+70.00	47.0' RT	0.12			1					-6.65W, -6.55S,		
45-05	4613+96.00	47.0' RT	2.09			1					-3.36W, -3.26N,		
46-01	4614+24.00	47.0' RT	2.23			1					-2.98S,		
46-02	4616+60.00	47.0' RT	2.18			1					-2.99NE,		
46-03	4616+66.07	52.9' RT	2.15			1					-3.17E, -3.07SW,		
46-04	4616+67.92	72.8' RT	1.77			1					-3.47N, -3.37W,		
46-05	4617+52.57	66.4' RT	1.17			1					-4.42W, -4.32S,		
46-06	4618+52.42	62.4' RT	0.29			1					-7.31N, -4.91SE,		
46-07	4618+45.05	66.7' RT	2.20		1						-4.83NW,		
47-01	4619+57.36	58.9' RT	-0.81			1					-8.46N, -8.36S,		
47-02	4619+72.37	59.0' RT	-0.99			1					-8.71W, -8.61S,		
47-03	4620+88.43	59.0' RT	-2.35			1					-15.18W,		
47-04	4621+77.48	59.0' RT	-3.38			1					-8.57N,		
47-05	4621+92.49	59.0' RT	-3.52			1					-8.82W, -8.72S, -8.72NE,		
47-06	4623+00.00	59.0' RT	-4.03			1					-9.49N,		
47-07	4623+09.70	59.0' RT	-4.03			1					-9.68W, -9.58S, -9.58N, -9.28NE,		
47-08	4623+25.00	59.0' RT	-4.02			1					-9.43S,		
47-09	4622+00.01	63.0' RT	-1.96		1						-8.63NE,		
47-10	4623+17.50	63.0' RT	-2.15		1						-9.2SW,		
48-01	4624+34.17	59.0' RT	-3.43			1					-8.78W, -8.68N,		
48-02	4624+49.23	59.0' RT	-3.26			1					-8.53S, -8.43N,		
48-03	4625+39.36	61.4' RT	-2.25			1					-7.53S, -7.43N,		
48-04	4625+54.30	62.8' RT	-2.11			1					-7.28S, -7.18NE,		
48-05	4626+53.92	71.5' RT	-1.12			1					-7.84W, -7.74NE,		
48-06	4626+94.77	75.0' RT	-0.68			1					-7.33SW, -5.39N,		
48-07	4628+08.34	85.0' RT	0.64			1					-4.27NE,		
48-08	4628+23.29	86.2' RT	0.90			1					-4.42W, -4.42SW,		
48-09	4628+24.98	66.3' RT	1.28			1					-4.39E, -4.29NW,		
48-10	4628+25.00	58.3' RT	0.56			1					-4.21SE,		
48-11	4625+61.43	67.4' RT	-0.20		1						-7.1SW,		
49-01	4631+00.00	59.0' RT	-0.25			1					-5.39W,		
49-02	4632+65.00	59.0' RT	-1.86			1					-7.02W,		
50-01	4634+10.00	59.0' RT	-3.26			1					-8.46W,		
50-02	4635+40.00	61.5' RT	-4.49			1					-9.82W, -9.72SE,		
50-03	4636+35.00	66.3' RT	-4.96			1					-10.76N,		
50-04	4636+48.13	66.3' RT	-4.95			1					-11W, -10.9S, -10.9N,		
50-05	4636+70.00	66.3' RT	-4.91			1					-10.68S, -10.58N,		
50-06	4637+61.00	68.4' RT	-4.45			1					-9.67S,		
50-07	4637+60.00	5.1' LT	-4.22			1					-8.43NW,	162	
50-08	4635+32.50	65.3' RT	-2.74		1						-9.64SE,		
31-13	4540+45.00	108.6' RT	13.00		1						8.58SE,		
31-14	4541+71.00	94.9' RT	12.50		1						6.93SE,		
31-15	4242+60.00	90.3' RT	12.50		1						6.24SE,		

CONTINUED ON NEXT SHEET

BOWMAN, BARRETT & ASSOCIATES INC.
CONSULTING ENGINEERS
Chicago, Illinois
312.228.0100
www.bbandainc.com

DS-15

REVISIONS NAME	DATE
REVISED	6/22/06
ADDENDUM 2	8/04/06

ILLINOIS DEPARTMENT OF TRANSPORTATION

F.A.I. 94/90 (DAN RYAN EXPRESSWAY)

GARFIELD-BLVD TO 31ST STREET (NB LOCAL LANES)

DRAINAGE SCHEDULES

PROPOSED STRUCTURES

SCALE: 1"=N.T.S DRAWN BY: JAM

DATE: 06/09/06 CHECKED BY: DDM

F.A.I.	SECTION	COUNTY	TOTAL SHEETS	SHEET NO.
94/90	*	COOK	565	146A
STA.		TO STA.		
FED. ROAD DIST. NO.	ILLINOIS	FED. AID PROJECT		

62301 * (2021-922 PT2 ETC 2324.6-1P)R-10

SCHEDULE OF DRAINAGE STRUCTURES

STR. NUMBER	STATION	OFFSET	RIM ELEV.	CATCH BASIN TA 4 DIA T1F OL	CATCH BASIN TA 4 DIA T8G	CATCH BASIN TA 4 DIA T20F&G	CATCH BASIN TA 4 DIA T24F&G	CATCH BASIN TC T20F&G	CATCH BASIN TC T24F&G	MANHOLE TA 4 DIA T1F CL	INVERT ELEVATIONS	TEMP. SOIL RET. SYS.	ROCK EXCAVATION
31-16	4542+18.00	7.5' LT	10.71	1							5.51SE,		
34-10	4558+21.00	3.8' LT	-2.66								-9.85S, -8.25NE,		
35-09	4559+14.41	118.4' RT	12.63			1					5.93SNW,		
48-12	4626+77.00	51.2' RT	-0.53	1							-5.93SE, -5.83N		
48-13	4627+27+00	53.6' RT	-0.05	1							-5.33S,		
			TOTALS	16	16	187	15	5	1	7		8173	36.2

DS-15A

REVISIONS	
NAME	DATE
ADDENDUM 2	8/04/06

ILLINOIS DEPARTMENT OF TRANSPORTATION

F.A.I. 94/90 (DAN RYAN EXPRESSWAY)

GARFIELD-BLVD TO 31ST STREET (NB LOCAL LANES)

DRAINAGE SCHEDULES

PROPOSED STRUCTURES

SCALE: 1"=N.T.S DRAWN BY: JAM

DATE: 06/09/06 CHECKED BY: DDM

BOWMAN, BARRETT & ASSOCIATES INC.
CONSULTING ENGINEERS
Chicago, Illinois
312.228.0100
www.bbandainc.com

N:\66Dcontr\CONTR\SHEETS\DEGL\RDSCH\DJ01

8/4/2006 IVA3.35 AW

F.A.I.	SECTION	COUNTY	TOTAL SHEETS	SHEET NO.
94/90	*	COOK	565	148
STA.		TO STA.		
FED. ROAD DIST. NO.	ILLINOIS	FED. AID PROJECT		
62301	* (2021-922 PT2 ETC 2324.6-1P)R-10			

SCHEDULE OF STORM SEWERS

FROM STR. NO.	TO STR. NO.	LENGTH (FEET)	DIAMETER (INCHES)	SLOPE (%)	SS CL A 2, 12	SS CL A 2, 15	SS WMQP, 12	TRENCH BACKFILL (CU. YD.)	ROCK EXCAVATION
29-04	14-29-09	63.7	12	1.00%	63.7			72.9	
29-03	29-04	121.0	12	1.00%	121.0			84.2	
29-07	29-03	4.5	12	1.00%	4.5			2.2	
29-05	14-28-14	73.7	12	1.00%	73.7			17.3	
29-02	29-01	10.5	12	1.00%	10.5			1.3	
29-01	29-05	131.6	12	1.00%	131.6			14.6	
29-06	29-05	4.3	12	1.00%	4.3			0.4	
30-01	14-29-14	64.0	12	1.00%	64.0			11.0	
30-04	14-30-01	68.6	12	1.00%	68.6			29.1	
30-03	30-04	6.0	12	2.50%	6.0			1.5	
30-02	30-03	18.0	12	1.00%	18.0			1.4	
30-07	14-30-05	73.5	12	1.00%	73.5			52.5	
30-06	30-07	6.7	12	2.50%	6.7			5.2	
30-05	30-06	18.0	12	1.00%	18.0			15.6	
30-08	14-30-05	24.5	12	1.00%	24.5			3.2	
30-18	14-30-09	25.3	12	1.00%	25.3			9.9	
30-17	30-18	48.8	12	1.00%	48.8			7.5	
30-14	30-17	47.0	12	1.00%	47.0			7.2	
30-10	30-12	17.3	12	1.00%	17.3			1.4	
30-12	30-14	11.2	12	1.00%	11.2			1.1	
30-11	30-12	18.0	12	1.00%	18.0			2.1	
30-09	30-11	17.6	12	1.00%	17.6			2.2	
30-13	30-11	11.5	12	1.00%	11.5			1.4	
30-16	30-17	2.6	12	1.00%	2.6			0.1	
30-15	30-16	18.0	12	1.00%	18.0			1.8	
30-19	30-15	16.0	12	1.00%	16.0			1.8	
31-03	14-30-14	27.7	12	1.00%	27.7			8.0	
31-02	31-03	47.7	12	1.00%	47.7			7.6	
31-01	31-02	22.0	12	1.00%	22.0			2.2	
31-04	31-01	11.0	12	1.00%	11.0			0.8	
31-07	14-30-17	30.6	12	1.00%	30.6			25.1	
31-06	31-07	47.5	12	1.00%	47.5			7.6	
31-05	31-06	19.9	12	1.00%	19.9			1.9	
31-08	31-05	51.1	12	1.00%	51.1			4.9	
31-09	14-30-22	70.1	12	1.00%	70.1			13.6	
31-10	31-09	27.2	12	1.00%	27.2			2.7	
31-11	14-31-01	60.6	12	1.00%	60.6			11.1	
31-12	14-31-04	58.2	12	1.00%	58.2			8.6	
32-01	14-31-06	57.5	12	1.00%	57.5			6.2	
32-02	14-31-11	57.9	12	1.00%	57.9			9.9	
32-04	14-31-16	71.3	12	1.00%	71.3			9.3	
32-03	32-04	11.0	12	1.00%	11.0			0.8	
32-09	32-04	4.5	12	1.00%	4.5			0.5	
32-08	14-32-01	66.0	15	0.35%		66.0		29.1	
32-07	32-08	18.0	15	1.00%		18.0		3.3	

SCHEDULE OF STORM SEWERS

FROM STR. NO.	TO STR. NO.	LENGTH (FEET)	DIAMETER (INCHES)	SLOPE (%)	SS CL A 2, 12	SS CL A 2, 15	SS WMQP, 12	TRENCH BACKFILL (CU. YD.)	ROCK EXCAVATION
32-06	32-07	16.9	12	1.00%	16.9			2.4	
32-05	32-06	31.0	12	1.00%	31.0			3.8	
32-10	32-07	4.8	12	1.00%	4.8			0.6	
33-01	32-07	10.1	12	1.00%	10.1			1.3	
33-02	33-01	46.0	12	1.00%	46.0			5.9	
33-04	14-32-05	56.9	12	1.00%	56.9			18.5	
33-06	33-04	43.0	12	1.00%	43.0			7.3	
33-03	33-06	39.7	12	2.50%	39.7			15.3	
33-08	33-03	4.5	12	1.00%	4.5			0.2	
33-05	14-32-09	55.3	12	1.00%	55.3			11.5	
34-02	34-01	11.0	12	1.00%	11.0			0.9	
34-01	14-32-13	51.5	12	1.00%	51.5			7.0	
34-04	14-33-07	52.8	15	1.00%		52.8		12.9	
34-03	34-04	11.0	12	1.00%	11.0			1.9	
34-05	34-04	10.9	12	1.00%	10.9			1.9	
34-06	34-05	18.9	12	1.00%	18.9			3.1	
34-07	14-33-14	51.4	12	1.00%	51.4			6.6	
34-08	14-33-18	52.2	2 12	1.00%	52.2			7.6	
34-09	34-10	47.6	12	1.00%	47.6	2		4.7	2
35-02	14-34-01	51.6	12	1.00%	51.6			6.9	
35-01	35-02	55.9	12 2	2.50%	55.9			40.3	
35-06	14-34-05	51.5	12	1.00%	51.5			38.5	
35-05	35-06	3.5	12	1.00%	3.5			1.3	
35-04	35-05	18.0	12	1.00%	18.0			6.9	
35-03	35-04	36.0	12	1.00%	36.0			13.5	
35-07	35-04	70.9	12	1.00%	70.9			21.0	
36-02	14-34-10	65.8	12	1.00%	65.8			13.9	
36-01	36-02	26.0	12	1.00%	26.0			3.9	
36-04	14-35-01	63.3	12	1.00%	63.3			8.2	
36-03	36-04	22.0	12	1.00%	22.0			1.6	
36-06	14-35-08	60.6	12	1.00%	60.6			10.1	
36-05	36-06	12.7	12	1.00%	12.7			1.3	
36-07	36-06	11.1	12	1.00%	11.1			1.1	
36-08	14-35-15	59.6	12	1.00%	59.6			10.3	18.54
37-02	14-35-20	61.6	12	1.00%	61.6			24.5	25.96
37-01	37-02	86.1	12	1.00%	86.1			21.0	29.91
37-03	37-02	96.0	12	1.00%	96.0			37.3	38.12
37-04	14-36-01	74.0	12	1.00%	74.0			20.3	
37-05	37-04	11.0	12	1.00%	11.0			2.1	
38-02	EX P	49.8	12	1.00%	49.8			19.0	
37-09	38-02	66.0	12	1.00%	66.0			20.2	
37-06	37-09	56.1	12	1.00%	56.1			11.0	
37-08	37-09	5.0	12	1.00%	5.0			0.9	
37-07	37-08	18.0	12	1.00%	18.0			3.4	
38-01	38-02	29.4	12	2.50%	29.4			8.5	

SCHEDULE OF STORM SEWERS

FROM STR. NO.	TO STR. NO.	LENGTH (FEET)	DIAMETER (INCHES)	SLOPE (%)	SS CL A 2, 12	SS CL A 2, 15	SS WMQP, 12	TRENCH BACKFILL (CU. YD.)	ROCK EXCAVATION
38-03	38-01	76.0	12	1.00%	76.0			15.8	
38-04	38-03	18.0	12	1.00%	18.0			3.0	
38-06	14-36-08	49.4	12	1.00%	49.4			20.0	
38-05	38-06	43.5	12	2.50%	43.5			15.6	
38-07	38-05	11.0	12	1.00%	11.0			3.2	
38-09	14-36-09	49.4	12	1.00%	49.4			42.1	
38-08	38-09	54.1	12	2.50%	54.1			49.7	
38-10	38-08	11.0	12	1.00%	11.0			9.7	
38-11	38-10	18.0	12	1.00%	18.0			16.9	
38-13	38-09	4.5	12	1.00%	4.5			0.2	
39-01	14-37-01	51.6	12	1.00%	51.6			15.8	
39-02	14-37-06	51.6	12	1.00%	51.6			5.5	
39-03	14-37-10	51.2	15	1.00%		51.2		17.5	
39-04	39-03	8.5	12	1.00%	8.5			2.0	
39-05	39-04	13.5	12	1.00%	13.5			3.1	
39-06	14-37-20	52.7	12	1.00%	52.7			5.5	
39-07	39-06	4.8	12	1.00%	4.8			0.5	
40-01	14-38-01	60.4	12	1.00%	60.4			14.2	
40-02	40-01	87.0	12	1.00%	87.0			21.6	
40-03	40-02	20.0	12	1.00%	20.0			5.4	
40-05	14-38-05	49.7	2 12	1.00%	49.7	2		8.1	2
40-04	40-05	22.7	12	1.00%	22.7			2.4	
40-06	40-04	32.0	12	1.00%	32.0			3.1	
40-07	40-06	18.0	12	1.00%	18.0			2.1	
40-08	40-07	3.9	12	1.00%	3.9			0.2	
40-09	14-38-09	51.6	12	1.00%	51.6			5.0	
41-02	14-39-01	51.6	12	1.00%	51.6			16.0	
41-01	41-02	64.0	12	1.00%	64.0			12.3	
41-03	14-39-05	51.6	12	1.00%	51.6			6.0	
41-04	14-39-09	51.6	12	1.00%	51.6			4.9	
42-01	14-39-13	51.6	12	1.00%	51.6			7.6	
42-02	14-40-01	51.6	12	1.00%	51.6			6.9	
42-03	14-40-05	50.7	12	1.00%	50.7			5.2	
43-01	14-40-09	51.6	12	1.00%	51.6			12.2	
43-03	43-01	38.0	12	1.00%	38.0			6.1	
43-02	43-03	1.7	12	1.00%	1.7			0.0	
43-04	14-41-01	67.6	12	1.00%	67.6			8.6	
44-01	14-41-05	62.7	12	1.00%	62.7			26.5	
44-02	44-01	96.0	12	1.00%	96.0			22.2	
44-03	14-41-09	57.7	12	1.00%	57.7			6.0	
44-05	14-41-13	54.5	12	1.00%	54.5			6.3	
44-04	44-05	11.0	12	1.00%	11.0			0.8	
44-06	14-42-01	52.8	12	1.00%	52.8			5.7	
44-08	14-42-10	51.8	12	1.00%	51.8			5.9	
44-07	44-08	12.0	12	1.00%	12.0			0.8	

DS-17

REVISIONS	
NAME	DATE
REVISED	6/22/06
2 ADDENDUM 2	8/04/06

ILLINOIS DEPARTMENT OF TRANSPORTATION

F.A.I. 94/90 (DAN RYAN EXPRESSWAY)

GARFIELD BLVD TO 31ST STREET (NB LOCAL LANES)

DRAINAGE SCHEDULES

PROPOSED STORM SEWER PIPES

SCALE: 1"=N.T.S DRAWN BY: JAM

DATE: 06/09/06 CHECKED BY: DDM

BOWMAN, BARRETT & ASSOCIATES INC.
CONSULTING ENGINEERS
Chicago, Illinois
312.228.0100
www.bbandainc.com

CONTINUED ON NEXT SHEET

F.A.I.	SECTION	COUNTY	TOTAL SHEETS	SHEET NO.
94/90	*	COOK	565	149
STA.		TO STA.		
FED. ROAD DIST. NO.	ILLINOIS	FED. AID PROJECT		

62301 * (2021-922 PT2 ETC 2324.6-1P)R-10

SCHEDULE OF STORM SEWERS

FROM STR. NO.	TO STR. NO.	LENGTH (FEET)	DIAMETER (INCHES)	SLOPE (%)	SS CL A 2, 12	SS CL A 2, 15	SS WMQP, 12	TRENCH BACKFILL (CU. YD.)	ROCK EXCAVATION
44-09	44-08	10.4	12	1.00%	10.4			0.7	
45-01	14-42-12	52.8	12	1.00%	52.8			10.2	
45-02	45-01	11.0	12	1.00%	11.0			1.5	
45-04	14-42-17	51.6	12	1.00%	51.6			13.5	
45-03	45-04	23.2	12	1.00%	23.2			4.5	
45-05	14-42-21	51.5	12	1.00%	51.5			6.6	
46-01	45-05	24.0	12	1.00%	24.0			2.0	
46-05	14-43-01	71.0	12	1.00%	71.0			12.2	
46-04	46-05	80.9	12	1.00%	80.9			7.9	
46-03	46-04	18.0	12	1.00%	18.0			1.4	
46-02	46-03	4.4	12	1.00%	4.4			0.2	
47-02	14-43-05	63.6	12	1.00%	63.6			23.8	
47-01	47-02	11.0	12	1.00%	11.0			3.2	
46-06	47-01	101.0	12	1.00%	101.0			33.0	
46-07	46-06	4.4	12	1.00%	4.4			0.5	
47-03	14-44-01	63.5	12	1.00%	63.5			95.7	
47-05	14-44-03	63.2	12	1.00%	63.2			8.4	
47-04	47-05	11.0	12	1.00%	11.0			0.8	
47-09	47-05	4.5	12	1.00%	4.5			0.5	
47-07	14-44-08	63.5	15	1.00%		63.5		10.4	
47-06	47-07	5.7	12	1.00%	5.7			0.5	
47-08	47-07	11.3	12	1.00%	11.3			1.1	
47-10	47-07	4.8	12	1.00%	4.8			0.6	
48-01	14-44-17	63.6	12	1.00%	63.6			8.8	
48-02	48-01	11.1	12	1.00%	11.1			0.8	
48-03	48-02	86.2	12	1.00%	86.2			7.2	
48-04	48-03	11.0	12	1.00%	11.0			0.7	
48-11	48-04	4.5	12	1.00%	4.5			0.5	
48-05	14-45-01	76.0	12 △2	1.00%	76.0			21.8 △2	
48-06	48-05	37.0	12	1.00%	37.0			8.2	
EX P	48-06	15.2	12	1.00%	15.2			0.4	
48-08	EX P	11.8	12	1.00%	11.8			1.2	
48-07	48-08	11.0	12	1.00%	11.0			0.7	
48-09	EX P	5.3	12	1.00%	5.3			0.5	
48-10	48-09	4.1	12	1.00%	4.1			0.2	
49-01	14-45-05	63.6	12	1.00%	63.6			7.4	
49-02	14-46-01	63.6	12	1.00%	63.6			7.6	
50-01	14-46-05	63.6	12	1.00%	63.6			7.8	
50-02	14-46-09	64.9	12	1.00%	64.9			9.0	
50-08	50-02	4.4	12	1.00%	4.4			0.5	
50-04	14-46-16	68.4	15	1.00%		68.4		14.8	
50-03	50-04	9.1	12	1.00%	9.1			1.1	
50-05	50-04	17.9	12	1.00%	17.9			2.5	
50-06	50-05	87.0	12	1.00%	87.0			9.2	
31-13	31-05	39.0	12	1.00%	39.0			2.3	
31-14	31-09	32.7	12	1.00%	32.7			6.7	
31-15	31-11	34.7	12	1.00%	34.7			7.9	
31-16	14-31-01	47.7	12	1.00%	47.7			4.1	

SCHEDULE OF STORM SEWERS

FROM STR. NO.	TO STR. NO.	LENGTH (FEET)	DIAMETER (INCHES)	SLOPE (%)	SS CL A 2, 12	SS CL A 2, 15	SS WMQP, 12	TRENCH BACKFILL (CU. YD.)	ROCK EXCAVATION
34-10	14-33-18	130.7	15	0.44%		130.7		30.1	
35-09	35-01	113.0	12	2.50%	113.0			17.9	
48-12	48-05	26.7	12	1.00%	26.7			2.2	
48-13	48-12	46.1	12	1.00%	46.1			4.1	
				TOTALS	8785	558	49	2381	164.8

SCHEDULE OF DUCTILE IRON PIPE*

STATION	TO STATION	OFFSET	CONNECTING STRUCTURE	DUCTILE IRON PIPE (FT)
4529+65.4	4529+70.0	RT	29-05	12.5
4582+32.2	4582+06.3	LT	14-37-17	34.0
4583+18.6	4583+26.3	LT	14-37-20	15.8
4608+95.8	4608+85.0	RT	44-09	19.0
4609+71.8	4609+85.0	RT	45-01	21.5
4622+37.1	4622+00.0	RT	47-09	45.1
4622+94.2	4623+00.0	RT	47-06	14.8
4635+53.6	4635+40.0	RT	50-02	23.1
4636+29.7	4636+35.0	RT	50-03	13.6
			TOTAL	200

*NOTE: FOR PROPOSED DUCTILE IRON PIPE LOCATIONS SOUTH OF 47TH STREET SEE PLAN SHEETS.

DS-18

REVISIONS	
NAME	DATE
REVISED	6/22/06
△2 ADDENDUM 2	8/04/06

ILLINOIS DEPARTMENT OF TRANSPORTATION

F.A.I. 94/90 (DAN RYAN EXPRESSWAY)

GARFIELD BLVD TO 31ST STREET (NB LOCAL LANES)

DRAINAGE SCHEDULES

PROPOSED STORM SEWER PIPES

SCALE: 1"=N.T.S DRAWN BY: JAM

DATE: 06/09/06 CHECKED BY: DDM

BOWMAN, BARRETT & ASSOCIATES INC.
CONSULTING ENGINEERS
Chicago, Illinois
312.228.0100
www.bbandainc.com

N:\BBD\bdd\CIVIL\SHEETS\660_DDS.DGN 12/31/06 PM 8/4/2006

SCHEDULE OF PIPE UNDERDRAINS 6"

STATION	TO STATION	OFFSET	PIPE UNDERDRAINS 6" (FT)	CONNECTING STRUCTURE	PIPE UNDERDRAINS 6" SPECIAL (FT)
6032+64.4	6031+65.4	RT	94.0	44-09	5.0
6032+79.4	6032+65.4	RT	9.0	45-01	5.0
4611+41.8	4610+00.0	RT	136.8	45-02	5.0
4611+69.0	4611+42.8	RT	21.2	45-03	5.0
4613+95.0	4611+70.0	RT	220.0	45-04	5.0
4614+23.0	4613+96.0	RT	22.0	45-05	5.0
4615+36.2	4614+24.0	RT	107.2	46-01	5.0
4615+37.2	4616+60.0	RT	117.8	46-02	5.0
6004+18.9	6004+70.0	RT	46.1	46-04	5.0
6004+18.9	6004+68.0	LT	44.1	46-03	5.0
6004+71.0	6005+55.0	RT	79.0	46-05	5.0
6005+56.0	6006+55.0	RT	94.0	46-06	5.0
6006+56.0	6007+60.0	RT	99.0	47-01	5.0
6007+61.0	6007+75.0	RT	9.0	47-02	5.0
6007+76.0	6008+91.0	RT	110.0	47-03	5.0
6008+92.0	6009+80.0	RT	83.0	47-04	5.0
6009+81.0	6009+95.0	RT	9.0	47-05	5.0
4622+25.8	4621+92.5	RT	28.3	47-05	5.0
4622+29.8	4623+00.0	RT	65.2	47-06	5.0
4623+01.0	4623+09.7	RT	3.7	47-07	5.0
4623+24.0	4623+09.7	RT	9.3	47-07	5.0
4624+33.2	4623+25.0	RT	103.2	47-08	5.0
8000+29.0	8000+15.0	RT	9.0	48-01	5.0
8001+19.0	8000+30.0	RT	84.0	48-02	5.0
8001+34.0	8001+20.0	RT	9.0	48-03	5.0
8002+34.0	8001+35.0	RT	94.0	48-04	5.0
8002+75.0	8002+35.0	RT	35.0	48-05	5.0
8003+89.0	8002+76.0	RT	108.0	48-06	5.0
8004+04.0	8003+90.0	RT	9.0	48-07	5.0
8004+15.5	8004+05.0	RT	5.5	48-08	5.0
4629+16.2	4628+25.0	RT	86.2	48-10	5.0
4629+17.2	4631+00.0	RT	177.8	49-01	5.0
4631+01.0	4632+65.0	RT	159.0	49-02	5.0
4632+66.0	4634+10.0	RT	139.0	50-01	5.0
4634+11.0	4635+40.0	RT	124.0	50-02	5.0
4635+41.0	4636+35.0	RT	89.0	50-03	5.0
4636+36.0	4636+48.1	RT	7.1	50-04	5.0
4636+69.0	4636+48.1	RT	15.9	50-04	5.0
4637+60.0	4636+70.0	RT	85.0	50-05	5.0
4638+04.3	4637+61.0	RT	38.3	50-06	5.0
8043+91.2	8044+12.0	LT	15.8	37-08	5.0
4573+37.0	4573+55.0	RT	13.0	37-09	5.0
8004+15.1	8004+07.0	LT	3.1	48-09	5.0
4546+61.4	4545+75.5	LT	83.9		
4546+59.4	4546+61.4	RT/LT	71.7		
4546+74.4	4546+76.4	RT/LT	73.0		
4546+76.4	4547+35.5	LT	59.1		
		TOTALS	19828		1050

SCHEDULE OF PIPE UNDERDRAIN 12"

STATION	OFFSET	TO STATION	OFFSET	INVERT ELEV FROM	INVERT ELEV TO	PIPE UNDERDRAIN 12" (FT)	POROUS GRANULAR BACKFILL (CY)
4534+36.1	57.8' RT	4534+34.5	13.3' RT	-8.15	-8.84	69.1	78.26
4534+87.8	73.9' RT	4534+86.6	57.1' RT	-7.28	-7.45	14.9	40.94
4537+18.1	61.0' RT	4534+87.8	73.9' RT	-6.60	-7.18	234.8	601.87
4540+08.3	72.7' RT	4537+18.1	61.0' RT	-5.10	-6.60	301.4	678.53
4540+09.2	41.2' LT	4540+08.3	72.7' RT	-4.50	-5.10	111.9	207.30
4548+61.3	82.9' RT	4548+95.1	60.9' RT	-4.80	-4.96	38.3	30.83
4548+64.4	7.8' LT	4548+61.3	82.9' RT	-4.20	-4.80	88.7	62.54
4550+02.0	63.0' RT	4548+61.3	82.9' RT	-4.40	-4.80	139.7	114.95
4561+78.0	107.3' RT	4561+04.8	64.5' RT	-6.00	-6.52	82.8	115.80
4567+80.9	60.1' RT	4567+89.9	55.0' RT	-10.66	-10.74	7.9	2.93
4570+46.9	63.5' RT	4570+45.4	57.1' RT	-8.99	-10.78	4.6	3.73
4578+05.0	55.0' RT	4577+56.0	47.0' RT	-5.50	-6.00	47.6	15.43
4608+06.2	41.5' RT	4608+06.0	1.7' LT	-7.95	-8.16	41.2	8.34
4623+06.2	55.1' RT	4623+06.1	1.8' LT	-8.70	-8.97	54.9	3.80
4636+54.5	61.1' RT	4636+54.9	2.0' LT	-9.29	-9.60	61.1	2.71
					TOTAL	1299	1967.9

BOWMAN, BARRETT & ASSOCIATES INC.
CONSULTING ENGINEERS
Chicago, Illinois
312.228.0100
www.bbandainc.com

DS-21

REVISIONS	
NAME	DATE
REVISED	6/22/06
ADDENDUM 2	8/04/06

ILLINOIS DEPARTMENT OF TRANSPORTATION

F.A.I. 94/90 (DAN RYAN EXPRESSWAY)

GARFIELD BLVD TO 31ST STREET (NB LOCAL LANES)

DRAINAGE SCHEDULES

PROPOSED PIPE UNDERDRAIN

SCALE: 1"=N.T.S DRAWN BY: JAM

DATE: 06/09/06 CHECKED BY: DDM

F.A.I.	SECTION	COUNTY	TOTAL SHEETS	SHEET NO.
94/90	*	COOK	565	167
STA.		TO STA.		
FED. ROAD DIST. NO.	ILLINOIS	FED. AID PROJECT		

62301 • (2021-922 PT2 ETC 2324.6-1P)R-10

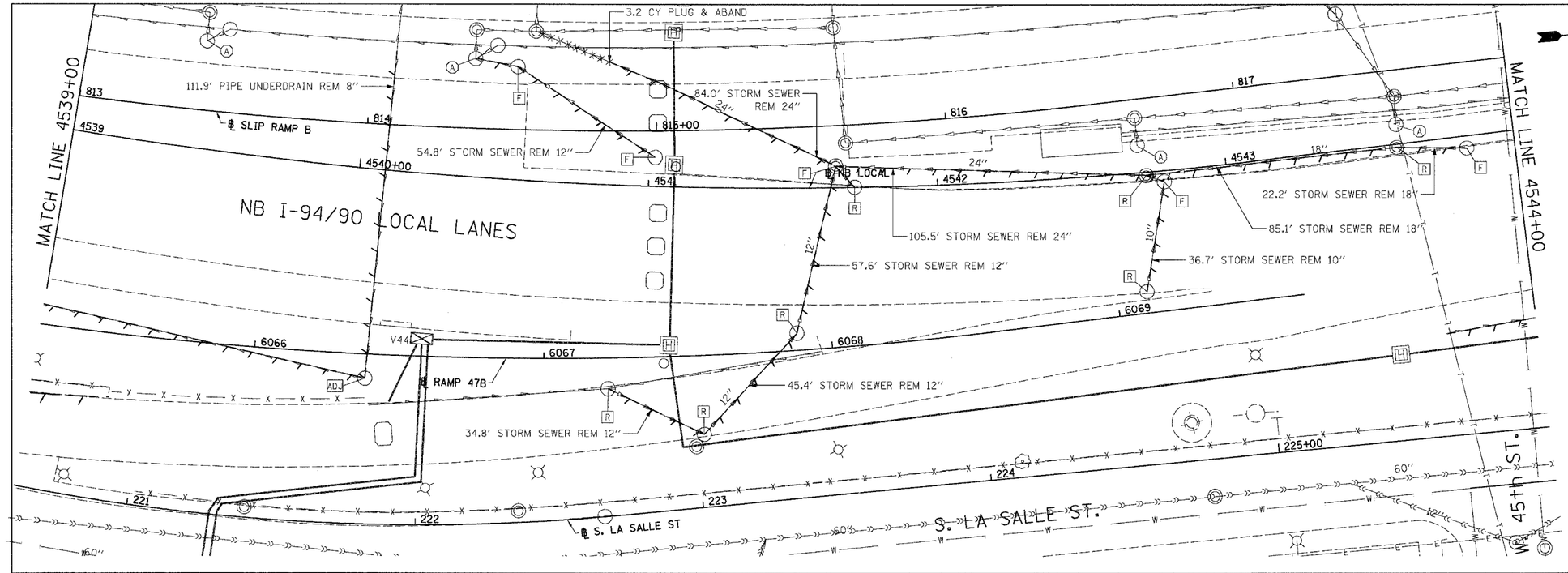

EXISTING CONDITIONS AND REMOVAL

PROPOSED IMPROVEMENTS

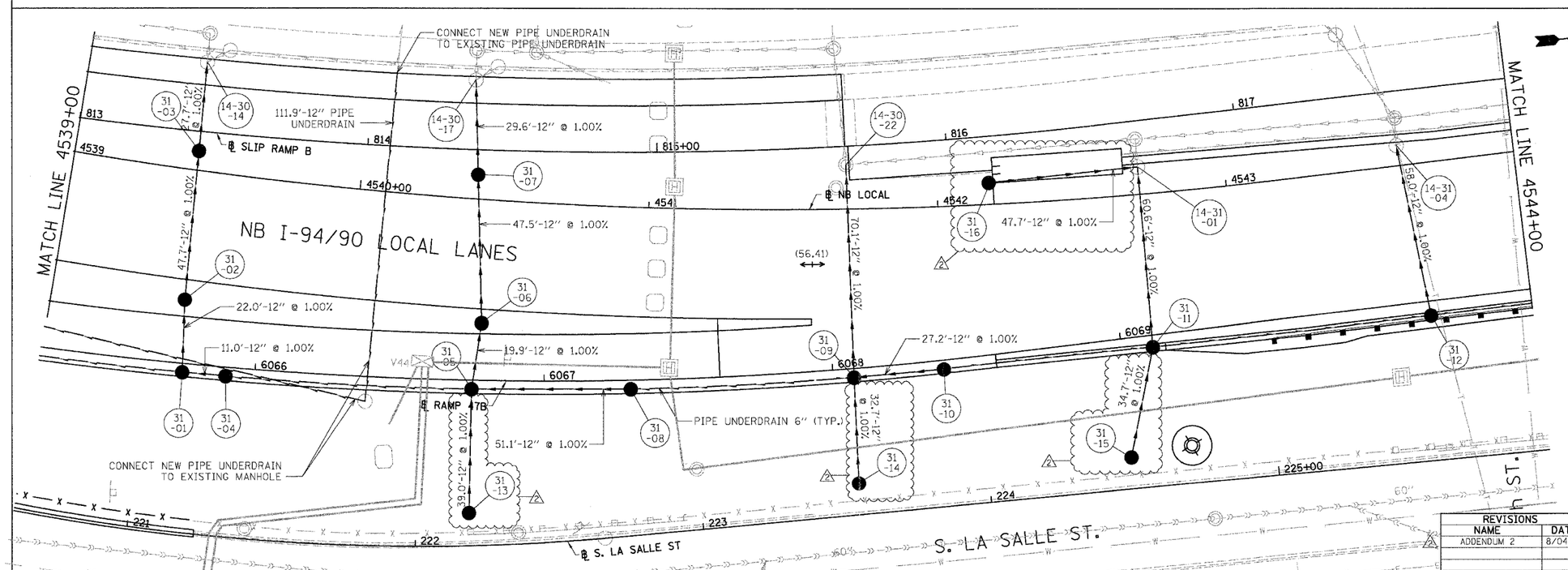

NOTES:

1. SEE DRAINAGE SCHEDULES FOR STRUCTURE, PIPE AND UNDERDRAIN INFORMATION.
2. THE LOCATION OF DRAINAGE STRUCTURES AND PIPES CONSTRUCTED IN PREVIOUS CONTRACTS IS BASED OFF OF CONTRACT PLAN DRAWINGS, THE CONTRACTOR MUST VERIFY LIMITS OF PREVIOUS CONSTRUCTION IN THE FIELD.

0 20' 40'

DU-31

REVISIONS	
NAME	DATE
ADDENDUM 2	8/04/06

ILLINOIS DEPARTMENT OF TRANSPORTATION

F.A.I. 94/90 (DAN RYAN EXPRESSWAY)

GARFIELD BLVD TO 31ST STREET (NB LOCAL LANES)

DRAINAGE AND UTILITY PLANS

SCALE: 1"=20'

DATE: 06/09/06

DRAWN BY: JAM

CHECKED BY: DDM

BOWMAN, BARRETT & ASSOCIATES INC.
CONSULTING ENGINEERS
Chicago, Illinois
312.228.0100
www.bbandainc.com

N:\660\cadd\DWG\INDASHEET\5660_DRDUPROD.dgn

8:32:04 AM

8/4/2006

F.A.I.	SECTION	COUNTY	TOTAL SHEETS	SHEET NO.
94/90	*	COOK	565	168
STA.		TO STA.		
FED. ROAD DIST. NO.	ILLINOIS	FED. AID PROJECT		

62301 * (2021-922 PT2 ETC 2324.6-1P)R-10

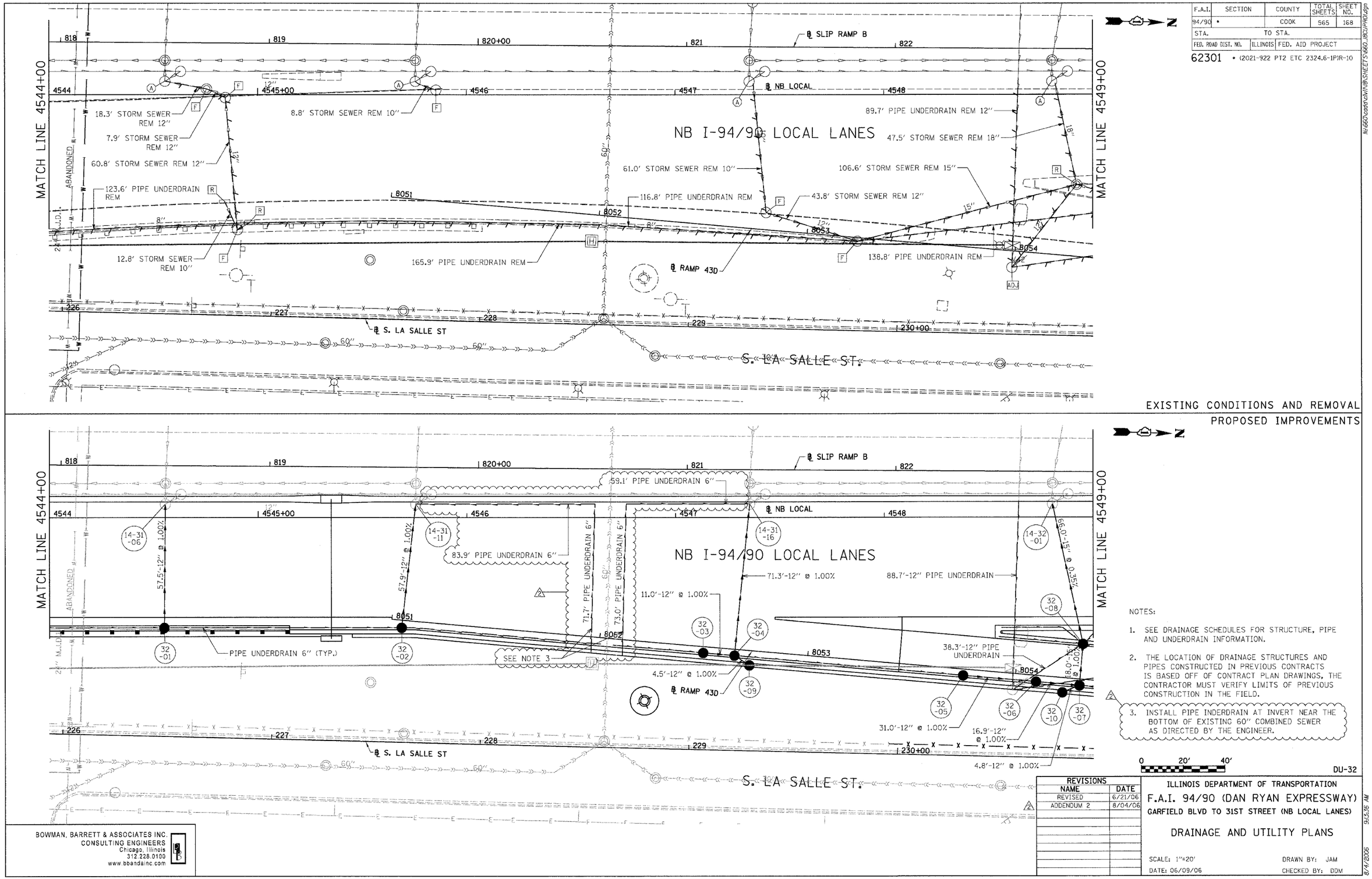

NOTES:

1. SEE DRAINAGE SCHEDULES FOR STRUCTURE, PIPE AND UNDERDRAIN INFORMATION.
2. THE LOCATION OF DRAINAGE STRUCTURES AND PIPES CONSTRUCTED IN PREVIOUS CONTRACTS IS BASED OFF OF CONTRACT PLAN DRAWINGS, THE CONTRACTOR MUST VERIFY LIMITS OF PREVIOUS CONSTRUCTION IN THE FIELD.
3. INSTALL PIPE INDERDRAIN AT INVERT NEAR THE BOTTOM OF EXISTING 60" COMBINED SEWER AS DIRECTED BY THE ENGINEER.

0 20' 40'

DU-32

REVISIONS	
NAME	DATE
REVISED	6/21/06
ADDENDUM 2	8/04/06

ILLINOIS DEPARTMENT OF TRANSPORTATION

F.A.I. 94/90 (DAN RYAN EXPRESSWAY)

GARFIELD BLVD TO 31ST STREET (NB LOCAL LANES)

DRAINAGE AND UTILITY PLANS

SCALE: 1"=20' DRAWN BY: JAM

DATE: 06/09/06 CHECKED BY: DDM

BOWMAN, BARRETT & ASSOCIATES INC.
CONSULTING ENGINEERS
Chicago, Illinois
312.228.0100
www.bbandainc.com

N:\660\cadd\dn\IVB\SHEETS\660_DEDU-PR01.dgn

8/4/2006 9:33:35 AM

F.A.I.	SECTION	COUNTY	TOTAL SHEETS	SHEET NO.
94/90	•	COOK	565	170
STA.		TO STA.		
FED. ROAD DIST. NO.	ILLINOIS	FED. AID PROJECT		

62301 • (2021-922 PT2 ETC 2324.6-1P)R-10

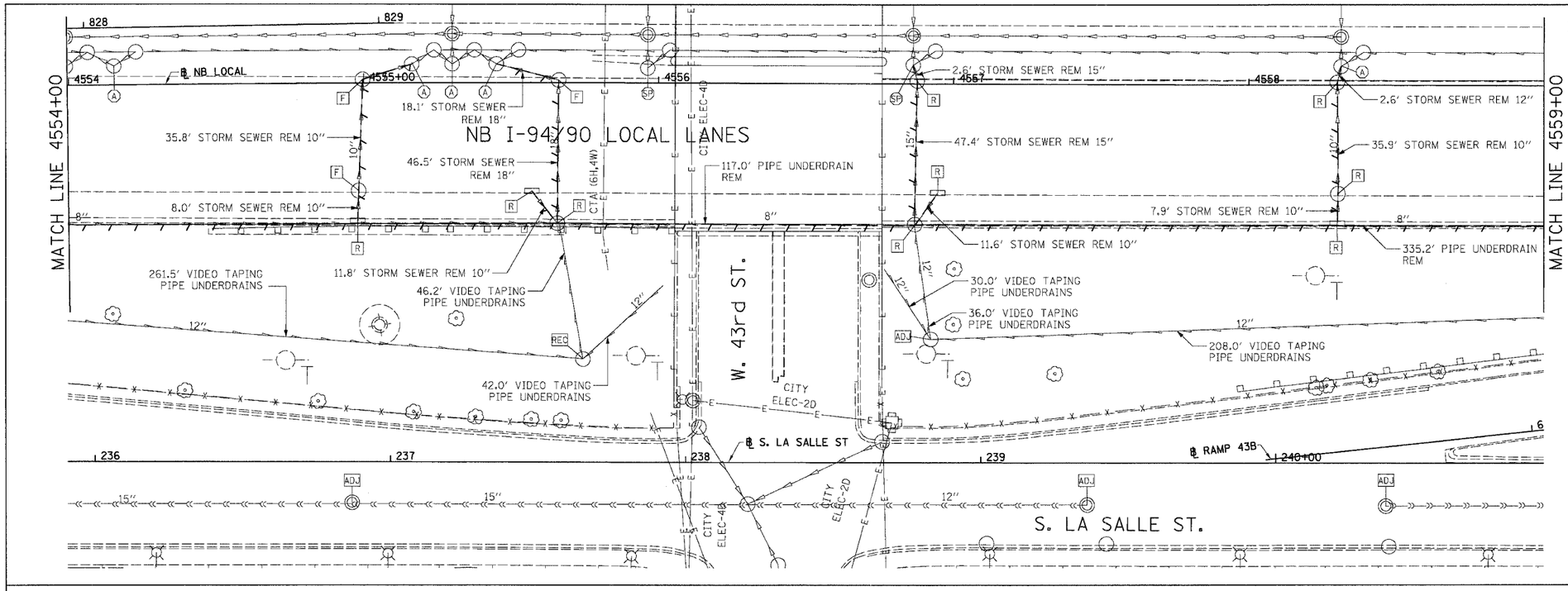

EXISTING CONDITIONS AND REMOVAL

PROPOSED IMPROVEMENTS

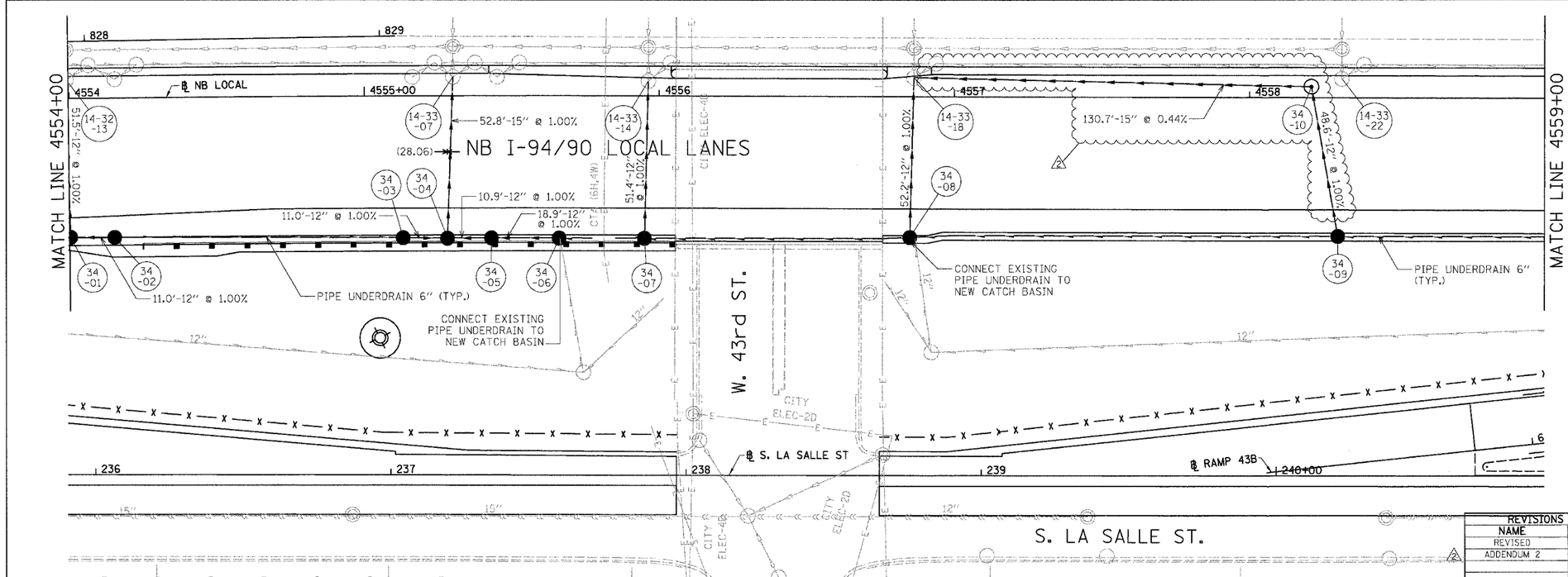

NOTES:

1. SEE DRAINAGE SCHEDULES FOR STRUCTURE, PIPE AND UNDERDRAIN INFORMATION.
2. THE LOCATION OF DRAINAGE STRUCTURES AND PIPES CONSTRUCTED IN PREVIOUS CONTRACTS IS BASED OFF OF CONTRACT PLAN DRAWINGS, THE CONTRACTOR MUST VERIFY LIMITS OF PREVIOUS CONSTRUCTION IN THE FIELD.

0 20' 40'

DU-34

REVISIONS	
NAME	DATE
REVISED	6/23/06
ADDENDUM 2	8/04/06

ILLINOIS DEPARTMENT OF TRANSPORTATION

F.A.I. 94/90 (DAN RYAN EXPRESSWAY)

GARFIELD BLVD TO 31ST STREET (NB LOCAL LANES)

DRAINAGE AND UTILITY PLANS

SCALE: 1"=20'

DATE: 06/09/06

DRAWN BY: JAM

CHECKED BY: DDM

BOWMAN, BARRETT & ASSOCIATES INC.
CONSULTING ENGINEERS
Chicago, Illinois
312.228.0100
www.bbandainc.com

N:\660\cadd\MVP\SHEETS\660_UBD1PROL.dgn

10:52:29 AM

8/4/2006

F.A.I.	SECTION	COUNTY	TOTAL SHEETS	SHEET NO.
94/90	*	COOK	565	171
STA.		TO STA.		
FED. ROAD DIST. NO.	ILLINOIS	FED. AID PROJECT		

62301 * (2021-922 PT2 ETC 2324.6-1P)R-10

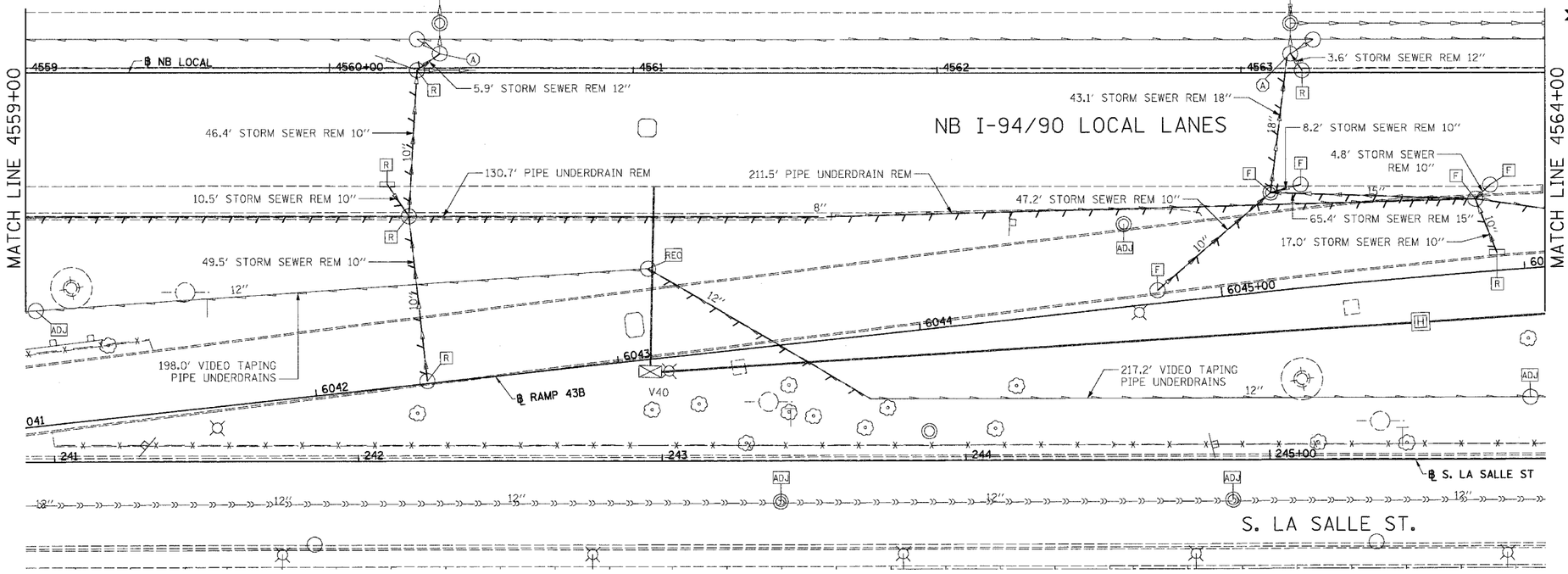

EXISTING CONDITIONS AND REMOVAL

PROPOSED IMPROVEMENTS

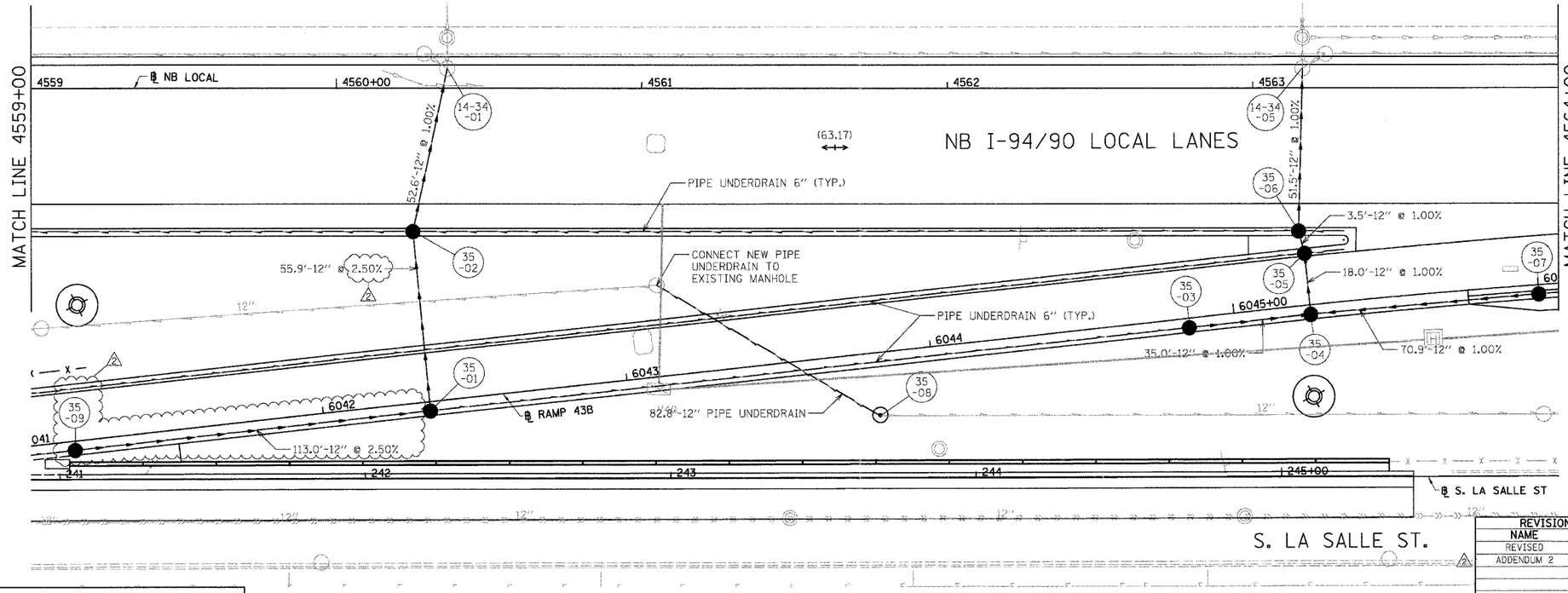

NOTES:

1. SEE DRAINAGE SCHEDULES FOR STRUCTURE, PIPE AND UNDERDRAIN INFORMATION.
2. THE LOCATION OF DRAINAGE STRUCTURES AND PIPES CONSTRUCTED IN PREVIOUS CONTRACTS IS BASED OFF OF CONTRACT PLAN DRAWINGS. THE CONTRACTOR MUST VERIFY LIMITS OF PREVIOUS CONSTRUCTION IN THE FIELD.

0 20' 40'

DU-35

REVISIONS	
NAME	DATE
REVISED	6/23/06
ADDENDUM 2	8/04/06

ILLINOIS DEPARTMENT OF TRANSPORTATION

F.A.I. 94/90 (DAN RYAN EXPRESSWAY)

GARFIELD BLVD TO 31ST STREET (NB LOCAL LANES)

DRAINAGE AND UTILITY PLANS

SCALE: 1"=20' DRAWN BY: JAM

DATE: 06/09/06 CHECKED BY: DDM

BOWMAN, BARRETT & ASSOCIATES INC.
CONSULTING ENGINEERS
Chicago, Illinois
312.228.0100
www.bbandainc.com

N:\680\cadd\civil\DSHEETS\680_DDUP10.dgn

8/4/2006 8:33:04 AM

F.A.I.	SECTION	COUNTY	TOTAL SHEETS	SHEET NO.
94/90	•	COOK	565	184
STA.		TO STA.		
FED. ROAD DIST. NO.	ILLINOIS	FED. AID PROJECT		

62301 • (2021-922 PT2 ETC 2324.6-1P)R-10

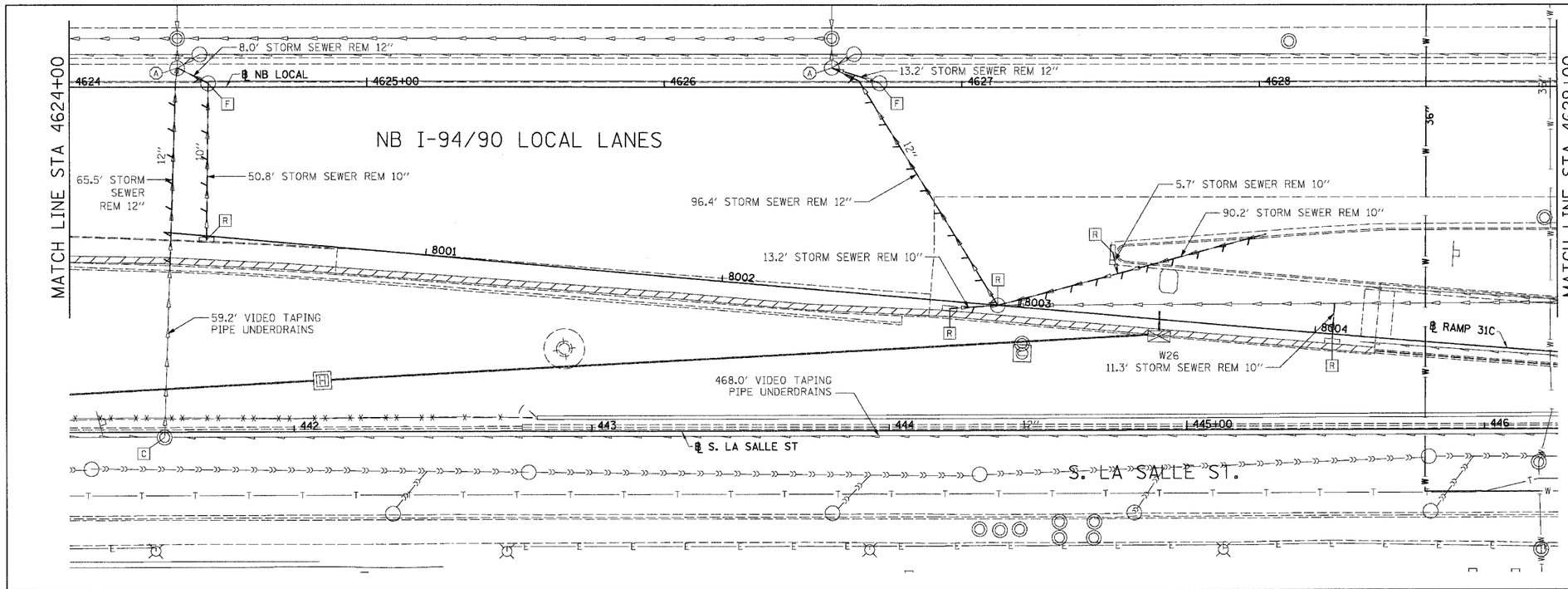

EXISTING CONDITIONS AND REMOVAL

PROPOSED IMPROVEMENTS

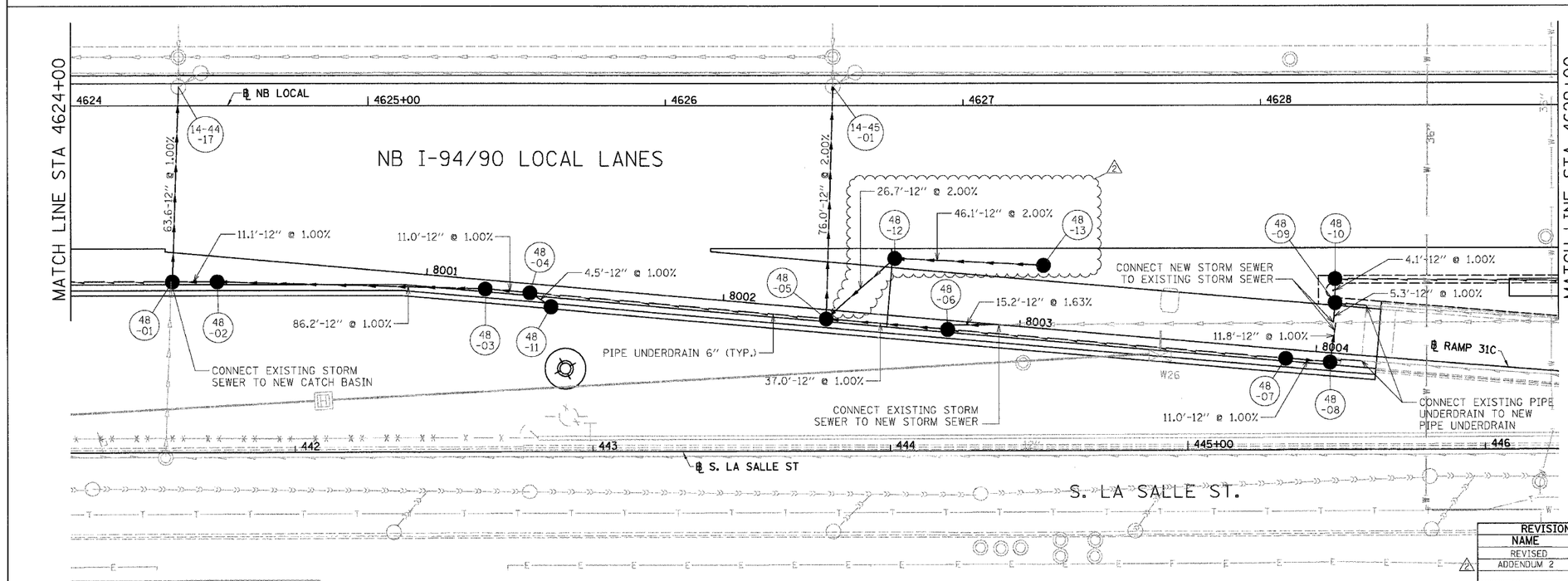

NOTES:

1. SEE DRAINAGE SCHEDULES FOR STRUCTURE, PIPE AND UNDERDRAIN INFORMATION.
2. THE LOCATION OF DRAINAGE STRUCTURES AND PIPES CONSTRUCTED IN PREVIOUS CONTRACTS IS BASED OFF OF CONTRACT PLAN DRAWINGS, THE CONTRACTOR MUST VERIFY LIMITS OF PREVIOUS CONSTRUCTION IN THE FIELD.

0 20' 40'

DU-48

REVISIONS	
NAME	DATE
REVISED	6/22/06
ADDENDUM 2	8/04/06

ILLINOIS DEPARTMENT OF TRANSPORTATION

F.A.I. 94/90 (DAN RYAN EXPRESSWAY)

GARFIELD BLVD TO 31ST STREET (NB LOCAL LANES)

DRAINAGE AND UTILITY PLANS

SCALE: 1"=20'

DATE: 06/09/06

DRAWN BY: JAM

CHECKED BY: DDM

BOWMAN, BARRETT & ASSOCIATES INC.
CONSULTING ENGINEERS
Chicago, Illinois
312.228.0100
www.bbandainc.com

N:\680\acad\civil\NB\SHEETS\680_BCUPRO2.dgn

8:33:59 AM

8/4/2006

F.A.I.	SECTION	COUNTY	TOTAL SHEETS	SHEET NO.
94/90	*	COOK	565	213
STA.	TO STA.			
FED. ROAD DIST. NO.	ILLINOIS	FED. AID PROJECT		

62301 * (2021-922 PT2 ETC 2324.6-1P) R-10

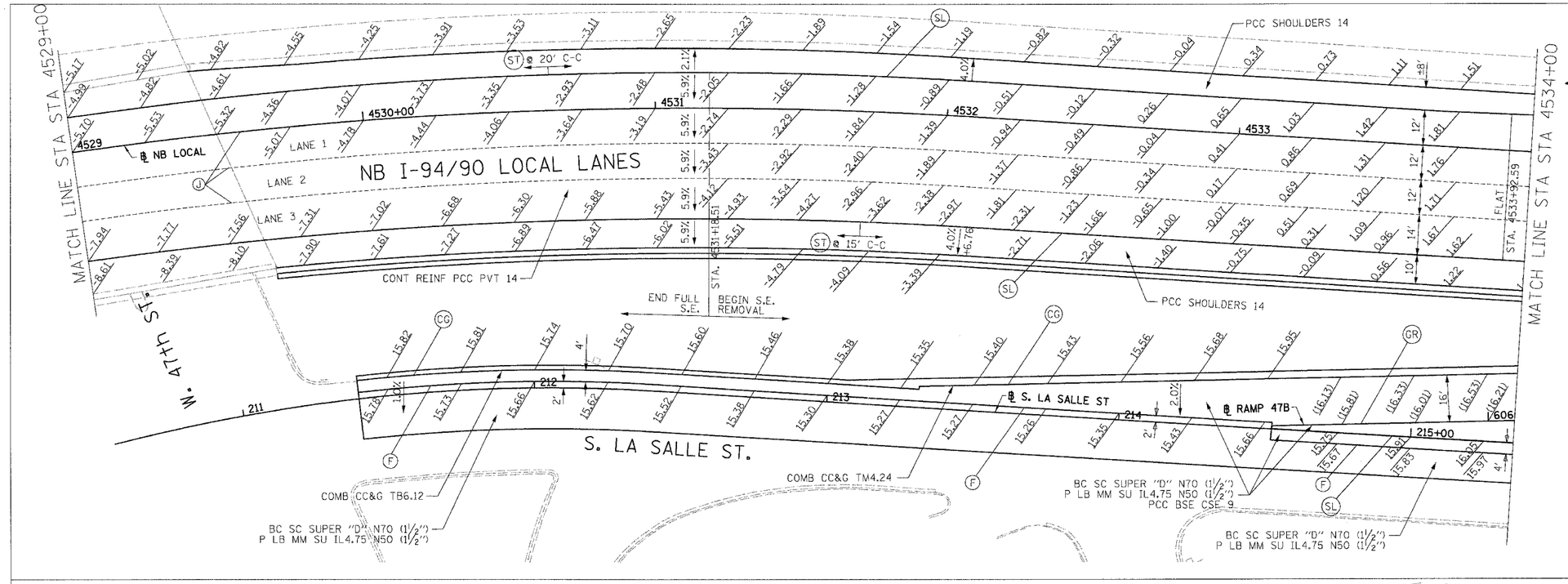

LEGEND:

- (CG) LONGITUDINAL CONSTRUCTION JOINT PER STANDARD 606001 WITH DRILLED & GROUTED 24" LONG TIE BARS
- (C) SAWED TRANSVERSE CONTRACTION JOINT PER STANDARD 420001 WITH HOT POUR SEAL
- (EX) TRANSVERSE EXPANSION JOINT PER STANDARD 420001
- (GR) NO BARS, KEYED LONGITUDINAL CONSTRUCTION JOINT WITH ALL KEYS FACING ONE DIRECTION ALONG INSIDE EDGE OF RAMP PAVEMENT AND SURROUNDING SHOULDER GORE
- (F) LONGITUDINAL CONSTRUCTION JOINT WITH DRILLED & GROUTED #8 DEFORMED EPOXY COATED TIE BARS, 24" LONG AT 24" C-C
- (J) LONGITUDINAL SAWED JOINT PER STANDARD 420001.

  LONGITUDINAL CONSTRUCTION JOINT PER STANDARD 420001 EXCEPT FOR DRILLED & GROUTED 24" LONG #8 TIE BARS. SEAL PER ASTM D 3405
- (SL) LONGITUDINAL CONSTRUCTION JOINT PER STANDARD 483001 EXCEPT FOR DRILLED & GROUTED 30" LONG #8 TIE BARS
- (ST) SAWED TRANSVERSE SHOULDER CONTRACTION JOINT PER STANDARD 483001 (MATCH RAMP PAVEMENT JOINTS IN GORE AREAS)
  - SPACED 15' C-C ALONG OUTSIDE SHOULDER
  - SPACED 20' C-C AT ALL OTHER LOCATIONS

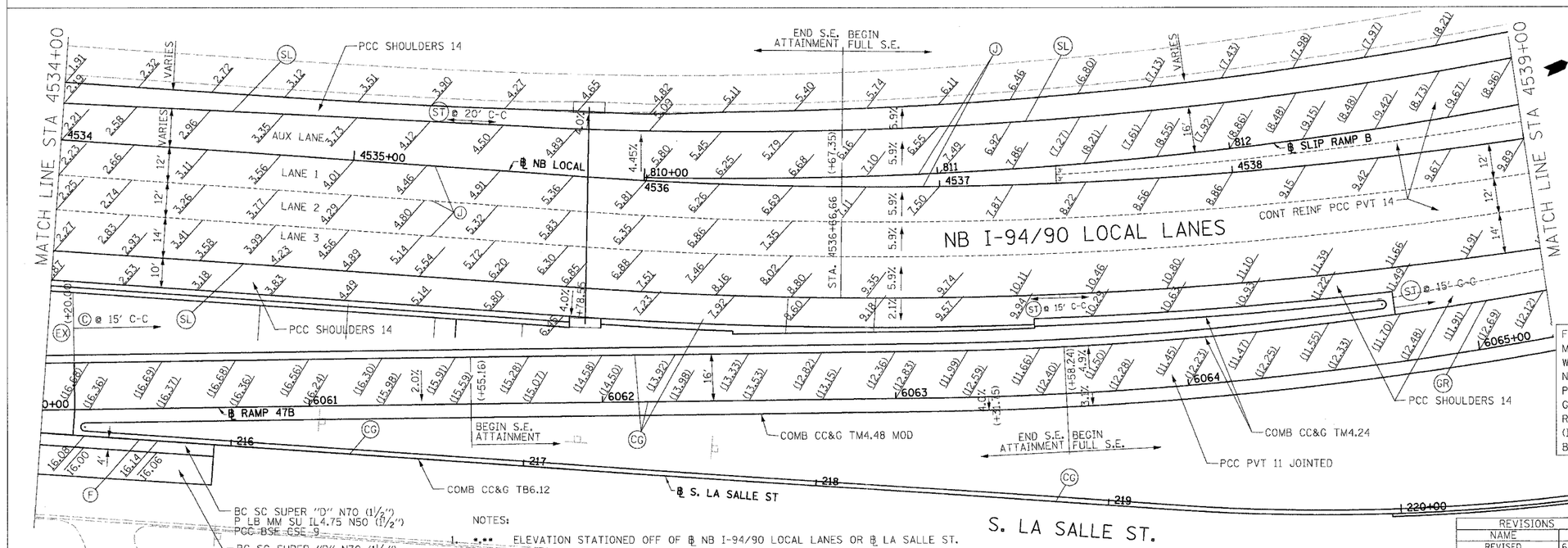

SLIP RAMP SWALE ELEVATIONS		
STA	OFFSET	ELEVATION
4537+40	3.0 LT	8.02
+50	3.2 LT	8.15
+75	3.6 LT	8.47
4538+00	4.1 LT	8.77
+25	4.5 LT	9.06
+50	5.0 LT	9.31
+75	5.4 LT	9.55

SWALE ELEVATIONS		
STA	OFFSET	ELEVATION
4538+50	47.9 RT	11.45
+75	47.1 RT	11.72

FOR PARTIAL WIDTH FRONTAGE ROAD IMPROVEMENTS, EITHER MATCH TRANSVERSE JOINT SPACING OF EXISTING PAVEMENT WITH NEWLY INSTALLED TRANSVERSE JOINTS OR PLACE NEWLY INSTALLED TRANSVERSE JOINTS AT 15'-0" INTERVALS. PLACE NEWLY INSTALLED TRANSVERSE JOINTS AT THE GREATER OF THESE TWO INTERVALS. SEE DETAIL SHEETS RDT-18A AND RDT-18B FOR PCC BASE COURSE JOINT DETAILS. (INCLUDED IN THE COST OF 'PORTLAND CEMENT CONCRETE BASE COURSE 9")

0 20' 40'

JE-7

NOTES:

1. *.** ELEVATION STATIONED OFF OF ℄ NB I-94/90 LOCAL LANES OR ℄ LA SALLE ST.
2. (*.**) ELEVATION STATIONED OFF OF RAMP ALIGNMENT
3. SEE ALIGNMENT AND TIES SHEETS FOR CURVE INFORMATION
4. SEE ROADWAY PLAN SHEETS FOR BEGINNING AND END TAPER STATIONS AND TAPER RATES.
5. PAVEMENT ELEVATIONS ALONG EDGE OF PAVEMENTS, EDGE OF SHOULDERS, GORES, RAMPS AND IN AREAS OF SUPERELEVATION TRANSITION ARE PROVIDED AT 25' INTERVALS, FOR ALL ELEVATIONS, REFER TO THE PROFILES AND TYPICAL SECTIONS.
6. SEE ROADWAY DETAIL RDT-8 FOR THE TYING OF THE MEDIAN BARRIER BASE TO THE PCC SHOULDER.

REVISIONS	
NAME	DATE
REVISED	6/23/06
ADDENDUM 2	8/04/06

ILLINOIS DEPARTMENT OF TRANSPORTATION

F.A.I. 94/90 (DAN RYAN EXPRESSWAY)

GARFIELD BLVD TO 31ST STREET (NB LOCAL LANES)

PAVEMENT JOINTING AND ELEVATION PLANS

SCALE: 1"=20' DRAWN BY: JDC

DATE: 06/09/06 CHECKED BY: RS

BOWMAN, BARRETT & ASSOCIATES INC.
CONSULTING ENGINEERS
Chicago, Illinois
312.228.0100
www.bbandainc.com

N:\GEO\cadd\civil\0\SHEETS\660_JEC_JE7.dgn

8/4/2006 12:15:39 PM

F.A.I.	SECTION	COUNTY	TOTAL SHEETS	SHEET NO.
94/90 *		COOK	565	214
STA.		TO STA.		
FED. ROAD DIST. NO.	ILLINOIS	FED. AID PROJECT		

62301 * (2021-922 PT2 ETC 2324.6-1P) R-10

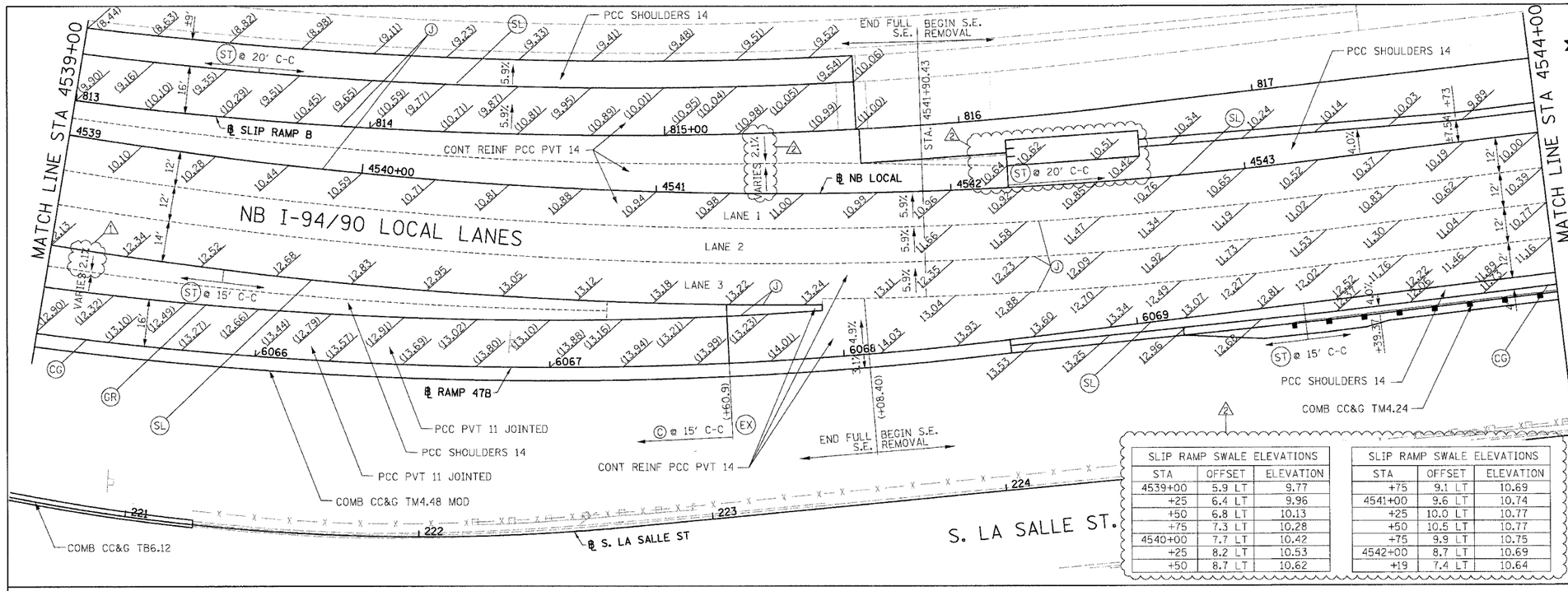

SLIP RAMP SWALE ELEVATIONS		
STA	OFFSET	ELEVATION
4539+00	5.9 LT	9.77
+25	6.4 LT	9.96
+50	6.8 LT	10.13
+75	7.3 LT	10.28
4540+00	7.7 LT	10.42
+25	8.2 LT	10.53
+50	8.7 LT	10.62

SLIP RAMP SWALE ELEVATIONS		
STA	OFFSET	ELEVATION
+75	9.1 LT	10.69
4541+00	9.6 LT	10.74
+25	10.0 LT	10.77
+50	10.5 LT	10.77
+75	9.9 LT	10.75
4542+00	8.7 LT	10.69
+19	7.4 LT	10.64

LEGEND:

- (CG) LONGITUDINAL CONSTRUCTION JOINT PER STANDARD 606001 WITH DRILLED & GROUTED 24" LONG TIE BARS
- (C) SAWED TRANSVERSE CONTRACTION JOINT PER STANDARD 420001 WITH HOT POUR SEAL
- (EX) TRANSVERSE EXPANSION JOINT PER STANDARD 420001
- (GR) NO BARS, KEYED LONGITUDINAL CONSTRUCTION JOINT WITH ALL KEYS FACING ONE DIRECTION ALONG INSIDE EDGE OF RAMP PAVEMENT AND SURROUNDING SHOULDER GORE
- (F) LONGITUDINAL CONSTRUCTION JOINT WITH DRILLED & GROUTED #8 DEFORMED EPOXY COATED TIE BARS, 24" LONG AT 24" C-C
- (J) LONGITUDINAL SAWED JOINT PER STANDARD 420001.

  LONGITUDINAL CONSTRUCTION JOINT PER STANDARD 420001 EXCEPT FOR DRILLED & GROUTED 24" LONG #8 TIE BARS. SEAL PER ASTM D 3405
- (SL) LONGITUDINAL CONSTRUCTION JOINT PER STANDARD 483001 EXCEPT FOR DRILLED & GROUTED 30" LONG #8 TIE BARS
- (ST) SAWED TRANSVERSE SHOULDER CONTRACTION JOINT PER STANDARD 483001 (MATCH RAMP PAVEMENT JOINTS IN GORE AREAS)
  - SPACED 15' C-C ALONG OUTSIDE SHOULDER
  - SPACED 20' C-C AT ALL OTHER LOCATIONS

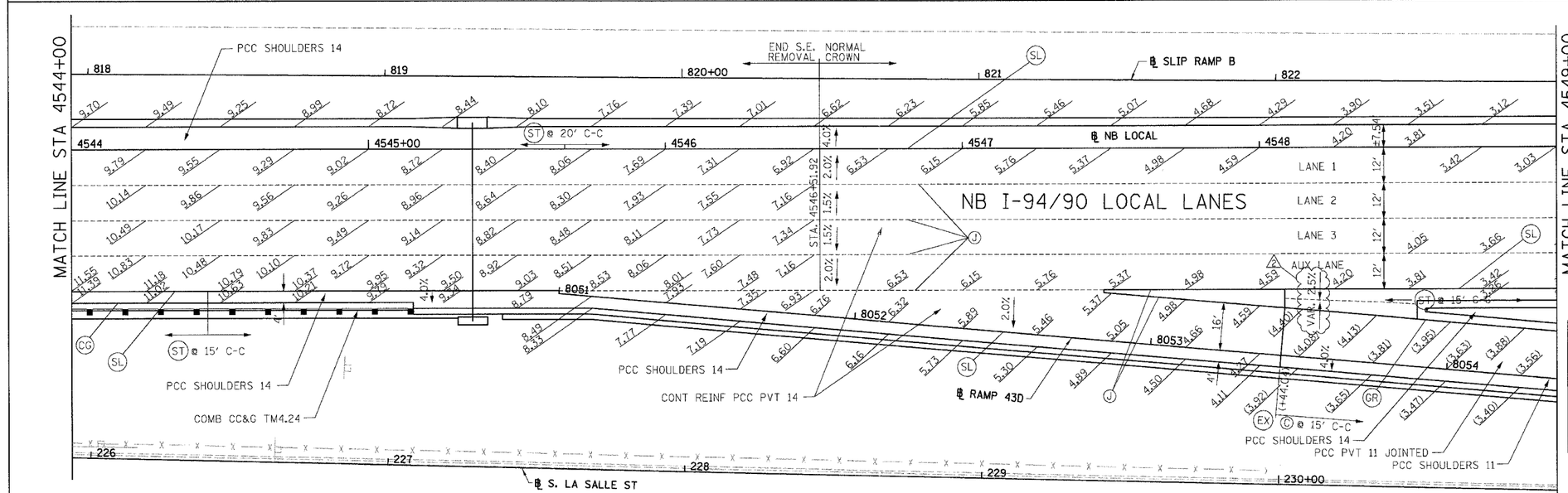

SWALE ELEVATIONS		
STA	OFFSET	ELEVATION
4539+00	46.4 RT	11.95
+25	45.7 RT	12.18
+50	45.0 RT	12.37
+75	44.2 RT	12.55
4540+00	43.5 RT	12.71
+25	42.8 RT	12.85
+50	42.1 RT	12.96
+75	41.4 RT	13.05
+85	41.2 RT	13.09

SWALE ELEVATIONS		
STA	OFFSET	ELEVATION
4548+08	51.2 RT	4.38
+25	52.1 RT	4.10
+50	53.6 RT	3.67
+53	53.8 RT	3.54

FOR PARTIAL WIDTH FRONTAGE ROAD IMPROVEMENTS, EITHER MATCH TRANSVERSE JOINT SPACING OF EXISTING PAVEMENT WITH NEWLY INSTALLED TRANSVERSE JOINTS OR PLACE NEWLY INSTALLED TRANSVERSE JOINTS AT 15'-0" INTERVALS. PLACE NEWLY INSTALLED TRANSVERSE JOINTS AT THE GREATER OF THESE TWO INTERVALS. SEE DETAIL SHEETS RDT-18A AND RDT-18B FOR PCC BASE COURSE JOINT DETAILS. (INCLUDED IN THE COST OF 'PORTLAND CEMENT CONCRETE BASE COURSE 9")

0 20' 40'

JE-8

NOTES:

1. *.** ELEVATION STATIONED OFF OF ℄ NB I-94/90 LOCAL LANES OR ℄ LA SALLE ST.
2. (*.**) ELEVATION STATIONED OFF OF RAMP ALIGNMENT
3. SEE ALIGNMENT AND TIES SHEETS FOR CURVE INFORMATION
4. SEE ROADWAY PLAN SHEETS FOR BEGINNING AND END TAPER STATIONS AND TAPER RATES.
5. PAVEMENT ELEVATIONS ALONG EDGE OF PAVEMENTS, EDGE OF SHOULDERS, GORES, RAMPS AND IN AREAS OF SUPERELEVATION TRANSITION ARE PROVIDED AT 25' INTERVALS, FOR ALL ELEVATIONS, REFER TO THE PROFILES AND TYPICAL SECTIONS
6. SEE ROADWAY DETAIL RDT-8 FOR THE TYING OF THE MEDIAN BARRIER BASE TO THE PCC SHOULDER
7. TRANSITION FROM 4% SHOULDER SLOPE TO THE GORE SLOPE AT A DISTANCE OF 25' FROM THE START OF THE GORE.

BOWMAN, BARRETT & ASSOCIATES INC.
CONSULTING ENGINEERS
Chicago, Illinois
312.228.0100
www.bbandainc.com

REVISIONS	
NAME	DATE
REVISED	6/23/06
ADDENDUM 2	8/04/06

ILLINOIS DEPARTMENT OF TRANSPORTATION

F.A.I. 94/90 (DAN RYAN EXPRESSWAY)

GARFIELD BLVD TO 31ST STREET (NB LOCAL LANES)

PAVEMENT JOINTING AND ELEVATION PLANS

SCALE: 1"=20' DRAWN BY: JDC

DATE: 06/09/06 CHECKED BY: RS

N:\660\add\dwh\ID\SHEETS\660_JBCJE01.dgn

8/4/2006 12:55:55 PM

F.A.I.	SECTION	COUNTY	TOTAL SHEETS	SHEET NO.
94/90	•	COOK	565	216
STA.		TO STA.		
FED. ROAD DIST. NO.	ILLINOIS	FED. AID PROJECT		

62301 • (2021-922 PT2 ETC 2324.6-1P) R-10

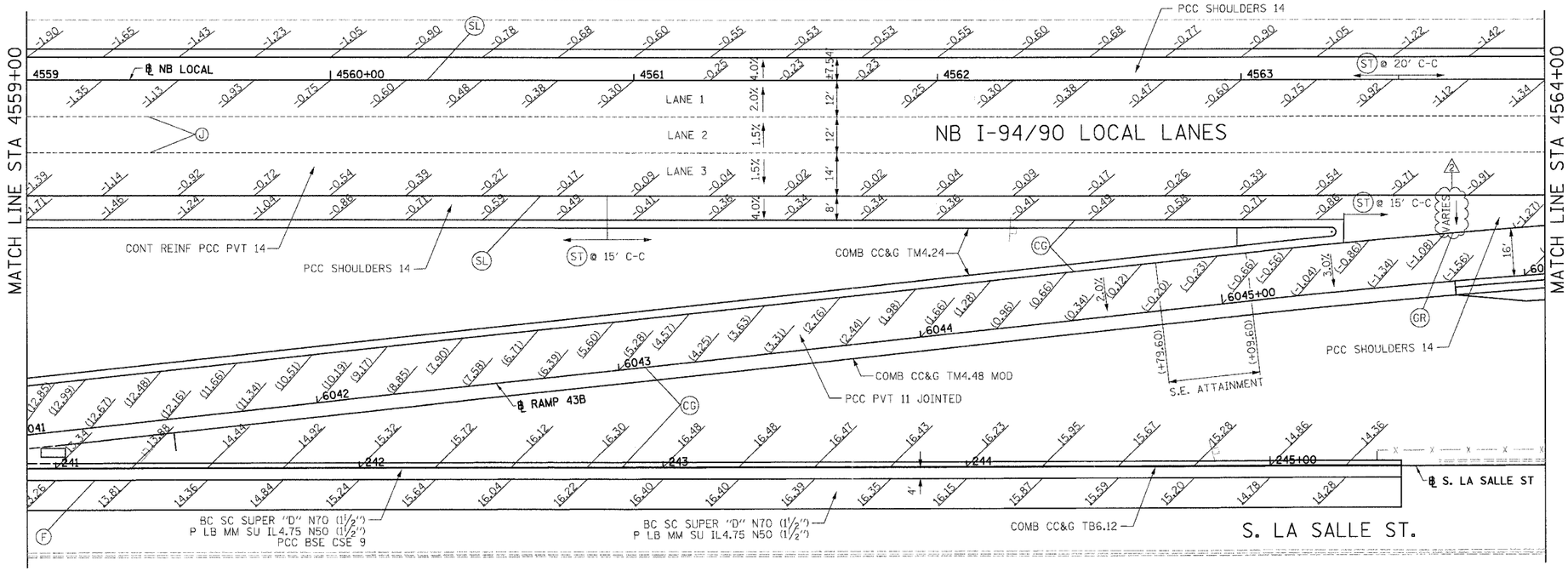

LEGEND:

- (CG) LONGITUDINAL CONSTRUCTION JOINT PER STANDARD 606001 WITH DRILLED & GROUTED 24" LONG TIE BARS
- (C) SAWED TRANSVERSE CONTRACTION JOINT PER STANDARD 420001 WITH HOT POUR SEAL
- (EX) TRANSVERSE EXPANSION JOINT PER STANDARD 420001
- (GR) NO BARS, KEYED LONGITUDINAL CONSTRUCTION JOINT WITH ALL KEYS FACING ONE DIRECTION ALONG INSIDE EDGE OF RAMP PAVEMENT AND SURROUNDING SHOULDER GORE
- (F) LONGITUDINAL CONSTRUCTION JOINT WITH DRILLED & GROUTED #8 DEFORMED EPOXY COATED TIE BARS, 24" LONG AT 24" C-C
- (J) LONGITUDINAL SAWED JOINT PER STANDARD 420001.

  LONGITUDINAL CONSTRUCTION JOINT PER STANDARD 420001 EXCEPT FOR DRILLED & GROUTED 24" LONG #8 TIE BARS. SEAL PER ASTM D 3405
- (SL) LONGITUDINAL CONSTRUCTION JOINT PER STANDARD 483001 EXCEPT FOR DRILLED & GROUTED 30" LONG #8 TIE BARS
- (ST) SAWED TRANSVERSE SHOULDER CONTRACTION JOINT PER STANDARD 483001 (MATCH RAMP PAVEMENT JOINTS IN GORE AREAS)
  - SPACED 15' C-C ALONG OUTSIDE SHOULDER
  - SPACED 20' C-C AT ALL OTHER LOCATIONS

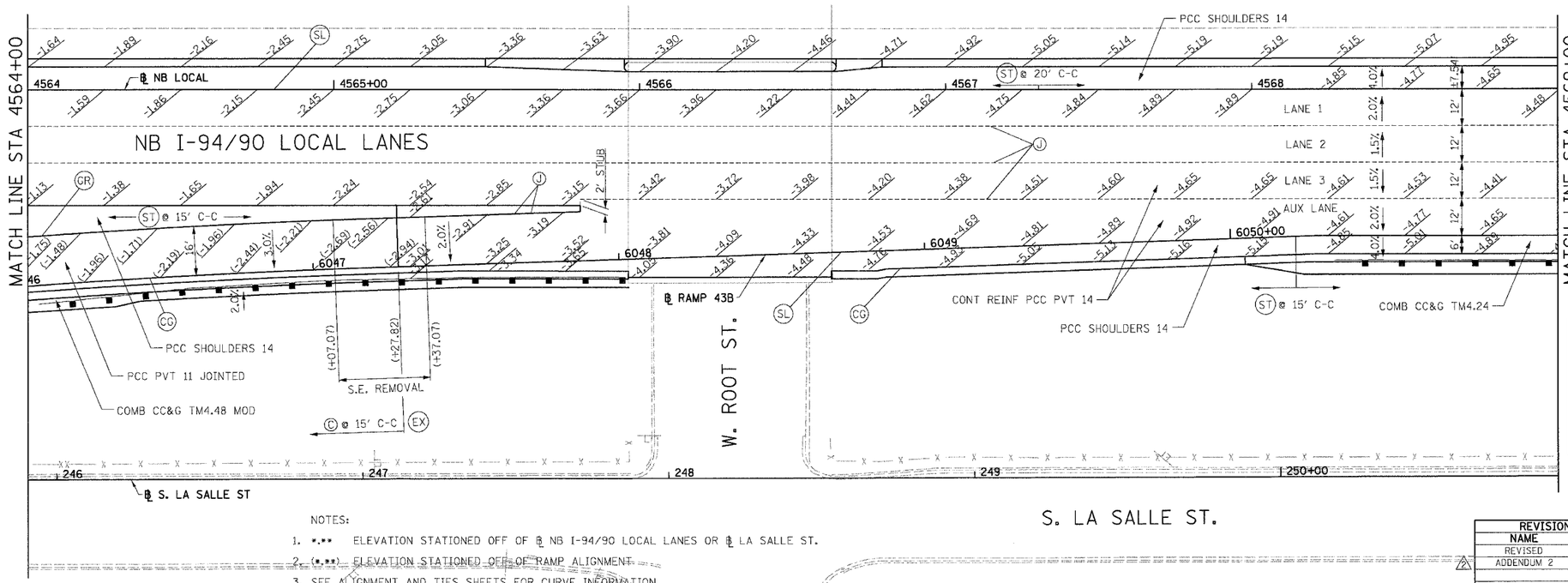

FOR PARTIAL WIDTH FRONTAGE ROAD IMPROVEMENTS, EITHER MATCH TRANSVERSE JOINT SPACING OF EXISTING PAVEMENT WITH NEWLY INSTALLED TRANSVERSE JOINTS OR PLACE NEWLY INSTALLED TRANSVERSE JOINTS AT 15'-0" INTERVALS. PLACE NEWLY INSTALLED TRANSVERSE JOINTS AT THE GREATER OF THESE TWO INTERVALS. SEE DETAIL SHEETS RDT-18A AND RDT-18B FOR PCC BASE COURSE JOINT DETAILS. (INCLUDED IN THE COST OF 'PORTLAND CEMENT CONCRETE BASE COURSE 9")

NOTES:

1. *.** ELEVATION STATIONED OFF OF ℄ NB I-94/90 LOCAL LANES OR ℄ LA SALLE ST.
2. (*.**) ELEVATION STATIONED OFF OF RAMP ALIGNMENT
3. SEE ALIGNMENT AND TIES SHEETS FOR CURVE INFORMATION
4. SEE ROADWAY PLAN SHEETS FOR BEGINNING AND END TAPER STATIONS AND TAPER RATES.
5. PAVEMENT ELEVATIONS ALONG EDGE OF PAVEMENTS, EDGE OF SHOULDERS, GORES, RAMPS AND IN AREAS OF SUPERELEVATION TRANSITION ARE PROVIDED AT 25' INTERVALS, FOR ALL ELEVATIONS, REFER TO THE PROFILES AND TYPICAL SECTIONS
6. SEE ROADWAY DETAIL RDT-8 FOR THE TYING OF THE MEDIAN BARRIER BASE TO THE PCC SHOULDER
7. TRANSITION FROM 4% SHOULDER SLOPE TO THE GORE SLOPE AT A DISTANCE OF 25' FROM THE START OF THE GORE. (2)

BOWMAN, BARRETT & ASSOCIATES INC.
CONSULTING ENGINEERS
Chicago, Illinois
312.228.0100
www.bbandainc.com

REVISIONS	
NAME	DATE
REVISED	6/23/06
ADDENDUM 2	8/04/06

0 20' 40'

JE-10

ILLINOIS DEPARTMENT OF TRANSPORTATION

F.A.I. 94/90 (DAN RYAN EXPRESSWAY)

GARFIELD BLVD TO 31ST STREET (NB LOCAL LANES)

PAVEMENT JOINTING AND ELEVATION PLANS

SCALE: 1"=20' DRAWN BY: JDC

DATE: 06/09/06 CHECKED BY: RS

8/4/2006 12:6:3 PM

N:\660\cadd\CNTR\BSHEET\S660_JBE1E1.dgn

F.A.I.	SECTION	COUNTY	TOTAL SHEETS	SHEET NO.
94/90	*	COOK	565	217
STA.		TO STA.		
FED. ROAD DIST. NO.	ILLINOIS	FED. AID PROJECT		

62301 • (2021-922 PT2 ETC 2324.6-1P) R-10

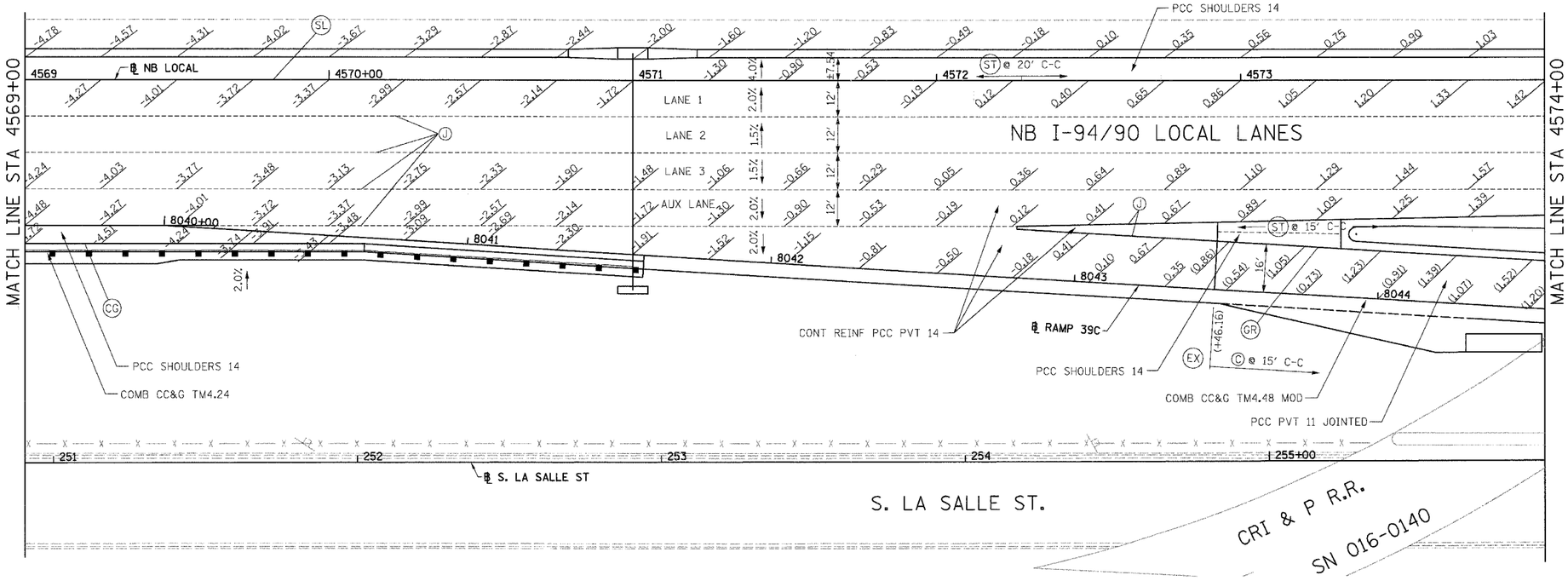

LEGEND:

- (CG) LONGITUDINAL CONSTRUCTION JOINT PER STANDARD 606001 WITH DRILLED & GROUTED 24" LONG TIE BARS
- (C) SAWED TRANSVERSE CONTRACTION JOINT PER STANDARD 420001 WITH HOT POUR SEAL
- (EX) TRANSVERSE EXPANSION JOINT PER STANDARD 420001
- (GR) NO BARS, KEYED LONGITUDINAL CONSTRUCTION JOINT WITH ALL KEYS FACING ONE DIRECTION ALONG INSIDE EDGE OF RAMP PAVEMENT AND SURROUNDING SHOULDER GORE
- (F) LONGITUDINAL CONSTRUCTION JOINT WITH DRILLED & GROUTED #8 DEFORMED EPOXY COATED TIE BARS, 24" LONG AT 24" C-C
- (J) LONGITUDINAL SAWED JOINT PER STANDARD 420001.

  LONGITUDINAL CONSTRUCTION JOINT PER STANDARD 420001 EXCEPT FOR DRILLED & GROUTED 24" LONG #8 TIE BARS. SEAL PER ASTM D 3405
- (SL) LONGITUDINAL CONSTRUCTION JOINT PER STANDARD 483001 EXCEPT FOR DRILLED & GROUTED 30" LONG #8 TIE BARS
- (ST) SAWED TRANSVERSE SHOULDER CONTRACTION JOINT PER STANDARD 483001 (MATCH RAMP PAVEMENT JOINTS IN GORE AREAS)
  - SPACED 15' C-C ALONG OUTSIDE SHOULDER
  - SPACED 20' C-C AT ALL OTHER LOCATIONS

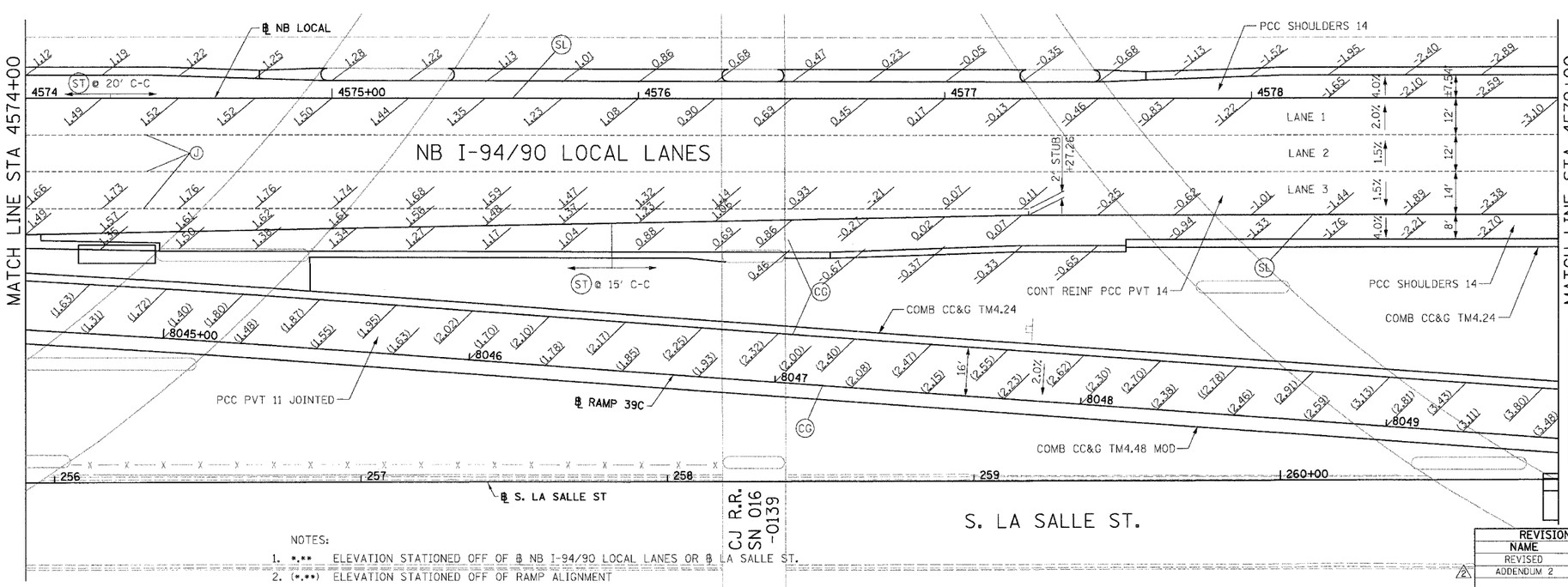

SWALE ELEVATIONS		
STA	OFFSET	ELEVATION
4572+92	49.8 RT	0.75
4573+00	50.0 RT	0.80
+25	50.5 RT	0.97
+33	45.9 RT	1.02

FOR PARTIAL WIDTH FRONTAGE ROAD IMPROVEMENTS, EITHER MATCH TRANSVERSE JOINT SPACING OF EXISTING PAVEMENT WITH NEWLY INSTALLED TRANSVERSE JOINTS OR PLACE NEWLY INSTALLED TRANSVERSE JOINTS AT 15'-0" INTERVALS. PLACE NEWLY INSTALLED TRANSVERSE JOINTS AT THE GREATER OF THESE TWO INTERVALS. SEE DETAIL SHEETS RDT-18A AND RDT-18B FOR PCC BASE COURSE JOINT DETAILS. (INCLUDED IN THE COST OF 'PORTLAND CEMENT CONCRETE BASE COURSE 9")

0 20' 40'

JE-11

NOTES:

1. *.** ELEVATION STATIONED OFF OF ℄ NB I-94/90 LOCAL LANES OR ℄ LA SALLE ST.
2. (*.**) ELEVATION STATIONED OFF OF RAMP ALIGNMENT
3. SEE ALIGNMENT AND TIES SHEETS FOR CURVE INFORMATION
4. SEE ROADWAY PLAN SHEETS FOR BEGINNING AND END TAPER STATIONS AND TAPER RATES.
5. PAVEMENT ELEVATIONS ALONG EDGE OF PAVEMENTS, EDGE OF SHOULDERS, GORES, RAMPS AND IN AREAS OF SUPERELEVATION TRANSITION ARE PROVIDED AT 25' INTERVALS, FOR ALL ELEVATIONS, REFER TO THE PROFILES AND TYPICAL SECTIONS.
6. SEE ROADWAY DETAIL RDT-8 FOR THE TYING OF THE MEDIAN BARRIER BASE TO THE PCC SHOULDER.

BOWMAN, BARRETT & ASSOCIATES INC.
CONSULTING ENGINEERS
Chicago, Illinois
312.228.0100
www.bbandainc.com

REVISIONS	
NAME	DATE
REVISED	6/23/06
ADDENDUM 2	8/04/06

ILLINOIS DEPARTMENT OF TRANSPORTATION

F.A.I. 94/90 (DAN RYAN EXPRESSWAY)

GARFIELD BLVD TO 31ST STREET (NB LOCAL LANES)

PAVEMENT JOINTING AND ELEVATION PLANS

SCALE: 1"=20' DRAWN BY: JDC

DATE: 06/09/06 CHECKED BY: RS

12:56:32 PM 8/4/2006

F.A.I.	SECTION	COUNTY	TOTAL SHEETS	SHEET NO.
94/90	*	COOK	565	218
STA.		TO STA.		
FED. ROAD DIST. NO.	ILLINOIS	FED. AID PROJECT		

62301 * (2021-922 PT2 ETC 2324.6-1P) R-10

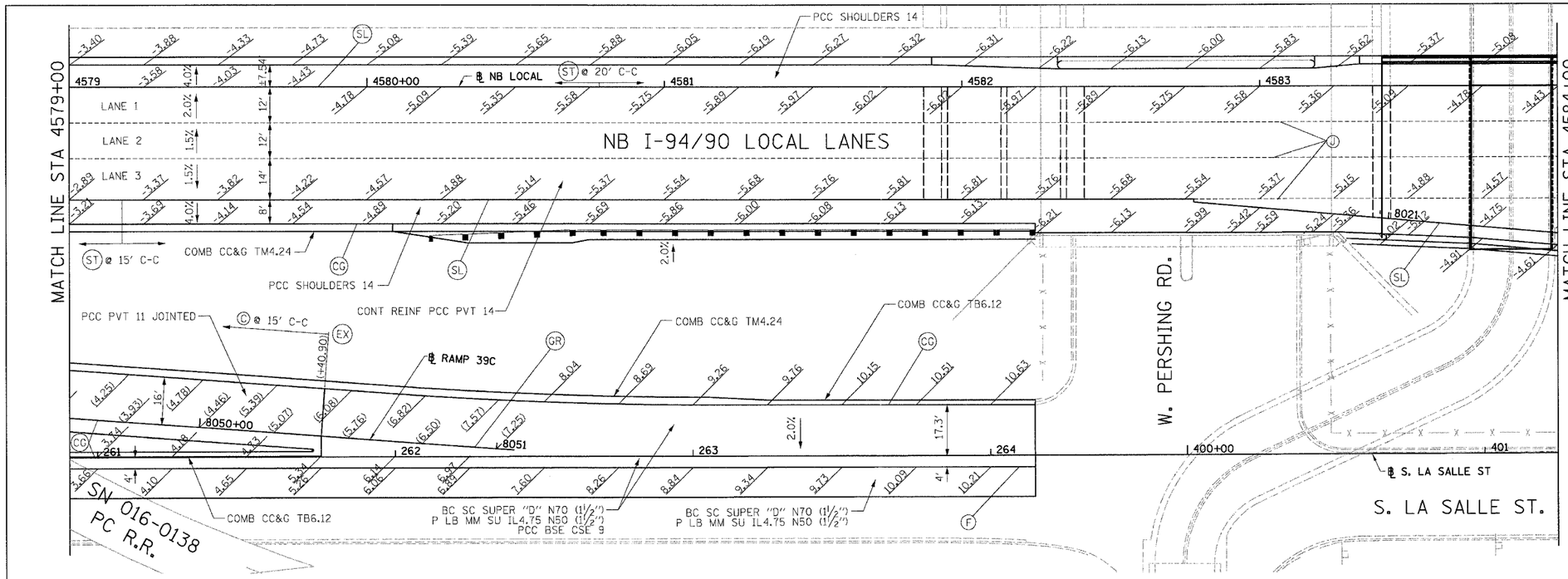

LEGEND:

- (CG) LONGITUDINAL CONSTRUCTION JOINT PER STANDARD 606001 WITH DRILLED & GROUTED 24" LONG TIE BARS
- (C) SAWED TRANSVERSE CONTRACTION JOINT PER STANDARD 420001 WITH HOT POUR SEAL
- (EX) TRANSVERSE EXPANSION JOINT PER STANDARD 420001
- (GR) NO BARS, KEYED LONGITUDINAL CONSTRUCTION JOINT WITH ALL KEYS FACING ONE DIRECTION ALONG INSIDE EDGE OF RAMP PAVEMENT AND SURROUNDING SHOULDER GORE
- (F) LONGITUDINAL CONSTRUCTION JOINT WITH DRILLED & GROUTED #8 DEFORMED EPOXY COATED TIE BARS, 24" LONG AT 24" C-C
- (J) LONGITUDINAL SAWED JOINT PER STANDARD 420001.

  LONGITUDINAL CONSTRUCTION JOINT PER STANDARD 420001 EXCEPT FOR DRILLED & GROUTED 24" LONG #8 TIE BARS. SEAL PER ASTM D 3405
- (SL) LONGITUDINAL CONSTRUCTION JOINT PER STANDARD 483001 EXCEPT FOR DRILLED & GROUTED 30" LONG #8 TIE BARS
- (ST) SAWED TRANSVERSE SHOULDER CONTRACTION JOINT PER STANDARD 483001 (MATCH RAMP PAVEMENT JOINTS IN GORE AREAS)
  - SPACED 15' C-C ALONG OUTSIDE SHOULDER
  - SPACED 20' C-C AT ALL OTHER LOCATIONS

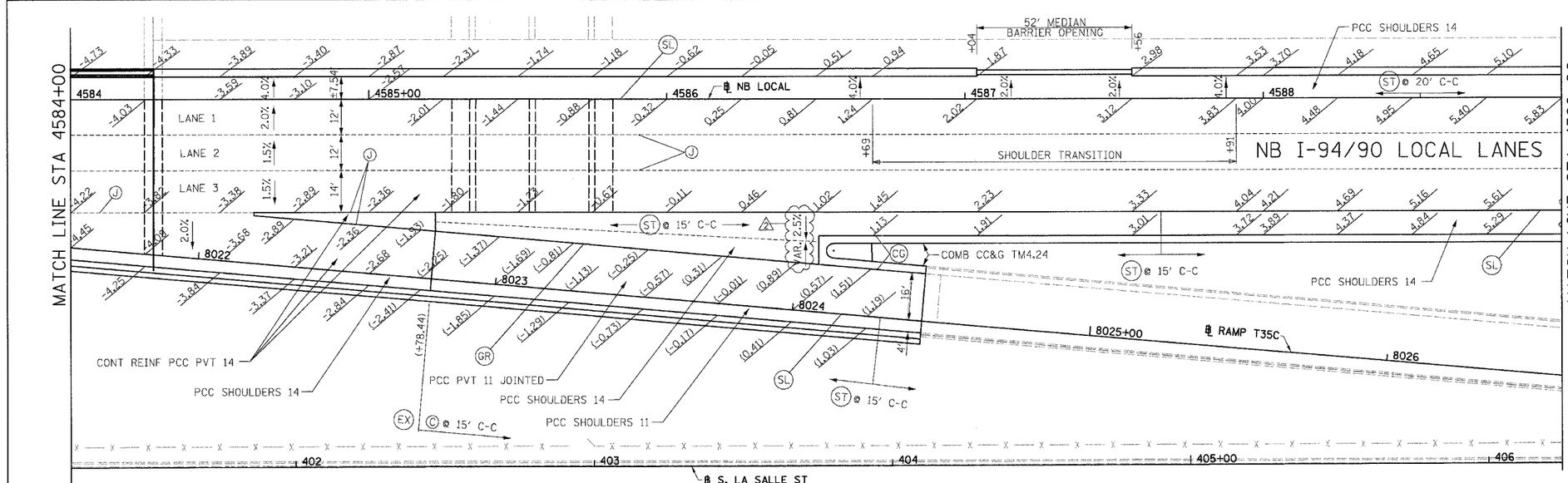

SWALE ELEVATIONS		
STA	OFFSET	ELEVATION
4585+22	41.2 RT	-1.94
+50	42.6 RT	-1.34
+75	43.9 RT	-0.82
4586+00	45.1 RT	-0.29
+25	46.4 RT	0.25
+51	47.7 RT	0.80

FOR PARTIAL WIDTH FRONTAGE ROAD IMPROVEMENTS, EITHER MATCH TRANSVERSE JOINT SPACING OF EXISTING PAVEMENT WITH NEWLY INSTALLED TRANSVERSE JOINTS OR PLACE NEWLY INSTALLED TRANSVERSE JOINTS AT 15'-0" INTERVALS. PLACE NEWLY INSTALLED TRANSVERSE JOINTS AT THE GREATER OF THESE TWO INTERVALS. SEE DETAIL SHEETS RDT-18A AND RDT-18B FOR PCC BASE COURSE JOINT DETAILS. (INCLUDED IN THE COST OF 'PORTLAND CEMENT CONCRETE BASE COURSE 9")

0 20' 40'

JE-12

NOTES:

1. *.** ELEVATION STATIONED OFF OF ℄ NB I-94/90 LOCAL LANES OR ℄ LA SALLE ST.
2. (*.**) ELEVATION STATIONED OFF OF RAMP ALIGNMENT
3. SEE ALIGNMENT AND TIES SHEETS FOR CURVE INFORMATION
4. SEE ROADWAY PLAN SHEETS FOR BEGINNING AND END TAPER STATIONS AND TAPER RATES.
5. PAVEMENT ELEVATIONS ALONG EDGE OF PAVEMENTS, EDGE OF SHOULDERS, GORES, RAMPS AND IN AREAS OF SUPERELEVATION TRANSITION ARE PROVIDED AT 25' INTERVALS, FOR ALL ELEVATIONS, REFER TO THE PROFILES AND TYPICAL SECTIONS
6. SEE ROADWAY DETAIL RDT-8 FOR THE TYING OF THE MEDIAN BARRIER BASE TO THE PCC SHOULDER
7. TRANSITION FROM 4% SHOULDER SLOPE TO THE GORE SLOPE AT A DISTANCE OF 25' FROM THE START OF THE GORE.

BOWMAN, BARRETT & ASSOCIATES INC.
CONSULTING ENGINEERS
Chicago, Illinois
312.228.0100
www.bbandainc.com

REVISIONS	
NAME	DATE
REVISED	6/23/06
ADDENDUM 2	8/04/06

ILLINOIS DEPARTMENT OF TRANSPORTATION

F.A.I. 94/90 (DAN RYAN EXPRESSWAY)

GARFIELD BLVD TO 31ST STREET (NB LOCAL LANES)

PAVEMENT JOINTING AND ELEVATION PLANS

SCALE: 1"=20' DRAWN BY: JDC

DATE: 06/09/06 CHECKED BY: RS

12:26:48 PM 8/4/2006

F.A.I.	SECTION	COUNTY	TOTAL SHEETS	SHEET NO.
94/90	*	COOK	565	220
STA.		TO STA.		
FED. ROAD DIST. NO.	ILLINOIS	FED. AID PROJECT		

62301 * (2021-922 PT2 ETC 2324.6-1P) R-10

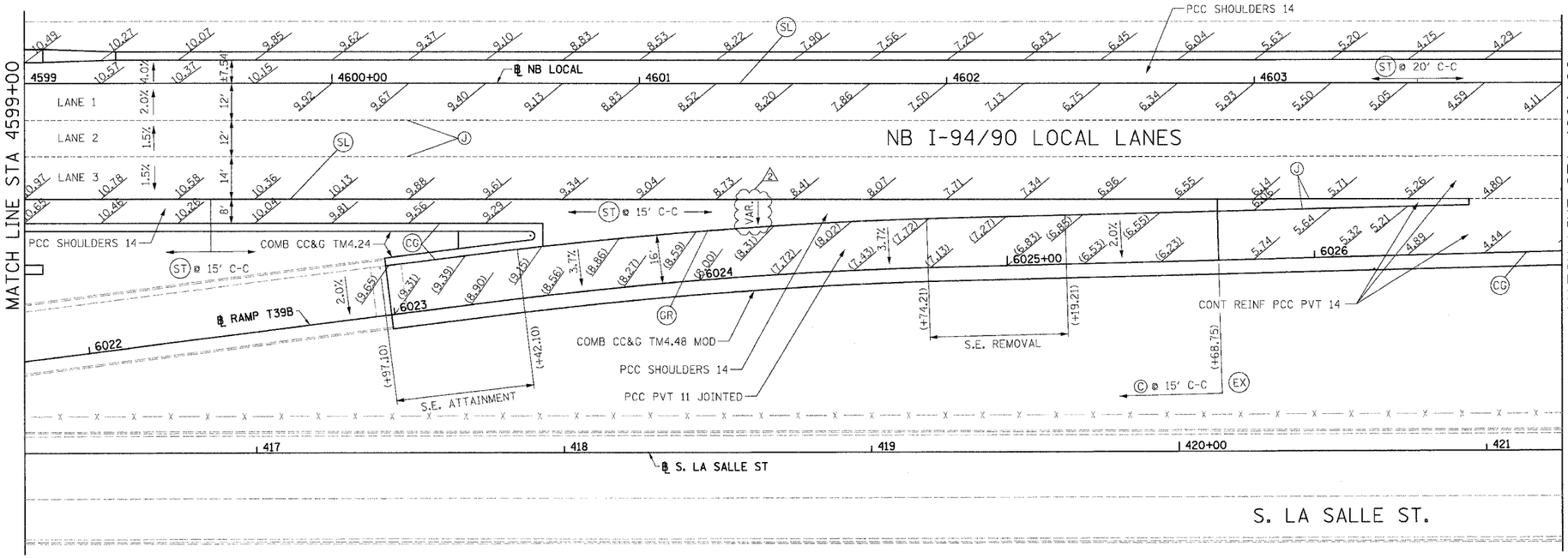

LEGEND:

- (CG) LONGITUDINAL CONSTRUCTION JOINT PER STANDARD 606001 WITH DRILLED & GROUTED 24" LONG TIE BARS
- (C) SAWED TRANSVERSE CONTRACTION JOINT PER STANDARD 420001 WITH HOT POUR SEAL
- (EX) TRANSVERSE EXPANSION JOINT PER STANDARD 420001
- (GR) NO BARS, KEYED LONGITUDINAL CONSTRUCTION JOINT WITH ALL KEYS FACING ONE DIRECTION ALONG INSIDE EDGE OF RAMP PAVEMENT AND SURROUNDING SHOULDER GORE
- (F) LONGITUDINAL CONSTRUCTION JOINT WITH DRILLED & GROUTED #8 DEFORMED EPOXY COATED TIE BARS, 24" LONG AT 24" C-C
- (J) LONGITUDINAL SAWED JOINT PER STANDARD 420001.

  LONGITUDINAL CONSTRUCTION JOINT PER STANDARD 420001 EXCEPT FOR DRILLED & GROUTED 24" LONG #8 TIE BARS. SEAL PER ASTM D 3405
- (SL) LONGITUDINAL CONSTRUCTION JOINT PER STANDARD 483001 EXCEPT FOR DRILLED & GROUTED 30" LONG #8 TIE BARS
- (ST) SAWED TRANSVERSE SHOULDER CONTRACTION JOINT PER STANDARD 483001 (MATCH RAMP PAVEMENT JOINTS IN GORE AREAS)
  - SPACED 15' C-C ALONG OUTSIDE SHOULDER
  - SPACED 20' C-C AT ALL OTHER LOCATIONS

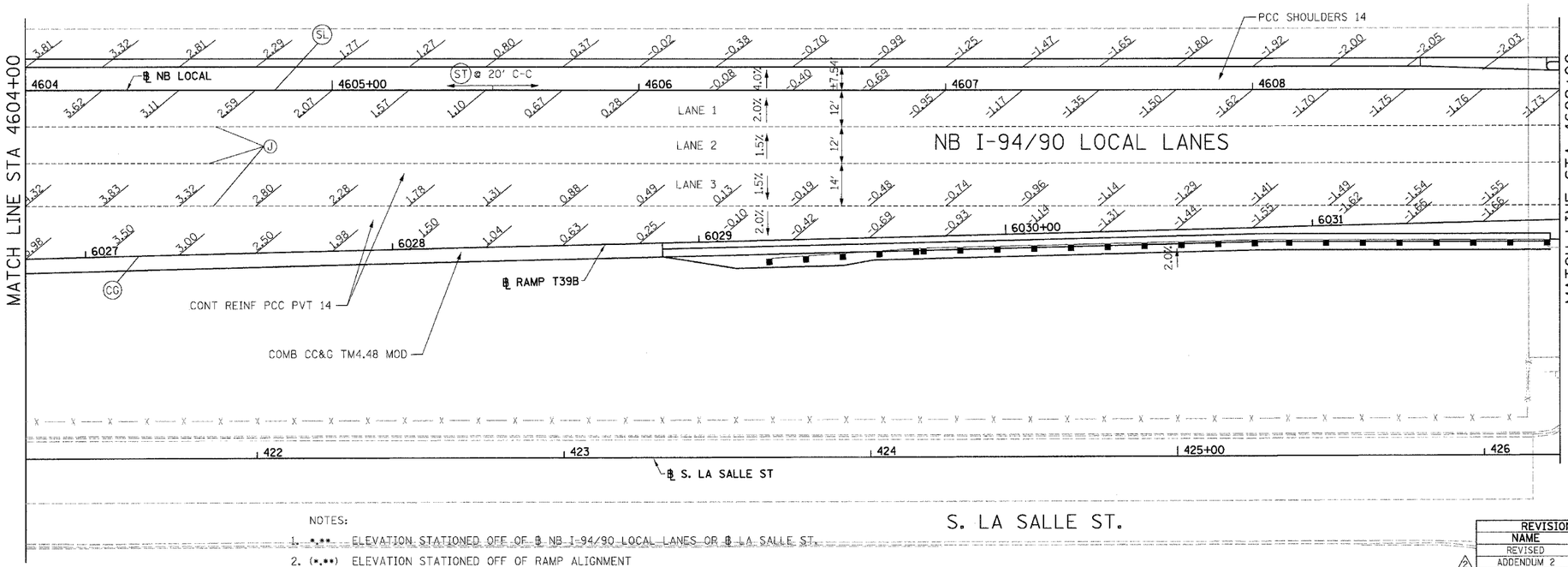

FOR PARTIAL WIDTH FRONTAGE ROAD IMPROVEMENTS, EITHER MATCH TRANSVERSE JOINT SPACING OF EXISTING PAVEMENT WITH NEWLY INSTALLED TRANSVERSE JOINTS OR PLACE NEWLY INSTALLED TRANSVERSE JOINTS AT 15'-0" INTERVALS. PLACE NEWLY INSTALLED TRANSVERSE JOINTS AT THE GREATER OF THESE TWO INTERVALS. SEE DETAIL SHEETS RDT-18A AND RDT-18B FOR PCC BASE COURSE JOINT DETAILS. (INCLUDED IN THE COST OF 'PORTLAND CEMENT CONCRETE BASE COURSE 9")

0 20' 40'

JE-14

NOTES:

1. *.** ELEVATION STATIONED OFF OF ℄ NB I-94/90 LOCAL LANES OR ℄ LA SALLE ST.
2. (*.**) ELEVATION STATIONED OFF OF RAMP ALIGNMENT
3. SEE ALIGNMENT AND TIES SHEETS FOR CURVE INFORMATION
4. SEE ROADWAY PLAN SHEETS FOR BEGINNING AND END TAPER STATIONS AND TAPER RATES.
5. PAVEMENT ELEVATIONS ALONG EDGE OF PAVEMENTS, EDGE OF SHOULDERS, GORES, RAMPS AND IN AREAS OF SUPERELEVATION TRANSITION ARE PROVIDED AT 25' INTERVALS, FOR ALL ELEVATIONS, REFER TO THE PROFILES AND TYPICAL SECTIONS
6. SEE ROADWAY DETAIL RDT-8 FOR THE TYING OF THE MEDIAN BARRIER BASE TO THE PCC SHOULDER
7. TRANSITION FROM 4% SHOULDER SLOPE TO THE GORE SLOPE AT A DISTANCE OF 25' FROM THE START OF THE GORE. 2

BOWMAN, BARRETT & ASSOCIATES INC.
CONSULTING ENGINEERS
Chicago, Illinois
312.228.0100
www.bbandainc.com

REVISIONS	
NAME	DATE
REVISED	6/23/06
ADDENDUM 2	8/04/06

ILLINOIS DEPARTMENT OF TRANSPORTATION

F.A.I. 94/90 (DAN RYAN EXPRESSWAY)

GARFIELD BLVD TO 31ST STREET (NB LOCAL LANES)

PAVEMENT JOINTING AND ELEVATION PLANS

SCALE: 1"=20' DRAWN BY: JDC

DATE: 06/09/06 CHECKED BY: RS

N:\660\contrdcs\IVR\SHEETS\660_JE_IC01.dgn 12:11:11 PM 8/4/2006

F.A.I.	SECTION	COUNTY	TOTAL SHEETS	SHEET NO.
94/90	*	COOK	565	221
STA.		TO STA.		
FED. ROAD DIST. NO.	ILLINOIS	FED. AID PROJECT		

62301 * (2021-922 PT2 ETC 2324.6-1P) R-10

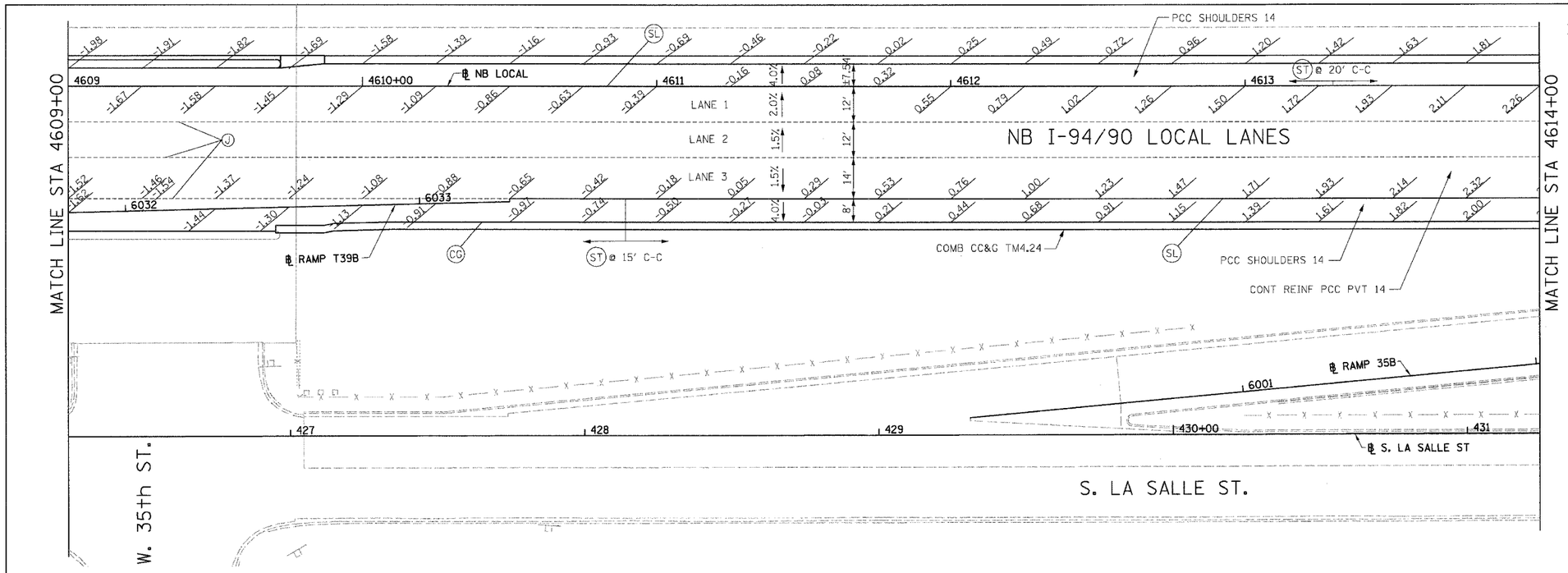

LEGEND:

- (CG) LONGITUDINAL CONSTRUCTION JOINT PER STANDARD 606001 WITH DRILLED & GROUTED 24" LONG TIE BARS
- (C) SAWED TRANSVERSE CONTRACTION JOINT PER STANDARD 420001 WITH HOT POUR SEAL
- (EX) TRANSVERSE EXPANSION JOINT PER STANDARD 420001
- (GR) NO BARS, KEYED LONGITUDINAL CONSTRUCTION JOINT WITH ALL KEYS FACING ONE DIRECTION ALONG INSIDE EDGE OF RAMP PAVEMENT AND SURROUNDING SHOULDER GORE
- (F) LONGITUDINAL CONSTRUCTION JOINT WITH DRILLED & GROUTED #8 DEFORMED EPOXY COATED TIE BARS, 24" LONG AT 24" C-C
- (J) LONGITUDINAL SAWED JOINT PER STANDARD 420001.

  LONGITUDINAL CONSTRUCTION JOINT PER STANDARD 420001 EXCEPT FOR DRILLED & GROUTED 24" LONG #8 TIE BARS. SEAL PER ASTM D 3405
- (SL) LONGITUDINAL CONSTRUCTION JOINT PER STANDARD 483001 EXCEPT FOR DRILLED & GROUTED 30" LONG #8 TIE BARS
- (ST) SAWED TRANSVERSE SHOULDER CONTRACTION JOINT PER STANDARD 483001 (MATCH RAMP PAVEMENT JOINTS IN GORE AREAS)
  - SPACED 15' C-C ALONG OUTSIDE SHOULDER
  - SPACED 20' C-C AT ALL OTHER LOCATIONS

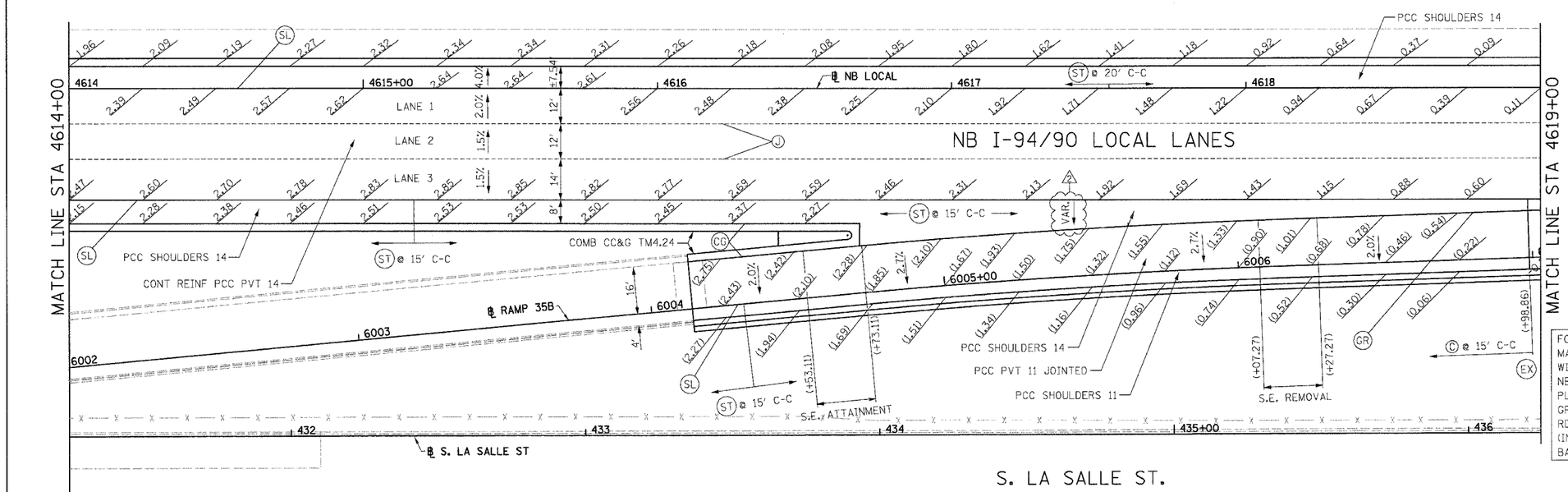

FOR PARTIAL WIDTH FRONTAGE ROAD IMPROVEMENTS, EITHER MATCH TRANSVERSE JOINT SPACING OF EXISTING PAVEMENT WITH NEWLY INSTALLED TRANSVERSE JOINTS OR PLACE NEWLY INSTALLED TRANSVERSE JOINTS AT 15'-0" INTERVALS. PLACE NEWLY INSTALLED TRANSVERSE JOINTS AT THE GREATER OF THESE TWO INTERVALS. SEE DETAIL SHEETS RDT-18A AND RDT-18B FOR PCC BASE COURSE JOINT DETAILS. (INCLUDED IN THE COST OF 'PORTLAND CEMENT CONCRETE BASE COURSE 9")

0 20' 40'

JE-15

NOTES:

1. (*.**) ELEVATION STATIONED OFF OF ℄ NB I-94/90 LOCAL LANES OR ℄ LA SALLE ST.
2. (*.**) ELEVATION STATIONED OFF OF RAMP ALIGNMENT
3. SEE ALIGNMENT AND TIES SHEETS FOR CURVE INFORMATION
4. SEE ROADWAY PLAN SHEETS FOR BEGINNING AND END TAPER STATIONS AND TAPER RATES.
5. PAVEMENT ELEVATIONS ALONG EDGE OF PAVEMENTS, EDGE OF SHOULDERS, GORES, RAMPS AND IN AREAS OF SUPERELEVATION TRANSITION ARE PROVIDED AT 25' INTERVALS, FOR ALL ELEVATIONS, REFER TO THE PROFILES AND TYPICAL SECTIONS
6. SEE ROADWAY DETAIL RDT-8 FOR THE TYING OF THE MEDIAN BARRIER BASE TO THE PCC SHOULDER
7. TRANSITION FROM 4% SHOULDER SLOPE TO THE GORE SLOPE AT A DISTANCE OF 25' FROM THE START OF THE GORE. (2)

BOWMAN, BARRETT & ASSOCIATES INC.
CONSULTING ENGINEERS
Chicago, Illinois
312.228.0100
www.bbandainc.com

REVISIONS	
NAME	DATE
REVISED	6/23/06
ADDENDUM 2	8/04/06

ILLINOIS DEPARTMENT OF TRANSPORTATION

F.A.I. 94/90 (DAN RYAN EXPRESSWAY)

GARFIELD BLVD TO 31ST STREET (NB LOCAL LANES)

PAVEMENT JOINTING AND ELEVATION PLANS

SCALE: 1"=20' DRAWN BY: JDC

DATE: 06/09/06 CHECKED BY: RS

N:\660\cadd\dgn\NB\SHEETS\660_JE_JE01.dgn 8/4/2006 12:47:38 PM

F.A.I.	SECTION	COUNTY	TOTAL SHEETS	SHEET NO.
94/90	*	COOK	565	222
STA.		TO STA.		
FED. ROAD DIST. NO.	ILLINOIS	FED. AID PROJECT		

62301 * (2021-922 PT2 ETC 2324.6-1P) R-10

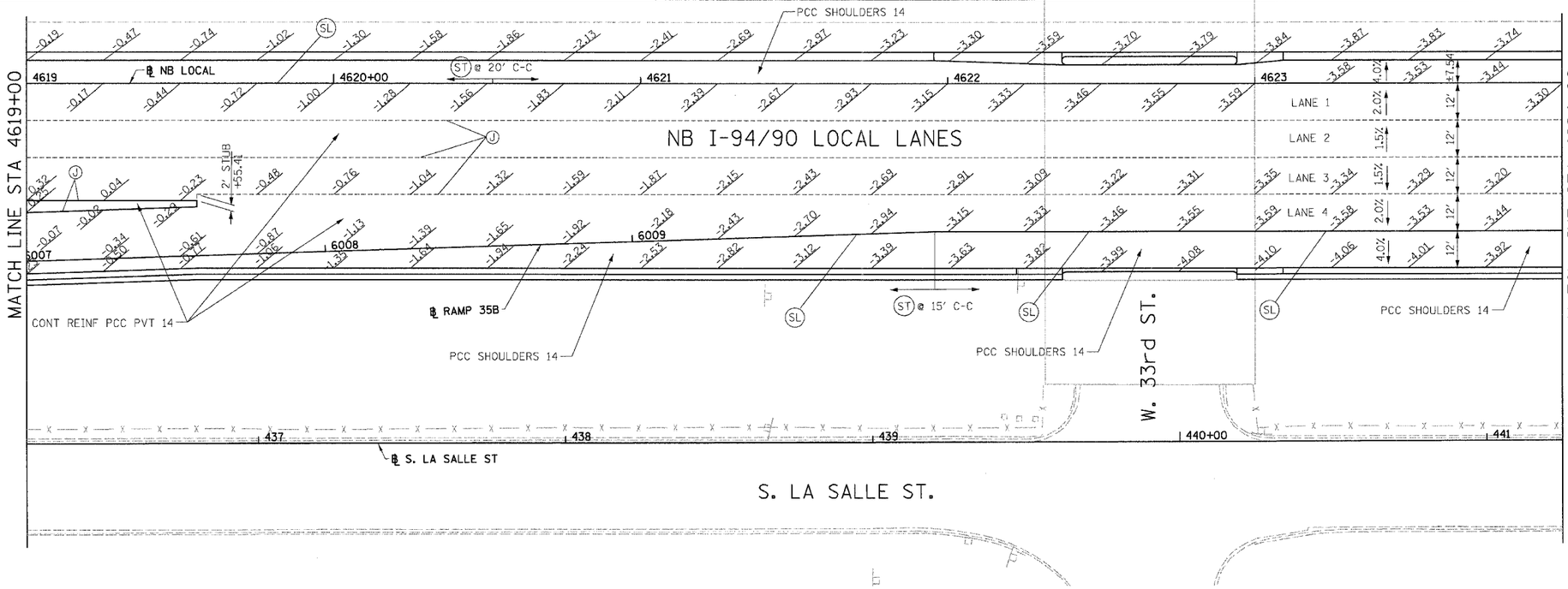

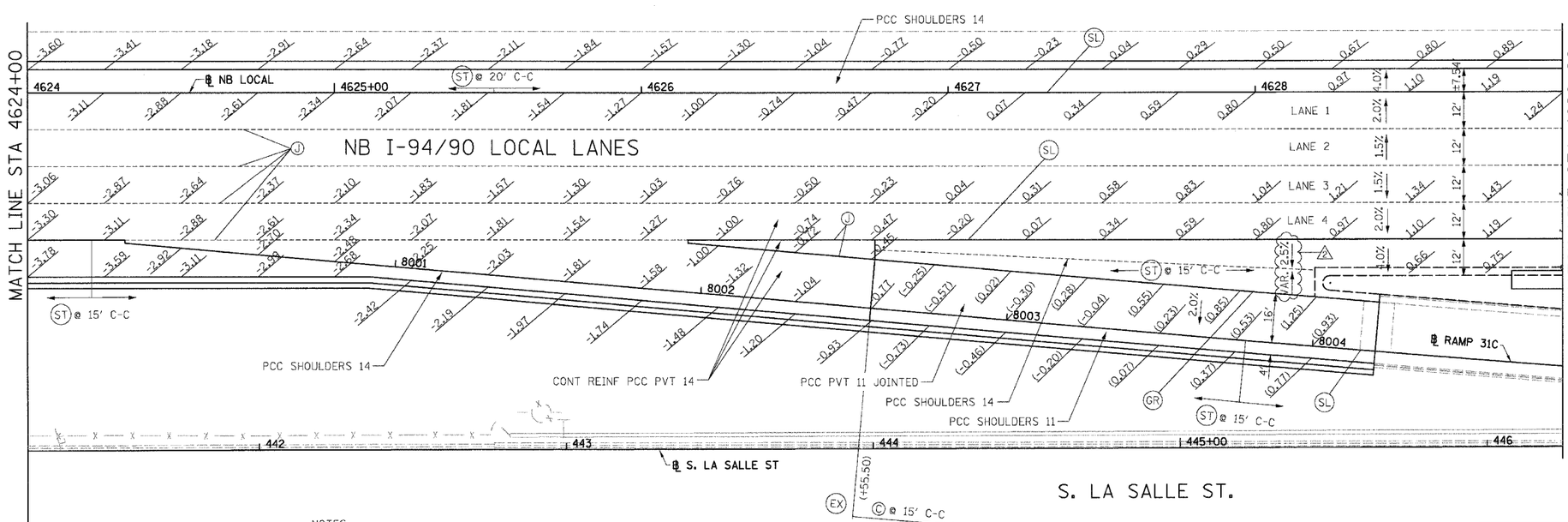

LEGEND:

- CG — LONGITUDINAL CONSTRUCTION JOINT PER STANDARD 606001 WITH DRILLED & GROUTED 24" LONG TIE BARS
- C — SAWED TRANSVERSE CONTRACTION JOINT PER STANDARD 420001 WITH HOT POUR SEAL
- EX — TRANSVERSE EXPANSION JOINT PER STANDARD 420001
- GR — NO BARS, KEYED LONGITUDINAL CONSTRUCTION JOINT WITH ALL KEYS FACING ONE DIRECTION ALONG INSIDE EDGE OF RAMP PAVEMENT AND SURROUNDING SHOULDER GORE
- F — LONGITUDINAL CONSTRUCTION JOINT WITH DRILLED & GROUTED #8 DEFORMED EPOXY COATED TIE BARS, 24" LONG AT 24" C-C
- J — LONGITUDINAL SAWED JOINT PER STANDARD 420001.

  LONGITUDINAL CONSTRUCTION JOINT PER STANDARD 420001 EXCEPT FOR DRILLED & GROUTED 24" LONG #8 TIE BARS. SEAL PER ASTM D 3405
- SL — LONGITUDINAL CONSTRUCTION JOINT PER STANDARD 483001 EXCEPT FOR DRILLED & GROUTED 30" LONG #8 TIE BARS
- ST — SAWED TRANSVERSE SHOULDER CONTRACTION JOINT PER STANDARD 483001 (MATCH RAMP PAVEMENT JOINTS IN GORE AREAS)
  - SPACED 15' C-C ALONG OUTSIDE SHOULDER
  - SPACED 20' C-C AT ALL OTHER LOCATIONS

SWALE ELEVATIONS		
STA	OFFSET	ELEVATION
4626+76	51.2 RT	-0.55
4627+00	52.3 RT	-0.31
+25	53.5 RT	-0.07
+50	54.7 RT	0.17
+75	55.9 RT	0.39
4628+00	57.1 RT	0.57
+19	58.0 RT	0.69

2

FOR PARTIAL WIDTH FRONTAGE ROAD IMPROVEMENTS, EITHER MATCH TRANSVERSE JOINT SPACING OF EXISTING PAVEMENT WITH NEWLY INSTALLED TRANSVERSE JOINTS OR PLACE NEWLY INSTALLED TRANSVERSE JOINTS AT 15'-0" INTERVALS. PLACE NEWLY INSTALLED TRANSVERSE JOINTS AT THE GREATER OF THESE TWO INTERVALS. SEE DETAIL SHEETS RDT-18A AND RDT-18B FOR PCC BASE COURSE JOINT DETAILS. (INCLUDED IN THE COST OF 'PORTLAND CEMENT CONCRETE BASE COURSE 9")

0 20' 40'

JE-16

NOTES:

1. *.** ELEVATION STATIONED OFF OF ℄ NB I-94/90 LOCAL LANES OR ℄ LA SALLE ST.
2. (*.**) ELEVATION STATIONED OFF OF RAMP ALIGNMENT
3. SEE ALIGNMENT AND TIES SHEETS FOR CURVE INFORMATION
4. SEE ROADWAY PLAN SHEETS FOR BEGINNING AND END TAPER STATIONS AND TAPER RATES.
5. PAVEMENT ELEVATIONS ALONG EDGE OF PAVEMENTS, EDGE OF SHOULDERS, GORES, RAMPS AND IN AREAS OF SUPERELEVATION TRANSITION ARE PROVIDED AT 25' INTERVALS, FOR ALL ELEVATIONS, REFER TO THE PROFILES AND TYPICAL SECTIONS
6. SEE ROADWAY DETAIL RDT-8 FOR THE TYING OF THE MEDIAN BARRIER BASE TO THE PCC SHOULDER
7. TRANSITION FROM 4% SHOULDER SLOPE TO THE GORE SLOPE AT A DISTANCE OF 25' FROM THE START OF THE GORE. 2

BOWMAN, BARRETT & ASSOCIATES INC.
CONSULTING ENGINEERS
Chicago, Illinois
312.228.0100
www.bbandainc.com

REVISIONS	
NAME	DATE
REVISED	6/23/06
2 ADDENDUM 2	8/04/06

ILLINOIS DEPARTMENT OF TRANSPORTATION

F.A.I. 94/90 (DAN RYAN EXPRESSWAY)

GARFIELD BLVD TO 31ST STREET (NB LOCAL LANES)

PAVEMENT JOINTING AND ELEVATION PLANS

SCALE: 1"=20' DRAWN BY: JDC

DATE: 06/09/06 CHECKED BY: RS

8/4/2006 12:47:55 PM

N:\6650\dgn\MB\SHEETS\6650_JE16.dgn

F.A.I. RTE.	SECTION	COUNTY	TOTAL SHEETS	SHEET NO.
90/94	*	COOK	565	232
STA.		TO STA.		
FED. ROAD DIST. NO. 1	ILLINOIS	FED. AID PROJECT		

62301 * (2021-922 PT2 ETC 2324.6-1P) R-10

PROPOSED SIGNING SCHEDULE

SHEET NUMBER	STRUCTURE NUMBER	STATION	SIGN CALLOUT	SIGN PANEL-TYPE 1	SIGN PANEL-TYPE 2	SIGN PANEL-TYPE 3	REMOVE SIGN PANEL ASSEMBLY-TYPE B	REMOVE SIGN PANEL-TYPE 3	STRUCTURAL STEEL SIGN SUPPORT - BREAKAWAY	TELESCOPING STEEL SIGN SUPPORT	METAL POST - TYPE B	WOOD SIGN SUPPORT	BASE FOR TELESCOPING STEEL SIGN SUPPORT	OVERHEAD SIGN STRUCTURE - SPAN, TYPE I-A (4'-0" X 4'-6")	OVERHEAD SIGN STRUCTURE - SPAN, TYPE II-A (4'-6" X 5'-3")	OVERHEAD SIGN STRUCTURE - SPAN,TYPE III-A (5'-0" X 7'-0")	OVERHEAD SIGN STRUCTURE - BRIDGE MOUNTED	OVERHEAD SIGN STRUCTURE WALKWAY	CONCRETE FOUNDATIONS	DRILLED SHAFT CONCRETE FOUNDATIONS	REMOVE OVERHEAD SIGN STRUCTURE - SPAN	REMOVE OVERHEAD SIGN STRUCTURE - BRIDGE MOUNTED	REMOVE GROUND-MOUNTED SIGN SUPPORT	REMOVE CONCRETE FOUNDATION - GROUND MOUNT	REMOVE CONCRETE FOUNDATION - OVERHEAD	REMOVE AND RE-ERECT EXISTING SIGN
				SQ FT	SQ FT	SQ FT	EACH	SQ FT	POUND	FOOT	FOOT	FOOT	EACH	FOOT	FOOT	FOOT	FOOT	FOOT	CU YD	CU YD	EACH	EACH	EACH	EACH	EACH	EACH
SG-02	-	4490+18	ES02-01																		1				2	
SG-02	-	4486+25	GS02-01				1																			
SG-02	-	4505+11	GS02-02					85															2	2		
SG-02	-	4485+50	PS02-01		16					12			1													
SG-02	-	4488+00	PS02-02	4						8			1													
SG-02	-	4496+50	PS02-03	20						10.5			1													
SG-02	-	4497+00	PS02-04		12							15														
SG-02	1S016I094L057.3	4498+00	PS02-05			168								65				41		15.5						
SG-03		47TH ST.	ES03-01					91.25																		
SG-03	-	4517+07	GS03-01				1																			
SG-03	-	4515+00	GS03-02					70															2	2		
SG-03	-	4518+01	GS03-04				1																			
SG-03	-	4519+00	GS03-05					70															2	2		
SG-03	-	4528+00	GS03-06					51															2	2		
SG-03	1S016I094L057.1	4506+75	PS03-01			310								68				48.5		15.7						
SG-03	-	4514+10	PS03-02		16.3					15.25			1													
SG-03	-	4516+25	PS03-03		16					12			1													
SG-03	-	4517+35	PS03-04	4						8			1													
SG-03	1S016I094L056.9	4518+40	PS03-05			296									98	2		46.3		26.7	2					
SG-04		4534+65	PS04-01		12							19														
SG-04	1S016I094L056.60	4535+80	PS04-02			606.25									74.1			60.5		15						
SG-04		4538+50	W4-3		16						32															
SG-04		4540+00	ES04-01					120															2	2		
SG-04		4542+67	W12-1		16					12			1													
SG-04		4543+75	PS04-03	4						8			1													
SG-04		4544+90	ES04-03									42														1
SG-04	1S016I094L056.43	4545+35	PS04-04			323								67				56		5.8						
SG-04		4545+50	ES04-02					88															2	2		
SG-04		4548+40	W13-3		12							15														
SG-04		4549+50	PS04-05			45						36														
SG-04		4550+30	R5-1a	12								26														
SG-04		4540+17	ES04-04																						1	
SG-04		4545+35	ES04-05																						1	
SG-05		4553+50	R5-1	18								28														
SG-05		4555+00	ES05-01					80															2	2		
SG-05		4559+40	PS05-01		12							19														
SG-05		4560+10	ES05-04									38														1
SG-05		4561+09	ES05-05									16														1
SG-05		4562+35	ES05-06									15														1
SG-05		4563+35	W4-3		16						32															
SG-05		4569+50	ES05-02					80															2	2		
SG-05		4568+20	PS05-02	4						8			1													
SG-05		4571+00	ES05-03					120															2	2		
SG-05	1S016I094L055.94	4571+00	PS05-03			385								78				65.5		6.2						
SG-05		4573+68	W13-3		12							15														
SG-05		4574+40	PS05-04			45						36														
SG-05		4575+38	ES05-07									15														1
SG-05		4576+00	ES05-08									32														1
SG-05		4576+60	R5-1a	12								26														
SG-05		4571+00	ES05-09																						1	
SG-06		4577+16	ES06-05				2					34														1
SG-06		4579+75	R5-1	18								28														
SG-06		4581+87	ES06-03					73.5															2	2		
SG-06	1B016I094L055.73	4582+26	PS06-01			656.3											52									
SG-06		4582+26	ES06-02																			1				
SG-06		4586+70	W13-3		12							15														
SG-06		4587+22	PS06-02			45						36														
SG-06		4591+05	GM06-01			180			922										2.1							
SG-06		4594+60	PS06-05	4						8			1													
SG-06		4597+80	PS06-03		12							17														

REVISIONS	
NAME	DATE
2 ADDENDUM 2	8/07/06

ILLINOIS DEPARTMENT OF TRANSPORTATION
F.A.I. 90/94 (DAN RYAN EXPRESSWAY)
GARFIELD BLVD TO 31ST STREET (NB LOCAL LANES)

SCHEDULE OF QUANTITIES
FOR PROPOSED SIGNING

SCALE: NONE DRAWN BY: NJH
DATE: June 9, 2006 CHECKED BY: RMG

CTE | AECOM

p:\p40468\civil\8-cons\18 & 19-structr\signing plans\s18001ds.sht 8/8/2006 3:34:40 PM

F.A.I. RTE.	SECTION	COUNTY	TOTAL SHEETS	SHEET NO.
90/94	*	COOK	565	233
STA.		TO STA.		
FED. ROAD DIST. NO. 1	ILLINOIS	FED. AID PROJECT		

62301 * (2021-922 PT2 ETC 2324.6-1P) R-10

PROPOSED SIGNING SCHEDULE

SHEET NUMBER	STRUCTURE NUMBER	STATION	SIGN CALLOUT	SIGN PANEL-TYPE 1	SIGN PANEL-TYPE 2	SIGN PANEL-TYPE 3	REMOVE SIGN PANEL ASSEMBLY-TYPE B	REMOVE SIGN PANEL-TYPE 3	STRUCTURAL STEEL SIGN SUPPORT - BREAKAWAY	TELESCOPING STEEL SIGN SUPPORT	METAL POST - TYPE B	WOOD SIGN SUPPORT	BASE FOR TELESCOPING STEEL SIGN SUPPORT	OVERHEAD SIGN STRUCTURE - SPAN, TYPE I-A (4'-0" X 4'-6")	OVERHEAD SIGN STRUCTURE - SPAN, TYPE II-A (4'-6" X 5'-3")	OVERHEAD SIGN STRUCTURE - SPAN,TYPE III-A (5'-0" X 7'-0")	OVERHEAD SIGN STRUCTURE - BRIDGE MOUNTED	OVERHEAD SIGN STRUCTURE WALKWAY	CONCRETE FOUNDATIONS	DRILLED SHAFT CONCRETE FOUNDATIONS	REMOVE OVERHEAD SIGN STRUCTURE - SPAN	REMOVE OVERHEAD SIGN STRUCTURE - BRIDGE MOUNTED	REMOVE GROUND-MOUNTED SIGN SUPPORT	REMOVE CONCRETE FOUNDATION - GROUND MOUNT	REMOVE CONCRETE FOUNDATION - OVERHEAD	REMOVE AND RE-ERECT EXISTING SIGN
				SQ FT	SQ FT	SQ FT	EACH	SQ FT	POUND	FOOT	FOOT	FOOT	EACH	FOOT	FOOT	FOOT	FOOT	FOOT	CU YD	CU YD	EACH	EACH	EACH	EACH	EACH	EACH
SG-06		4599+00	ES06-04									15														1
SG-06	1S016I094L055.41	4599+00	PS06-04			85										70		47.5		10.7						
SG-06		4600+00	W4-1		16						32															
SG-06		4599+00	ES06-05				1																			
SG-07		4604+88	ES07-03									18							2							1
SG-07		4607+95	ES07-07																						1	
SG-07		4608+16	ES07-04	2				2				17														1
SG-07		4611+00	ES07-05									15														1
SG-07		4615+80	ES07-06									15														1
SG-07		4616+00	W4-3		16						32															
SG-07		4621+00	PS07-01	4						8			1													
SG-07	1B016I094L054.97	4622+31	PS07-02			639											54.5									
SG-07		4622+31	ES07-02																			1				
SG-08		4627+50	W13-3		12							15														
SG-08		4629-38	PS08-01			37.5						36														
SG-08		4630+00	R5-1a	12								26														
SG-08		4630+38	ES08-03									22														1
SG-08		4631+25	R5-1	18								28														
SG-08		4635+47	ES08-02																			1				
SG-08	1B016I094L054.72	4635+47	PS08-02			567											55									
			TOTALS	134	224.3	4,388.05	4	928.75	922	109.75	128	730	11	278	172.1	70	161.5	365.3	2.1	95.6	1	3	20	20	6	13
								2							2				2		2					

REVISIONS	
NAME	DATE
2 ADDENDUM 2	8/07/06

ILLINOIS DEPARTMENT OF TRANSPORTATION
F.A.I. 90/94 (DAN RYAN EXPRESSWAY)
GARFIELD BLVD TO 31ST STREET (NB LOCAL LANES)

SCHEDULE OF QUANTITIES
FOR PROPOSED SIGNING

SCALE: NONE DRAWN BY: NJH
DATE: June 9, 2006 CHECKED BY: RMG

CTE | AECOM

p:\p40460\civil\8-ctrs 18 & 19\sl\ctr 18\signing plans\ss180022ss.sl
8/8/2006 3:34:11 PM

F.A.I.	SECTION	COUNTY	TOTAL SHEETS	SHEET NO.
94/90 *		COOK	565	239
STA.		TO STA.		
FED. ROAD DIST. NO.	ILLINOIS	FED. AID PROJECT		

62301 *(2021-922 PT2 ETC 2324.6-1P) R-10

N:\GEOCADD\CIVIL\PLSHEETS\660_IBCSOI.dgn

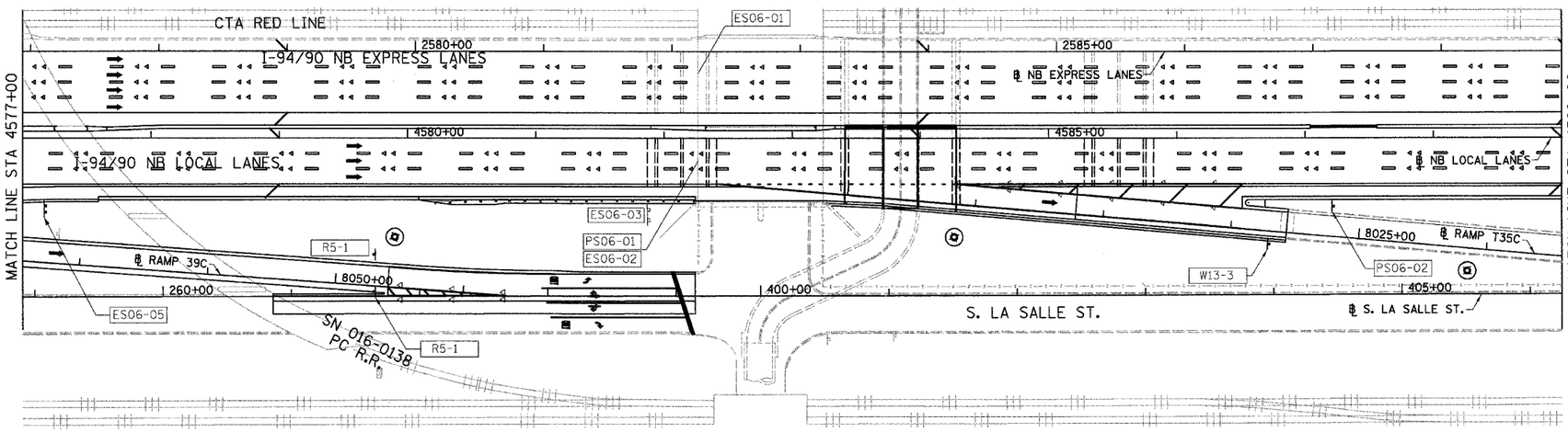

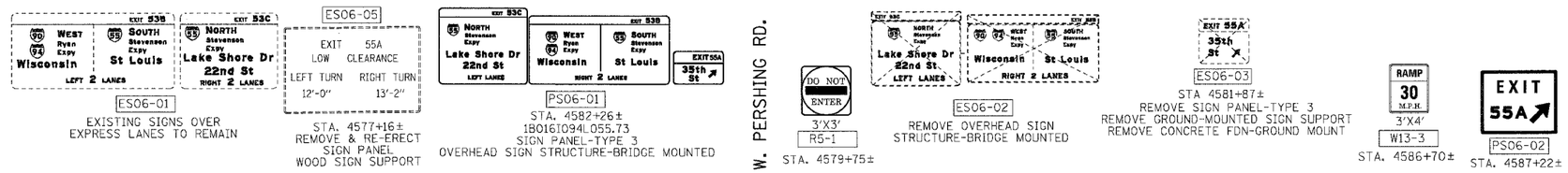

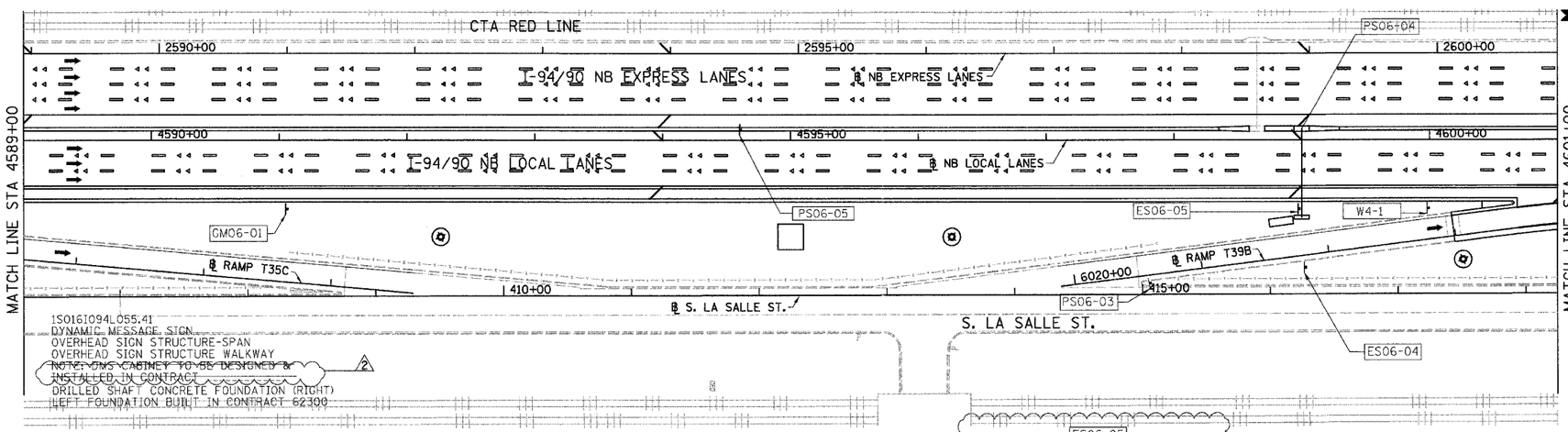

LEGEND:

ESXX-XX	EXISTING OVERHEAD OR CANTILEVER SIGNS
GSXX-XX	EXISTING POST MOUNTED SIGNS
PSXX-XX	PROPOSED SIGNS

NOTES:

1. FOR DETAILS OF THE DYNAMIC MESSAGE SIGN TRUSS SEE OVERHEAD SIGN STRUCTURE DETAIL SHEETS.
2. THE DYNAMIC MESSAGE SIGN WILL BE PROCURED BY IDOT CONTRACT 62947.
3. THE DYNAMIC MESSAGE SIGN WILL BE SUPPLIED BY IDOT CONTRACT 62583.
4. THE DYNAMIC MESSAGE SIGN SHALL BE FASTENED TO THE SIGN TRUSS BY THE CONTRACT 62301 CONTRACTOR. THE CONTRACTOR SHALL COORDINATE THE ERECTION OF THE SIGN TRUSS WITH CONTRACT 62583

0 50' 100'

SG-06

REVISIONS		
	NAME	DATE
	REVISED	06/23/06
2	ADDENDUM 2	8/04/06

ILLINOIS DEPARTMENT OF TRANSPORTATION

F.A.I. 94/90 (DAN RYAN EXPRESSWAY)

GARFIELD BLVD TO 31ST STREET (NB LOCAL LANES)

PROPOSED SIGNING PLANS

SCALE: 1"=50'

DRAWN BY: RV

DATE: 06/09/06

CHECKED BY: MSA

8/4/2006 11:57:53 AM

KAM ENGINEERING, INC.
CONSULTING ENGINEERS
707A Davis Road, Suite 205
Elgin, Illinois 60123-1369

F.A.I. RTE.	SECTION	COUNTY	TOTAL SHEETS	SHEET NO.
90/94	*	COOK	565	245
STA.		TO STA.		
FED. ROAD DIST. NO. 1	ILLINOIS	FED. AID PROJECT		

62301 * (2021-922 PT2 ETC 2324.6-1P) R-10

SIGN DETAIL

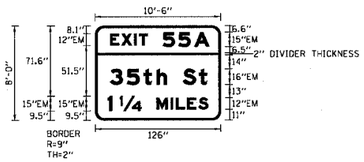

SIGN NUMBER	1S016I094RL56.9 LT	
WIDTH x HEIGHT	10'-6" x 8'-0"	
BORDER WIDTH	2"	
CORNER RADIUS	9"	
MOUNTING	OVERHEAD	
BACKGROUND	TYPE:	REFLECTIVE
	COLOR:	GREEN
LEGEND/BORDER	TYPE:	REFLECTIVE
	COLOR:	WHITE

SYMBOL	X	Y	WID	HT

DIMENSIONS ARE IN INCHES.TENTHS — LETTER LOCATIONS ARE PANEL EDGE TO LOWER LEFT CORNER

LETTER POSITIONS (X)

																LENGTH	SERIES, SIZE
E	X	I	T	5	5	A										99.4	EM12,EM15
15.2	26.4	39.3	44.1	67.9	83.7	99.6											
3	5	t	h		S	t										97.3	EM16/12
14.9	31.7	48.7	61.7	72	88	104.1											
1	1/4	M	I	L	E	S										100.9	EM15,EM12
12.6	24.5	61.5	75.6	81.1	92.4	103.6											

SIGN DETAIL

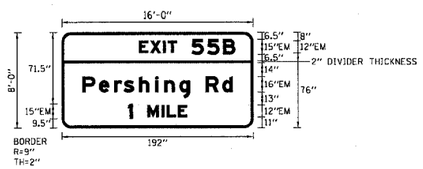

SIGN NUMBER	1S016I094L056.9	
WIDTH x HEIGHT	16'-0" x 8'-0"	
BORDER WIDTH	2"	
CORNER RADIUS	9"	
MOUNTING	OVERHEAD	
BACKGROUND	TYPE:	REFLECTIVE
	COLOR:	GREEN
LEGEND/BORDER	TYPE:	REFLECTIVE
	COLOR:	WHITE

SYMBOL	X	Y	WID	HT

DIMENSIONS ARE IN INCHES.TENTHS — LETTER LOCATIONS ARE PANEL EDGE TO LOWER LEFT CORNER

LETTER POSITIONS (X)

																LENGTH	SERIES, SIZE
E	X	I	T	5	5	B										96.4	EM12,EM15
77.6	88.9	101.7	106.5	130.3	146.1	162											
P	e	r	s	h	i	n	g		R	d						150.8	EM16/12
20.6	37.2	52.4	62.3	77.3	93.6	102.9	118	128.3	144.3	161.2							
1	M	I	L	E												59.1	EM15,EM12
66.4	85.9	100	105.4	116.7													

SIGN DETAIL

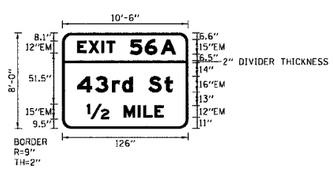

SIGN NUMBER	1S016I094L056.9 RT	
WIDTH x HEIGHT	10'-6" x 8'-0"	
BORDER WIDTH	2"	
CORNER RADIUS	9"	
MOUNTING	OVERHEAD	
BACKGROUND	TYPE:	REFLECTIVE
	COLOR:	GREEN
LEGEND/BORDER	TYPE:	REFLECTIVE
	COLOR:	WHITE

SYMBOL	X	Y	WID	HT

DIMENSIONS ARE IN INCHES.TENTHS — LETTER LOCATIONS ARE PANEL EDGE TO LOWER LEFT CORNER

LETTER POSITIONS (X)

																LENGTH	SERIES, SIZE
E	X	I	T	5	6	A										98.7	EM12,EM15
15.1	26.4	39.3	44.1	67.9	83	98.8											
4	3	r	d		S	t										95.6	EM16/12
14.9	32.9	49.8	60	70.3	86.2	102.4											
1/2	M	I	L	E												76.6	EM15,EM12
24.7	61.7	75.8	81.2	92.5													

TYPE II-A 10" PIPE TRUSS SUPPORT FRAME

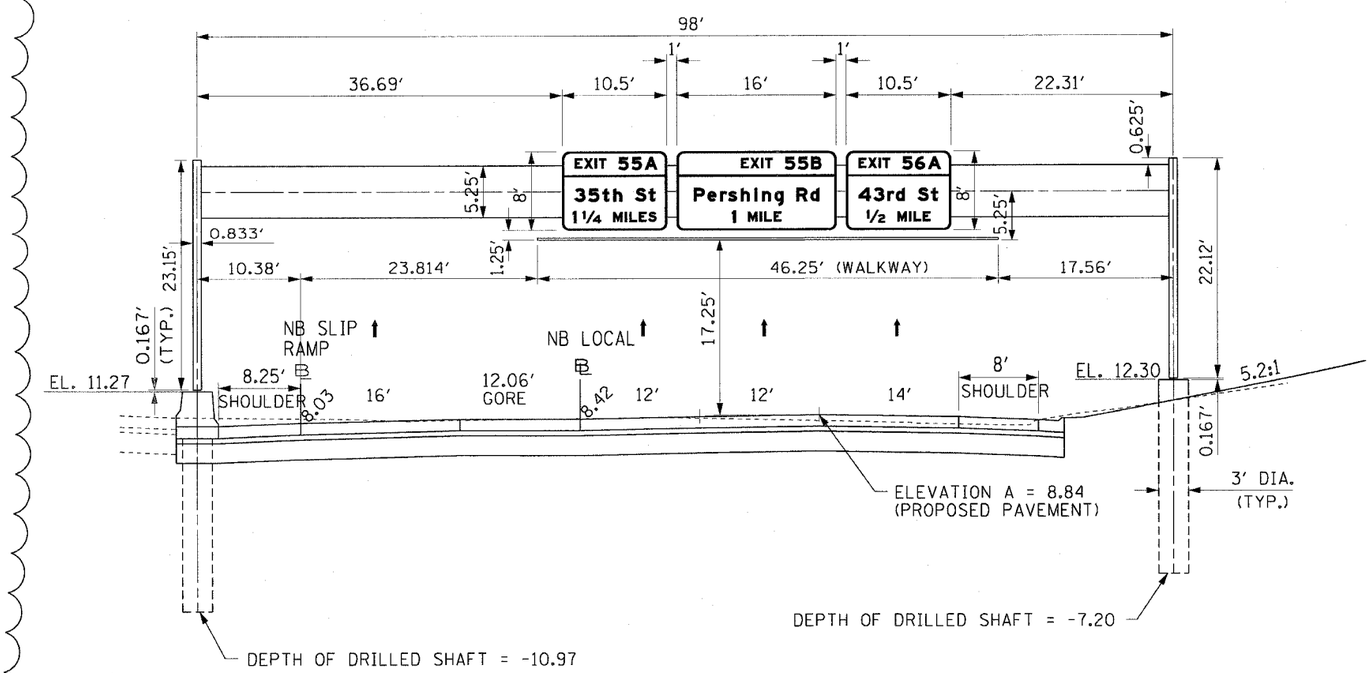

1S016I094L056.9
MOUNTING DETAIL
PROPOSED OVERHEAD SIGN STRUCTURE
STA 4518+40.00 N.B. LOCAL I-90/94
LOOKING NORTH

NOTES:

1. PROPOSED PAVEMENT FOR LOCAL LANES IS SHOWN FOR INFORMATION ONLY.
2. REFER TO ELECTRICAL INFRASTRUCTURE PLANS FOR ORIENTATION AND LOCATION OF THE CONDUIT EMBEDDED IN THE OVERHEAD SIGN FOUNDATIONS.

1

CTE | AECOM

SGN-3

REVISIONS	
NAME	DATE
Addendum 1	7/27/06

1

ILLINOIS DEPARTMENT OF TRANSPORTATION
F.A.I. 90/94 (DAN RYAN EXPRESSWAY)
GARFIELD BLVD TO 31ST STREET (NB LOCAL LANES)

SIGN PANEL AND PLACEMENT DETAILS
PROPOSED OVERHEAD SIGN STRUCTURE
STA. 4518+40.00

SCALE: NONE — DRAWN BY: JSS
DATE: June 9, 2006 — CHECKED BY: RDP

P:\P40460\CWIN8-Cntrs 18 & 19\SN\Cntr 18\Signing\S5160032A.sht
7/27/2006 12:35:23 PM

F.A.I. RTE.	SECTION	COUNTY	TOTAL SHEETS	SHEET NO.
94/90	*	COOK	565	246
STA.		TO STA.		
FED. ROAD DIST. NO.	ILLINOIS	FED. AID PROJECT		

* 62301 (2021-922 PT2 ETC 2324.6-1P) R-10

SIGN DETAIL
1:100

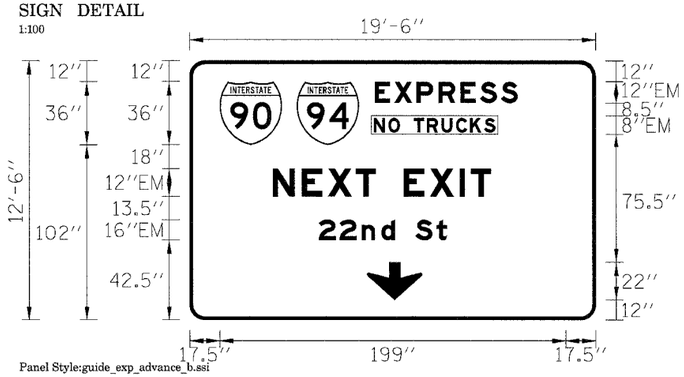

Panel Style:guide_exp_advance_b.ssi
Dimensions are in inches.tenths

Letter locations are panel edge to lower left corner

SIGN NUMBER	1S016I094L056.60
WIDTH x HGHT.	19'-6" x 12'-6"
BORDER WIDTH	2"
CORNER RADIUS	9"
MOUNTING	Overhead
BACKGROUND	TYPE: Reflective
	COLOR: Green
LEGEND/BORDER	TYPE: Reflective
	COLOR: White

SYMBOL	X	Y	WID	HT
M1_1	17.5	102	36	36
M1_1	61.7	102	36	36
ARDOWN	101	12	32	22

LETTER POSITIONS (X)																						LENGTH	SERIES-SIZE
E	X	P	R	E	S	S																	EM12
106.7	121.7	138.8	155.7	172.6	187.6	203.7																110	
N	O		T	R	U	C	K	S															EM8
106.1	114.5	121.2	129.2	136.7	145.1	153.6	161.6	169.7														70.2	
N	E	X	T		E	X	I	T															EM12
47.7	64.6	79.6	95.6	107.4	123.4	138.4	155.5	162														126	
2	2	n	d		S	t																	EM1612
74.3	86.4	99.1	110.4	118.1	130.1	142.2																74	

2

SIGN DETAIL
1:75

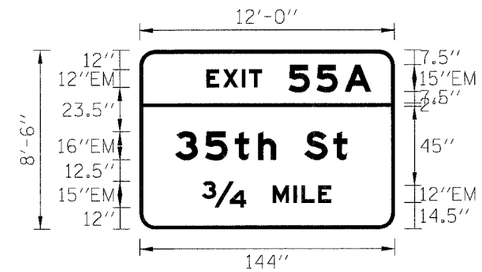

Dimensions are in inches.tenths

Letter locations are panel edge to lower left corner

SIGN NUMBER	1S016I094L056.43 LT
WIDTH x HGHT.	12'-0" x 8'-6"
BORDER WIDTH	2"
CORNER RADIUS	9"
MOUNTING	Overhead
BACKGROUND	TYPE: Reflective
	COLOR: Green
LEGEND/BORDER	TYPE: Reflective
	COLOR: White

SYMBOL	X	Y	WID	HT

LETTER POSITIONS (X)																						LENGTH	SERIES-SIZE
E	X	I	T	5	5	A																	EM12,EM15
37.7	47.1	57.8	61.8	84.2	100	115.8																93.1	
3	5	t	h		S	t																	EM1612
20	36.9	53.8	66.8	77.1	93.1	109.2																97.3	
34	M	I	L	E																			EM15,EM12
35.1	75.1	86.9	91.4	100.8																		73	

SIGN DETAIL
1:100

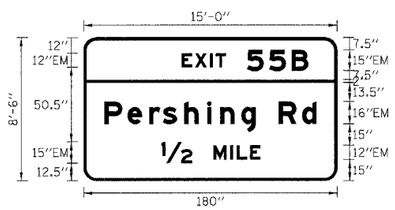

Panel Style:guide_exp_advance_b.ssi
Dimensions are in inches.tenths

Letter locations are panel edge to lower left corner

SIGN NUMBER	1S016I094L056.43 CN
WIDTH x HGHT.	15'-0" x 8'-6"
BORDER WIDTH	2"
CORNER RADIUS	9"
MOUNTING	Overhead
BACKGROUND	TYPE: Reflective
	COLOR: Green
LEGEND/BORDER	TYPE: Reflective
	COLOR: White

SYMBOL	X	Y	WID	HT

LETTER POSITIONS (X)																						LENGTH	SERIES-SIZE
E	X	I	T	5	5	B																	EM12,EM15
69.5	78.9	89.6	93.6	116	131.8	147.7																90.1	
P	e	r	s	h	i	n	g		R	d													EM1612
14.5	31.1	46.4	56.2	71.3	87.6	96.8	112	122.2	138.2	155.1												150.8	
12	M	I	L	E																			EM15,EM12
54.9	92.1	103.9	108.5	118																		70.5	

SIGN DETAIL
1:100

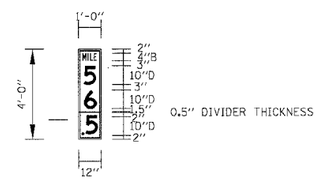

Panel Style:guide_exp_distance.ssi
Dimensions are in inches.tenths

Letter locations are panel edge to lower left corner

SIGN NUMBER	PS04-03
WIDTH x HGHT.	1'-0" x 4'-0"
BORDER WIDTH	0.5"
CORNER RADIUS	1.5"
MOUNTING	Barrier
BACKGROUND	TYPE: Reflective
	COLOR: Green
LEGEND/BORDER	TYPE: Reflective
	COLOR: White

SYMBOL	X	Y	WID	HT

LETTER POSITIONS (X)																						LENGTH	SERIES-SIZE
M	1	L	E																				B4
2.1	4.8	6	8.1																			7.5	
5																							D10
2.6																						6.8	
6																							D10
2.9																						6.8	
.																							D10
1.6																						1.5	
5																							D10
3.5																						6.8	

SGN-04

REVISIONS		
	NAME	DATE
2	ADDENDUM 2	8/04/06

ILLINOIS DEPARTMENT OF TRANSPORTATION
F.A.I. 90/94 (DAN RYAN EXPRESSWAY)
GARFIELD BLVD TO 31ST STREET (NB LOCAL LANES)
SIGN PANEL DETAILS

SCALE: NONE — DRAWN BY: RV
DATE: 06/09/06 — CHECKED BY: AS

KAM ENGINEERING, INC.
CONSULTING ENGINEERS
707A Davis Road, Suite 205
Elgin, Illinois 60123-1369

F.A.I. RTE.	SECTION	COUNTY	TOTAL SHEETS	SHEET NO.
94/90	*	COOK	565	247
STA.		TO STA.		
FED. ROAD DIST. NO.	ILLINOIS	FED. AID PROJECT		

* 62301 (2021-922 PT2 ETC 2324.6-1P) R-10

SIGN DETAIL
1:100

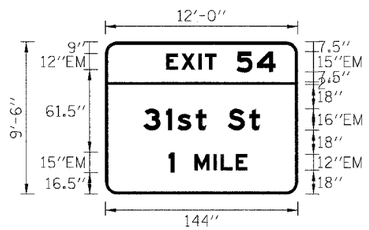

SIGN NUMBER	1S016I094L055.94 LT
WIDTH x HGHT.	12'-0" x 9'-6"
BORDER WIDTH	2"
CORNER RADIUS	9"
MOUNTING	Overhead
BACKGROUND	TYPE: Reflective
	COLOR: Green
LEGEND/BORDER	TYPE: Reflective
	COLOR: White

SYMBOL	X	Y	WID	HT

Panel Style:guide_exp_advance_b.ssi
Dimensions are in inches.tenths

Letter locations are panel edge to lower left corner

LETTER POSITIONS (X)																						LENGTH	SERIES/SIZE
E	X	I	T	5	4																		EM12,EM15
45.5	56.8	69.6	74.5	98.3	113.4																	81.8	
3	1	s	t		S	t																	EM1612
28.4	45.2	54.1	67.4	75.5	91.4	107.6																87.3	
1	M	I	L	E																			EM15,EM12
47.2	66.6	80.8	86.2	97.5																		59.1	

SIGN DETAIL
1:100

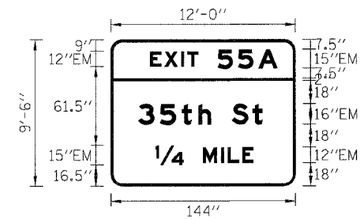

SIGN NUMBER	1S016I094L055.94 CN
WIDTH x HGHT.	12'-0" x 9'-6"
BORDER WIDTH	2"
CORNER RADIUS	9"
MOUNTING	Overhead
BACKGROUND	TYPE: Reflective
	COLOR: Green
LEGEND/BORDER	TYPE: Reflective
	COLOR: White

SYMBOL	X	Y	WID	HT

Panel Style:guide_exp_advance_b.ssi
Dimensions are in inches.tenths

Letter locations are panel edge to lower left corner

LETTER POSITIONS (X)																						LENGTH	SERIES/SIZE
E	X	I	T	5	5	A																	EM12,EM15
30.5	41.8	54.6	59.5	83.3	99.2	115.2																99.8	
3	5	t	h		S	t																	EM1612
21.2	38.1	55	68.1	78.3	94.3	110.4																97.3	
14	M	I	L	E																			EM15,EM12
34.5	71.6	85.8	91.2	102.5																		76.8	

SIGN DETAIL
1:100

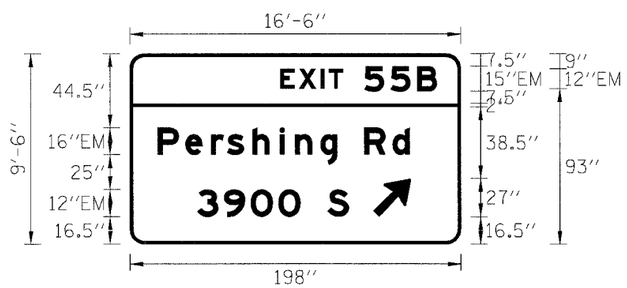

SIGN NUMBER	1S016I094R055.94 RT
WIDTH x HGHT.	16'-6" x 9'-6"
BORDER WIDTH	2"
CORNER RADIUS	9"
MOUNTING	Overhead
BACKGROUND	TYPE: Reflective
	COLOR: Green
LEGEND/BORDER	TYPE: Reflective
	COLOR: White

SYMBOL	X	Y	WID	HT
ARMED	145.5	16.5	22.3	35.1

Panel Style:guide_exp_advance_b.ssi
Dimensions are in inches.tenths

Letter locations are panel edge to lower left corner

LETTER POSITIONS (X)																						LENGTH	SERIES/SIZE
E	X	I	T	5	5	B																	EM12,EM15
89.9	101.2	114	118.9	140.3	156.1	171.9																94	
P	e	r	s	h	i	n	g		R	d													EM1612
16.5	33.1	48.4	58.2	73.3	89.6	98.8	114	124.2	140.2	157.1												150.8	
3	9	0	0		S																		EM12
40.1	56.1	72.2	88.8	102	118																	91	

2

SIGN DETAIL
1:75

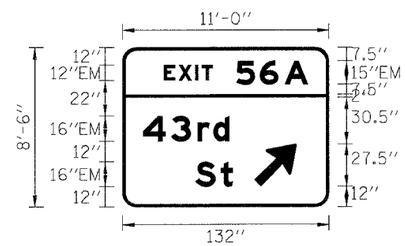

SIGN NUMBER	1S016I094L056.43 RT
WIDTH x HGHT.	11'-0" x 8'-6"
BORDER WIDTH	2"
CORNER RADIUS	9"
MOUNTING	Overhead
BACKGROUND	TYPE: Reflective
	COLOR: Green
LEGEND/BORDER	TYPE: Reflective
	COLOR: White

SYMBOL	X	Y	WID	HT
ARMED	84.2	12	22.3	35.1

Dimensions are in inches.tenths

Letter locations are panel edge to lower left corner

LETTER POSITIONS (X)																						LENGTH	SERIES/SIZE
E	X	I	T	5	6	B																	EM12,EM15
26.4	35.8	46.4	50.5	72.8	87.9	103.8																89.4	
4	3	r	d																				EM1612
12.9	31	47.9	58.1																			55.4	
S	t																						EM1612
46.5	62.6																					24.2	

SGN-05

REVISIONS	
NAME	DATE
2 ADDENDUM 2	8/04/06

ILLINOIS DEPARTMENT OF TRANSPORTATION
F.A.I. 90/94 (DAN RYAN EXPRESSWAY)
GARFIELD BLVD TO 31ST STREET (NB LOCAL LANES)
SIGN PANEL DETAILS

SCALE: NONE — RV
DATE: 06/09/06 — CHECKED BY: AS

KAM ENGINEERING, INC.
CONSULTING ENGINEERS
707A Davis Road, Suite 205
Elgin, Illinois 60123-1369

n:\666\cadd\ctnr\RXE\ADDENDUM_2\SS\R0009A.sht
8/4/2006 8:51:20 AM

F.A.I. RTE.	SECTION	COUNTY	TOTAL SHEETS	SHEET NO.
94/90	*	COOK	565	248
STA.		TO STA.		
FED. ROAD DIST. NO.	ILLINOIS	FED. AID PROJECT		

* 62301 (2021-922 PT2 ETC 2324.6-1P) R-10

SIGN DETAIL
1:100

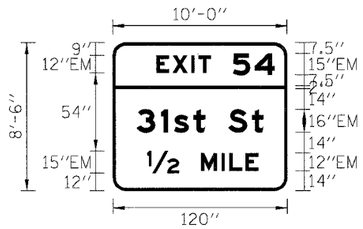

SIGN NUMBER	1S016I094L055.41 RT
WIDTH x HGHT.	10'-0" x 8'-6"
BORDER WIDTH	2"
CORNER RADIUS	9"
MOUNTING	Overhead
BACKGROUND	TYPE: Reflective
	COLOR: Green
LEGEND/BORDER	TYPE: Reflective
	COLOR: White

SYMBOL	X	Y	WID	HT

Panel Style:guide_exp_advance_b.ssi
Dimensions are in inches.tenths

Letter locations are panel edge to lower left corner

LETTER POSITIONS (X)

																						LENGTH	SERIES/SIZE
E	X	I	T	5	4																		EM12,EM15
29.9	41.2	54	58.9	82.7	97.7																	81.7	
3	1	s	t		S	t																	EM16/12
16.4	33.3	42.2	55.5	63.5	79.5	95.6																87.3	
12	M	I	L	E																			EM15,EM12
23.6	60.5	74.7	80.1	91.4																		76.6	

SIGN DETAIL
1:100

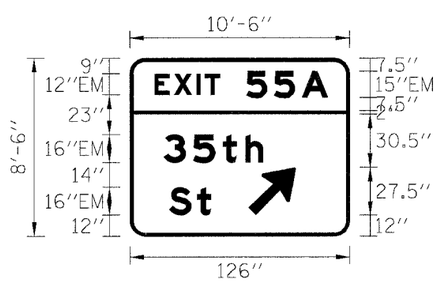

SIGN NUMBER	1B016I094L055.73 RT
WIDTH x HGHT.	10'-6" x 8'-6"
BORDER WIDTH	2"
CORNER RADIUS	9"
MOUNTING	Overhead
BACKGROUND	TYPE: Reflective
	COLOR: Green
LEGEND/BORDER	TYPE: Reflective
	COLOR: White

SYMBOL	X	Y	WID	HT
ARMED	67.9	12	22.3	35.1

Panel Style:guide_exp_advance_b.ssi
Dimensions are in inches.tenths

Letter locations are panel edge to lower left corner

LETTER POSITIONS (X)

																						LENGTH	SERIES/SIZE
E	X	I	T	5	5	A																	EM12,EM15
14	25.3	38.1	43	66.8	82.7	98.7																99.7	
3	5	t	h																				EM16/12
19.3	36.2	53.1	66.2																			57.1	
S	t																						EM16/12
22.2	38.4																					24.2	

KAM ENGINEERING, INC.
CONSULTING ENGINEERS
707A Davis Road, Suite 205
Elgin, Illinois 60123-1369

SIGN DETAIL
1:100

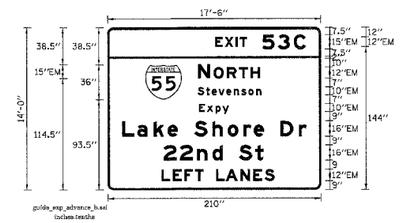

SIGN NUMBER	1B016I094L055.73 LT
WIDTH x HGHT.	17'-6" x 14'-0"
BORDER WIDTH	2"
CORNER RADIUS	9"
MOUNTING	Overhead
BACKGROUND	TYPE: Reflective
	COLOR: Green
LEGEND/BORDER	TYPE: Reflective
	COLOR: White

SYMBOL	X	Y	WID	HT
M1_1	37	93.4	36	36

Panel Style:guide_exp_advance_b.ssi
Dimensions are in inches.tenths

Letter locations are panel edge to lower left corner

LETTER POSITIONS (X)

																						LENGTH	SERIES/SIZE
E	X	I	T	5	3	C																	EM12,EM15
106.1	115.5	126.2	130.2	152.5	167.6	183.5																89.4	
N	O	R	T	H																			EM15,EM12
89	104.4	117.4	129.5	140.8																		61.3	
S	t	e	v	e	n	s	o	n															EM10/8
88.6	96.6	102.5	109.3	116.8	124.4	131.8	138.6	146.3														62.9	
E	x	p	y																				EM10/8
89.9	97.7	106.3	112.9																			29.6	
L	a	k	e		S	h	o	r	e		D	r											EM16/12
14	29	45.3	58.9	69.2	85.2	103.1	118.2	133.7	143.8	154.1	170.1	188.2										182.1	
2	2	n	d		S	t																	EM16/12
54.8	70.9	87.9	103	113.3	129.2	145.4																98.6	
L	E	F	T		L	A	N	E	S														EM12
52.7	64	75.3	85.7	94.5	106.5	116.2	130.7	143.3	154.6													111.7	

SGN-06

REVISIONS		
	NAME	DATE
2	ADDENDUM 2	8/04/06

ILLINOIS DEPARTMENT OF TRANSPORTATION
F.A.I. 90/94 (DAN RYAN EXPRESSWAY)
GARFIELD BLVD TO 31ST STREET (NB LOCAL LANES)

SIGN PANEL DETAILS

SCALE: NONE
DATE: 06/09/06
DRAWN BY: RV
CHECKED BY: AS

8/4/2006 8:52:48 AM
n:\680\cadd\civil\B\KENADDE\DGN\P-2\S3800097.dgn

F.A.I. RTE.	SECTION	COUNTY	TOTAL SHEETS	SHEET NO.
94/90	*	COOK	565	250
STA.		TO STA.		
FED. ROAD DIST. NO.	ILLINOIS	FED. AID PROJECT		

* 62301 (2021-922 PT2 ETC 2324.6-1P) R-10

SIGN DETAIL

1:100

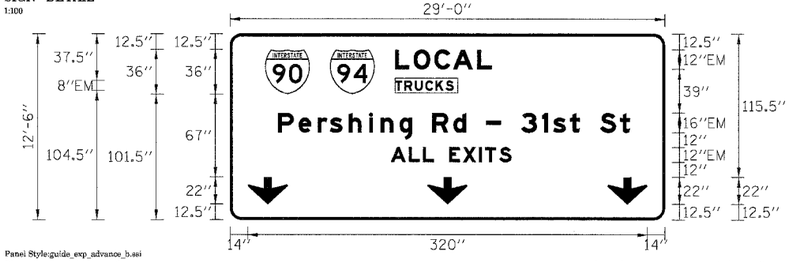

Panel Style:guide_exp_advance_b.ssi
Dimensions are in inches.tenths

Letter locations are panel edge to lower left corner

SIGN NUMBER	1B016I094L066.60
WIDTH x HGHT.	29'-0" x 12'-6"
BORDER WIDTH	2"
CORNER RADIUS	9"
MOUNTING	Overhead
BACKGROUND	TYPE: Reflective
	COLOR: Green
LEGEND/BORDER	TYPE: Reflective
	COLOR: White

SYMBOL	X	Y	WID	HT
M1_1	27.8	101.4	36	36
M1_1	79.8	101.4	36	36
ARDOWN	14	12.5	32	22
ARDOWN	158	12.5	32	22
ARDOWN	302	12.5	32	22

LETTER POSITIONS (X)

																																				LENGTH	SERIESSIZE
L	O	C	A	L																																	EM12
131.5	145.9	163.4	178.4	197.7																																77.6	
T	R	U	C	K	S																																EM8
131.8	139.4	147.8	158.2	164.3	172.4																															47.1	
P	e	r	s	h	i	n	g		R	d		-		3	1	s	t		S	t																	EM16/12
38.1	54.7	70	79.8	94.9	111.1	120.4	135.5	145.8	161.8	178.7	188.9	204.9	216.9	232.9	249.8	258.7	272	280	296	312.1																282.1	
A	L	L		E	X	I	T	S																													EM12
128.6	143	154.3	163.1	175.1	186.4	199.3	204.1	215.4																												96.6	

2

SIGN DETAIL

1:75

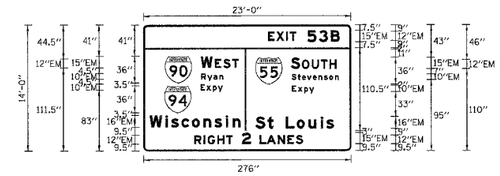

SIGN NUMBER	1B016I094L055.73 CN
WIDTH x HGHT.	23'-0" x 14'-0"
BORDER WIDTH	2"
CORNER RADIUS	9"
MOUNTING	Overhead
BACKGROUND	TYPE: Reflective
	COLOR: Green
LEGEND/BORDER	TYPE: Reflective
	COLOR: White

SYMBOL	X	Y	WID	HT
M1_1	28.4	91	36	36
M1_1	148.7	89.2	36	36
M1_1	27.5	51.3	36	36

Panel Style:guide_exp_advance_b.ssi
Dimensions are in inches.tenths

Letter locations are panel edge to lower left corner

LETTER POSITIONS (X)

																																				LENGTH	SERIESSIZE
E	X	I	T	5	3	B																															EM12,EM15
165.5	176.8	189.6	194.5	218.3	233.4	249.2																														95.7	
W	E	S	T																																		EM15,EM12
76.1	94.6	105.9	118																																	50.7	
S	O	U	T	H																																	EM15,EM12
196	210.8	223.8	235.8	247.1																																60.7	
R	y	a	n																																		EM10/8
76.5	84.8	92.8	101																																	29.6	
S	t	c	v	c	n	s	o	n																													EM10/8
196.9	205	210.8	217.6	225.1	232.8	240.1	247	254.7																												62.9	
E	x	p	y																																		EM10/8
75.6	83.5	92	98.7																																	29.5	
E	x	p	y																																		EM10/8
197.4	205.2	213.8	220.4																																	29.5	
W	i	s	c	o	n	s	i	n																													EM16/12
8	29	36.6	50.2	64.1	79.6	94.3	109.3	118.5																												120.7	
S	t		L	o	u	i	s																														EM16/12
148.7	164.8	172.9	188.9	203.9	219.3	235.6	243.2																													104.7	
R	I	G	H	T	2	L	A	N	E	S																											EM12,EM15
67.1	79.7	85.2	97.8	109.9	130.6	154.3	164	178.4	191.1	202.4																										145.1	

2

SIGN DETAIL

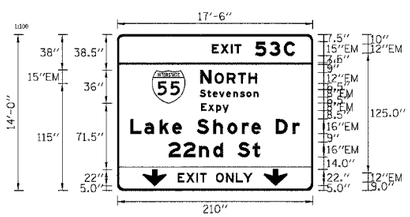

SIGN NUMBER	1B016I094L054.72 LT
WIDTH x HGHT.	17'-6" x 14'-0"
BORDER WIDTH	2"
CORNER RADIUS	9"
MOUNTING	Overhead
BACKGROUND	TYPE: Reflective
	COLOR: Green/Yellow
LEGEND/BORDER	TYPE: Reflective
	COLOR: White /Black

SYMBOL	X	Y	WID	HT
M1_1	37	98.5	36	36
ARDOWN	33	5	32	22
ARDOWN	177	5	32	22

Panel Style:guide_exp_advance_b.ssi
Dimensions are in inches.tenths

Letter locations are panel edge to lower left corner

LETTER POSITIONS (X)

																																				LENGTH	SERIESSIZE
E	X	I	T	5	3	C																															EM12,EM15
101.7	111.1	121.7	125.8	148.1	163.2	179.1																														89.4	
N	O	R	T	H																																	EM15,EM12
89	104.4	117.4	129.5	140.8																																61.3	
S	t	e	v	e	n	s	o	n																													EM10/8
88.6	96.6	102.5	109.3	116.8	124.4	131.8	138.6	146.3																												62.8	
E	x	p	y																																		EM10/8
89.9	97.7	106.3	112.9																																	29.5	
L	a	k	e		S	h	o	r	e		D	r																									EM16/12
14	29	45.3	58.9	69.2	85.2	103.1	118.2	133.7	143.9	154.1	170.1	188.2																								182.1	
2	2	n	d		S	t																															EM16/12
54.8	70.9	87.9	103	113.3	129.3	145.4																														98.6	
E	X	I	T		O	N	L	Y																													EM12
64.6	74	84.7	88.5	95.9	105.9	116.7	127.3	135.3																												80.6	

2

KAM ENGINEERING, INC.
CONSULTING ENGINEERS
707A Davis Road, Suite 205
Elgin, Illinois 60123-1369

SGN-08

REVISIONS		
	NAME	DATE
2	ADDENDUM 2	8/04/06

ILLINOIS DEPARTMENT OF TRANSPORTATION
F.A.I. 90/94 (DAN RYAN EXPRESSWAY)

GARFIELD BLVD TO 31ST STREET (NB LOCAL LANES)

SIGN PANEL DETAILS

SCALE: NONE — DRAWN BY: RV
DATE: 06/09/06 — CHECKED BY: AS

n:\660\cad\civil\NOXE\MODERNOW_2\S\80033AM.dgn
8:57:19 AM
8/4/2006

F.A.I. RTE.	SECTION	COUNTY	TOTAL SHEETS	SHEET NO.
94/90	*	COOK	565	251
STA.		TO STA.		
FED. ROAD DIST. NO.	ILLINOIS	FED. AID PROJECT		

* 62301 (2021-922 PT2 ETC 2324.6-1P) R-10

SIGN DETAIL
1:100

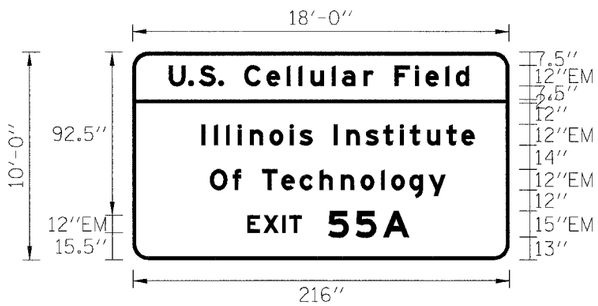

SIGN NUMBER	4591+05
WIDTH x HGHT.	18'-0" x 10'-0"
BORDER WIDTH	2"
CORNER RADIUS	9"
MOUNTING	Ground Mount
BACKGROUND	TYPE: Reflective
	COLOR: Green
LEGEND/BORDER	TYPE: Reflective
	COLOR: White

SYMBOL	X	Y	WID	HT

Panel Style:guide_exp_advance_b.ssi
Dimensions are ininches.tenths

Letter locations are panel edge to lower left corner

LETTER POSITIONS (X)

																						LENGTH	SERIESSIZE
U	.	S	.		C	e	l	l	u	l	a	r		F	i	e	l	d					EM129
20.6	31.7	37.8	49	52	64	76.8	88.2	95.1	101.9	114.2	120.1	132.4	138.2	150.2	162	168	179.4	185.3				172.4	
I	l	l	i	n	o	i	s		I	n	s	t	i	t	u	t	e						EM129
39.3	46.5	53.4	60.1	67.1	78.4	89.9	95.6	103.3	115.3	122.5	133.6	143.5	153.2	159	168.7	179.8	188.5					157	
O	f		T	e	c	h	n	o	l	o	g	y											EM129
44.3	57.2	62.1	74.1	85.2	95.7	107.1	119.4	130.7	142.3	148.2	158.8	169.8										135.3	EM12,EM15
E	X	I	T	5	5	A																	
65.5	74.9	85.6	89.7	112	127.8	143.7																93.1	

2

SIGN DETAIL
1:100

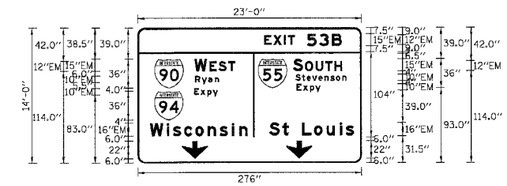

SIGN NUMBER	1B0161094L054.97 CN 1B0161094L054.72 RT
WIDTH x HGHT.	23'-0" x 14'-0"
BORDER WIDTH	2"
CORNER RADIUS	9"
MOUNTING	Overhead
BACKGROUND	TYPE: Reflective
	COLOR: Green
LEGEND/BORDER	TYPE: Reflective
	COLOR: White

SYMBOL	X	Y	WID	HT
MI_1	20.7	93.2	36	36
MI_1	148.4	93.1	36	36
MI_1	20.4	53.4	36	36
ARDOWN	54	6	32	22
ARDOWN	210	6	32	22

Panel Style:guide_exp_advance_b.ssi
Dimensions are ininches.tenths

Letter locations are panel edge to lower left corner

LETTER POSITIONS (X)

																						LENGTH	SERIESSIZE
E	X	I	T	5	3	B																	EM12,EM15
156.2	167.5	180.3	185.1	208.9	224	239.9																95.7	
W	E	S	T																				EM15,EM12
69.9	88.4	99.7	111.7																			50.7	
S	O	U	T	H																			EM15,EM12
191.6	206.4	219.4	231.4	242.7																		60.7	
S	t	e	v	e	n	s	o	n															EM108
194.6	202.6	208.5	215.3	222.8	230.4	237.8	244.6	252.3	257.5													63.8	
R	y	a	n																				EM108
70.7	78.9	86.9	95.1																			29.6	
E	x	p	y																				EM108
196	203.9	212.4	219.1																			29.6	
E	x	p	y																				EM108
69.5	77.3	85.9	92.5																			29.5	
W	i	s	c	o	n	s	i	n															EM1612
14.8	35.7	43.3	57	70.9	86.3	101.1	116	125.3														120.7	
S	t		L	o	u	i	s																EM1612
162.2	178.3	186.3	202.3	217.3	232.8	249.1	256.7															104.7	

2

SIGN DETAIL
1:100

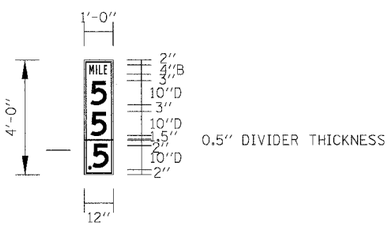

SIGN NUMBER	PS06-05
WIDTH x HGHT.	1'-0" x 4'-0"
BORDER WIDTH	0.5"
CORNER RADIUS	1.5"
MOUNTING	Barrier
BACKGROUND	TYPE: Reflective
	COLOR: Green
LEGEND/BORDER	TYPE: Reflective
	COLOR: White

SYMBOL	X	Y	WID	HT

Panel Style:guide_exp_distance.ssi
Dimensions are ininches.tenths

Letter locations are panel edge to lower left corner

LETTER POSITIONS (X)

																						LENGTH	SERIESSIZE
M	I	L	E																				B4
2.1	4.8	6	8.1																			7.5	
5																							D10
2.6																						6.8	
5																							D10
2.9																						6.8	
.																							D10
1.6																						1.5	
5																							D10
3.5																						6.8	

SIGN DETAIL
1:100

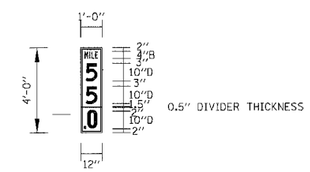

SIGN NUMBER	PS07-01
WIDTH x HGHT.	1'-0" x 4'-0"
BORDER WIDTH	0.5"
CORNER RADIUS	1.5"
MOUNTING	Barrier
BACKGROUND	TYPE: Reflective
	COLOR: Green
LEGEND/BORDER	TYPE: Reflective
	COLOR: White

SYMBOL	X	Y	WID	HT

Panel Style:guide_exp_distance.ssi
Dimensions are ininches.tenths

Letter locations are panel edge to lower left corner

LETTER POSITIONS (X)

																						LENGTH	SERIESSIZE
M	I	L	E																				B4
2.1	4.8	6	8.1																			7.5	
5																							D10
2.6																						6.8	
5																							D10
2.9																						6.8	
.																							D10
1.6																						1.5	
0																							D10
3.5																						6.8	

SGN-09

REVISIONS		
	NAME	DATE
2	ADDENDUM 2	8/04/06

ILLINOIS DEPARTMENT OF TRANSPORTATION
F.A.I. 90/94 (DAN RYAN EXPRESSWAY)

GARFIELD BLVD TO 31ST STREET (NB LOCAL LANES)

SIGN PANEL DETAILS

SCALE: NONE — DRAWN BY: RV
DATE: 06/09/06 — CHECKED BY: AS

KAM ENGINEERING, INC.
CONSULTING ENGINEERS
707A Davis Road, Suite 205
Elgin, Illinois 60123-1369

8/4/2006 9:00:18 AM

n:\0250\cad\CNTR\MEN\NODENDUM_2\SIGN09SN42.sm

F.A.I. RTE.	SECTION	COUNTY	TOTAL SHEETS	SHEET NO.
94/90	*	COOK	565	252
STA.		TO STA.		
FED. ROAD DIST. NO.	ILLINOIS	FED. AID PROJECT		

* 62301 (2021-922 PT2 ETC 2324.6-1P) R-10

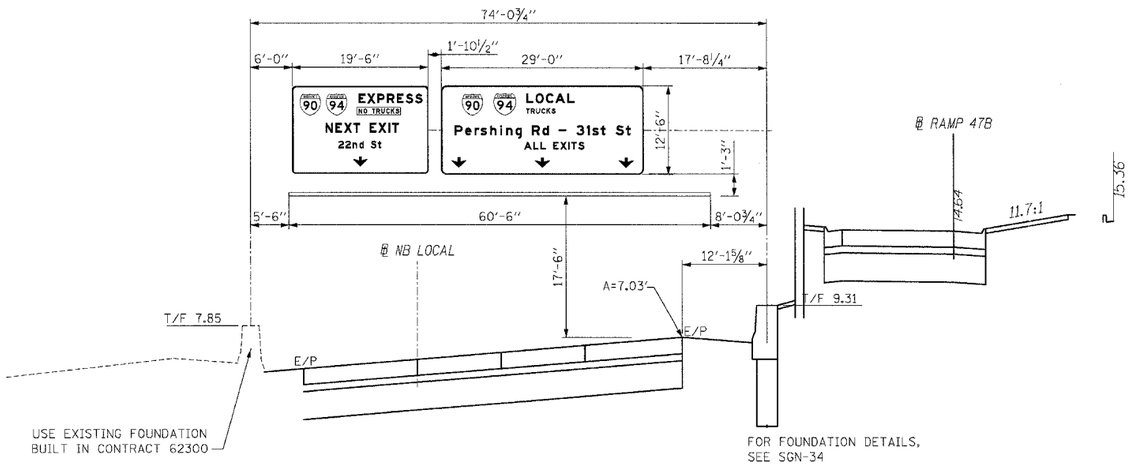

LOCAL LANES NORTH BOUND
1S016I094L056.60
STA. 4535+80±

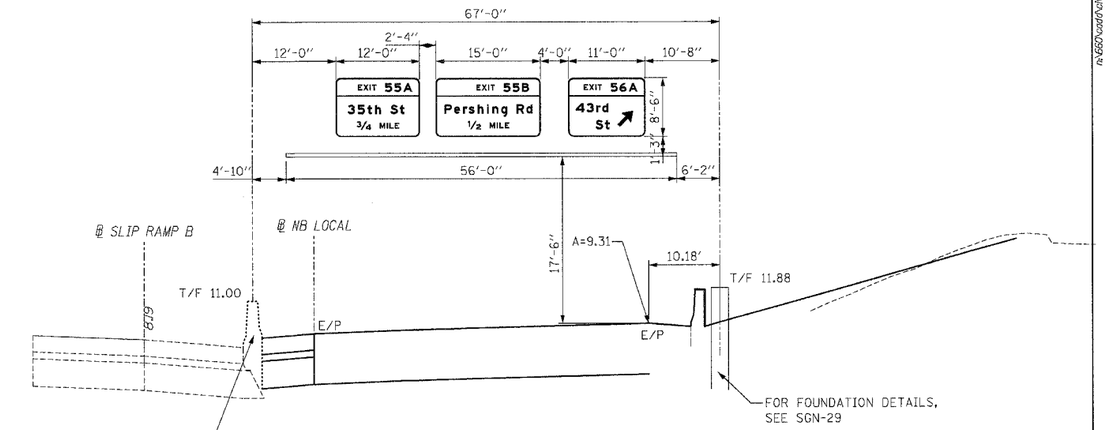

LOCAL LANES NORTH BOUND
1S016I094L056.43
STA. 4545+35±

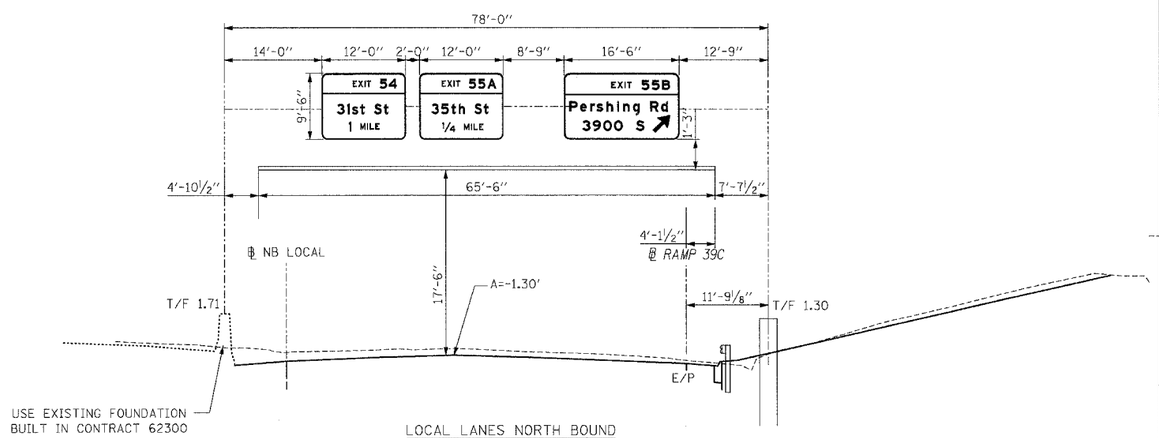

LOCAL LANES NORTH BOUND
1S016I094L055.94
STA. 4571+00±

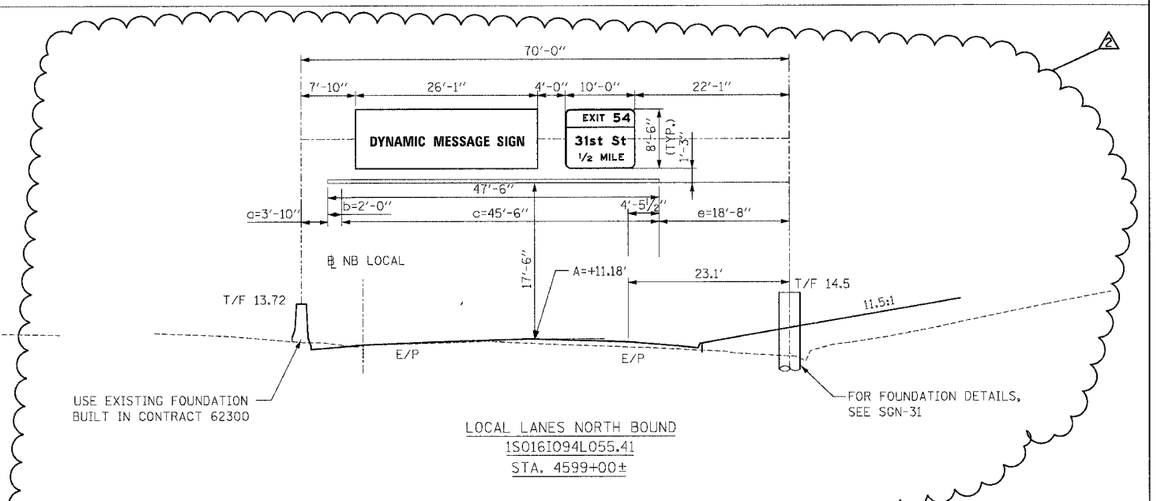

LOCAL LANES NORTH BOUND
1S016I094L055.41
STA. 4599+00±

NOTES:

1. PROPOSED PAVEMENT FOR LOCAL LANES IS SHOWN FOR INFORMATION ONLY.
2. REFER TO ELECTRICAL INFRASTRUCTURE PLANS FOR ORIENTATION AND LOCATION OF THE CONDUIT EMBEDDED IN THE OVERHEAD SIGN FOUNDATIONS.
3. THE DYNAMIC MESSAGE SIGN SHALL BE FASTENED TO THE SIGN TRUSS BY THE CONTRACT 62303 CONTRACTOR. THE CONTRACTOR SHALL COORDINATE THE ERECTION OF THE SIGN TRUSS WITH CONTRACT 62583.
4. THE FABRICATOR SHALL COORDINATE WITH THE MANUFACTURER OF THE DYNAMIC MESSSAGE SIGN (DMS) TO DETERMINE THE ACTUAL SIZE, WEIGHT AND MOUNTING DETAILS OF THE DMS BEFORE ORDERING OR FABRICATING ANY MATERIALS FOR THE TRUSS OR WALKWAY/SIGN SUPPORTS.

SGN-10

REVISIONS	
NAME	DATE
ADDENDUM 2	8/04/06

ILLINOIS DEPARTMENT OF TRANSPORTATION
F.A.I. 90/94 (DAN RYAN EXPRESSWAY)

GARFIELD BLVD TO 31ST STREET (NB LOCAL LANES)

SIGN PLACEMENT DETAILS

SCALE: NONE — DRAWN BY: RV
DATE: 06/09/06 — CHECKED BY: MSA

KAM ENGINEERING, INC.
CONSULTING ENGINEERS
707A Davis Road, Suite 205
Elgin, Illinois 60123-1369

F.A.I. RTE.	SECTION	COUNTY	TOTAL SHEETS	SHEET NO.
94/90	*	COOK	565	253
STA.		TO STA.		
FED. ROAD DIST. NO.	ILLINOIS	FED. AID PROJECT		

* 62301 (2021-922 PT2 ETC 2324.6-1P) R-10

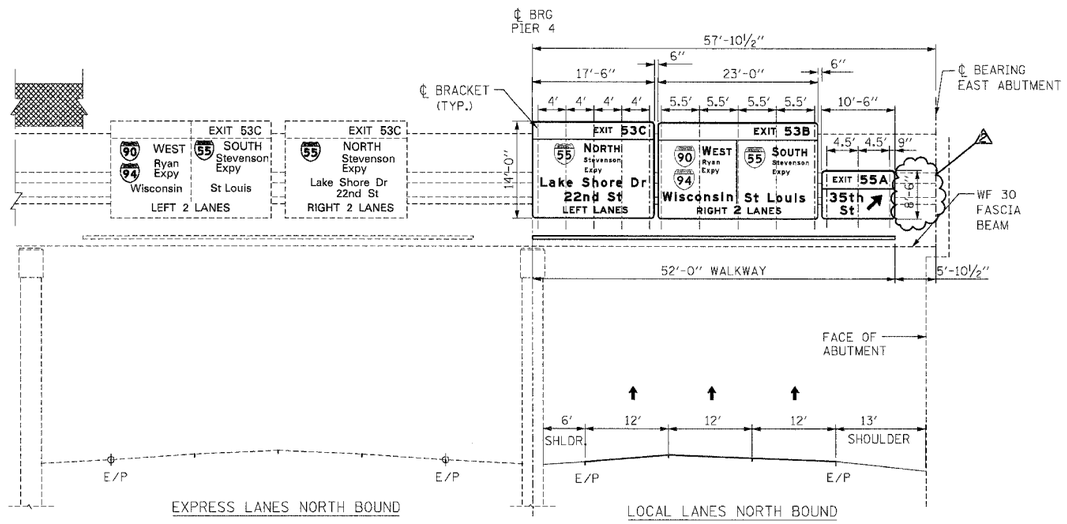

PERSHING ROAD (39TH ST) BRIDGE ELEVATION
1B016I094L055.73
STA. 4582+26±

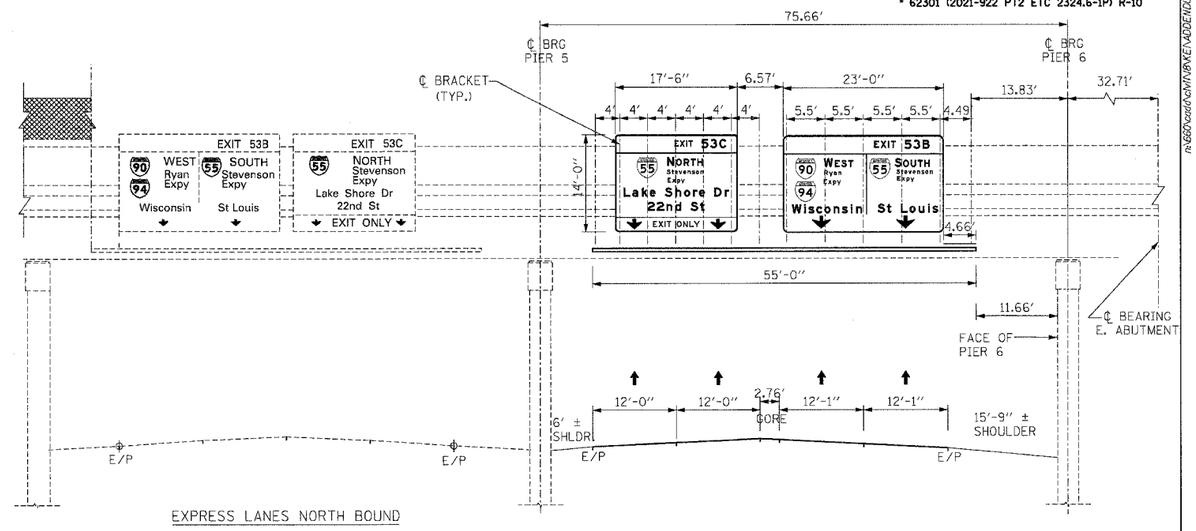

31st STREET BRIDGE ELEVATION
1B016I094L054.72
STA. 4635+47±

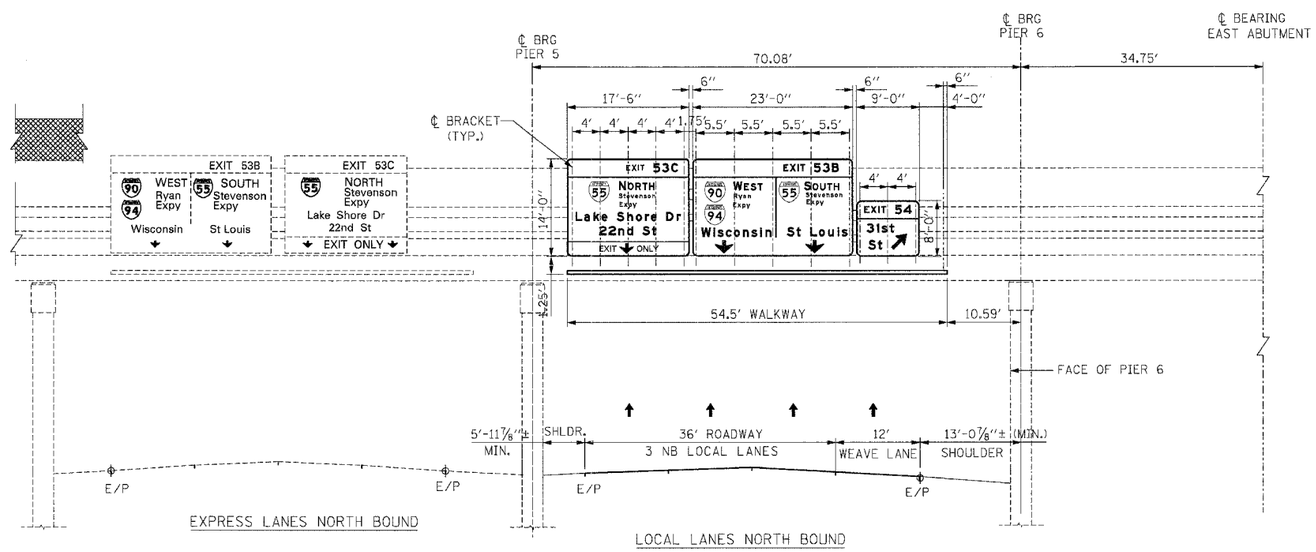

33rd STREET BRIDGE ELEVATION
1B016I094L054.97
STA. 4622+31±

SGN-11

REVISIONS		
	NAME	DATE
2	ADDENDUM 2	8/04/06

ILLINOIS DEPARTMENT OF TRANSPORTATION
F.A.I. 90/94 (DAN RYAN EXPRESSWAY)
GARFIELD BLVD TO 31ST STREET (NB LOCAL LANES)
SIGN PLACEMENT DETAILS

SCALE: NONE — DRAWN BY: RV
DATE: 06/09/06 — MSA

KAM ENGINEERING, INC.
CONSULTING ENGINEERS
707A Davis Road, Suite 205
Elgin, Illinois 60123-1369

8/4/2006 9:05:57 AM

ROUTE NO.	SECTION	COUNTY	TOTAL SHEETS	SHEET NO.
F.A.I. RTE. 90/94	*	COOK	565	254
FED. ROAD DIST. NO. 1		ILLINOIS	FED. AID PROJECT	

* (1818, ETC. 2324.6-IPI R-10) 62301

STATE OF ILLINOIS
DEPARTMENT OF TRANSPORTATION

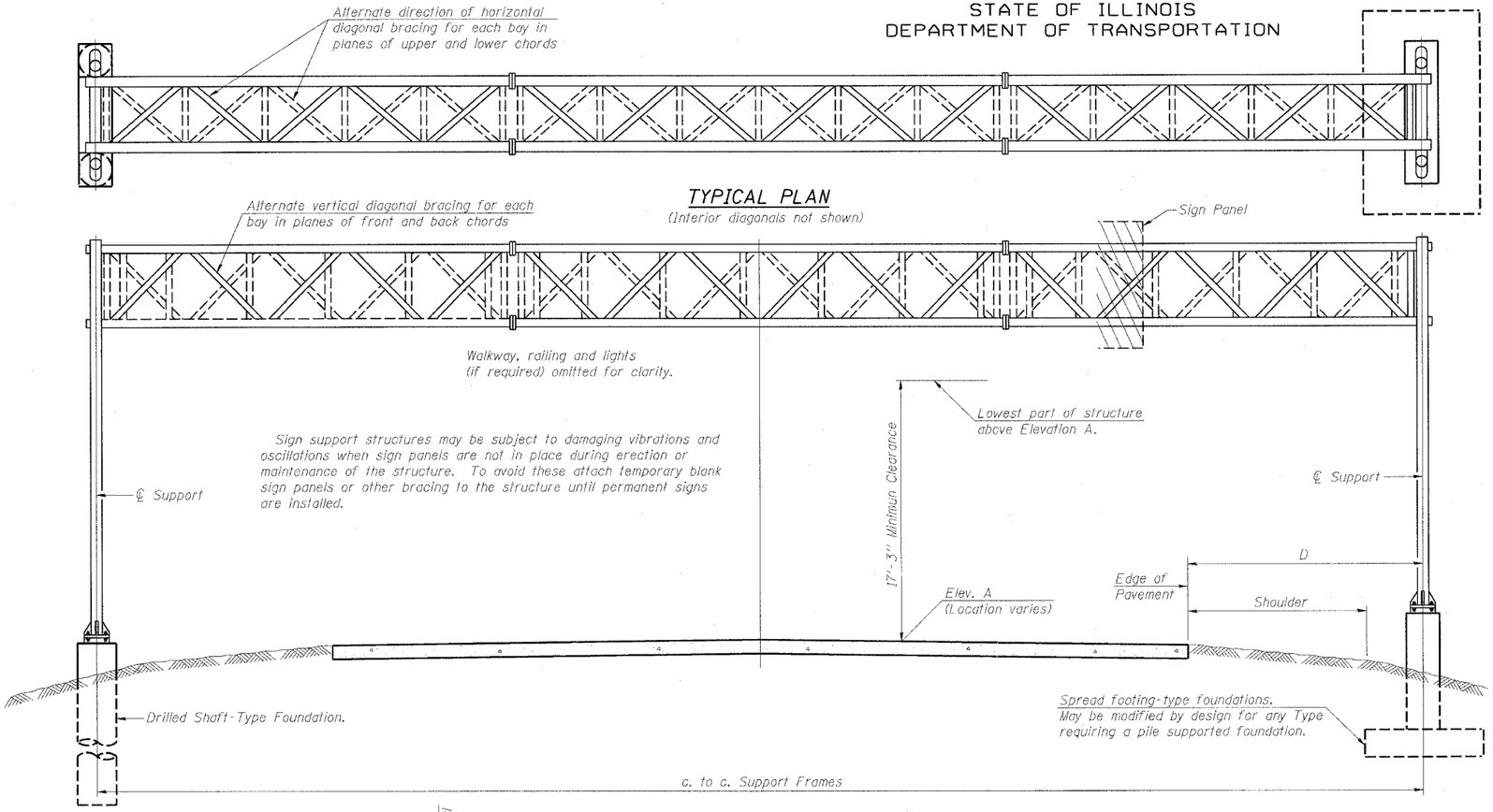

TYPICAL PLAN

(Interior diagonals not shown)

TYPICAL ELEVATION

(Looking at Face of Signs**)

Elev. A = Elevation at point of minimum clearance to sign, walkway support or truss.

Structure Number	Station	Design Truss Type	c. to c. Supports	Elev. A	Dim. D	Height of Tallest Sign	Total Sign Area
IS016I094L056.60	4535+80	II-A	74'-0¾"	7.03'	12.14'	12.5'	606.0 SF
IS016I094L056.43	4545+35	I-A	67.00'	9.31'	10.18'	8.5'	323.0 SF
IS016I094L055.94	4571+00	I-A	78.00'	-1.3'	11.76'	9.5'	385.0 SF
IS016I094L055.41	4599+00	III-A	70.00'	11.18'	23.12'	8.5'	307.0 SF

**Looking upstation for structures with signs both sides.

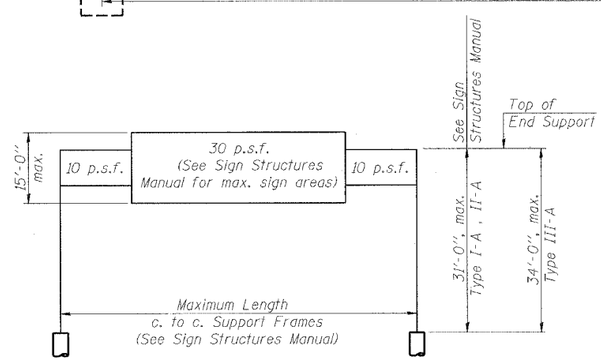

DESIGN WIND LOADING DIAGRAM

Parameters shown are basis for I.D.O.T. Standards and Sign Manual Tables. Installations not within dimensional limits shown require special analysis for all components.

GENERAL NOTES

DESIGN: AASHTO Standard Specifications for Structural Supports for Highway Signs, Luminaires and Traffic Signals. *"AASHTO Specifications"*

CONSTRUCTION: Current *at time of letting* Illinois Department of Transportation Standard Specifications for Road and Bridge Construction, Supplemental Specifications and Special Provisions. *"Standard Specifications"*

LOADING: 90 M.P.H. WIND VELOCITY

WIND LOADING: 30 p.s.f. normal to Sign Panel Area and truss elements not behind sign Loading Diagram.

WALKWAY LOADING: Dead load plus 500 lbs. concentrated live load.

DESIGN STRESSES:
Field Units
f'_c = 3,500 p.s.i.
fy = 60,000 p.s.i. *reinforcement*

WELDING: All welds to be continuous unless otherwise shown. All welding to be done in accordance with current AWS D1.1 and D1.2 Structural Welding Codes *Steel and Aluminum* and the Standard Specificiations.

MATERIALS: Aluminum Alloys as shown throughout plans. All Structural Steel Pipe shall be ASTM A53 Grade B with a minimum yield of 35,000 p.s.i., or A500 Grade B or C with a minimum yield of 46,000 p.s.i. If A500 pipe is substituted for A53, then the outside diameter shall be as detailed and wall thickness greater than or equal to A53.
All Structural Steel Plates and Shapes shall conform to AASHTO M270 Gr. 36, Gr. 50 or Gr. 50W*. Stainless steel for shims, sleeves and handhole covers shall be ASTM A240, Type 302 or 304, or another alloy suitable for exterior exposure and acceptable to the Engineer.
The steel pipe and stiffening ribs at the base plate for the column shall have a minimum longitudinal Charpy V-Notch *CVN* energy of 15 lb.-ft. at 40* F. *Zone 2* before galvanizing.

FASTENERS FOR ALUMINUM TRUSSES: All bolts noted as "high strength" must satisfy the requirements of AASHTO M164 *ASTM A325*, or approved alternate, and must have matching lock nuts. Threaded studs for splices *if Members interfere* must satisfy the requirements of ASTM A449. ASTM A193, Grade B7, or approved alternate, and must have matching lock nuts. Bolts and lock nuts not required to be high strength must satisfy the requirements of ASTM A307. All bolts and lock nuts must be hot dip galvanized per AASHTO M232. The lock nuts must have nylon or steel inserts. A stainless steel flat washer conforming to ASTM A240 Type 302 or 304, is required under both head and nut or under both nuts where threaded studs are used. High strength bolt installation shall conform to Article 505.04 *1* *2*d of the IDOT Standard Specifications for Road and Bridge Construction. Rotational capacity *"ROCAP"* testing of bolts will not be required.

U-BOLTS AND EYEBOLTS: U-Bolts and Eyebolts must be produced from ASTM A276 Type 304, 304L, 316 or 316L, Condition A, cold finished stainless steel, or an equivalent material acceptable to the Engineer. All nuts for U-Bolts and Eyebolts must be lock nuts equivalent to ASTM A307 with nylon or steel inserts and hot dip galvanized per AASHTO M232. A stainless steel flat washer conforming to ASTM A240, Type 302 or 304, is required under each U-Bolt and Eyebolt lock nut.

GALVANIZING: All Steel Grating, Plates, Shapes and Pipe shall be Hot Dip Galvanized after fabrication in accordance with AASHTO M111. Painting is not permitted.

ANCHOR RODS: Shall conform to AASHTO M314 Gr. 36 or 55 with a minimum Charpy V-Notch *CVN* energy of 15 lb.-ft. at 40* F.

CONCRETE SURFACES: All concrete surfaces above an elevation 6" below the lowest final ground line at each foundation shall be cleaned and coated with Bridge Seat Sealer in accordance with the Standard Specifications.

REINFORCEMENT BARS: Reinforcement Bars designated *E* shall be epoxy coated in accordance with the Standard Specifications.

SGN-12

* If M270 Gr. 50W *M222* steel is proposed, chemistry for plate to be used shall first be approved by the Engineer as suitable for galvanizing and welding.

TOTAL BILL OF MATERIAL

ITEM	UNIT	TOTAL
OVERHEAD SIGN STRUCTURE TYPE I-A (4'-0" x 4'-6")	Foot	278
OVERHEAD SIGN STRUCTURE TYPE II-A (4'-6" x 5'-3")	Foot	172.1
OVERHEAD SIGN STRUCTURE TYPE III-A (5'-0" x 7'-0")	Foot	70
OVERHEAD SIGN STRUCTURE WALKWAY TYPE A	Foot	365.3
CONCRETE FOUNDATIONS	Cu. Yds.	-
DRILLED SHAFT CONCRETE FOUNDATIONS	Cu. Yds.	95.6

NUMBER	REVISION	DATE
2	MSA/AS	8/7/06

DESIGNED	AC
CHECKED	AS
DRAWN	RV
CHECKED	MSA

20
EXAMINED
ENGINEER OF STRUCTURAL SERVICES
PASSED
ENGINEER OF BRIDGES AND STRUCTURES

OS-A-1 1-7-05

OVERHEAD SIGN STRUCTURES
GENERAL PLAN & ELEVATION
ALUMINUM TRUSS & STEEL SUPPORTS

F.A.I. 90/94 (DAN RYAN EXPRESSWAY)
GARFIELD BLVD TO 31ST STREET (NB LOCAL LANES)
PROPOSED IMPROVEMENT
GARFIELD BLVD TO 31ST STREET

P:\P40465\Civil\8-Chrs 18 & 19\Sht\Chr 19\Signing\SS180122A.dgn
08/08/2006 03:26:54 PM

ROUTE NO.	SECTION	COUNTY	TOTAL SHEETS	SHEET NO.
F.A.I. RTE. 90/94	*	COOK	565	256
FED. ROAD DIST. NO. 1		ILLINOIS	FED. AID PROJECT-	

* (1818, ETC, 2324,6-1P) R-10 62301

STATE OF ILLINOIS
DEPARTMENT OF TRANSPORTATION

TRUSS UNIT TABLE

Structure Number	Station	Design Truss Type	Exterior Units (2) No. Panels per Unit	Exterior Units (2) Unit Lgth.(L_e)	Exterior Units (2) Panel Lgth.(P)	Interior Unit No. Req'd.	Interior Unit No. Panels per Unit	Interior Unit Unit Lgth.(L_i)	Interior Unit Panel Lgth.(P)	Upper & Lower Chord O.D.	Upper & Lower Chord Wall	Verticals; Horizontals; Vertical, Horizontal, and Interior Diagonals O.D.	Verticals; Horizontals; Vertical, Horizontal, and Interior Diagonals Wall	Camber at Midspan	Splicing Flange Bolts No./Splice	Splicing Flange Bolts Dia.	Splicing Flange Weld Sizes W	Splicing Flange Weld Sizes W_1	Splicing Flange A	Splicing Flange B
IS0161094L057.3	4498+00.00	I-A	7	33'-4½"	4'-6"	0	--	--	--	5"	¼"	2½"	¼"	1.50"	6	⅞"	5/16"	¼"	8¾"	11¾"
IS0161094L057.1	4506+75.00	I-A	7	34'-10"	4'-8½"	0	--	--	--	5"	¼"	2½"	¼"	1.65"	6	⅞"	5/16"	¼"	8¾"	11¾"
IS0161094L056.9	4518+40.00	II-A	6	33'-4½"	5'-3"	1	6	32'-9"	5'-3"	6"	5/16"	3"	5/16"	3.00"	6	⅞"	⅜"	¼"	10¼"	13¾"
IS0161094L056.60	4535+80.00	II-A	7	37'-9"	5'-1½"	--	--	--	--	5½"	5/16"	3"	5/16"	1.70"	6	⅞"	⅜"	¼"	9¼"	12¼"
IS0161094L056.43	4545+35.00	I-A	7	34'-3"	4'-7½"	--	--	--	--	5	¼"	2½"	¼"	1.60"	6	⅞"	5/16"	¼"	8¾"	11¾"
IS0161094L055.94	4571+00.00	I-A	8	39'-10½"	4'-9"	--	--	-	--	5	5/16"	2½"	5/16"	2.15"	6	⅞"	5/16"	¼"	8¾"	11¾"
IS0161094L055.41	4599+00.00	III-A	7	35'-8½"	4'-10"	--	--	--	--	7	5/16"	3¼"	5/16"	1.75"	6	1"	7/16"	5/16"	11½"	15"

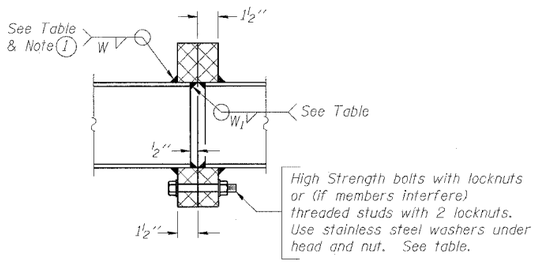

SECTION B-B

(1) Splicing Flanges shall be attached to each truss unit with the truss shop assembled to camber shown. Truss units shall be in proper alignment and flange surfaces shall be shop bolted into full contact before welding. Sufficient external welds or tacks shall be made to secure flanges until remaining welds are made after disassembly. Adjacent flanges shall be "match marked" to insure proper field assembly.

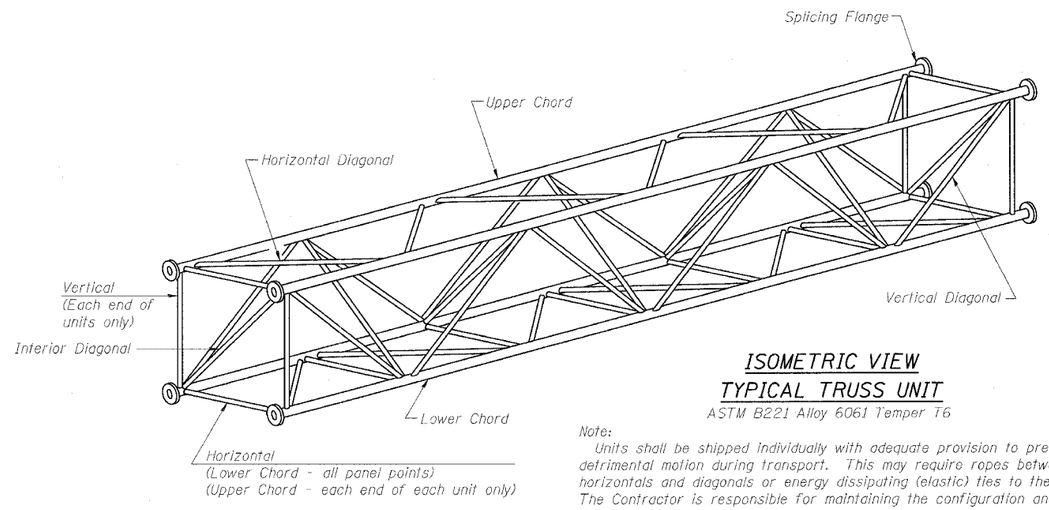

ISOMETRIC VIEW
TYPICAL TRUSS UNIT
ASTM B221 Alloy 6061 Temper T6

Note:
Units shall be shipped individually with adequate provision to prevent detrimental motion during transport. This may require ropes between horizontals and diagonals or energy dissipating (elastic) ties to the vehicle. The Contractor is responsible for maintaining the configuration and protection of the units.

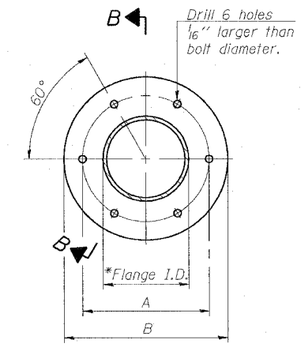

TRUSS TYPES I-A, II-A, & III-A

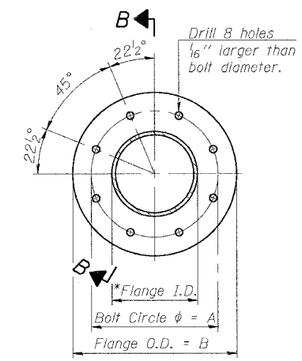

TRUSS TYPES II-A & III-A

SPLICING FLANGES
ASTM B221, Alloy 6061-T6
or ASTM B209, Alloy 6061-T651
*To fit O.D. of Chord with maximum gap of 1/16".

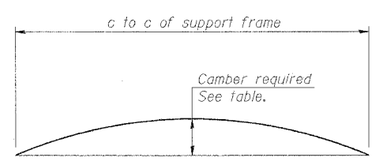

CAMBER DIAGRAM
Camber curve shown is theoretical. Actual camber attained by slope changes at splices between units.

CAMBER ATTAINMENT EXAMPLES:

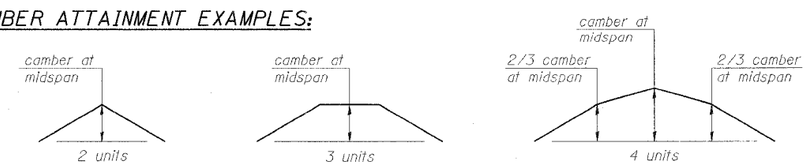

Camber shown is for fabrication only, measured with truss fully supported. (No-load condition)

NUMBER	REVISION	DATE
1	Dimensions	7/21
2	MSA/AS	8/7/06

DESIGNED	-	JSS
CHECKED	-	RDP
DRAWN	-	JSS
CHECKED	-	RDP

- 20
EXAMINED
ENGINEER OF STRUCTURAL SERVICES
PASSED
ENGINEER OF BRIDGES AND STRUCTURES

OS4-A-2 1-7-05

SGN-14

OVERHEAD SIGN STRUCTURES
ALUMINUM TRUSS DETAILS
FOR TRUSS TYPES I-A, II-A and III-A

F.A.I. 90/94 (DAN RYAN EXPRESSWAY)
GARFIELD BLVD TO 31ST STREET (NB LOCAL LANES)
PROPOSED IMPROVEMENT
GARFIELD BLVD TO 31ST STREET

08/08/2006 02:45:01 PM

P:\Acad\Civil\8-Chrs 18 & 19\SH\Chr 18\Signing\SS0801A2.dgn

STATE OF ILLINOIS
DEPARTMENT OF TRANSPORTATION

ROUTE NO.	SECTION	COUNTY	TOTAL SHEETS	SHEET NO.
F.A.I. RTE. 90/94	*	COOK	565	260
FED. ROAD DIST. NO. 1		ILLINOIS	FED. AID PROJECT -	

* (1818, ETC. 2324.6-1P) R-10 62301

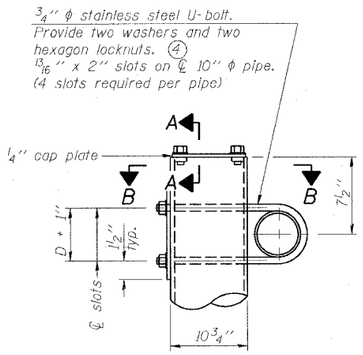

DETAIL A

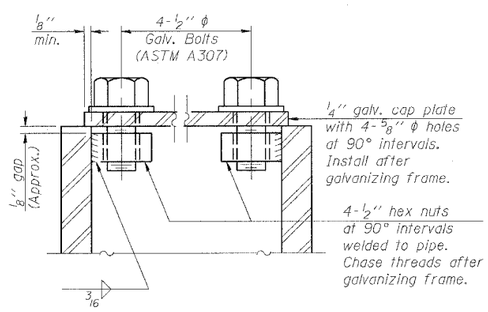

SECTION A-A

As an alternate to bolts, may use galvanized drive-fit caps installed after galvanizing frame.

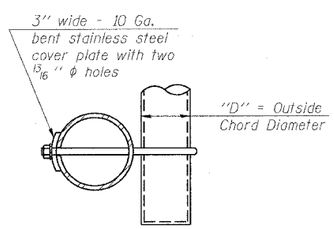

SECTION B-B

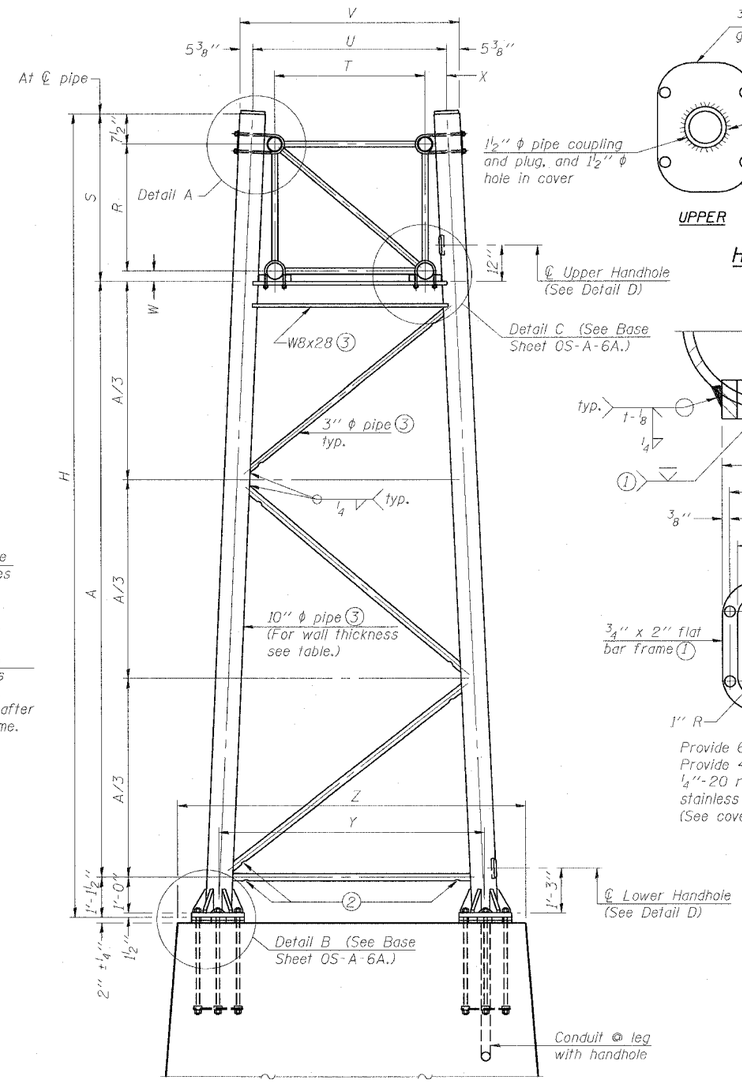

For Foundation Details, see base sheet OS-F3 (Spread Footing) or OS4-F3 (Drilled Shaft).

SIDE ELEVATION

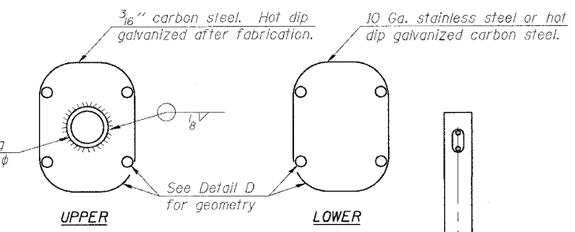

HANDHOLE COVERS

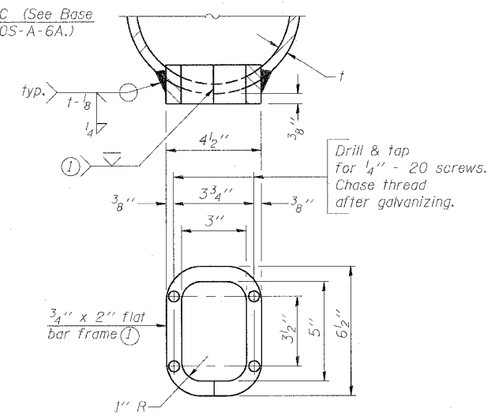

Provide 6 1/2" x 4 1/2" cover. Provide 4-5/16" ϕ holes in cover for 1/4"-20 round head hot dip galvanized or stainless steel machine screws. (See cover details)

DETAIL D

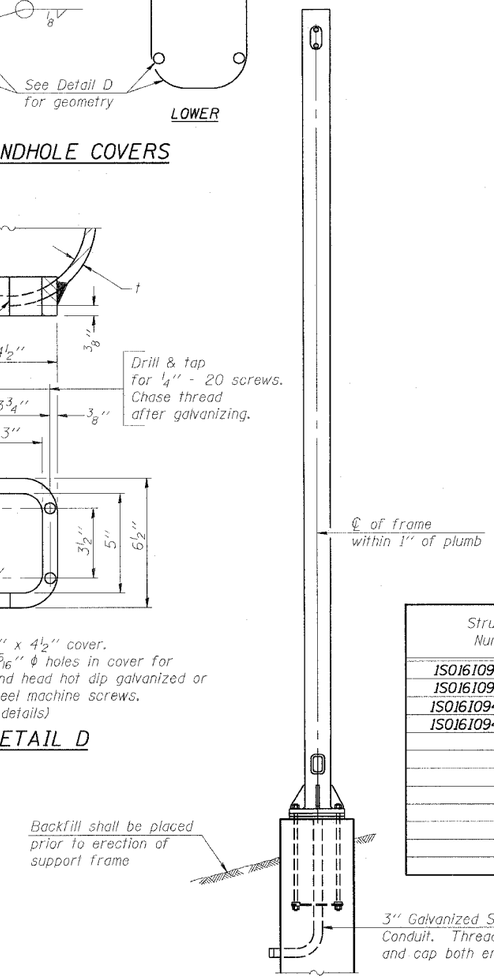

END ELEVATION

Support Design Loads: See Base Sheet OS-A-1 for design and loading criteria.

Load combinations checked include deadload plus:
a) 100% wind normal to sign, 20% parallel to sign
b) 60% wind normal to sign, 30% parallel to sign

(1) In lieu of fabricated handhole frame as shown, may cut from 2" plate (rolling direction vertical). All cut faces to be ground to ANSI Roughness of 500 µin or less.

(2) Galvanizing vent holes of adequate size shall be provided on underside at each end of bracing pipes. Alternately, holes may be provided in wall of pipe column. All vent holes shall be drilled and de-burred, typ.

(3) Steel pipe, plate, carbon steel handhole covers and rolled sections shall be hot dip galvanized after fabrication. Painting is not permitted. See Base Sheet OS-A-1.

(4) See General Notes for fasteners.

(5) Dimensions shown are based on selection criteria in the Sign Structures Manual. Nonstandard applications must have dimensions verified or amended as appropriate.

2

Structure Number	Station	Support Left	Support Right	Truss Type	Pipe Wall Thickness	H	A
IS0161094L056.9	4518+40.00	X		II-A	0.365 (Std)	23.15'	15.76'
IS0161094L056.9	4518+40.00		X	II-A	0.365 (Std)	22.12'	14.73'
IS0161094L056.60	4535+80.00	X		II-A	0.365 (Std)	27'-3 1/4"	19'-10 1/2"
IS0161094L056.60	4535+80.00		X	II-A	0.365 (Std)	25'-9 3/4"	18'-5"

SGN-18

10" ϕ PIPE TRUSS SUPPORT FRAME

Truss Type	Dimensions R	S	T	U	V	W	X	Y	Z
I-A	4'-6"	5'-5 1/2"	4'-0"	5'-6"	6'-4 3/4"	4"	9"	8'-3"	11'-3"
II-A (5)	5'-3"	6'-3 1/4"	4'-6"	6'-1"	6'-11 3/4"	4 3/4"	9 1/2"	8'-3"	11'-3"

NUMBER	REVISION	DATE
2	MSA/AS	8/7/06

DESIGNED	-	JSS
CHECKED	-	RDP
DRAWN	-	JSS
CHECKED	-	RDP

- 20
EXAMINED
ENGINEER OF STRUCTURAL SERVICES
PASSED
ENGINEER OF BRIDGES AND STRUCTURES

OS-A-6 1-7-05

OVERHEAD SIGN STRUCTURES
SUPPORT FRAME for ALUMINUM TRUSS

F.A.I. 90/94 (DAN RYAN EXPRESSWAY)
GARFIELD BLVD TO 31ST STREET (NB LOCAL LANES)
PROPOSED IMPROVEMENT
GARFIELD BLVD TO 31ST STREET

F:\P-A0466\Chl\18-Chtrs 18 & 19\Sltr\Chtr 19\Signing\SS18018ZA.dgn
08/08/2006 02:46:50 PM

STATE OF ILLINOIS
DEPARTMENT OF TRANSPORTATION

ROUTE NO.	SECTION	COUNTY	TOTAL SHEETS	SHEET NO.
F.A.I. RTE. 90/94	*	COOK	565	262
FED. ROAD DIST. NO. 1		ILLINOIS	FED. AID PROJECT-	

* (1818, ETC, 2324.6-1P) R-10 62301

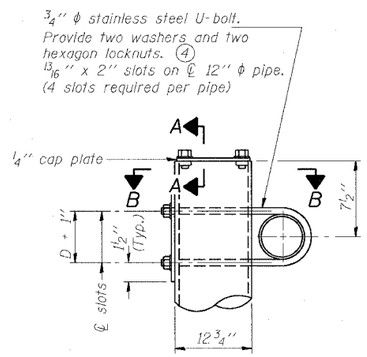

DETAIL A

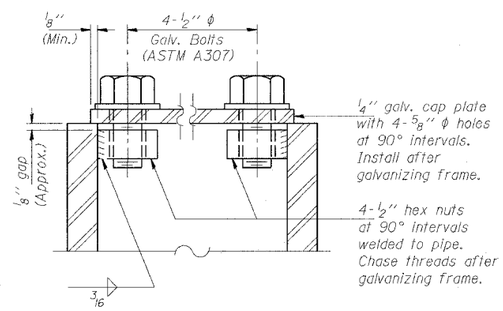

SECTION A-A

As an alternate to bolts, may use galvanized drive-fit caps installed after galvanizing frame.

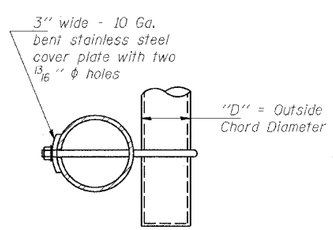

SECTION B-B

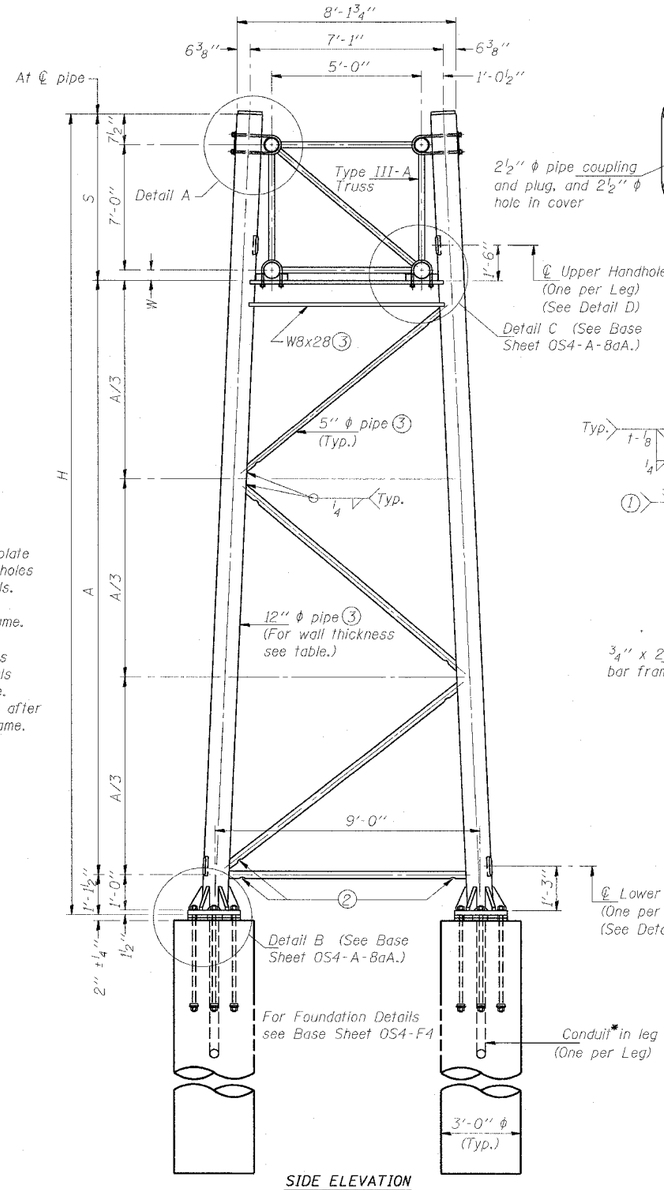

SIDE ELEVATION

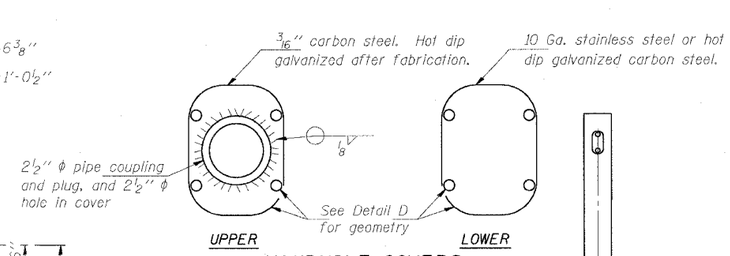

HANDHOLE COVERS

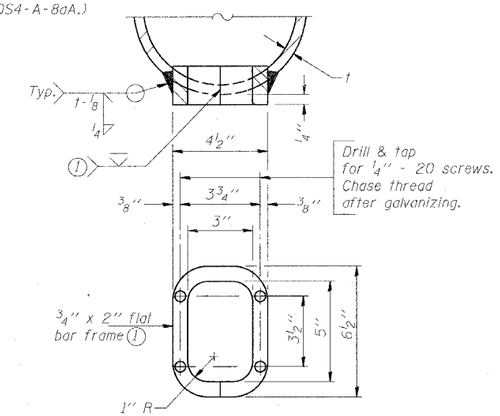

DETAIL D

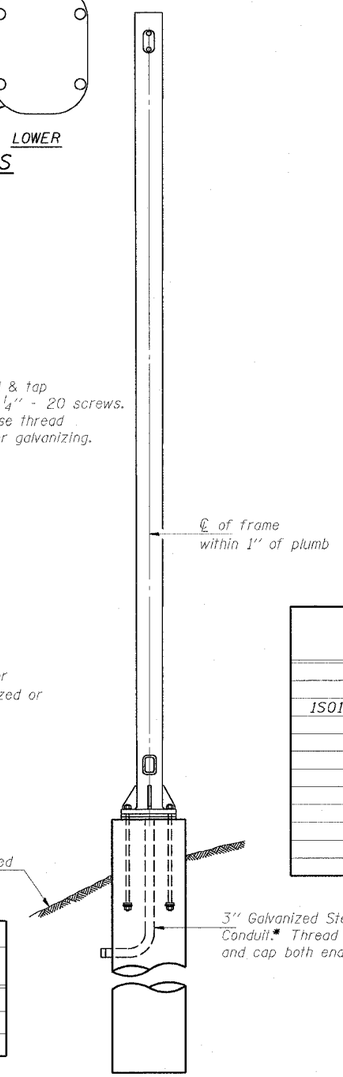

END ELEVATION

Dimensions		
Truss Chord Nominal Dia.	W	S
7"	4 3/4"	8'-0 1/4"
8 1/2"	5 1/2"	8'-1"
9"	5 3/4"	8'-1 1/4"

Support Design Loads: See Base Sheet OS-A-1 for design and loading criteria.
Load combinations checked include deadload plus:
a) 100% wind normal to sign, 20% parallel to sign
b) 60% wind normal to sign, 30% parallel to sign

(1) In lieu of fabricated handhole frame as shown, may cut from 2" plate (rolling direction vertical). All cut faces to be ground to ANSI Roughness of 500 μin or less.

(2) Galvanizing vent holes of adequate size shall be provided on underside at each end of bracing pipes. Alternately, holes may be provided in wall of pipe column. All vent holes shall be drilled and de-burred, typ.

(3) Steel pipe, plate, carbon steel handhole covers and rolled sections shall be hot dip galvanized after fabrication. Painting is not permitted. See Base Sheet OS-A-1.

(4) See General Notes for fasteners.

(5) Dimensions shown are based on selection criteria in the Sign Structures Manual. Nonstandard applications must have dimensions verified or amended as appropriate.

FOR LEFT SUPPORT DETAILS, SEE CONTRACT 62300

Structure Number	Station	Support Left	Support Right	Pipe Wall Thickness	H	A
1S0161094L055.41	4599+00	X		0.33	24'-5 5/16"	15'-3 1/4"
			X	0.33	23'-7 11/16"	14'-5 7/8"

SGN-20

OVERHEAD SIGN STRUCTURES
SUPPORT FRAME for TYPE III-A ALUMINUM TRUSS

F.A.I. 90/94 (DAN RYAN EXPRESSWAY)
GARFIELD BLVD TO 31ST STREET (NB LOCAL LANES)
PROPOSED IMPROVEMENT
GARFIELD BLVD TO 31ST STREET

TRUSS SUPPORT DETAILS
(12" ϕ Pipe-Type III-A Truss)

DESIGNED	AC
CHECKED	AS
DRAWN	RV
CHECKED	MSA

EXAMINED 20
ENGINEER OF STRUCTURAL SERVICES
PASSED
ENGINEER OF BRIDGES AND STRUCTURES

NUMBER	REVISION	DATE
2	MSA/AS	8/7/06

MODIFIED BY CTE ENGINEERS, INC FROM OS4-A-8a 1-7-05

* COORDINATE WITH CONTRACT 62583 FOR LOCATION, TYPE, AND ORIENTATION OF CONDUIT.

P:\P40466\CWNB-Chrs 18 & 19\Sh\Cntr 18\Signing\SS\86202A.dgn
08/08/2006 02:23:20 PM

STATE OF ILLINOIS
DEPARTMENT OF TRANSPORTATION

ROUTE NO.	SECTION	COUNTY	TOTAL SHEETS	SHEET NO.
F.A.I. RTE. 90/94	*	COOK	565	265
FED. ROAD DIST. NO. 1		ILLINOIS	FED. AID PROJECT-	

* (818, ETC, 2324.6-1P) R-10

62301

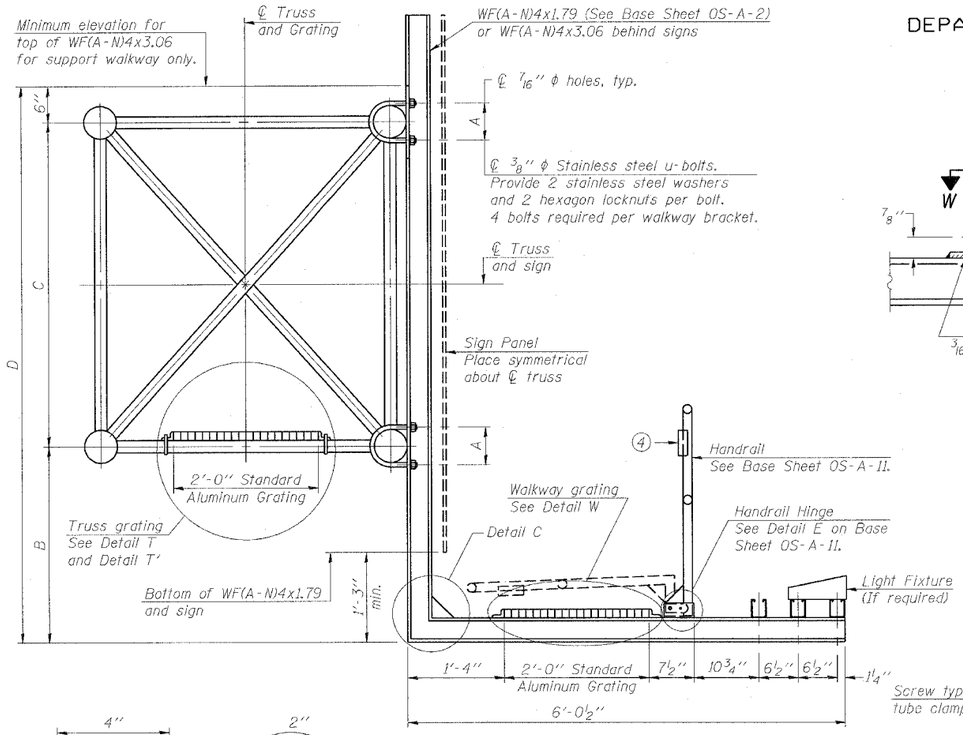

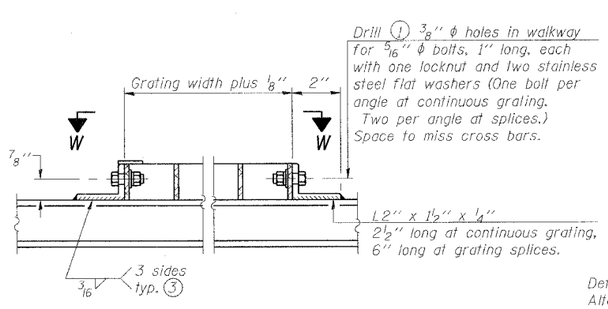

DETAIL W
(Walkway grating)

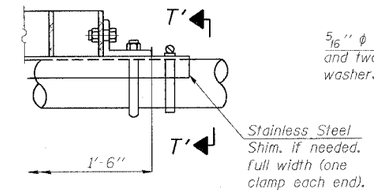

DETAIL T'
(Truss grating splice)
Details not shown same as Detail T.
Alternate materials may be used subject to the Engineer's review and approval.

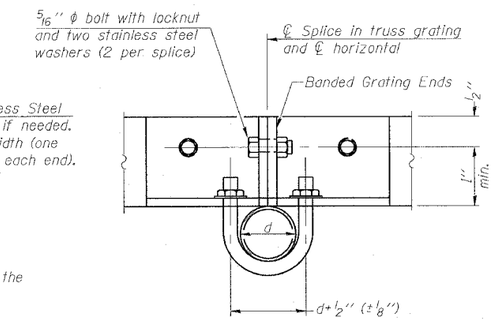

SECTION T'-T'

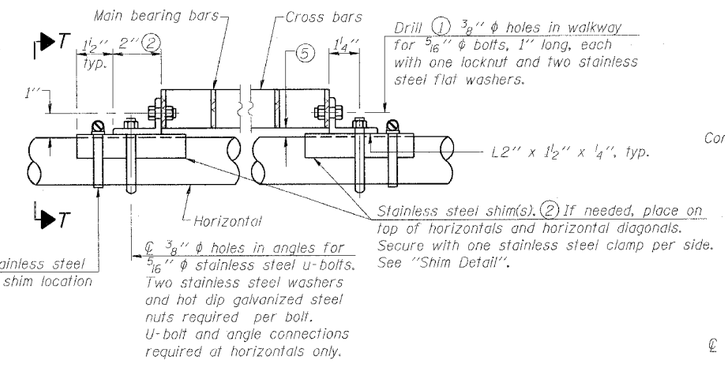

DETAIL T
(Continuous Truss grating)

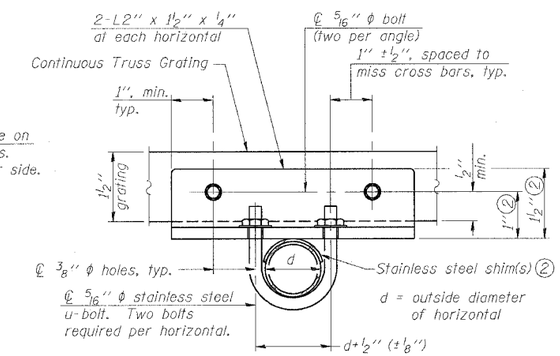

SECTION T-T

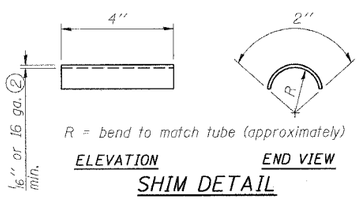

SHIM DETAIL

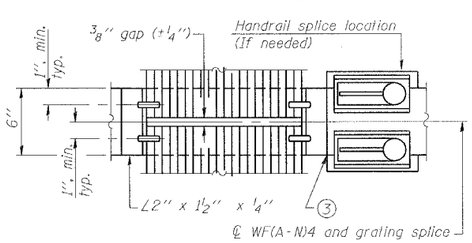

(AT WALKWAY GRATING SPLICE)

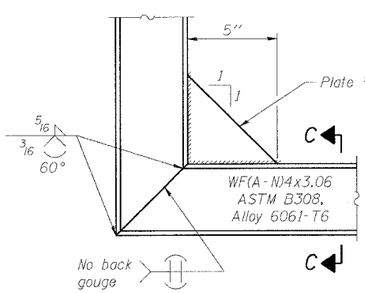

DETAIL C
(See Detail P, Base Sheet OS-A-11.)

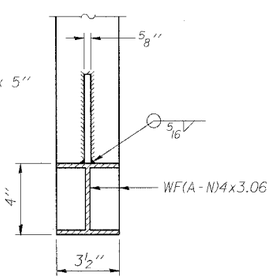

SECTION C-C

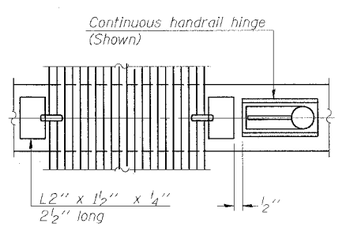

(CONTINUOUS WALKWAY GRATING)

SECTION W-W

SPECIFICATIONS FOR STANDARD ALUMINUM GRATING

Main Bearing Bars shall be 3/16" x 1½" on 1 3/16" centers and conform to ASTM B221 Alloy 6061-T6.

Cross bars shall be 3/16" x 1½" on 4" centers and conform to ASTM B221 Alloy 6063-T5 or 6061-T6.

OR

Aluminum Grating with modified "I" sections for main bearing bars shall meet the following requirements:

Main bars shall conform to ASTM B221 Alloy 6061-T6 and have a minimum section modulus equal to 0.0705 in.³ per bar, a depth of 1½", spaced on 1 3/16" centers.

Cross bars shall conform to ASTM B221 Alloy 6063-T5 or T-42 and spaced on 4" centers.

Structure Number	Station	A	B	C	D
1S0161094L057.3	4498+00	5½"	3'-0"	4'-6"	8'-0"
1S0161094L057.1	4506+75	5½"	5'-3"	4'-6"	10'-3"
1S0161094L056.9	4518+40	6½"	3'-0"	4'-6"	8'-0"
1S0161094L056.60	4535+80	6½"	4'-10 7/16"	5'-3"	10'-7 7/16"
1S0161094L056.43	4545+35	5½"	3'-3"	4'-6"	8'-3"
1S0161094L055.94	4571+00	5½"	3'-9"	4'-6"	8'-9"

2

(1) Drilling holes in grating may be done in shop or field, based on Contractor's preference and subject to accurate alignment.

(2) Stainless steel shims shall be placed as shown in Detail T if needed to compensate for alignment variations between horizontal and diagonal pipes beyond adjustment provided by angles. Thicker shims may be used subject to shims performing properly.

(3) If Handrail Joint present, weld angle to WF(A-N)4 and ¼" extension bars. (See Base Sheet OS-A-11.)

(4) ℄ ⅛" x ½" x 2" welded to handrail posts to protect locations that contact grating.

(5) Tube to grating gap may vary from 0 to ½", max. to align walkway, allow for camber, etc.

SGN-23

OVERHEAD SIGN STRUCTURES
ALUMINUM WALKWAY DETAILS

F.A.I. 90/94 (DAN RYAN EXPRESSWAY)
GARFIELD BLVD TO 31ST STREET (NB LOCAL LANES)
PROPOSED IMPROVEMENT
GARFIELD BLVD TO 31ST STREET

DESIGNED	-	JSS
CHECKED	-	RDP
DRAWN	-	JSS
CHECKED	-	RDP

- 20
EXAMINED
ENGINEER OF STRUCTURAL SERVICES
PASSED
ENGINEER OF BRIDGES AND STRUCTURES

NUMBER	REVISION	DATE
2	MSA/AS	8/7/06

OS-A-10 1-7-05

08/08/2006 02:49:27 PM

PW:P:\0486RC\NB-Contrs 18 & 19\SHCar 19\Signing\SS1802E32.dgn

STATE OF ILLINOIS
DEPARTMENT OF TRANSPORTATION

ROUTE NO.	SECTION	COUNTY	TOTAL SHEETS	SHEET NO.
90/94	*	COOK	565	267
FED. ROAD DIST. NO. 1	ILLINOIS	FED. AID PROJECT-		

* 62301 (2021-922 PT2 ECT 2324.6-1P) R-10

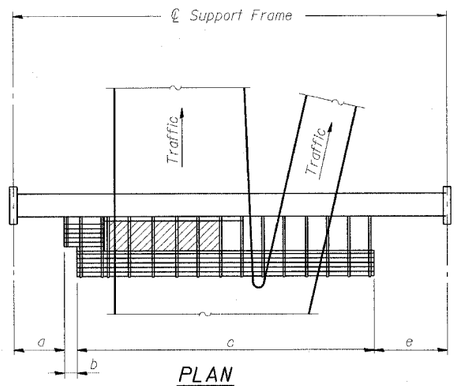

PLAN

WALKWAY AND HANDRAIL SKETCH

(Road plan beneath truss varies)

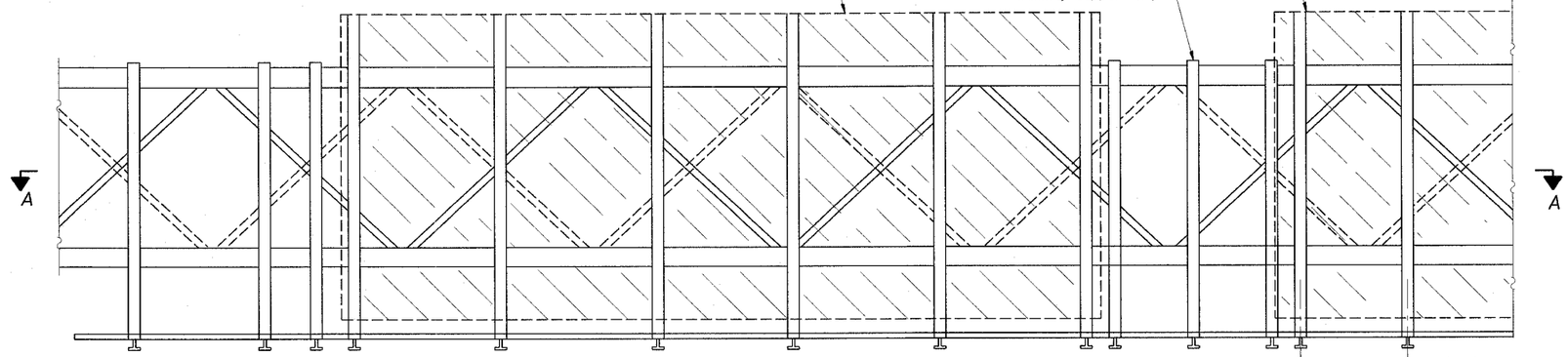

TYPICAL FRONT ELEVATION

With handrail omitted for clarity.
For Section B-B, see Base Sheet OS-A-10-DMS2
For Section B'-B', and B''-B'', see Base Sheet
For Section B -B , and B -B , see Base Sheet OS-A-10a-DMS2

Bracket and grating dimensions are nominal and will vary based on actual DMS cabinet dimensions plus manufacturer's mounting devices, lowered handrail and DMS cabinet.

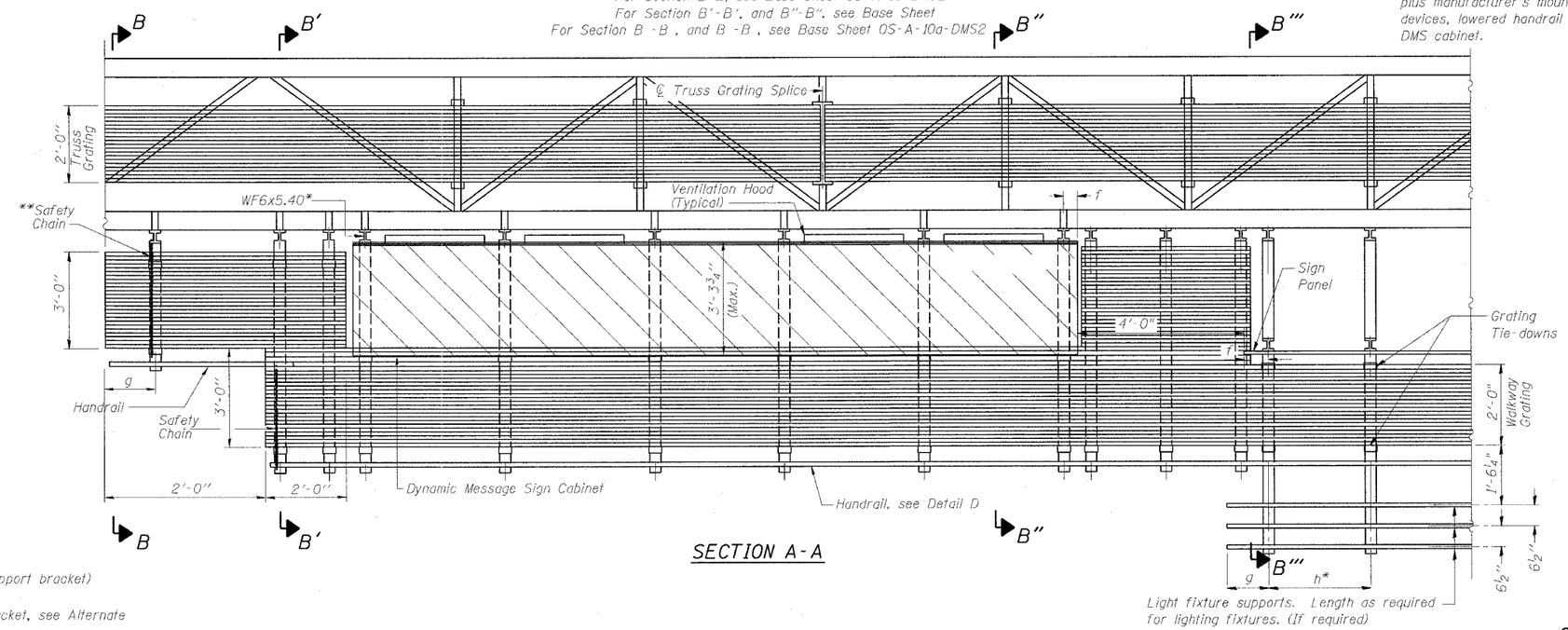

SECTION A-A

Walkway and Truss Grating width dimensions are nominal and may vary ±½" based on available standard widths.

BRACKET TABLE

WF6x5.40 ASTM B308, Alloy 6061-T6	
Sign Width	Number Brackets Required
26'-1"	6
12'-0"	6

Notes: *Space WF6x5.40 brackets for efficiency and within limits shown:

f = 12" maximum, 4" minimum (End of sign to ℄ of nearest bracket)
g = 12" maximum, 4" minimum (End of walkway grating to ℄ of nearest support bracket)
h = 6'-0" maximum (℄ to ℄ or walkway support brackets, WF6x5.40)

**If walkway bracket at safety chain location is behind sign, add angle to bracket, see Alternate Safety Chain Attachment on Base Sheet OS-A-11-DMS2

For Details T and W, Section B-B and Grating Splice Details, see Base Sheet OS-A-10-DMS2.
For Details D, F, G and P and Handrail Splice Details, see Base Sheet OS-A-11-DMS2.

Handrail and walkway shall span a minimum of three brackets between splices and/or gap joints.
Place all sign and walkway brackets as close to panel points as practical.
Grating and handrail splices placed as needed.

Truss grating to facilitate inspection shall run full length (center to center of support frames) ±12" on overhead trusses. Cost of truss grating is included in "Overhead Sign Structure"

SGN-25

OVERHEAD SIGN STRUCTURES
ALTERNATE ALUMINUM WALKWAY DETAILS
FOR DMS

ILLINOIS DEPARTMENT OF TRANSPORTATION
F.A.I. 90/94 (DAN RYAN EXPRESSWAY)
63RD STREET TO GARFIELD BLVD (NB LOCAL LANES)

OVERHEAD SIGN STRUCTURES
(SPAN)

DESIGNED -	AC
CHECKED -	AS
DRAWN -	RV
CHECKED -	MSA

- 20
EXAMINED
ENGINEER OF STRUCTURAL SERVICES
PASSED
ENGINEER OF BRIDGES AND STRUCTURES

NUMBER	REVISION	DATE
2	MSA/AS	8/7/06

Structure Number	Station	a	b	c	d	e	Walkway Grating and Handrail Lengths
IS0161094L055.41	4599+00	3'-10"	2'-0"	45'-6"	0	22'-1"	47'-6"

MODIFIED BY CTE ENGINEERS, INC FROM OS-A-9-DMS2 7/1/2001 2

P:\P40466\Civil\16-Contr 18 & 19\Sht\Ctr 18\Signing\S-SI80252A.dgn
08/08/2006 04:35 PM

STATE OF ILLINOIS
DEPARTMENT OF TRANSPORTATION

ROUTE NO.		COUNTY	TOTAL SHEETS	SHEET NO.
94/90	*	COOK	565	268
FED. ROAD DIST. NO. 1	ILLINOIS	FED. AID PROJECT-		

* 62301 (2021-922 PT2 ETC 2324.6-1P) R-10

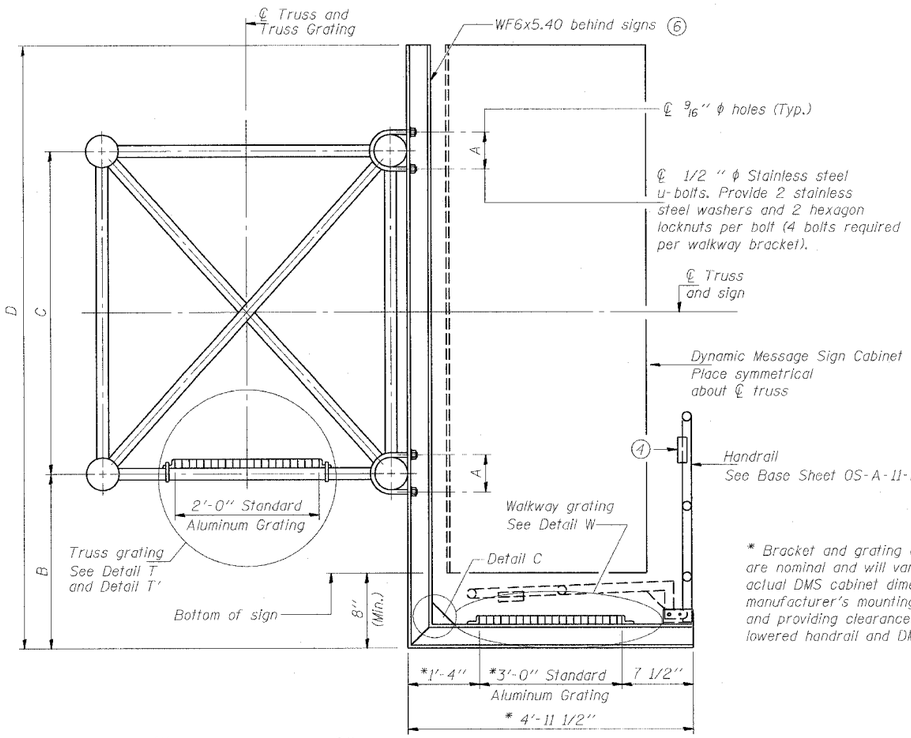

SECTION B-B

* Bracket and grating dimensions are nominal and will vary based on actual DMS cabinet dimensions plus manufacturer's mounting devices, and providing clearance between the lowered handrail and DMS cabinet.

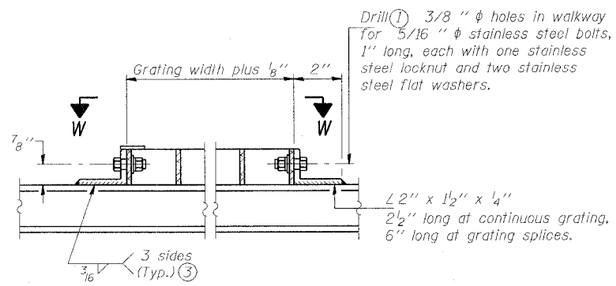

DETAIL W
(Walkway grating)

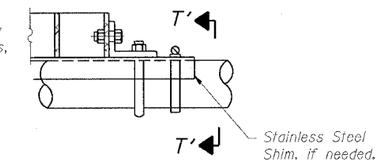

DETAIL T'
(Truss grating splice)
Details not shown same as Detail T.
Alternate materials may be used subject to the Engineer's review and approval.

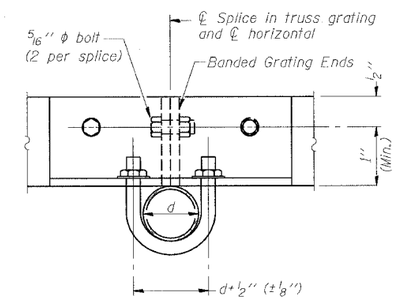

SECTION T'-T'

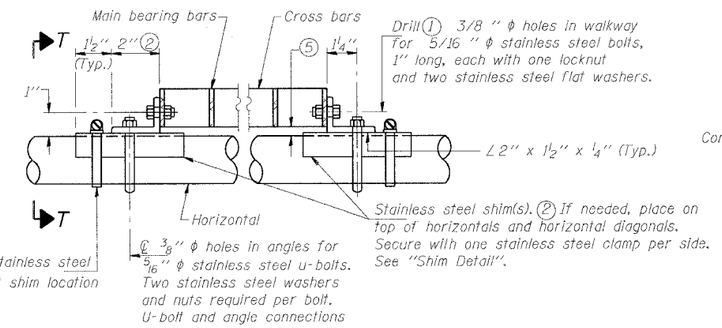

DETAIL T
(Continuous Truss grating)

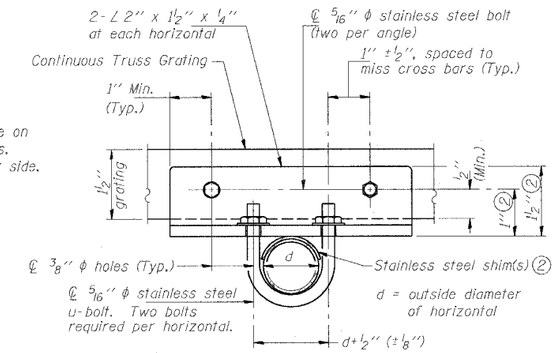

SECTION T-T

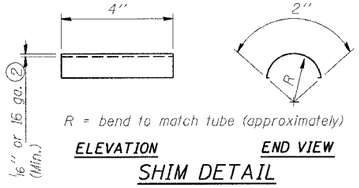

SHIM DETAIL

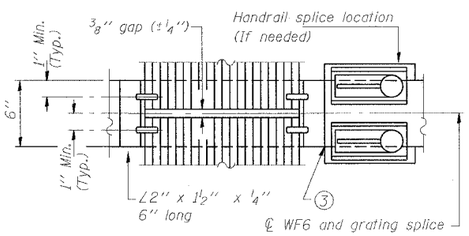

(AT WALKWAY GRATING SPLICE)

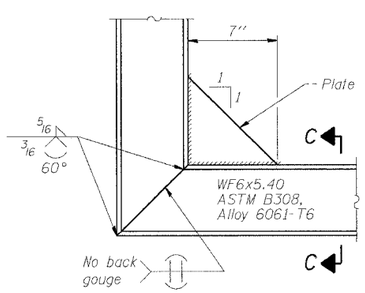

DETAIL C

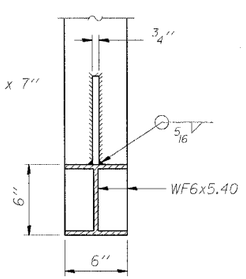

SECTION C-C

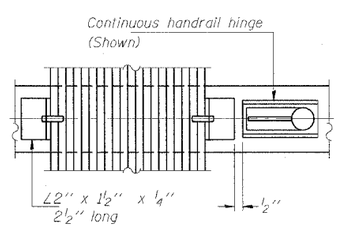

(CONTINUOUS WALKWAY GRATING)

SECTION W-W

SPECIFICATIONS FOR STANDARD ALUMINUM GRATING

Main Bearing Bars shall be 3/16" x 1 1/2" on 1 3/16" centers and conform to ASTM B211 Alloy 6061-T6.
Cross bars shall be 3/16" x 1 1/2" on 4" centers and conform to ASTM B221 Alloy 6063-T5 or 6061-T6.

OR

Aluminum Grating with modified "T" sections for main bearing bars shall meet the following requirements:
Main bars shall conform to ASTM B221 Alloy 6061-T6 and have a minimum section modulus equal to 0.0705 in.³ per bar, a depth of 1 1/2", spaced on 1 3/16" centers.
Cross bars shall conform to ASTM B221 Alloy 6063-T5 or T-42 and spaced on 4" centers.

Structure Number	Station	A	B	C	D
IS0161094L055.41	4599+00	7 1/2"	1'-5"	7'-0"	9'-2"

(1) Drilling holes in grating may be done in shop or field, based on Contractor's preference and subject to accurate alignment.
(2) Stainless steel shims shall be placed as shown in Detail T if needed to compensate for alignment variations between horizontal and diagonal pipes beyond adjustment provided by angles. Thicker shims may be used subject to shims performing properly.
(3) If Handrail Joint present, weld angle to WF6 and 1/4" extension bars. (See Base Sheet OS-A-11-DMS2.)
(4) PL 1/8" x 1/2" x 2" welded to handrail posts to protect locations that contact grating.
(5) Tube to grating gap may very from 0 to 1/2" max. to align walkway, allow for camber, etc.
(6) Cabinet manufacturer must design and supply hardware for connection of cabinet to WF6's. Bolts must be stainless steel or hot dip galvanized high strength per IDOT specifications.

SGN-26

OVERHEAD SIGN STRUCTURES
ALTERNATE ALUMINUM WALKWAY DETAILS
FOR DMS

ILLINOIS DEPARTMENT OF TRANSPORTATION
F.A.I. 94/90 (DAN RYAN EXPRESSWAY)
GARFIELD BLVD TO 31ST STREET (NB LOCAL LANES)
OVERHEAD SIGN STRUCTURES
(SPAN)

DESIGNED	AC
CHECKED	AS
DRAWN	RV
CHECKED	MSA

EXAMINED 19
ENGINEER OF STRUCTURAL SERVICES
PASSED
ENGINEER OF BRIDGES AND STRUCTURES

NUMBER	REVISION	DATE
2	MSA/AS	8/7/06

OS-A-10-DMS2 1/7/2005

PW:P40468\Civil\8-Entra 18 & 19\SHT\Cntr 18\Signing\S-SR0268.dgn
08/08/2006 02:27:12 PM

STATE OF ILLINOIS
DEPARTMENT OF TRANSPORTATION

ROUTE NO.		COUNTY	TOTAL SHEETS	SHEET NO.
94/90	*	COOK	565	269
FED. ROAD DIST. NO. 1	ILLINOIS	FED. AID PROJECT-		

* 62301 (2021-922 PT2 ETC 2324.6-IP) R-10

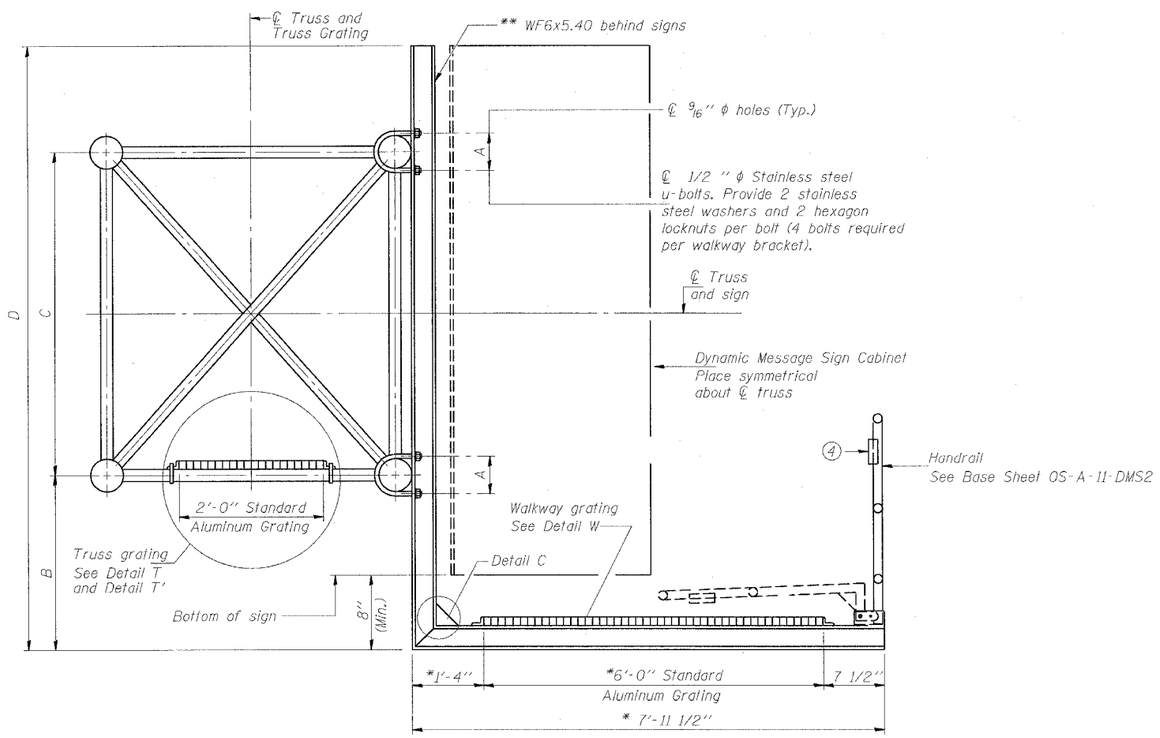

SECTION B'-B'

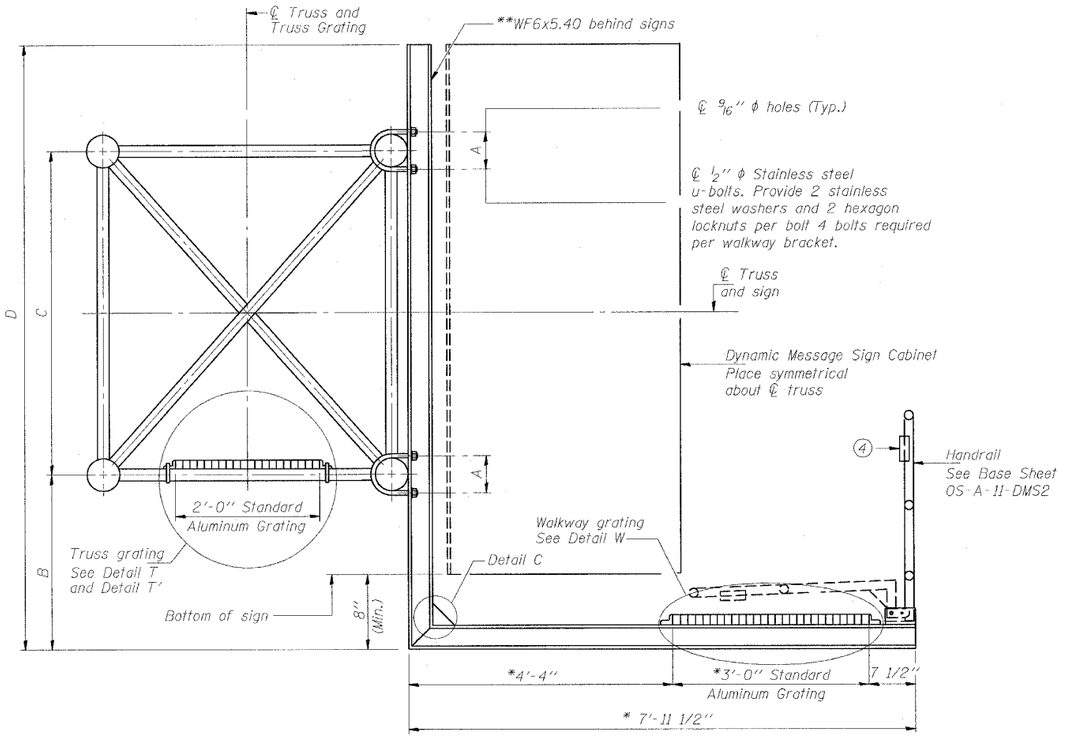

SECTION B''-B''

* Bracket and grating dimensions are nominal and will vary based on actual DMS cabinet dimensions plus manufacturer's mounting devices, and providing clearance between the lowered handrail and DMS cabinet.

** Cabinet manufacturer must design and supply hardware for connection of cabinet to WF6's. Bolts must be stainless steel or hot dip galvanized high strength per IDOT specifications.

Note:

For dimentions "A" to "D" and remaining details. see sheet OS-A-10-DMS2

SGN-27

OVERHEAD SIGN STRUCTURES
ALTERNATE ALUMINUM WALKWAY DETAILS

ILLINOIS DEPARTMENT OF TRANSPORTATION
F.A.I. 94/90 (DAN RYAN EXPRESSWAY)
GARFIELD BLVD TO 31ST STREET (NB LOCAL LANES)

OVERHEAD SIGN STRUCTURES
(SPAN)

NUMBER	REVISION	DATE
2	MSA/AS	8/7/06

DESIGNED	AC
CHECKED	AS
DRAWN	RV
CHECKED	MSA

19
EXAMINED
ENGINEER OF STRUCTURAL SERVICES
PASSED
ENGINEER OF BRIDGES AND STRUCTURES

OS-A-10a-DMS2 1/7/2005

FY04046 Civil Cairs 18 & 19 SHOP Designs\SA06-01.dgn
08/08/2006 12:46:01 PM

STATE OF ILLINOIS
DEPARTMENT OF TRANSPORTATION

ROUTE NO.		COUNTY	TOTAL SHEETS	SHEET NO.
94/90	*	COOK	565	269A
FED. ROAD DIST. NO. 1	ILLINOIS	FED. AID PROJECT-		

* 62301 (2021-922 PT2 ETC 2324.6-1P) R-10

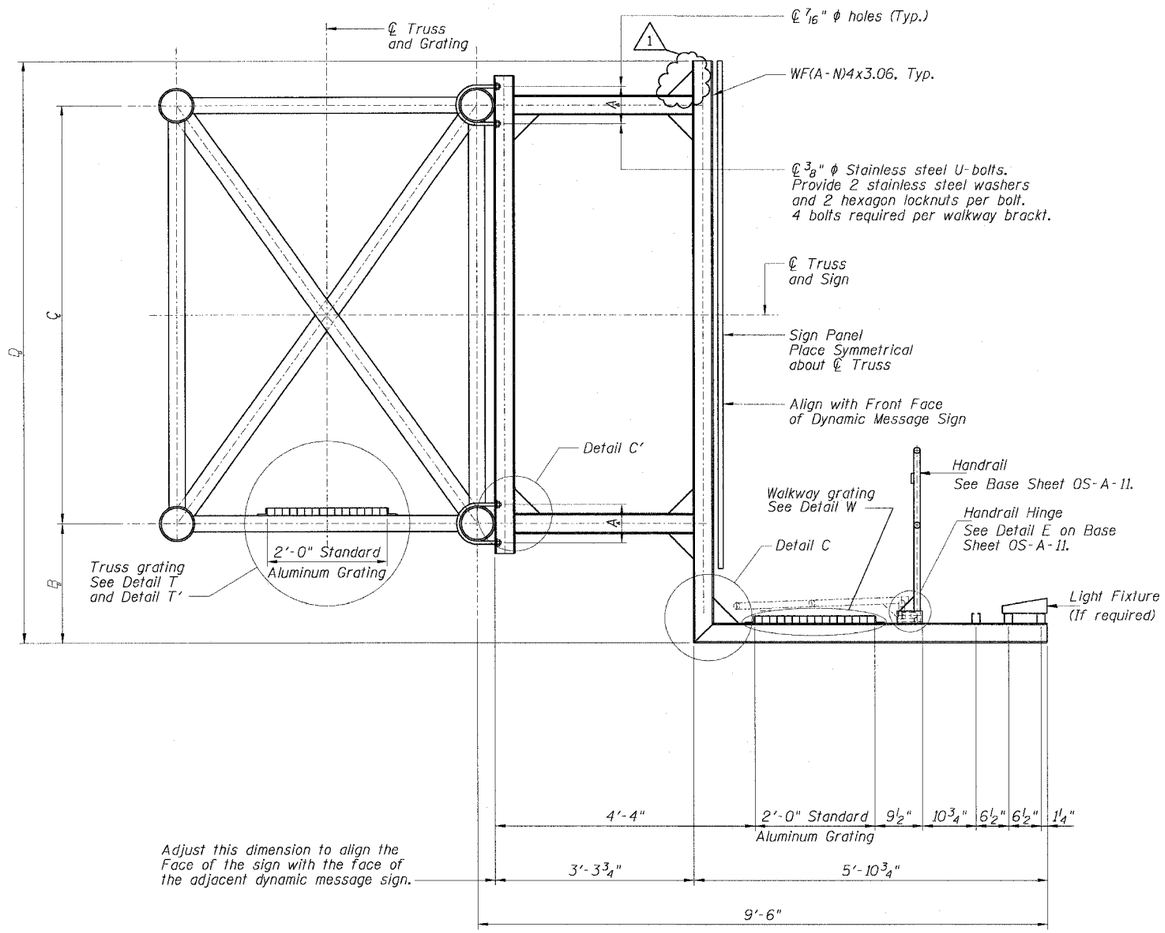

SECTION B'''-B'''

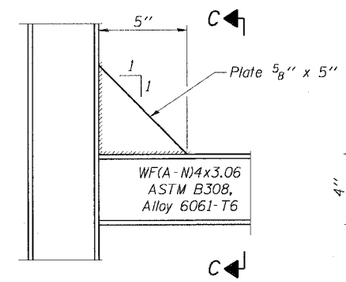

DETAIL C'

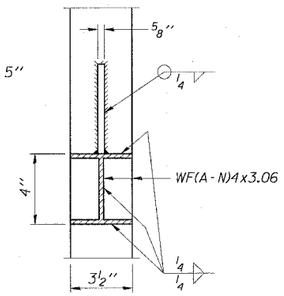

SECTION C-C

SGN-27A

OVERHEAD SIGN STRUCTURES
ALTERNATE ALUMINUM WALKWAY DETAILS
FOR DMS

DESIGNED -	JAS
CHECKED -	RADP
DRAWN -	JBS
CHECKED -	RADP

- 20
EXAMINED
ENGINEER OF STRUCTURAL SERVICES
PASSED
ENGINEER OF BRIDGES AND STRUCTURES

REVISIONS

NAME	DATE
ADDENDUM 2	8/7/06

2

ILLINOIS DEPARTMENT OF TRANSPORTATION
F.A.I. 90/94 (DAN RYAN EXPRESSWAY)
GARFIELD BLVD TO 31ST STREET (NB LOCAL LANES)
PROPOSED IMPROVEMENT
GARFIELD BLVD TO 31ST STREET

MODIFIED BY CTE ENGINEERS, INC FROM OS-A-9-DMS2

2

P:\Y-Admin\Civil\18-Cntrs 18 & 19\Sh\Cntr 18\Signing\S316027A2A.sht
08/08/2006 01:22:02 PM

STATE OF ILLINOIS
DEPARTMENT OF TRANSPORTATION

ROUTE NO.	SECTION	COUNTY	TOTAL SHEETS	SHEET NO.
90/94	*	COOK	565	270
FED. ROAD DIST. NO. 1	ILLINOIS	FED. AID PROJECT-		

62301 (2021-922 PT2 ETC 2324.6-1P) R-10

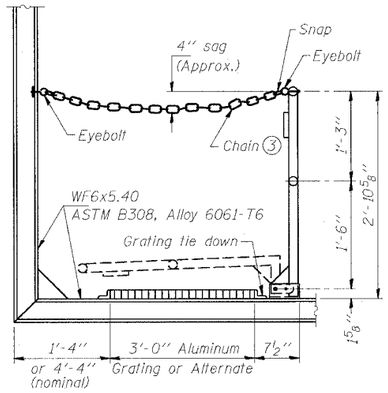

SIDE ELEVATION

(Showing safety chain w/o sign)

HANDRAIL DETAILS

Handrail pipe shall be ASTM B241, Alloy 6063-T6 or Alloy 6061-T6.

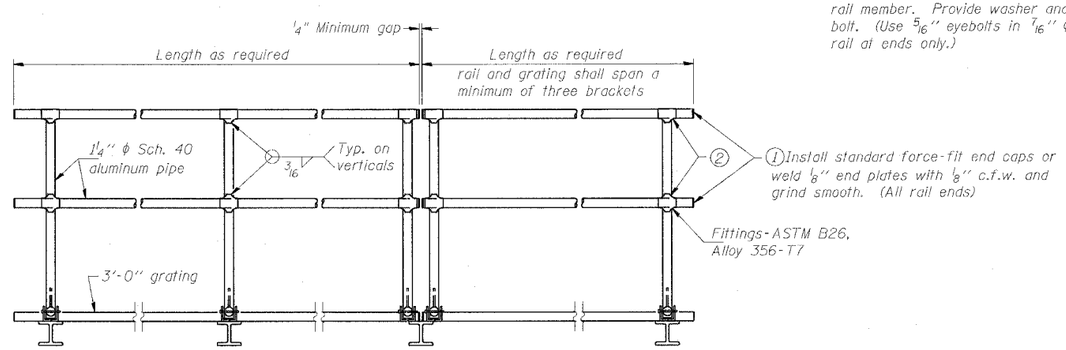

FRONT ELEVATION

(2) Horizontal handrail member shall be continuous thru fitting. Provide 7/16" ϕ hole in fitting for 3/8" ϕ bolt. Field drill 1/16" ϕ hole in horizontal rail member. Provide washer and locknut for bolt. (Use 5/16" eyebolts in 7/16" ϕ holes on top rail at ends only.)

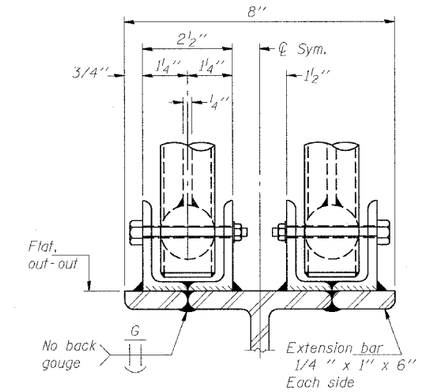

ELEVATION AT HANDRAIL JOINT (4)

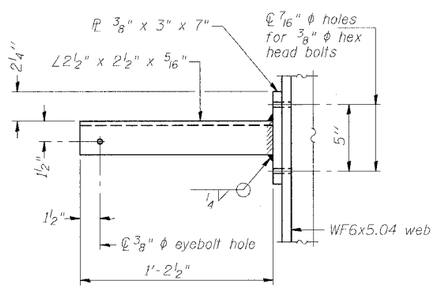

SECTION P-P

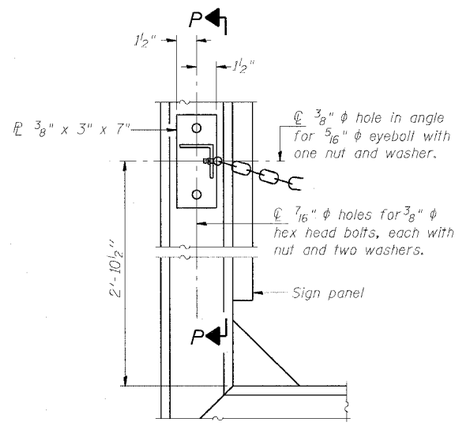

ALTERNATE SAFETY CHAIN ATTACHMENT

(With Sign Present)

Items not shown same as "Side Elevation" of "Handrail Details"

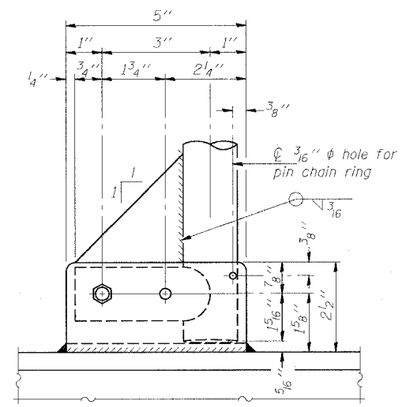

SIDE ELEVATION

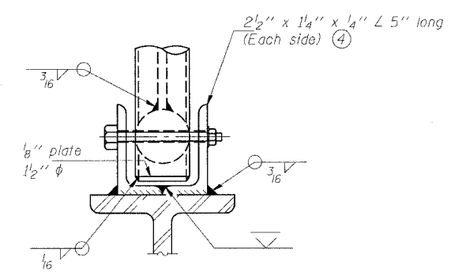

FRONT ELEVATION

See "ELEVATION" at right for dimensions.

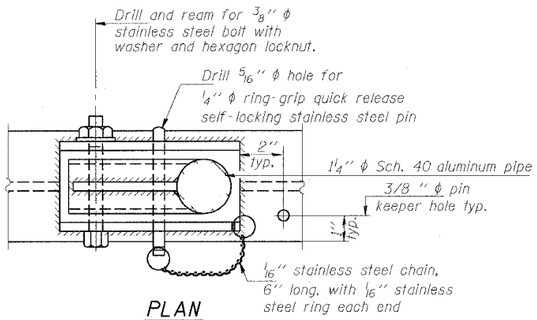

PLAN

DETAIL E HANDRAIL HINGE

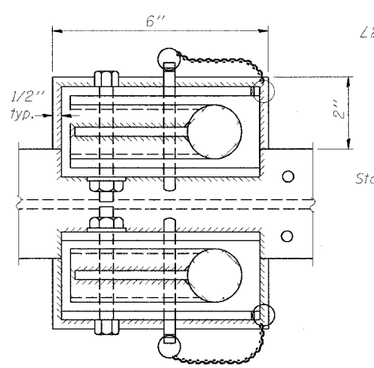

PLAN AT HANDRAIL JOINT

Details not shown same as "PLAN"

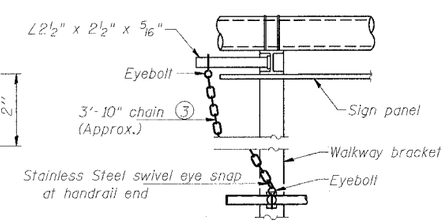

ALTERNATE SAFETY CHAIN ATTACHMENT

Details not shown similar to "Safety Chain" Details
(Walkway omitted for clarity)

(3) 3/16" type 304L stainless steel chain, approximately 12 links per foot.

(4) Extrusions may be used in lieu of the details shown, with approval of the Engineer.

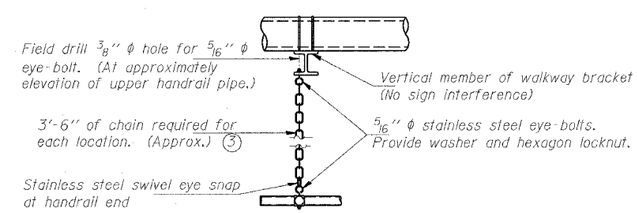

SAFETY CHAIN

One required for each end of each walkway.

SGN-28

OVERHEAD SIGN STRUCTURES
ALTERNATE ALUMINUM HANDRAIL DETAILS

ILLINOIS DEPARTMENT OF TRANSPORTATION
F.A.I. 94/90 (DAN RYAN EXPRESSWAY)
GARFIELD BLVD TO 31ST STREET (NB LOCAL LANES)
OVERHEAD SIGN STRUCTURES
(SPAN)

DESIGNED	AC
CHECKED	AS
DRAWN	RV
CHECKED	MSA

19
EXAMINED
ENGINEER OF BRIDGE DESIGN
PASSED
ENGINEER OF BRIDGES AND STRUCTURES

NUMBER	REVISION	DATE
2	MSA/AS	8/7/06

OS-A-11-DMS2 1/7/2005

ROUTE NO.	SECTION	COUNTY	TOTAL SHEETS	SHEET NO.
94/90	*	COOK	565	273
FED. ROAD DIST. NO. 7	ILLINOIS	FED. AID PROJECT -		

SHEET NO. - - SHEETS

* 62301 (2021-922 PT2 ETC 2324.6-1P) R-10

For anchor rod size and placement, see Support Frame Detail Sheet.

*Anchor rod shall be ground or filed to bright metal at clamp and cable connection location.

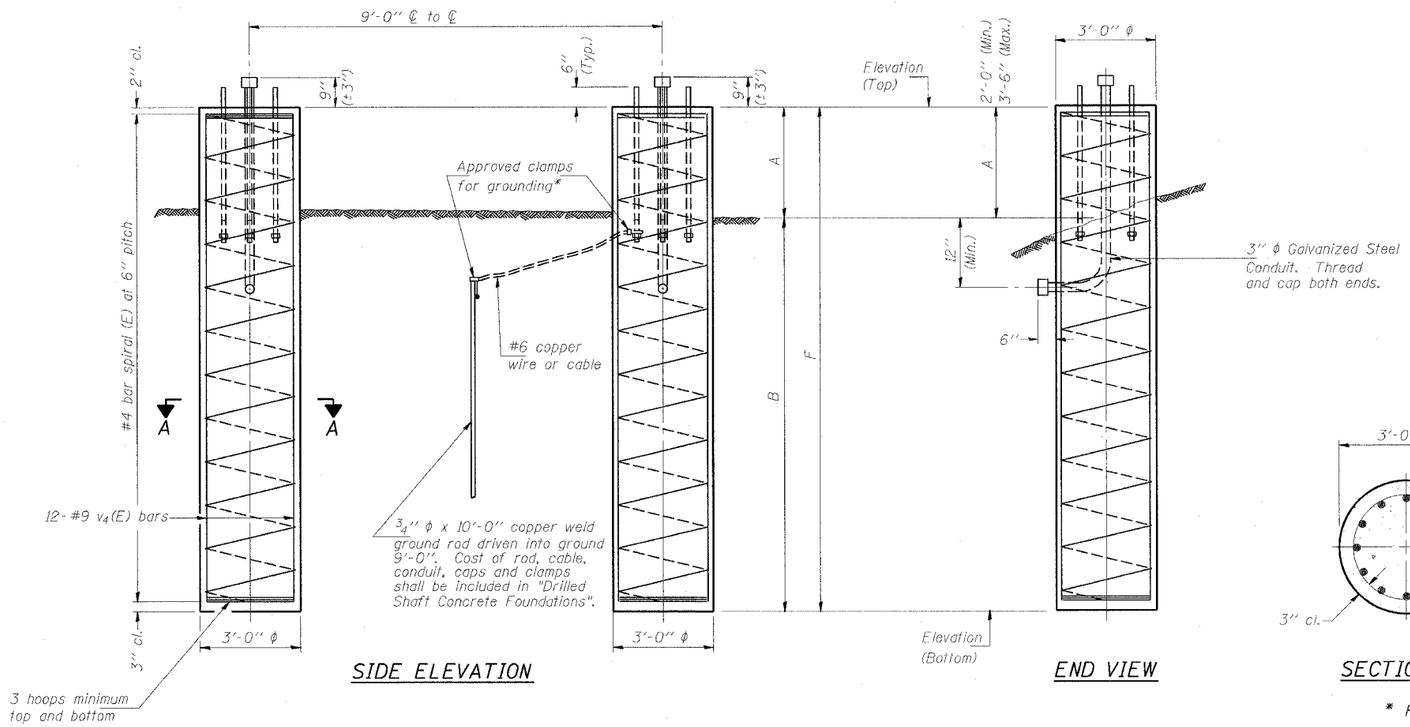

SIDE ELEVATION

END VIEW

SECTION A-A

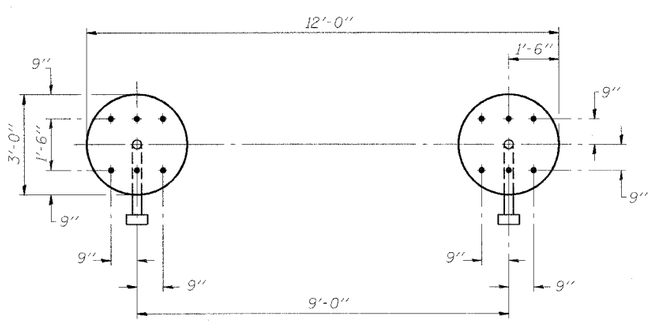

PLAN

BAR LIST - EACH FOUNDATION

Bar	Number	Size	Length	Shape
v4(E)	24	#9	F less 5"	——
#4 bar spiral (E) - see "SIDE ELEVATION"				

NOTES:

The foundation dimensions shown are based on the presence of mostly cohesive soils with an average Unconfined Compressive Strength (Qu) of at least 1.25 tsf, which must be determined by previous soil investigations at the jobsite. When other conditions are indicated, the boring data will be included in the plans and the foundation dimensions shown will be the result of site specific designs.

If the conditions encountered are different than those indicated, the Contractor shall notify the Engineer to determine if the foundation dimensions need to be modified. If dimensions "B" or "F" are revised by more than 12" by the Contractor, "as-built" plans shall be prepared and submitted to the District Bureau of Operations for future reference.

No sonotubes or decomposable forms shall be used below the lower conduit entrance.

Permanent metal forms or other shielding may not be left in place below that elevation without the Engineer's written permission.

Concrete shall be placed monolithically, without construction joints.

Backfill shall be placed per Article 502 of Standard Specification and prior to erection of support column.

A normal surface finish followed by a Bridge Seat Sealer application will be required on concrete surfaces above the lowest elevation 6" below finished ground line. Cost included in "Drilled Shaft Concrete Foundation".

* Foundation built in Contract 62300

Structure Number	Station	Left Foundation					Right Foundation					Class SI Concrete (Cu. Yds.)
		Elevation Top	Elevation Bottom	A	B	F	Elevation Top	Elevation Bottom	A	B	F	
IS0161094L055.41	4599+00	-	-	-	-	-	14.50'	-6.00'	2.50'	18.00'	20.50'	10.70

SGN-31

OVERHEAD SIGN STRUCTURES
DRILLED SHAFT DETAILS

ILLINOIS DEPARTMENT OF TRANSPORTATION
F.A.I. 94/90 (DAN RYAN EXPRESSWAY)
GARFIELD BLVD TO 31ST STREET (NB LOCAL LANES)
OVERHEAD SIGN STRUCTURES
(SPAN)

DESIGNED	AC
CHECKED	AS
DRAWN	RV
CHECKED	MSA

20
EXAMINED
ENGINEER OF STRUCTURAL SERVICES
PASSED
ENGINEER OF BRIDGES AND STRUCTURES

NUMBER	REVISION	DATE
2	MSA/AS	8/7/06

DETAILS FOR 12" ϕ SUPPORT FRAME
TYPE III-A TRUSS

MODIFIED BY CTE ENGINEERS, INC. FROM OS4-F4 1/7/05

08/08/2006 01:27:40 PM

STATE OF ILLINOIS
DEPARTMENT OF TRANSPORTATION

ROUTE NO.	SECTION	COUNTY	TOTAL SHEETS	SHEET NO.
90/94	•	COOK	565	276
FED. ROAD DIST. NO. 7		ILLINOIS	FED. AID PROJECT-	

SHEET NO. - - SHEETS

* 62301 (2021-922 PT2 ETC 2324.6-1P) R-10

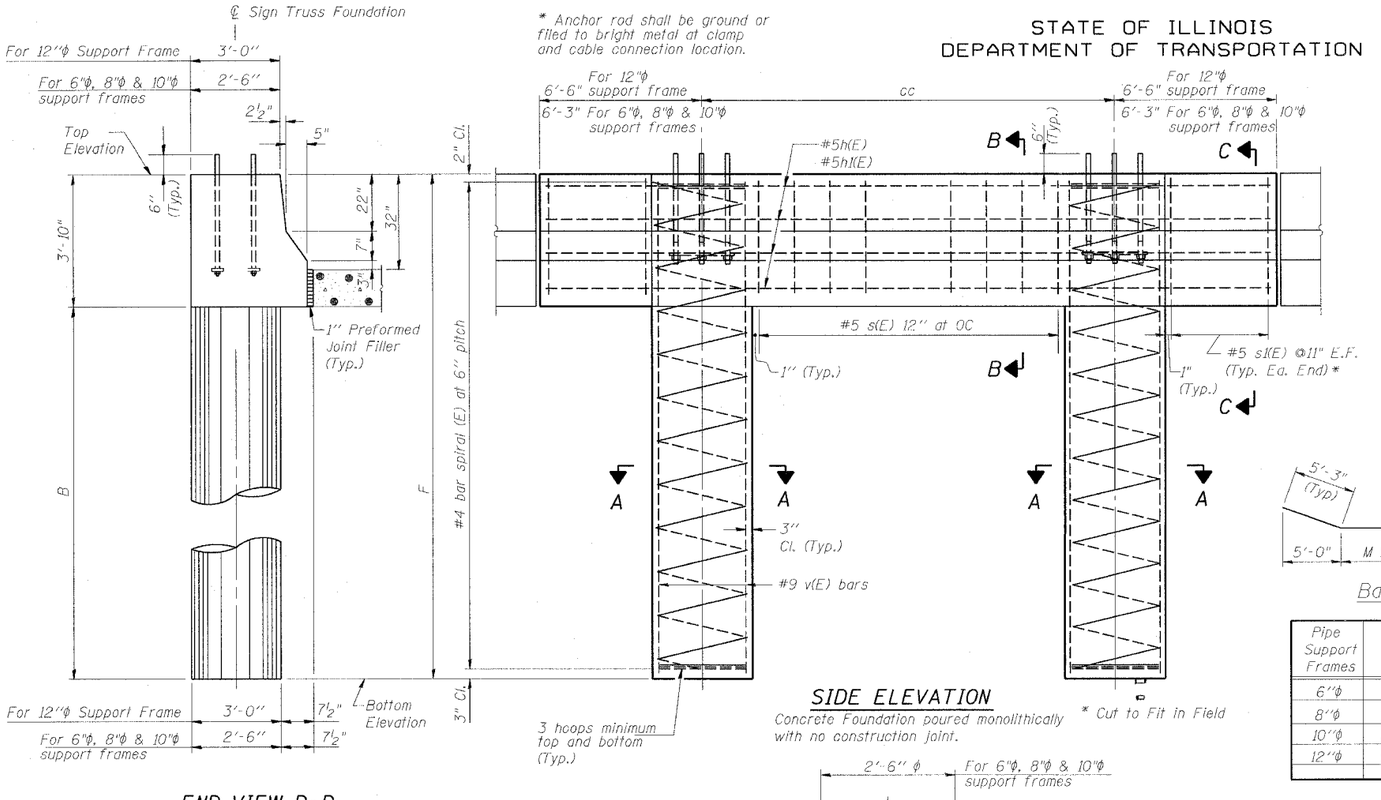

END VIEW D-D

SIDE ELEVATION

Concrete Foundation poured monolithically with no construction joint.

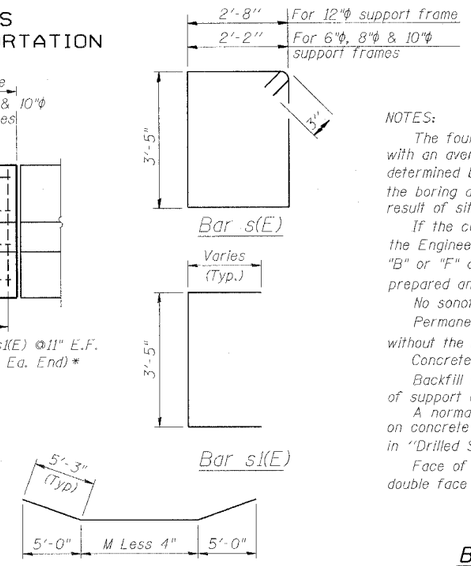

NOTES:

The foundation dimensions shown are based on the presence of mostly cohesive soils with an average Unconfined Compressive Strength (Qu) of at least 1.25 tsf, which must be determined by previous soil investigations at the jobsite. When other conditions are indicated, the boring data will be included in the plans and the foundation dimensions shown will be the result of site specific designs.

If the conditions encountered are different than those indicated, the Contractor shall notify the Engineer to determine if the foundation dimensions need to be modified. If dimensions "B" or "F" are revised by more than 12" by the Contractor, "as-built" plans shall be prepared and submitted to the District Bureau of Operations for future reference.

No sonotubes or decomposable forms shall be used below the lower conduit entrance.

Permanent metal forms or other shielding may not be left in place below that elevation without the Engineer's written permission.

Concrete shall be placed monolithically, without construction joints.

Backfill shall be placed per Article 502 of Standard Specification and prior to erection of support column.

A normal surface finish followed by a Bridge Seat Sealer application will be required on concrete surfaces above the lowest elevation 6" below finished ground line. Cost included in "Drilled Shaft Concrete Foundation".

Face of median support foundation shall match dimensions of permanent concrete barrier, double face (32" height)

Pipe Support Frames	cc	M	a	a/2
6"φ	7'-0"	9'-6"	0'-11"	5½"
8"φ	7'-6"	10'-0"	1'-1½"	6¾"
10"φ	8'-3"	10'-9"	1'-3"	7½"
12"φ	9'-0"	12'-0"	1'-6"	9"

BAR LIST - EACH FOUNDATION

Bar	Number	Size	Length	Shape
h(E)	6	#5	L less 0'-4"	
h1(E)	4	#5	M less 4" + 10'-6"	
s(E)	Varies	#5	13'-8" or 12'-8"	□
s1(E)	24	#5	Varies	C
v(E)	24	#9	F less 0'-5"	— For 12"φ support frame
v(E)	16	#19	F less 0'-5"	— For 6"φ, 8"φ & 10"φ support frames
#4(E) bar spiral _ see Side Elevation				

LEFT FOUNDATION FROM CONTRACT 62300 TO BE USED

Pipe Support Frame	Structure Number	Station	Left Foundation Elevation Top	Left Foundation Elevation Bottom	Left Foundation B	Left Foundation F	Right Foundation Elevation Top	Right Foundation Elevation Bottom	Right Foundation B	Right Foundation F	Class SI Concrete (Cu. Yds.)
10"	IS016I094L056.60	4535+80	-	-	-	-	9.31	-12.02	17.5'	21.33'	15.0

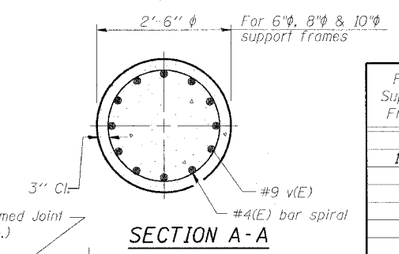

SECTION A-A

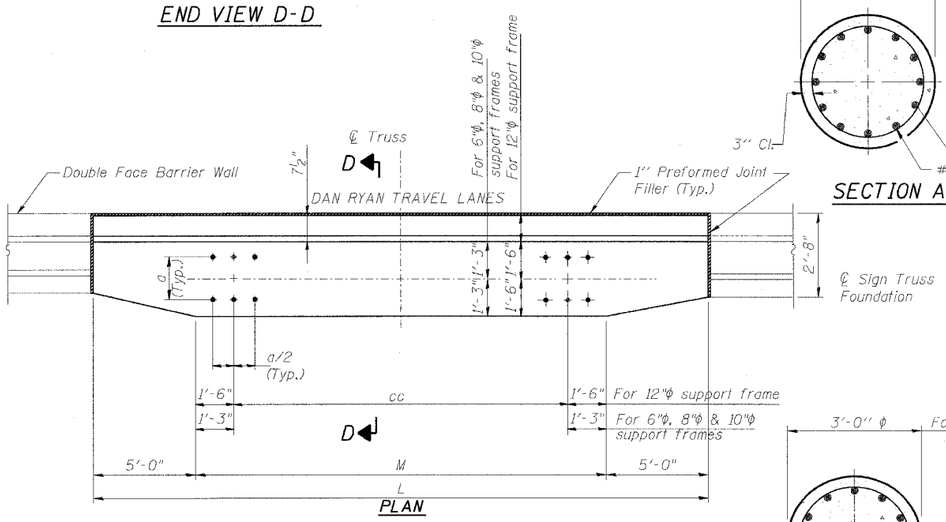

PLAN

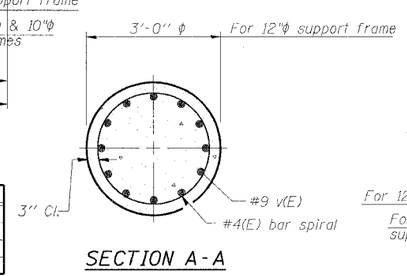

SECTION A-A

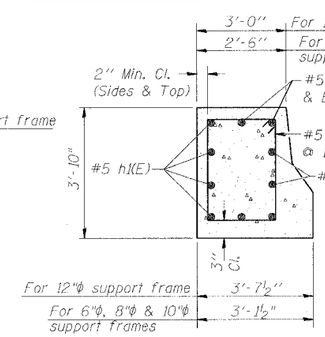

SECTION B-B

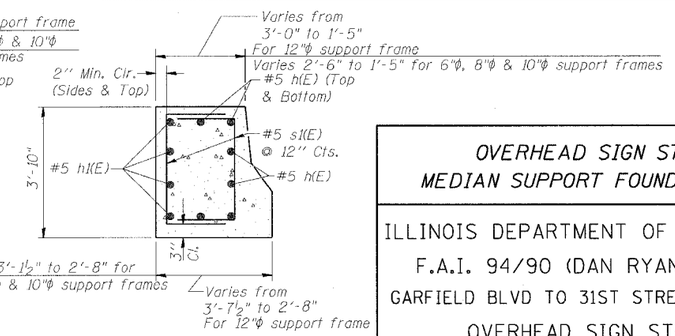

SECTION C-C

SGN-34

OVERHEAD SIGN STRUCTURES
MEDIAN SUPPORT FOUNDATION DETAILS

ILLINOIS DEPARTMENT OF TRANSPORTATION
F.A.I. 94/90 (DAN RYAN EXPRESSWAY)
GARFIELD BLVD TO 31ST STREET (NB LOCAL LANES)
OVERHEAD SIGN STRUCTURES
(SPAN)

DESIGNED	AC
CHECKED	AS
DRAWN	RV
CHECKED	PKC

EXAMINED - 20
ENGINEER OF STRUCTURAL SERVICES
PASSED
ENGINEER OF BRIDGES AND STRUCTURES

NUMBER	REVISION	DATE
2	MSA/AS	8/7/06

MODIFIED FROM OS4-MED

P:\P40468\Civil\18 & 19\Sign\Chr 18\Signing\SS180342Adgn
08/08/2006 01:45:59 PM

F.A.I. RTE.	SECTION	COUNTY	TOTAL SHEETS	SHEET NO.
90/94	•	COOK	565	326
STA.	TO STA.			
FED. ROAD DIST. NO. 1	ILLINOIS	FED. AID PROJECT		

62301 • (2021-922 PT2 ETC 2324.6-1P) R-10

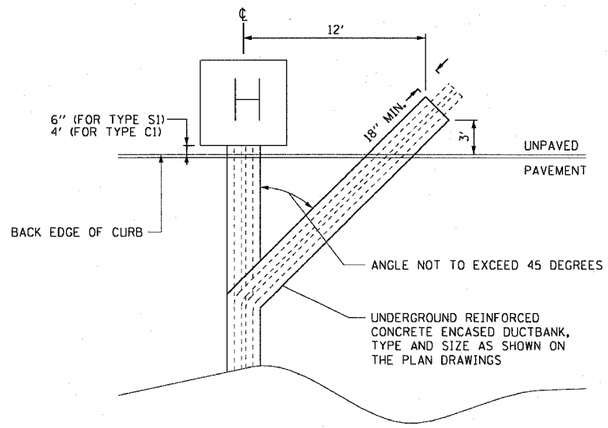

DUCTBANK INSTALLATION DETAIL ACROSS PAVEMENT

NOT TO SCALE

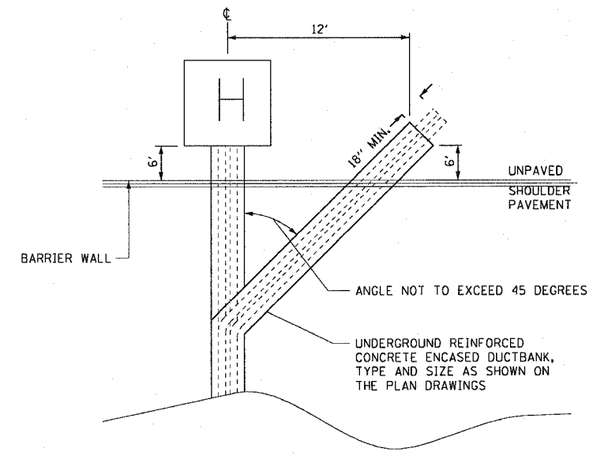

DUCTBANK INSTALLATION DETAIL ACROSS PAVEMENT
WITH SHOULDER BARRIER WALL

NOT TO SCALE

NOTES:

1. SEE DRAWINGS EI-100 AND EI-101 FOR ELECTRICAL SYMBOLS AND ABBREVIATIONS.
2. DIMENSIONS SHOWN ON THIS DRAWING ARE TYPICAL FOR MOST INSTALLATIONS. DIMENSIONS AND/OR STATION NUMBERS SPECIFIED ON THE PLAN DRAWINGS OR HANDHOLE DETAIL DRAWINGS WILL SUPERCEDE THE DIMENSIONS SHOWN ON THIS DRAWING.
3. SEE DRAWING EI-106 FOR CONDUIT DUCTBANK DETAILS.

EI-114

CTE | AECOM

REVISIONS	
NAME	DATE
ADDENDUM 1	7/27/06

ILLINOIS DEPARTMENT OF TRANSPORTATION
F.A.I. 90/94 (DAN RYAN EXPRESSWAY)
GARFIELD BLVD TO 31ST STREET (NB LOCAL LANES)

ELECTRICAL DUCTBANK DETAILS
ACROSS PAVEMENT

SCALE: NOT TO SCALE — DRAWN BY: HAR
DATE: JUNE 9, 2006 — CHECKED BY: JPC

F.A.I. RTE.	SECTION	COUNTY	TOTAL SHEETS	SHEET NO.
90/94	*	COOK	565	330

STA. TO STA.

FED. ROAD DIST. NO. 1 | ILLINOIS | FED. AID PROJECT
62301 • (2021-922 PT2 ETC 2324.6-1P) R-10

DOUBLE FACE BARRIER WALL ELEVATIONS

LOCAL LANE STATION	ELEVATION "X"	ELEVATION "Y"	ELEVATION T/WALL
4474+75	-1.98	-1.32	1.35
4475+00	-1.83	-1.15	1.52
4475+25	-1.65	-0.93	1.74
4475+50	55th ST Bridge		
4475+75	55th ST Bridge		
4476+00	-0.90	-0.15	2.52
4476+25	-0.65	0.11	2.77
4476+50	-0.38	0.35	3.02
4476+75	-0.12	0.61	3.28
4477+00	0.15	0.87	3.54
4477+25	0.41	1.13	3.80
4477+50	0.68	1.38	4.05
4477+75	0.94	1.64	4.31
4478+00	1.21	1.90	4.57
4478+25	1.47	2.15	4.82
4478+50	1.74	2.41	5.08
4478+75	2.01	2.67	5.34
4479+00	2.27	2.92	5.59
4479+25	2.54	3.18	5.85
4479+50	2.80	3.44	6.11
4479+75	3.07	3.70	6.37
4480+00	3.33	3.95	6.62
4480+25	3.60	4.21	6.88
4480+50	3.86	4.47	7.14
4480+75	4.13	4.72	7.39
4481+00	4.39	4.98	7.65
4481+25	4.66	5.24	7.91
4481+50	4.93	5.49	8.16
4481+75	5.19	5.75	8.42
4482+00	5.46	6.01	8.68
4482+25	5.72	6.26	8.93
4482+50	5.99	6.52	9.19
4482+75	6.25	6.78	9.45
4483+00	6.52	7.04	9.71
4483+25	6.77	7.29	9.96
4483+50	7.04	7.55	10.22
4483+75	7.30	7.81	10.48
4484+00	7.57	8.06	10.73
4484+25	7.84	8.32	10.99
4484+50	8.10	8.57	11.24
4484+75	8.37	8.81	11.48
4485+00	8.63	9.04	11.71
4485+25	8.90	9.24	11.91
4485+50	9.15	9.43	12.10
4485+75	9.38	9.61	12.28
4486+00	9.60	9.77	12.44
4486+25	9.79	9.91	12.58
4486+50	9.95	10.03	12.70
4486+75	10.10	10.14	12.81
4487+00	10.22	10.24	12.91
4487+25	10.33	10.32	13.00
4487+50	10.41	10.38	13.08
4487+75	10.47	10.42	13.14
4488+00	10.51	10.45	13.18
4488+25	10.52	10.47	13.19
4488+50	10.52	10.46	13.19
4488+75	10.49	10.44	13.16
4489+00	10.44	10.41	13.11
4489+25	10.37	10.36	13.04
4489+50	10.28	10.29	12.96
4489+75	10.16	10.21	12.88
4490+00	10.03	10.11	12.78
4490+25	9.87	9.99	12.66
4490+50	9.69	9.86	12.53
4490+75	9.49	9.71	12.38
4491+00	9.27	9.55	12.22
4491+25	9.03	9.37	12.04
4491+50	8.77	9.17	11.84
4491+75	8.52	8.96	11.63
4492+00	8.26	8.73	11.40
4492+25	8.01	8.49	11.16
4492+50	7.75	8.23	10.90
4492+75	7.50	7.97	10.64
4493+00	7.24	7.71	10.38
4493+25	6.99	7.45	10.12

LOCAL LANE STATION	ELEVATION "X"	ELEVATION "Y"	ELEVATION T/WALL
4493+50	6.73	7.20	9.87
4493+75	6.48	6.94	9.61
4494+00	6.22	6.68	9.35
4494+25	5.97	6.42	9.09
4494+50	5.71	6.16	8.83
4494+75	5.46	5.90	8.57
4495+00	5.19	5.64	8.31
4495+25	4.94	5.39	8.06
4495+50	4.68	5.13	7.80
4495+75	4.43	4.87	7.54
4496+00	4.17	4.61	7.28
4496+25	3.92	4.35	7.02
4496+50	3.67	4.09	6.76
4496+75	3.41	3.83	6.50
4497+00	3.16	3.57	6.24
4497+25	2.90	3.32	5.99
4497+50	2.65	3.06	5.73
4497+75	2.39	2.82	5.48
4498+00	2.14	2.58	5.25
4498+25	1.88	2.30	4.96
4498+50	1.63	2.02	4.69
4498+75	1.37	1.76	4.43
4499+00	1.12	1.52	4.18
4499+25	0.84	1.27	3.94
4499+50	0.58	1.02	3.69
4499+75	0.30	0.78	3.45
4500+00	0.04	0.53	3.20
4500+25	-0.22	0.29	2.95
4500+50	-0.47	0.03	2.70
4500+75	-0.72	-0.21	2.45
4501+00	-0.97	-0.47	2.20
4501+25	-1.19	-0.73	1.94
4501+50	-1.41	-0.98	1.69
4501+75	51st ST Bridge		
4502+00	51st ST Bridge		
4502+25	51st ST Bridge		
4502+50	51st ST Bridge		
4502+75	-2.65	-2.13	0.54
4503+00	-2.78	-2.27	0.39
4503+25	-2.88	-2.37	0.30
4503+50	-2.94	-2.42	0.25
4503+75	-2.96	-2.44	0.23
4504+00	-2.93	-2.41	0.26
4504+25	-2.85	-2.34	0.33
4504+50	-2.74	-2.24	0.43
4504+75	-2.58	-2.09	0.58
4505+00	-2.37	-1.90	0.77
4505+25	-2.12	-1.67	1.00
4505+50	-1.83	-1.41	1.26
4505+75	-1.50	-1.09	1.58
4506+00	-1.14	-0.74	1.93
4506+25	-0.78	-0.36	2.31
4506+50	-0.42	0.05	2.71
4506+75	-0.07	0.45	3.12
4507+00	0.29	0.82	3.48
4507+25	0.65	1.18	3.85
4507+50	1.00	1.57	4.24
4507+75	1.36	1.96	4.63
4508+00	1.72	2.34	5.01
4508+25	2.08	2.73	5.40
4508+50	2.43	3.12	5.79
4508+75	2.79	3.50	6.17
4509+00	3.15	3.89	6.56
4509+25	3.51	4.27	6.94
4509+50	3.86	4.66	7.33
4509+75	4.22	5.05	7.72
4510+00	4.58	5.43	8.10
4510+25	4.94	5.81	8.48
4510+50	5.29	6.17	8.84
4510+75	5.65	6.53	9.20
4511+00	6.01	6.88	9.55
4511+25	6.36	7.21	9.88
4511+50	6.72	7.52	10.19
4511+75	7.05	7.81	10.48
4512+00	7.35	8.07	10.74

LOCAL LANE STATION	ELEVATION "X"	ELEVATION "Y"	ELEVATION T/WALL
4512+25	7.64	8.32	10.99
4512+50	7.91	8.54	11.21
4512+75	8.16	8.74	11.41
4513+00	8.39	8.92	11.59
4513+25	8.59	9.07	11.74
4513+50	8.77	9.20	11.87
4513+75	8.92	9.32	11.99
4514+00	9.05	9.41	12.08
4514+25	9.16	9.47	12.14
4514+50	9.26	9.49	12.16
4514+75	9.34	9.49	12.16
4515+00	9.39	9.47	12.14
4515+25	9.43	9.51	12.18
4515+50	9.44	9.52	12.19
4515+75	9.44	9.50	12.17
4516+00	9.43	9.45	12.12
4516+25	9.38	9.36	12.05
4516+33	9.33	9.33	12.00
4542+75	10.25	10.21	12.92
4543+00	10.19	10.00	12.86
4543+25	10.12	9.75	12.79
4543+50	10.03	9.46	12.70
4543+75	9.89	9.14	12.56
4544+00	9.70	8.84	12.37
4544+25	9.48	8.56	12.15
4544+50	9.25	8.28	11.91
4544+75	8.99	8.05	11.66
4545+00	8.71	7.84	11.38
4545+25	8.41	7.69	11.08
4545+50	8.10	7.55	10.76
4545+75	7.75	7.36	10.42
4546+00	7.39	7.17	10.06
4546+25	7.01	6.96	9.68
4546+50	6.62	6.74	9.41
4546+75	6.23	6.49	9.16
4547+00	5.84	6.22	8.89
4547+25	5.45	5.95	8.61
4547+50	5.07	5.63	8.30
4547+75	4.68	5.32	7.99
4548+00	4.29	4.98	7.64
4548+25	3.90	4.62	7.29
4548+50	3.51	4.25	6.92
4548+75	3.12	3.88	6.54
4549+00	2.73	3.47	6.14
4549+25	2.34	3.13	5.80
4549+50	1.95	2.76	5.43
4549+75	1.57	2.39	5.05
4550+00	1.18	2.01	4.68
4550+25	0.79	1.59	4.26
4550+50	0.40	1.17	3.83
4550+75	0.01	0.79	3.46
4551+00	-0.38	0.44	3.11
4551+25	-0.77	0.08	2.74
4551+50	-1.16	-0.29	2.38
4551+75	-1.55	-0.66	2.01
4552+00	-1.93	-1.01	1.66
4552+25	-2.32	-1.37	1.29
4552+50	-2.71	-1.74	0.93
4552+75	-3.10	-2.10	0.56
4553+00	-3.49	-2.46	0.20
4553+25	-3.85	-2.77	-0.10
4553+50	-4.17	-3.07	-0.41
4553+75	-4.44	-3.30	-0.64
4554+00	-4.68	-3.52	-0.85
4554+25	-4.87	-3.69	-1.03
4554+50	-5.02	-3.83	-1.17
4554+75	-5.13	-3.93	-1.26
4555+00	-5.20	-3.99	-1.33
4555+25	-5.23	-4.02	-1.36
4555+50	-5.21	-4.01	-1.34
4555+75	-5.15	-3.96	-1.29
4556+00	-5.05	-3.87	-1.20
4556+25	43rd ST Bridge		
4556+50	43rd ST Bridge		
4556+75	43rd ST Bridge		
4557+00	-4.24	-3.14	-0.47
4557+25	-3.94	-2.86	-0.19
4557+50	-3.65	-2.58	0.09
4557+75	-3.35	-2.30	0.37
4558+00	-3.06	-2.01	0.66

LOCAL LANE STATION	ELEVATION "X"	ELEVATION "Y"	ELEVATION T/WALL
4558+25	-2.76	-1.75	0.92
4558+50	-2.47	-1.50	1.17
4558+75	-2.17	-1.27	1.40
4559+00	-1.90	-1.06	1.61
4559+25	-1.65	-0.86	1.81
4559+50	-1.43	-0.69	1.98
4559+75	-1.23	-0.54	2.13
4560+00	-1.06	-0.40	2.27
4560+25	-0.91	-0.29	2.38
4560+50	-0.78	-0.19	2.48
4560+75	-0.68	-0.11	2.56
4561+00	-0.61	-0.05	2.62
4561+25	-0.56	-0.01	2.66
4561+50	-0.53	0.01	2.68
4561+75	-0.53	0.02	2.68
4562+00	-0.55	0.00	2.67
4562+25	-0.60	-0.03	2.63
4562+50	-0.68	-0.09	2.58
4562+75	-0.78	-0.16	2.51
4563+00	-0.90	-0.25	2.42
4563+25	-1.05	-0.36	2.31
4563+50	-1.22	-0.49	2.18
4563+75	-1.42	-0.63	2.03
4564+00	-1.64	-0.80	1.87
4564+25	-1.89	-0.98	1.68
4564+50	-2.16	-1.19	1.48
4564+75	-2.45	-1.41	1.26
4565+00	-2.76	-1.65	1.01
4565+25	-3.06	-1.91	0.75
4565+50	-3.36	-2.19	0.48
4565+75	-3.63	-2.47	0.19
4566+00	Root ST Bridge		
4566+25	Root ST Bridge		
4566+50	Root ST Bridge		
4566+75	-4.71	-3.51	-0.85
4567+00	-4.92	-3.69	-1.02
4567+25	-5.05	-3.83	-1.16
4567+50	-5.14	-3.92	-1.25
4567+75	-5.19	-3.97	-1.30
4568+00	-5.20	-3.98	-1.31
4568+25	-5.16	-3.95	-1.28
4568+50	-5.08	-3.87	-1.20
4568+75	-4.95	-3.75	-1.09
4569+00	-4.78	-3.60	-0.93
4569+25	-4.57	-3.39	-0.73
4569+50	-4.32	-3.15	-0.48
4569+75	-4.02	-2.87	-0.20
4570+00	-3.68	-2.54	0.13
4570+25	-3.29	-2.17	0.50
4570+50	-2.87	-1.78	0.89
4570+75	-2.45	-1.39	1.28
4571+00	-2.00	-0.98	1.69
4571+25	-1.60	-0.61	2.06
4571+50	-1.20	-0.23	2.43
4571+75	-0.83	0.11	2.78
4572+00	-0.49	0.43	3.10
4572+25	-0.18	0.72	3.39
4572+50	0.10	0.98	3.64
4572+75	0.34	1.21	3.87
4573+00	0.56	1.40	4.07
4573+25	0.75	1.57	4.24
4573+50	0.90	1.71	4.38
4573+75	1.03	1.82	4.49
4574+00	1.12	1.90	4.57
4574+25	1.19	1.95	4.62
4574+50	1.22	1.96	4.63
4574+75	1.25	1.92	4.59
4575+00	CJ Railroad Bridge		
4575+25	CJ Railroad Bridge		
4575+50	1.13	1.73	4.40
4575+75	1.01	1.60	4.27
4576+00	0.86	1.44	4.11
4576+25	0.68	1.25	3.92
4576+50	0.47	1.03	3.70
4576+75	0.23	0.78	3.45
4577+00	-0.05	0.50	3.17
4577+25	-0.35	0.19	2.86
4577+50	-0.68	-0.15	2.52
4577+75	-1.08	-0.53	2.14
4578+00	-1.52	-0.89	1.77

LOCAL LANE STATION	ELEVATION "X"	ELEVATION "Y"	ELEVATION T/WALL
4578+25	-1.95	-1.31	1.36
4578+50	-2.40	-1.76	0.90
4578+75	-2.89	-2.25	0.42
4579+00	-3.40	-2.75	-0.09
4579+25	-3.89	-3.25	-0.58
4579+50	-4.33	-3.70	-1.04
4579+75	-4.73	-4.12	-1.45
4580+00	-5.08	-4.48	-1.81
4580+25	-5.39	-4.80	-2.14
4580+50	-5.66	-5.08	-2.41
4580+75	-5.88	-5.31	-2.64
4581+00	-6.05	-5.50	-2.83
4581+25	-6.19	-5.64	-2.97
4581+50	-6.28	-5.73	-3.07
4581+75	-6.32	-5.79	-3.12
4582+00	-6.32	-5.79	-3.13
4582+25	-6.22	-5.75	-3.09
4582+50	Pershing Rd Bridge		
4582+75	Pershing Rd Bridge		
4583+00	Pershing Rd Bridge		
4583+25	-5.62	-5.15	-2.49
4583+50	-5.37	-4.89	-2.22
4583+75	-5.08	-4.58	-1.92
4584+00	-4.73	-4.23	-1.56
4584+25	-4.33	-3.83	-1.17
4584+50	-3.89	-3.39	-0.72
4584+75	-3.40	-2.90	-0.24
4585+00	-2.87	-2.37	0.29
4585+25	-2.31	-1.84	0.83
4585+50	-1.74	-1.30	1.37
4585+75	-1.18	-0.76	1.91
4586+00	-0.62	-0.22	2.45
4586+25	-0.05	0.32	2.99
4586+50	0.51	0.86	3.53
4586+69	0.94	1.27	3.94
4587+04	1.87	2.02	4.69
4587+56	2.98	3.13	5.80
4587+91	3.53	3.85	6.52
4588+00	3.70	4.02	6.69
4588+25	4.18	4.51	7.18
4588+50	4.65	4.98	7.65
4588+75	5.10	5.44	8.10
4589+00	5.53	5.88	8.54
4589+25	5.95	6.30	8.97
4589+50	6.35	6.71	9.38
4589+75	6.74	7.11	9.77
4590+00	7.12	7.49	10.15
4590+25	7.48	7.85	10.52
4590+50	7.82	8.20	10.87
4590+75	8.15	8.53	11.20
4591+00	8.46	8.85	11.52
4591+25	8.76	9.16	11.82
4591+50	9.04	9.45	12.11
4591+75	9.31	9.72	12.39
4592+00	9.56	9.98	12.64
4592+25	9.80	10.22	12.89
4592+50	10.02	10.45	13.11
4592+75	10.23	10.66	13.33
4593+00	10.42	10.86	13.53
4593+25	10.59	11.04	13.71
4593+50	10.76	11.21	13.87
4593+75	10.90	11.36	14.03
4594+00	11.03	11.50	14.16
4594+25	11.15	11.62	14.29
4594+50	11.25	11.73	14.39
4594+75	11.33	11.82	14.48
4595+00	11.40	11.89	14.56
4595+25	11.46	11.95	14.62
4595+50	11.50	12.00	14.67
4595+75	11.52	12.03	14.70
4596+00	11.53	12.05	14.71
4596+25	11.53	12.05	14.71
4596+50	11.50	12.03	14.70
4596+75	11.47	12.00	14.67
4597+00	11.42	11.96	14.62
4597+25	11.35	11.90	14.56
4597+50	11.27	11.82	14.49
4597+75	11.17	11.73	14.40
4598+00	11.06	11.63	14.29
4598+25	10.93	11.51	14.17

LOCAL LANE STATION	ELEVATION "X"	ELEVATION "Y"	ELEVATION T/WALL
4598+50	10.80	11.39	14.06
4598+75	10.66	11.25	13.92
4599+00	10.49	11.06	13.72
4599+25	10.27	10.87	13.54
4599+50	10.07	10.67	13.34
4599+75	9.85	10.46	13.13
4600+00	9.62	10.23	12.90
4600+25	9.37	9.99	12.66
4600+50	9.10	9.73	12.40
4600+75	8.82	9.46	12.13
4601+00	8.53	9.17	11.84
4601+25	8.22	8.87	11.54
4601+50	7.89	8.55	11.22
4601+75	7.55	8.22	10.89
4602+00	7.20	7.87	10.54
4602+25	6.83	7.51	10.17
4602+50	6.44	7.13	9.80
4602+75	6.04	6.74	9.40
4603+00	5.63	6.33	8.99
4603+25	5.20	5.90	8.57
4603+50	4.75	5.46	8.13
4603+75	4.29	5.01	7.67
4604+00	3.81	4.54	7.20
4604+25	3.32	4.05	6.72
4604+50	2.81	3.56	6.23
4604+75	2.29	3.07	5.73
4605+00	1.76	2.58	5.24
4605+25	1.27	2.08	4.75
4605+50	0.80	1.59	4.26
4605+75	0.37	1.10	3.77
4606+00	-0.02	0.66	3.33
4606+25	-0.38	0.26	2.93
4606+50	-0.70	-0.10	2.57
4606+75	-0.99	-0.41	2.26
4607+00	-1.25	-0.68	1.99
4607+25	-1.47	-0.90	1.76
4607+50	-1.65	-1.08	1.58
4607+75	-1.80	-1.22	1.45
4608+00	-1.92	-1.31	1.35
4608+25	-2.00	-1.36	1.30
4608+50	-2.05	-1.37	1.30
4608+75	-2.03	-1.33	1.34
4609+00	35th ST Bridge		
4609+25	35th ST Bridge		
4609+50	35th ST Bridge		
4609+75	-1.69	-0.73	1.93
4610+00	-1.59	-0.50	2.16
4610+25	-1.39	-0.27	2.39
4610+50	-1.17	-0.04	2.62
4610+75	-0.93	0.18	2.85
4611+00	-0.69	0.41	3.08
4611+25	-0.46	0.64	3.31
4611+50	-0.22	0.87	3.54
4611+75	0.01	1.10	3.77
4612+00	0.25	1.33	4.00
4612+25	0.49	1.56	4.23
4612+50	0.72	1.79	4.45
4612+75	0.96	2.01	4.68
4613+00	1.19	2.22	4.88
4613+25	1.42	2.40	5.07
4613+50	1.63	2.57	5.23
4613+75	1.81	2.71	5.38
4614+00	1.96	2.83	5.50
4614+25	2.09	2.94	5.60
4614+50	2.19	3.02	5.69
4614+75	2.27	3.08	5.75
4615+00	2.32	3.13	5.79
4615+25	2.34	3.15	5.82
4615+50	2.34	3.15	5.82
4615+75	2.31	3.14	5.80
4616+00	2.26	3.10	5.76
4616+25	2.18	3.04	5.71
4616+50	2.08	2.96	5.63
4616+75	1.95	2.86	5.53
4617+00	1.80	2.75	5.41
4617+25	1.61	2.61	5.27
4617+50	1.41	2.45	5.11
4617+75	1.18	2.27	4.94
4618+00	0.92	2.07	4.74
4618+25	0.64	1.85	4.52

LOCAL LANE STATION	ELEVATION "X"	ELEVATION "Y"	ELEVATION T/WALL
4618+50	0.36	1.61	4.28
4618+75	0.09	1.36	4.02
4619+00	-0.19	1.10	3.77
4619+25	-0.47	0.85	3.51
4619+50	-0.75	0.59	3.26
4619+75	-1.02	0.33	3.00
4620+00	-1.30	0.08	2.74
4620+25	-1.58	-0.18	2.49
4620+50	-1.86	-0.43	2.23
4620+75	-2.13	-0.69	1.98
4621+00	-2.41	-0.94	1.72
4621+25	-2.69	-1.20	1.47
4621+50	-2.97	-1.46	1.21
4621+75	-3.23	-1.70	0.97
4622+00	-3.46	-1.91	0.76
4622+25	-3.57	-2.08	0.59
4622+50	33rd ST Bridge		
4622+75	33rd ST Bridge		
4623+00	-3.84	-2.35	0.32
4623+25	-3.89	-2.36	0.31
4623+50	-3.83	-2.33	0.34
4623+75	-3.74	-2.26	0.40
4624+00	-3.60	-2.16	0.51
4624+25	-3.41	-2.01	0.66
4624+50	-3.18	-1.82	0.84
4624+75	-2.91	-1.61	1.06
4625+00	-2.64	-1.39	1.27
4625+25	-2.38	-1.18	1.49
4625+50	-2.11	-0.96	1.71
4625+75	-1.84	-0.74	1.92
4626+00	-1.57	-0.53	2.14
4626+25	-1.30	-0.31	2.36
4626+50	-1.04	-0.09	2.57
4626+75	-0.77	0.12	2.79
4627+00	-0.50	0.34	3.01
4627+25	-0.23	0.56	3.22
4627+50	0.03	0.77	3.44
4627+75	0.29	0.98	3.65
4628+00	0.50	1.15	3.82
4628+25	0.67	1.28	3.95
4628+50	0.80	1.38	4.04
4628+75	0.89	1.43	4.10
4629+00	0.94	1.45	4.11
4629+25	0.95	1.42	4.09
4629+50	0.91	1.36	4.03
4629+75	0.84	1.26	3.93
4630+00	0.72	1.12	3.79
4630+25	0.56	0.94	3.61
4630+50	0.36	0.73	3.39
4630+75	0.13	0.48	3.15
4631+00	-0.12	0.23	2.90
4631+25	-0.36	-0.01	2.65
4631+50	-0.60	-0.26	2.41
4631+75	-0.84	-0.51	2.16
4632+00	-1.09	-0.75	1.91
4632+25	-1.33	-1.00	1.67
4632+50	-1.57	-1.25	1.42
4632+75	-1.81	-1.50	1.17
4633+00	-2.06	-1.74	0.92
4633+25	-2.30	-1.99	0.68
4633+50	-2.54	-2.24	0.43
4633+75	-2.78	-2.48	0.18
4634+00	-3.03	-2.73	-0.06
4634+25	-3.27	-2.98	-0.31
4634+50	-3.51	-3.22	-0.56
4634+75	-3.76	-3.47	-0.81
4635+00	-4.00	-3.72	-1.05
4635+25	-4.21	-3.97	-1.30
4635+50	-4.37	-4.20	-1.53
4635+75	31st ST Bridge		
4636+00	31st ST Bridge		
4636+25	-4.68	-4.53	-1.86
4636+50	-4.78	-4.55	-1.88
4636+75	-4.67	-4.52	-1.86
4637+00	-4.60	-4.46	-1.79
4637+25	-4.49	-4.34	-1.68
4637+50	-4.33	-4.19	-1.52
4637+75	-4.14	-3.99	-1.32
4638+00	-3.90	-3.75	-1.08

1

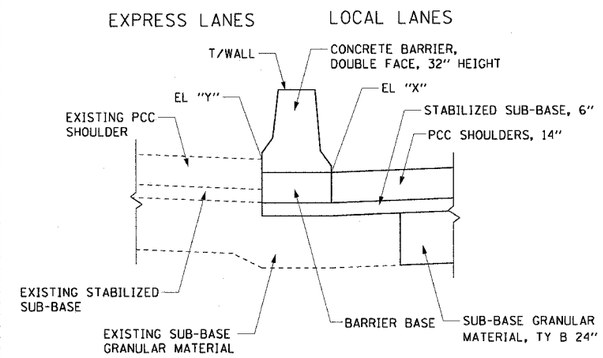

DOUBLE FACE BARRIER WALL
N.T.S.

NOTES:

1. SEE IDOT HIGHWAY STANDARD 637001 FOR DOUBLE FACE CONCRETE BARRIER DETAILS.
2. THE EDGE OF THE BARRIER WALL ALONG THE EXPRESS LANES SHOULDER SHALL MATCH THE EXISTING SHOULDER.
3. ELEVATIONS ARE TAKEN AT THE TOE OF THE DOUBLE FACE BARRIER WALL.
4. SEE RDT-8 FOR THE CONSTRUCTION OF THE SUB-BASE GRANULAR MATERIAL UNDER THE PROPOSED DOUBLE FACE BARRIER WALL.

RDT-1

	REVISIONS NAME	DATE
1	ADDED ELEVS	7/10/06

CTE | AECOM

ILLINOIS DEPARTMENT OF TRANSPORTATION
F.A.I. 90/94 (DAN RYAN EXPRESSWAY)
GARFIELD BLVD TO 31ST STREET (NB LOCAL LANES)

ROADWAY DETAILS
DOUBLE FACE BARRIER WALL ELEVATIONS

SCALE: NONE
DRAWN BY: NJH
DATE: June 9, 2006
CHECKED BY: RMG

P:\AP40468\CWIN8-Cntrs 18 & 19\SHC\Cntr 18\Roadway Details\MCB0012A.sht
7/28/2006 8:35:46 AM

F.A.I. RTE.	SECTION	COUNTY	TOTAL SHEETS	SHEET NO.
90/94	•	COOK	565	340
STA.		TO STA.		
FED. ROAD DIST. NO. 1	ILLINOIS	FED. AID PROJECT		

62301 • (2021-922 PT2 ETC 2324.6-1P) R-10

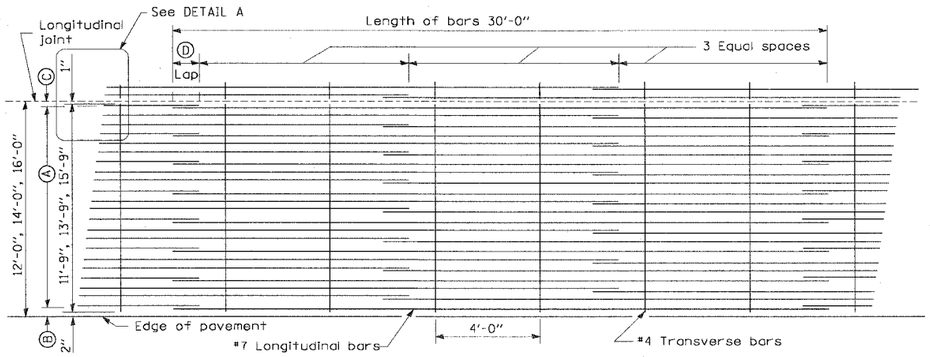

LAP DETAIL I

Pavement Width	Bar Size	Pavement Thickness	Ⓐ (Approx. Spacing)	Ⓑ	Ⓒ	Ⓓ
12 feet	#7	14"	23 spaces (24 bars) @ 6"	3½"	3"	26"
14 feet	#7	14"	27 spaces (28 bars) @ 6"	3½"	3"	26"
16 feet	#7	14"	31 spaces (32 bars) @ 6"	3½"	3"	26"

1

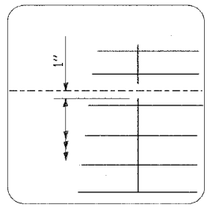

DETAIL A

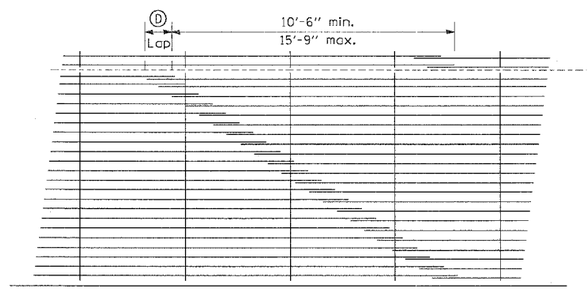

LAP DETAIL II

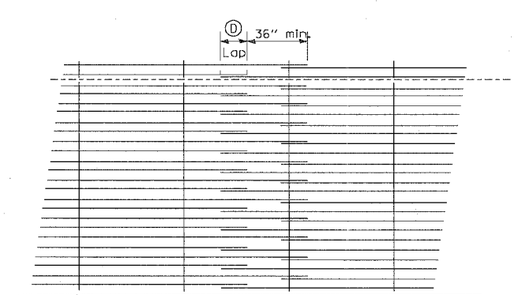

LAP DETAIL III

NOTES:

1. THE PAVEMENT REINFORCEMENT SHALL BE 4.5" FROM THE TOP OF PAVEMENT.
2. EXCEPT AS NOTED OR SHOWN, THE DIMENSIONS AND NOTES SPECIFIED FOR LAP DETAIL I ARE TYPICAL FOR LAP DETAIL II AND III.
3. THE Ⓑ DIMENSION AND THE DISTANCE FROM THE END OF THE TRANSVERSE BAR TO THE EDGE OF PAVEMENT MAY BE INCREASED BY 1" FOR SLIP FORM PAVING.

RDT-10

REVISIONS		
	NAME	DATE
1	ADDENDUM 1	7/27/06

ILLINOIS DEPARTMENT OF TRANSPORTATION
F.A.I. 90/94 (DAN RYAN EXPRESSWAY)
GARFIELD BLVD TO 31ST STREET (NB LOCAL LANES)

ROADWAY DETAILS
EXTENDED LANE REINFORCEMENT FOR CONTINUOUSLY REINFORCED PCC PAVEMENT

SCALE: NONE — DRAWN BY: NJH
DATE: June 9, 2006 — CHECKED BY: RMG

CTE | AECOM

P:\P40468\CIVIL\G-Cntrs 18 & 19\STHCntr 19\Roadway Details\MC180102A.stt
7/27/2006 5:30:59 PM

F.A.I.	SECTION	COUNTY	TOTAL SHEETS	SHEET NO.
94/90	*	COOK	565	354
STA.		TO STA.		
FED. ROAD DIST. NO.	ILLINOIS	FED. AID PROJECT		

62301 *(2021-922 PT2 ETC 2324.6-1P) R-10

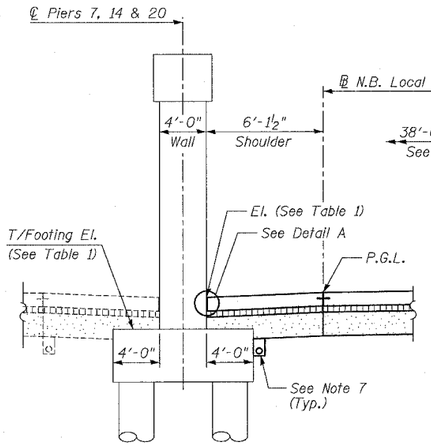

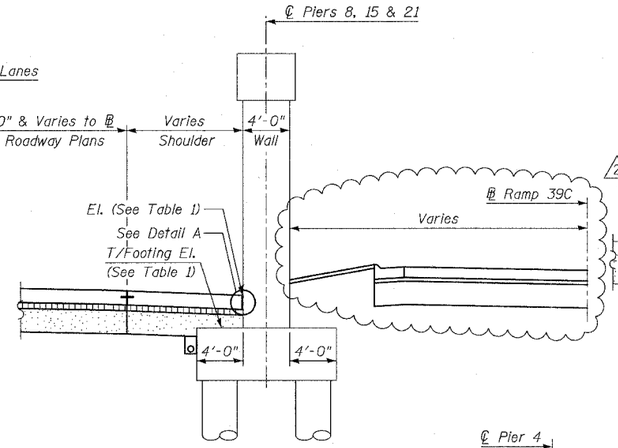

SHOULDER DETAIL AT OVERHEAD RAILROAD

Near 40th Street (S.N.'s 016-0138, 0139 & 0140)

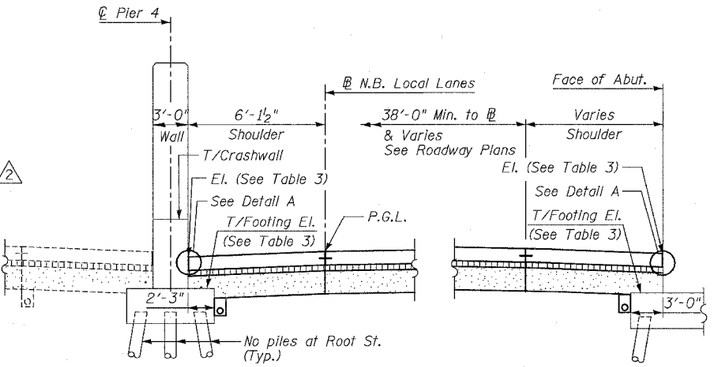

SHOULDER DETAIL AT 43rd STREET (S.N. 016-1155)

Root Street (S.N. 016-1154) Similar as noted

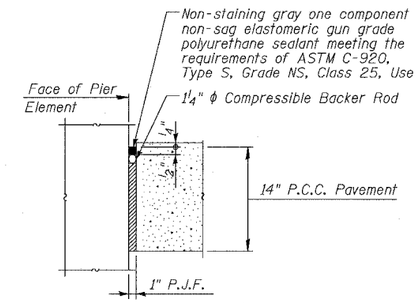

DETAIL A

Cost of P.J.F., Backer Rod and sealant included with PCC Shoulder

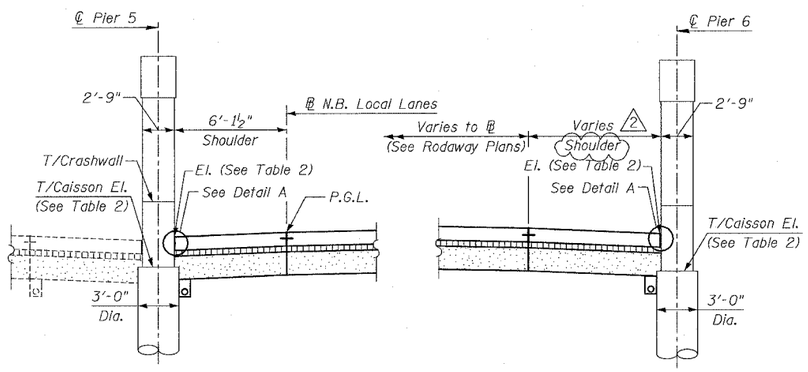

SHOULDER DETAIL AT OVERHEAD BRIDGES

For 31st Street (S.N. 016-1159)
33rd Street (S.N. 016-1158)
35th Street (S.N. 016-1160)

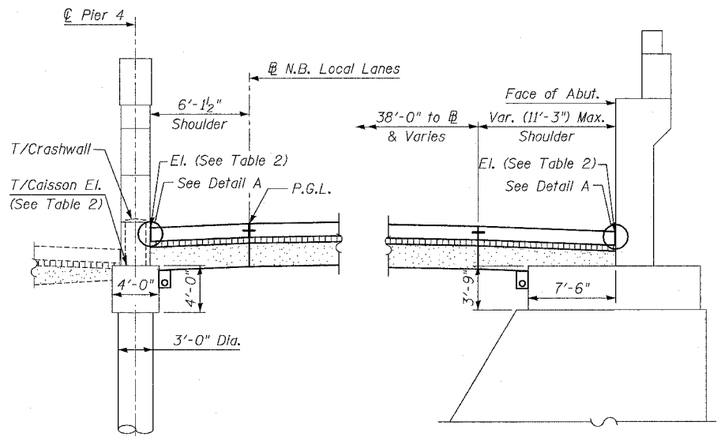

SHOULDER DETAIL AT 39th STREET (S.N. 016-0398)

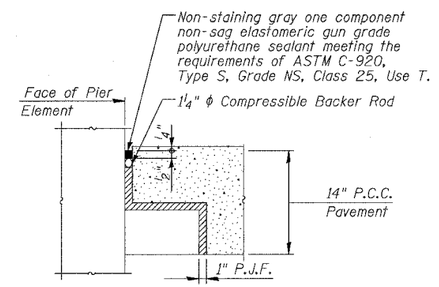

DETAIL B

Cost of P.J.F., Backer Rod and sealant included with PCC Shoulder

Notes:

1. See Typical Sections for Composition of Exist. & Prop. Pavement.
2. All views looking North.
3. Contractor shall use caution during pavement removal and excavation operations around existing overhead bridge foundations.
4. Top of Rock El. at Root Street is approx. El. -12.0
5. All dimensions at right angles to Expressway. △2
6. Use Detail B where pavement encroaches within bridge foundation.
7. Adjust underdrain location to clear foundation as directed by the Engineer.
8. See Roadway Plans and Details for locations of Single Face Barriers in front of bridge piers. Eliminate backer rod and sealant at these locations and adjust details as directed by the Engineer.

TABLE 1

PIER	T/FOOTING EL.	T/SHOULDER EL. MAX.	T/SHOULDER EL. MIN.
7	-1.37	0.6	0.5
8	-1.44	0.6	0.5
14	-0.57	1.3	1.2
15	-0.87	1.5	1.4
20	-2.66	-0.4	-0.7
21	-2.76	-1.0	-1.5

TABLE 2

LOCATION	PIER	T/CAISSON EL.	T/SHOULDER EL. MAX.	T/SHOULDER EL. MIN.
31st St.	5	-6.44	-4.4	-4.7
	6	-5.64	-4.8	-5.0
33rd St.	5	-5.36	-3.6	-3.8
	6	-4.97	-3.9	-4.1
35th St.	5	-3.89	-1.7	-2.0
	6	-3.69	-1.6	-1.8
39th St.	4	-11.30	-5.7	-6.2
	E. Abut.	-8.25	-5.4	-6.2

TABLE 3

LOCATION	PIER	T/FOOTING EL.	T/SHOULDER EL. MAX.	T/SHOULDER EL. MIN.
Root St.	4	-8.0	-3.9	-4.5
	Abut	-8.0	-4.0	-4.5
43rd St.	4	-7.0	-4.4	-5.0
	Abut	-7.0	-4.4	-4.9

LEGEND

- Concrete Pavement △2
- Stabilized Sub-base
- Sub-base Granular material

RDT-21

REVISIONS	
NAME	DATE
ADDENDUM 2	8/04/06

ILLINOIS DEPARTMENT OF TRANSPORTATION

F.A.I. 94/90 (DAN RYAN EXPRESSWAY)
GARFIELD BLVD TO 31ST STREET (NB LOCAL LANES)

ROADWAY DETAILS
PAVEMENT DETAILS AT
CROSS STREET BRIDGES

SCALE: NTS — DRAWN BY: MTR
DATE: JUNE 9, 2006 — CHECKED BY: BLU

BOWMAN, BARRETT & ASSOCIATES INC.
CONSULTING ENGINEERS
Chicago, Illinois
312.228.0100
www.bbandainc.com

N:\660\acad\cbl\NB\RET AINING WALLS\660_185*pavement_detail.dgn

8/4/2006 2:44:41 PM

F.A.I. RTE.	SECTION	COUNTY	TOTAL SHEETS	SHEET NO.
90/94	*	COOK	565	355
STA.		TO STA.		
FED. ROAD DIST. NO. 1	ILLINOIS	FED. AID PROJECT		

62301 * (2021-922 PT2 ETC 2324.6-1P) R-10

PIPER UNDERDRAINS 6"
N.T.S.

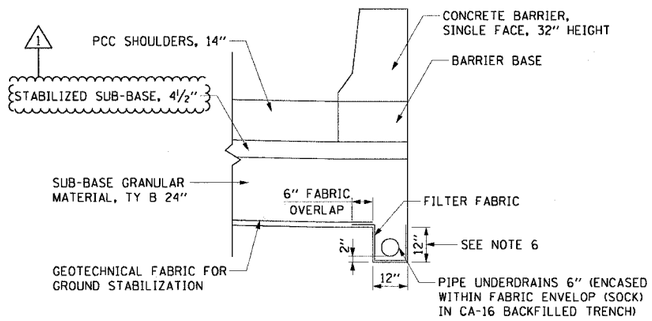

PIPE UNDERDRAINS 6"
LOCATED UNDER SINGLE FACE BARRIER WALL

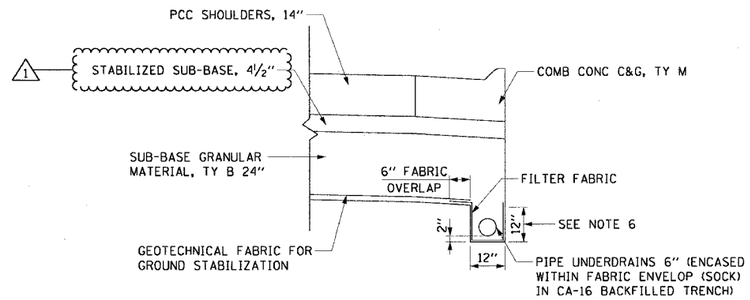

PIPE UNDERDRAINS 6"
LOCATED UNDER COMB CONC C&G

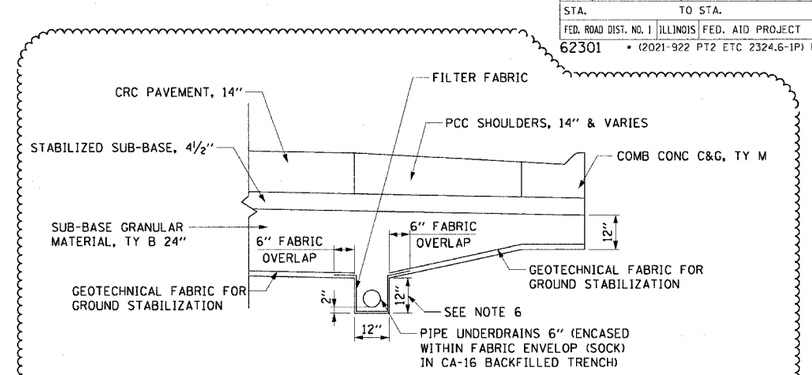

PIPE UNDERDRAINS 6"
LOCATED AT THE EDGE OF PAVEMENT

1

NOTES:

1. GEOTECHNICAL FABRIC FOR GROUND STABILIZATION SHALL BE PLACED SUCH THAT IT EXTENDS TO THE EDGE OF THE TRENCH AND OVERLAPS THE FILTER FABRIC BY A MINIMUM OF 6". AT NO TIME SHALL THE GEOTECHNICAL FABRIC FOR GROUND STABILIZATION BE OVER OR COVER THE UNDERDRAIN TRENCH.
2. NO CONSTRUCTION TRAFFIC SHALL BE ALLOWED ON THE TRENCH UNTIL A MINIMUM OF 12" OF COMPACTED SUB-BASE IS PROVIDED.
3. THE PIPE UNDERDRAIN TRENCH SHALL BE LINED WITH FILTER FABRIC ON THE BOTTOM AND SIDES OF THE TRENCH. THE TOP OF THE TRENCH MUST NOT BE COVERED WITH ANY FABRIC.
4. FILTER FABRIC, FABRIC ENVELOPE, AND CA-16 AGGREGATE ARE INCLUDED IN THE UNIT COST OF PIPE UNDERDRAIN, 6".
5. CONTRACTOR SHALL FLUSH PIPE UNDERDRAIN WITH WATER TO INSURE UNDERDRAIN IS FUNCTIONING PROPERLY PRIOR TO THE PLACEMENT OF STABILIZED SUB-BASE. PRIOR TO COMMENCING THIS WORK, THE CONTRACTOR SHALL PROVIDE THE ENGINEER WITH HIS APPROACH AND METHODS FOR COMPLETING THIS WORK, FOR THE ENGINEER'S REVIEW AND APPROVAL. THE COST OF FLUSHING THE PIPE IS INCLUDED IN THE UNIT COST OF PIPE UNDERDRAIN, 6".
6. WHERE PIPE UNDERDRAIN CONFLICTS WITH EXISTING UTILITY CROSSINGS, DEPTH WILL VARY AS NEEDED TO ACHIEVE FLOW DIRECTIONS SHOWN ON DRAINAGE PLANS. MINIMUM DEPTH OF PIPE UNDERDRAIN IS 12" BELOW SUBGRADE. COST OF ADDITIONAL PIPE UNDERDRAIN DEPTH SHALL BE INCLUDED IN THE UNIT COST OF PIPE UNDERDRAIN, 6".
7. SEE ROADWAY DETAIL SHEETS RDT21A & RDT21B FOR PIPE UNDERDRAIN DETAILS AT CROSS STREET BRIDGES.

PIPER UNDERDRAINS 12"
N.T.S.

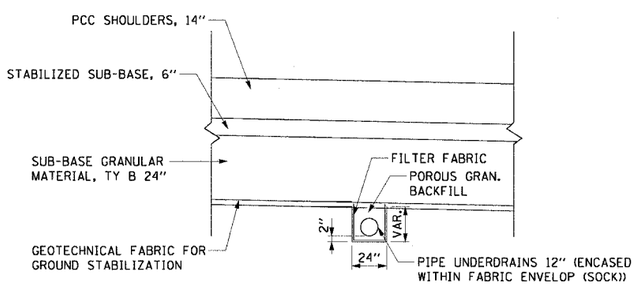

PIPE UNDERDRAINS 12"
LOCATED UNDER PROPOSED PAVEMENT

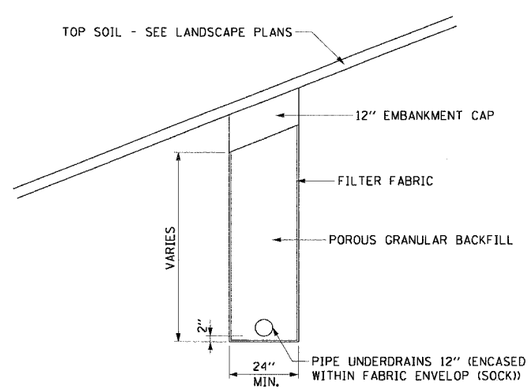

PIPE UNDERDRAINS 12"
LOCATED OUTSIDE PROPOSED PAVEMENT

NOTES:

1. THE PIPE UNDERDRAIN TRENCH SHALL BE LINED WITH FILTER FABRIC ON THE BOTTOM AND SIDES OF THE TRENCH.
2. FILTER FABRIC AND FABRIC ENVELOPE ARE INCLUDED IN THE UNIT COST OF PIPE UNDERDRAIN, 12".

CTE | AECOM

DDT-1

REVISIONS		
	NAME	DATE
1	ADDENDUM 1	7/27/06

ILLINOIS DEPARTMENT OF TRANSPORTATION
F.A.I. 90/94 (DAN RYAN EXPRESSWAY)
GARFIELD BLVD TO 31ST STREET (NB LOCAL LANES)

DRAINAGE DETAILS
PIPE UNDERDRAINS 6"

SCALE: NONE DRAWN BY: RMG
DATE: June 9, 2006 CHECKED BY: XXX

P:\9-40465\CIVIL\B-Cntrs 1B & 19\STA\Cntr 19\Roadway Details\D71B00IZA.stl
7/28/2006 10:33:30 PM

F.A.I.	SECTION	COUNTY	TOTAL SHEETS	SHEET NO.
94/90	*	COOK	565	373
STA.		TO STA.		
FED. ROAD DIST. NO.	ILLINOIS	FED. AID PROJECT		

62301 *(2021-922 PT2 ETC 2324.6-1P) R-10

Benchmark: BM No. 3538
"+" Cut on Easterly flange bolt of fire hydrant at Northeast corner of 47th Street and La Salle St.
El. 17.31

All elevations are based on the Chicago City Datum (C.C.D.)

Salvage: None

Existing Structure Description:

The existing wall was built in 1962 as part of Section 2122-907HB and Section 2122-921 PT. I in two phases designated as part of the 47th Street Bridge (S.N. 016-1156) and Wall "E-4". The existing wall is a cast-in-place concrete cantilever type on pile supported footings with a total length of 323'-4". The height from top of wall to bottom of footing varies from approximately 18'-9" to 7'-0" with a 1'-3" thick stem. There is an existing chain link fence mounted on top of wall. The wall ties into the NE wing wall of the 47th Street Bridge and this corner was modified in Contract 62586 to allow for a corner garden. A portion of the wall will be completely removed for the construction of the new wall and the top portion of the remaining will be reconstructed.

*Corner Garden wall at an angle with respect to wall, 7'-10" dimension is measured along original wall.

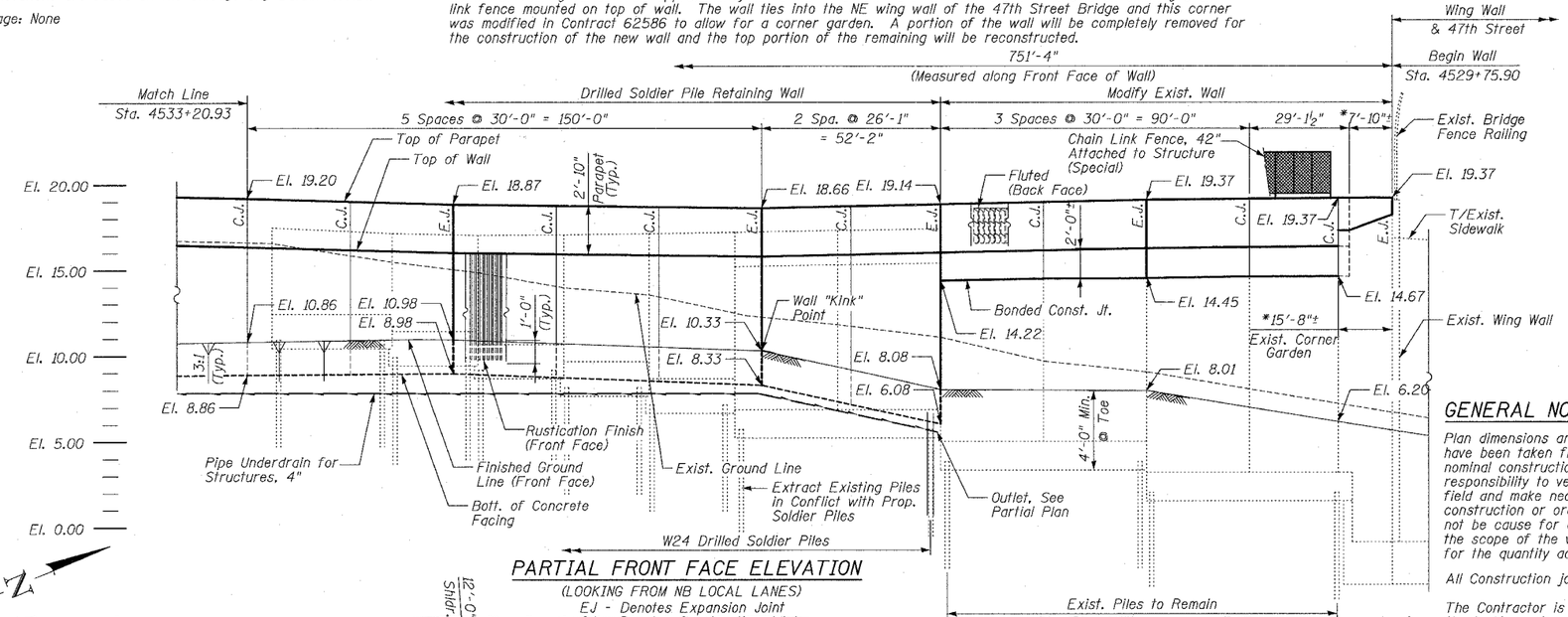

PARTIAL FRONT FACE ELEVATION

(LOOKING FROM NB LOCAL LANES)
EJ - Denotes Expansion Joint
CJ - Denotes Construction Joint

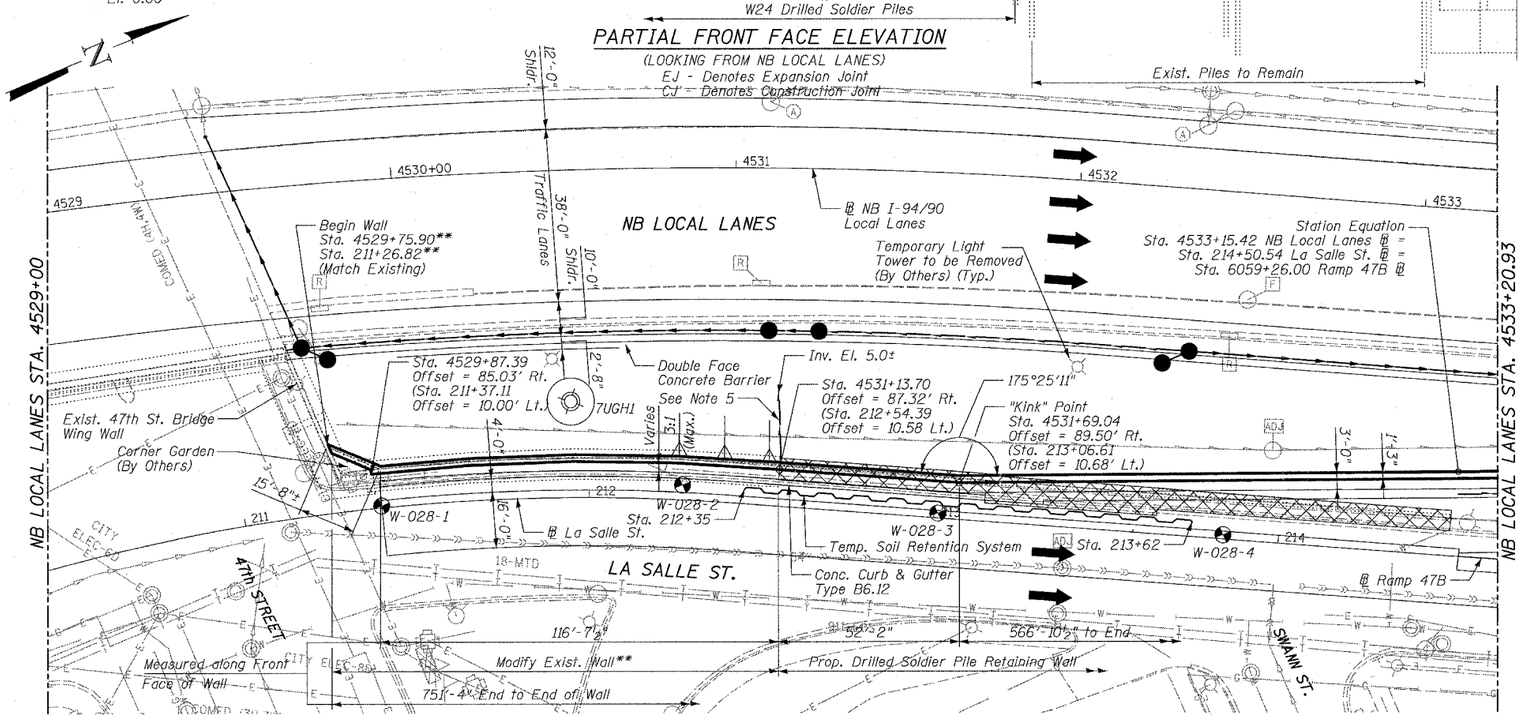

PARTIAL PLAN

** Utilize existing wall as reference to construct modification

DESIGN SPECIFICATIONS

2002 AASHTO

DESIGN STRESSES

FIELD UNITS

f'c = 3,500 psi
fy = 60,000 psi (Reinforcement)
fy = 36,000 psi (M270 Gr 36) Soldier Piles

TOTAL BILL OF MATERIAL

Item	Unit	Quantity
Removal of Existing Structures	Each	1
Porous Granular Embankment (Special)	Cu. Yd.	267
Concrete Removal	Cu. Yd.	18
Structure Excavation	Cu. Yd.	101
Concrete Structures	Cu. Yd.	197.7
Concrete Superstructure	Cu. Yd.	88.1
Protective Coat	Sq. Yd.	686
Rustication Finish	Sq. Ft.	4,352
Stud Shear Connectors	Each	1,034
Untreated Timber Lagging	Sq. Ft.	3,837
Furnishing Soldier Piles (W Section)	Foot	2,150
Reinforcement Bars, Epoxy Coated	Pound	41,160
Geocomposite Wall Drain	Sq. Yd.	311
Pipe Underdrains for Structures 4"	Foot	700
Pile Extraction	Each	20
Temporary Soil Retention System	Sq. Ft.	805
Drilling and Setting Soldier Piles (In Soil)	Cu. Ft.	12,579
Chain Link Fence, 42" Attached to Structure (Special)	Foot	470
Chain Link Gate Assembly (Special)	Each	1
Drilled Shaft In Soil, 44"	Foot	32

GENERAL NOTES:

Plan dimensions and details relative to existing structure have been taken from existing plans and are subject to nominal construction variations. It shall be the Contractor's responsibility to verify such dimensions and details in the field and make necessary approved adjustments prior to construction or ordering of materials. Such variations shall not be cause for additional compensation for a change in the scope of the work, however, the Contractor will be paid for the quantity actually furnished at the unit price for the work.

All Construction joints shall be bonded.

The Contractor is responsible for the design and performance of the lagging using no less then a 3" nominal rough-sawn thickness and timber with a minimum allowable bending stress f_b of 1000 psi.

All exposed concrete edges shall be chamfered ¾" except as noted.

Protective Coat shall be applied to the top and back face of parapet and to the exposed front face in areas where the wall is within 25 feet of edge of pavement.

Additional Notes:

1. Offsets given to Back Face of Wall. Station and offsets in parentheses are along Frontage Road or ramp.
2. For HMLT foundation and work pads, see Electrical Infrastructure Plans and Structure Details. Towers by others.
3. Wall to be built along straight chords between const. joints.
4. Min. Facing in contact with soldier pile shall be 3'-0".
5. Outlet pipe underdrain to daylight at invert given with 1% min. slope. Provide Rodent Shield. Cost included with Pipe Underdrain for Structures, 4"
6. See Sheet 8 for Offset Sketch.

LEGEND

- Soil Boring Location
- High Mast Lighting Foundation and Tower (See Notes)
- Removal of Exist. Structures
- Proposed Drainage Structure
- Proposed Underdrain
- Proposed Storm Sewer

STATE OF ILLINOIS
BRIAN L. UMBRIGHT
081-005584
CHICAGO, IL
LICENSED STRUCTURAL ENGINEER

Date: July 13, 2006
License Expires: November 30, 2006

APPROVED
FOR STRUCTURAL ADEQUACY ONLY

ENGINEER OF BRIDGES AND STRUCTURES

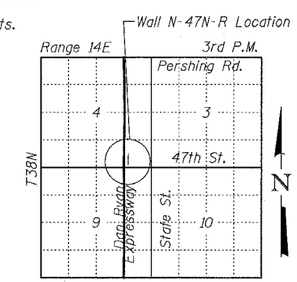

LOCATION SKETCH

SHEET 1 OF 24

REVISIONS		
	NAME	DATE
	REVISED	06/21/06
	REVISED	07/13/06
2	ADDENDUM 2	8/04/06

ILLINOIS DEPARTMENT OF TRANSPORTATION

F.A.I. 94/90 (DAN RYAN EXPRESSWAY)
GARFIELD BLVD TO 31ST STREET (NB LOCAL LANES)
COOK COUNTY
STA. 4529+75.90 TO STA. 4537+30.74
RETAINING WALL N-47N-R
GENERAL PLAN AND ELEVATION 1
S.N. 016-W977

SCALE: NTS
DATE: JUNE 9, 2006
DRAWN BY: MTR
CHECKED BY: BLU

BOWMAN, BARRETT & ASSOCIATES INC.
CONSULTING ENGINEERS
Chicago, Illinois
312.228.0100
www.bbandainc.com

N:\060\cadd\civil\NBRET_NINING WALLS\060_IBSGPH4FNR.dgn
8/10/2006 2:22:23 PM

F.A.I.	SECTION	COUNTY	TOTAL SHEETS	SHEET NO.
94/90	*	COOK	565	374
STA.		TO STA.		
FED. ROAD DIST. NO.	ILLINOIS	FED. AID PROJECT		

62301 *(2021-922 PT2 ETC 2324.6-1P) R-10

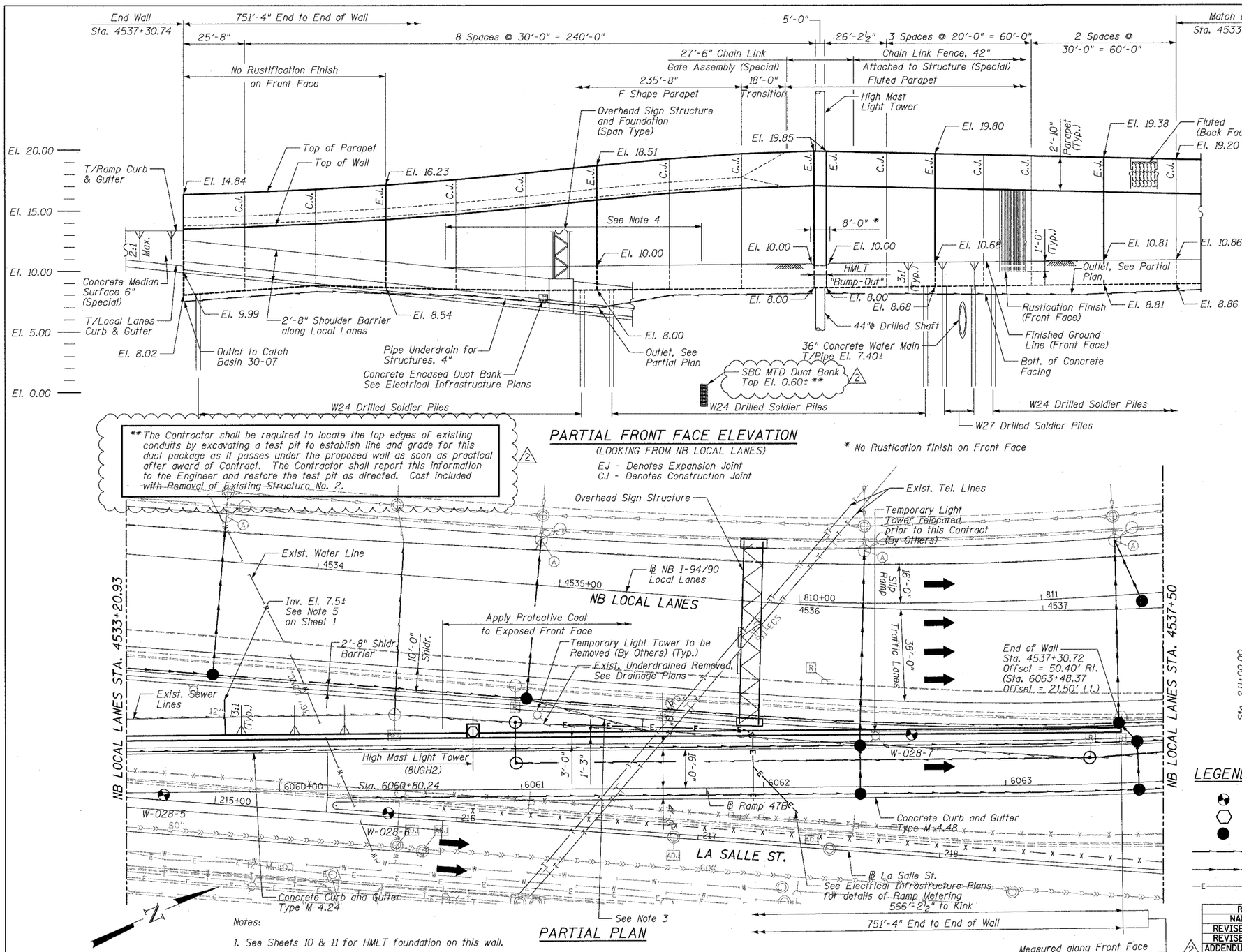

PARTIAL FRONT FACE ELEVATION

(LOOKING FROM NB LOCAL LANES)

EJ - Denotes Expansion Joint
CJ - Denotes Construction Joint

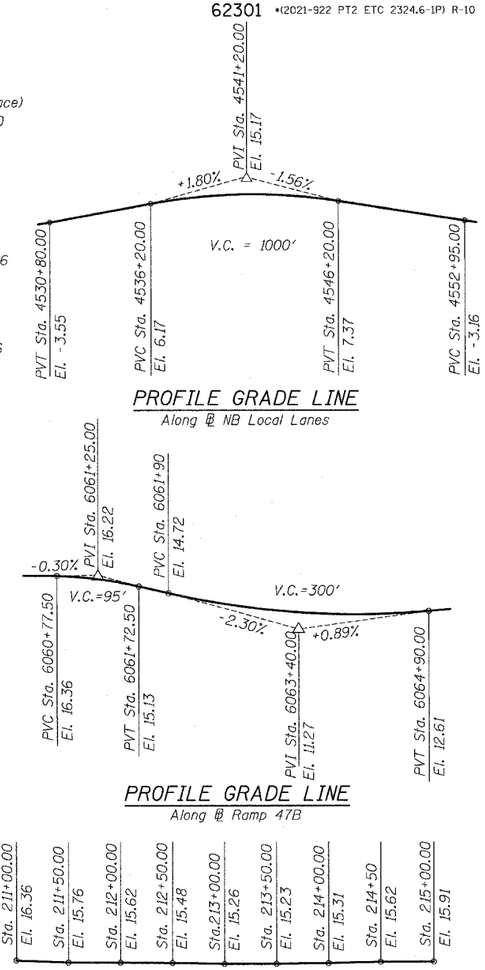

PROFILE GRADE LINE

Along ℄ NB Local Lanes

PROFILE GRADE LINE

Along ℄ Ramp 47B

BASELINE ELEVATIONS

At La Salle St.

PARTIAL PLAN

Notes:

1. See Sheets 10 & 11 for HMLT foundation on this wall.
2. Take notice of existing utilities. See Drainage and Utility Plans and Special Provisions for Status of Utilities to be Adjusted. Piles have been spaced to avoid utilities based upon best available information. Contractor shall verify utility locations, as directed by Engineer, before drilled shaft construction. Cost of verifying utility locations is included with Drilling and Setting Soldier Piles (in Soil).
3. Connect underdrain to Catch Basin at Inv. El. 0.0. Cost included with Pipe Underdrains for Structures, 4".
4. Concrete Median Surface 6" (Special) between front face of wall and back of shoulder barrier, see Roadway Plans for details. Worp paving as required to drain and fit around OHSS foundation.

LEGEND

- Soil Boring Location
- High Mast Lighting (Wall Mounted)
- Proposed Drainage Structure
- Proposed Underdrain
- Proposed Storm Sewer
- Proposed Electrical Line

SHEET 2 OF 24

REVISIONS	
NAME	DATE
REVISED	06/23/06
REVISED	07/13/06
2 ADDENDUM 2	8/04/06

ILLINOIS DEPARTMENT OF TRANSPORTATION

F.A.I. 94/90 (DAN RYAN EXPRESSWAY)
GARFIELD BLVD TO 31ST STREET (NB LOCAL LANES)
COOK COUNTY
STA. 4529+75.90 TO STA. 4537+30.74
RETAINING WALL N-47N-R
GENERAL PLAN AND ELEVATION 2
S.N. 016-W977

SCALE: NTS — DRAWN BY: MTR
DATE: JUNE 9, 2006 — CHECKED BY: BLU

BOWMAN, BARRETT & ASSOCIATES INC.
CONSULTING ENGINEERS
Chicago, Illinois
312.228.0100
www.bbandainc.com

N:\660\cad\MVR\RET WALLS\660_BSSP4MTNR_01.dgn
8/10/2006 3:48:18 PM

F.A.I.	SECTION	COUNTY	TOTAL SHEETS	SHEET NO.
94/90	*	COOK	565	375
STA.		TO STA.		
FED. ROAD DIST. NO.	ILLINOIS	FED. AID PROJECT		

62301 *(2021-922 PT2 ETC 2324.6-1P) R-10

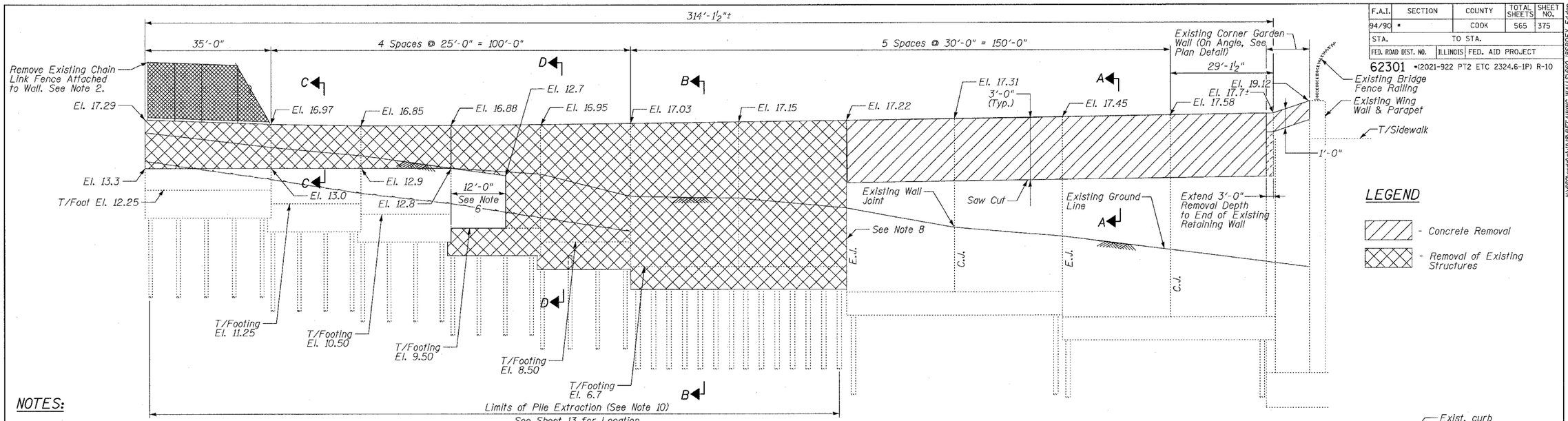

FRONT FACE ELEVATION - EXIST. RETAINING WALL

NOTES:

1. See Roadway Plans for Curb and Gutter and Pavement Removal and Replacement Limits.
2. Cost of Chain Link Fence Removal Included with Removal of Existing Structures or Concrete Removal as appropriate.
3. Existing vertical reinforcement bars shall be cleaned, straightened, and incorporated into new construction. Horizontal reinforcement bars shall be removed. Cost included with "Concrete Removal."
4. Existing vertical reinforcement can be cut-off at removal line.
5. See Roadway Plans for payment of excavations, not included in structure excavation.
6. Contractor only has to remove portion of existing stem and footing in conflict with proposed wall and pavement construction.
7. No structure excavation paid over limits of Removal of Existing Structure.
8. Contractor shall maintain existing wall underdrain to remain and cap end as necessary.
9. See Sheet 8 for Temporary Soil Retention Details.
10. Where existing stem and footing are not to be entirely removed, Contractor must still sufficiently remove piles marked for extraction.

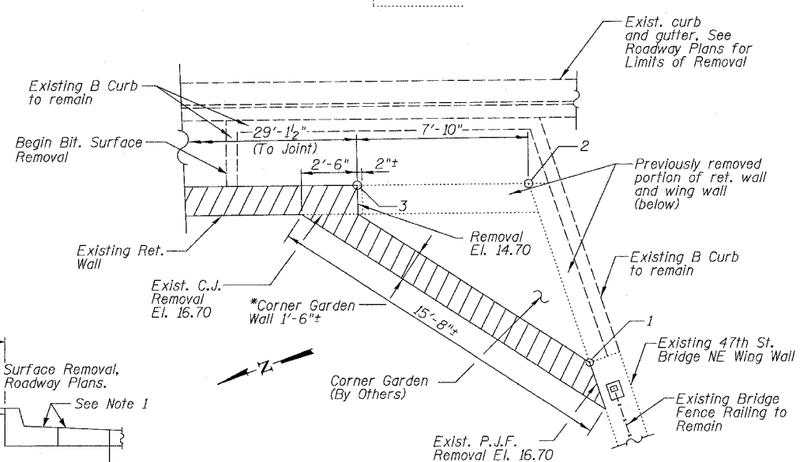

PLAN DETAIL - CORNER GARDEN

See Offset Sketch for Point Designations on Sheet 8

*Remove any fencing attached to Wall, cost Included with Concrete Removal.

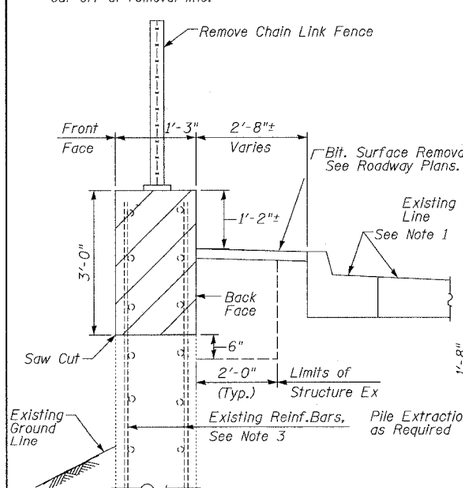

SECTION A-A

(Looking North)

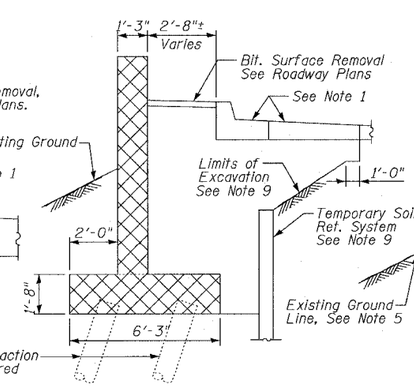

SECTION B-B

(Looking North)

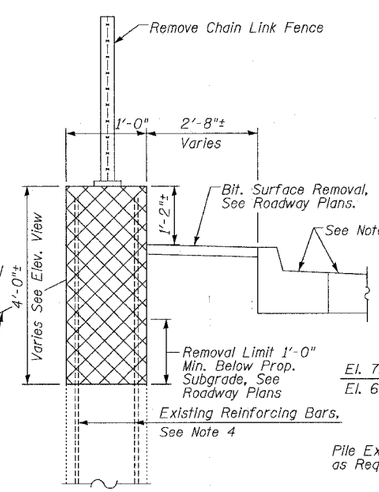

SECTION C-C

(Looking North)

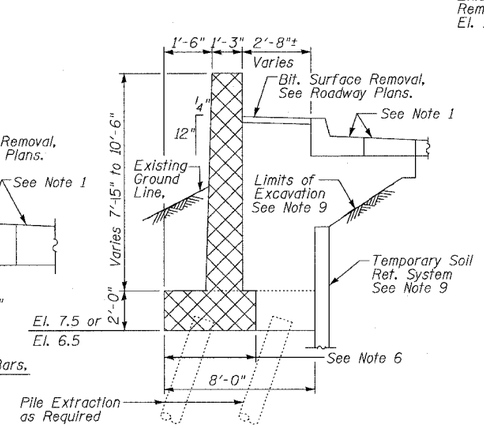

SECTION D-D

(Looking North)

BILL OF MATERIAL

Item	Unit	Quantity
Removal of Existing Structures	Each	1
Concrete Removal	Cu. Yd.	18
Structure Excavation	Cu. Yd.	101
Pile Extraction	Each	120

SHEET 3 OF 24

REVISIONS	
NAME	DATE
ADDENDUM 2	8/04/06

ILLINOIS DEPARTMENT OF TRANSPORTATION

F.A.I. 94/90 (DAN RYAN EXPRESSWAY)
GARFIELD BLVD TO 31ST STREET (NB LOCAL LANES)
COOK COUNTY
STA. 4529+75.90 TO STA. 4537+30.74
RETAINING WALL N-47N-R
REMOVAL PLAN & DETAILS
S.N. 016-W977

SCALE: NTS
DATE: JUNE 9, 2006
DRAWN BY: MTR
CHECKED BY: BLU

BOWMAN, BARRETT & ASSOCIATES INC.
CONSULTING ENGINEERS
Chicago, Illinois
312.228.0100
www.bbandainc.com

N:\660\cadd\dgn\NB\RETAINING WALLS\660_BSRTDEX_E14.dgn
8/10/2006 3:18:41 PM

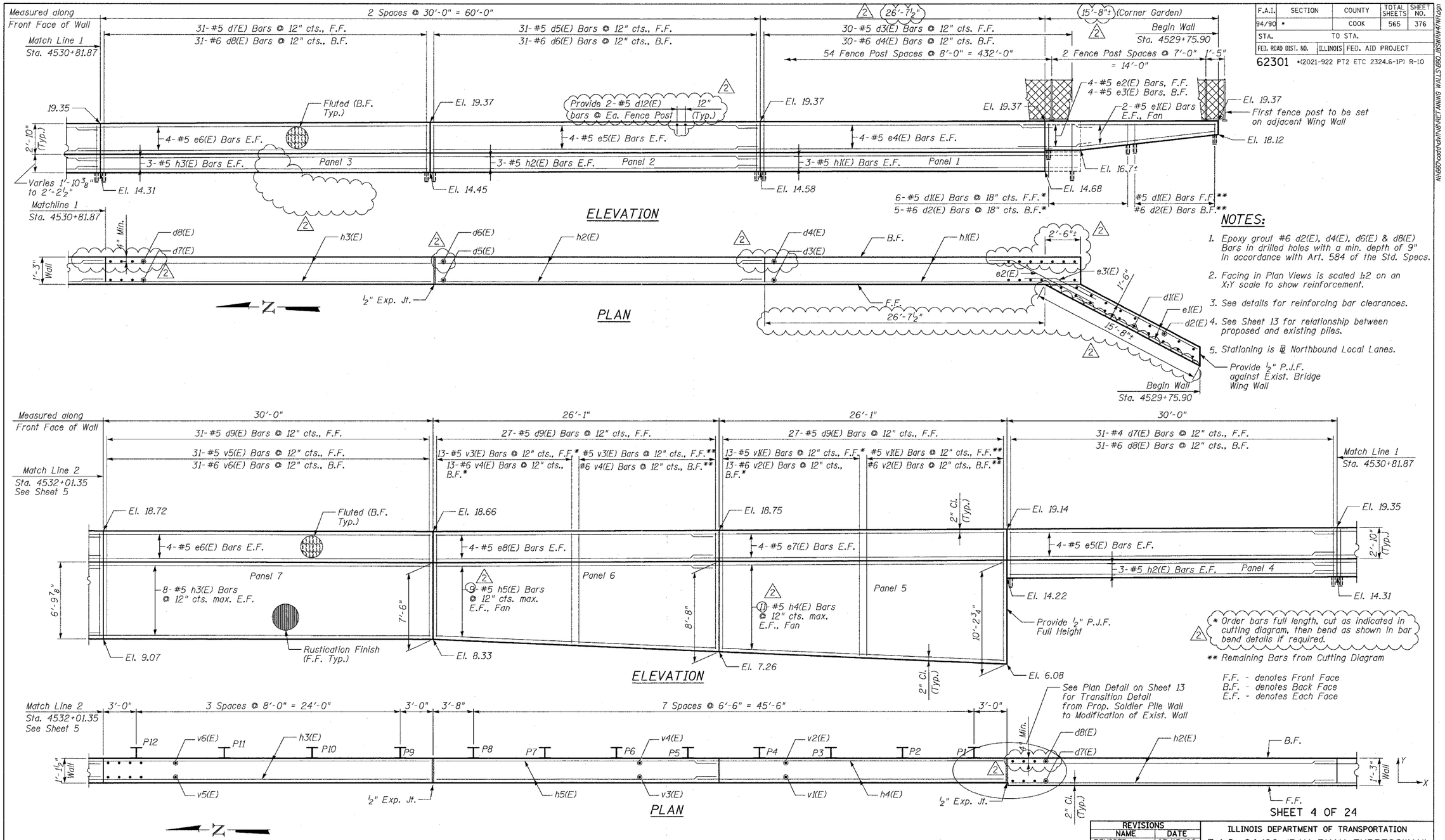

F.A.I.	SECTION	COUNTY	TOTAL SHEETS	SHEET NO.
94/90	*	COOK	565	376
STA.		TO STA.		
FED. ROAD DIST. NO.	ILLINOIS	FED. AID PROJECT		

62301 *(2021-922 PT2 ETC 2324.6-1P) R-10

NOTES:

1. Epoxy grout #6 d2(E), d4(E), d6(E) & d8(E) Bars in drilled holes with a min. depth of 9" in accordance with Art. 584 of the Std. Specs.
2. Facing in Plan Views is scaled 1:2 on an X:Y scale to show reinforcement.
3. See details for reinforcing bar clearances.
4. See Sheet 13 for relationship between proposed and existing piles.
5. Stationing is ℄ Northbound Local Lanes.

SHEET 4 OF 24

REVISIONS	
NAME	DATE
REVISED	07/13/06
ADDENDUM 2	8/04/06

ILLINOIS DEPARTMENT OF TRANSPORTATION

F.A.I. 94/90 (DAN RYAN EXPRESSWAY)
GARFIELD BLVD TO 31ST STREET (NB LOCAL LANES)
COOK COUNTY
STA. 4529+75.90 TO STA. 4537+30.74
RETAINING WALL N-47N-R
WALL DETAILS 1
S.N. 016-W977

SCALE: NTS DRAWN BY: MTR
DATE: JUNE 9, 2006 CHECKED BY: BLU

BOWMAN, BARRETT & ASSOCIATES INC.
CONSULTING ENGINEERS
Chicago, Illinois
312.228.0100
www.bbandainc.com

N:\960\ccdd\dgn\STRUCTURAL\WALLS\960S-W977-R1.dgn 8/10/2006 3:59:16 PM

F.A.I.	SECTION	COUNTY	TOTAL SHEETS	SHEET NO.
94/90	*	COOK	565	378
STA.		TO STA.		
FED. ROAD DIST. NO.	ILLINOIS	FED. AID PROJECT		

62301 *(2021-922 PT2 ETC 2324.6-1P) R-10

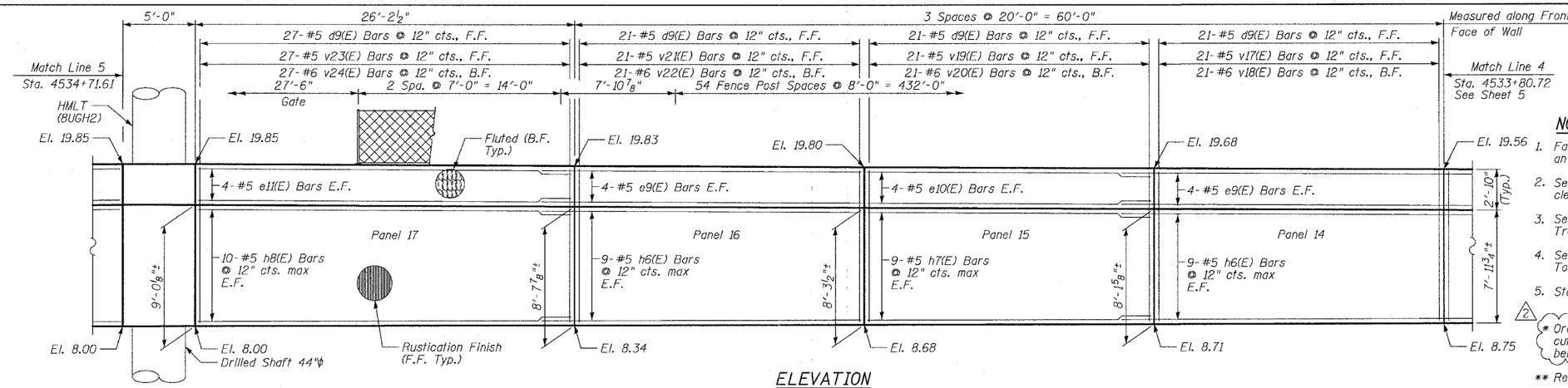

ELEVATION

NOTES:

1. Facing in Plan Views is scaled 1:2 on an X:Y scale to show reinforcement.
2. See details for reinforcing bar clearances.
3. See Sheet 15 for Parapet Reinforcing Transition Detail.
4. See Sheets 10 & 11 for High Mast Light Tower Details.
5. Stationing is ℄ Northbound Local Lanes

2 * Order bars full length, cut as indicated in cutting diagram, then bend as shown in bar bend details if required.

** Remaining Bars from Cutting Diagram

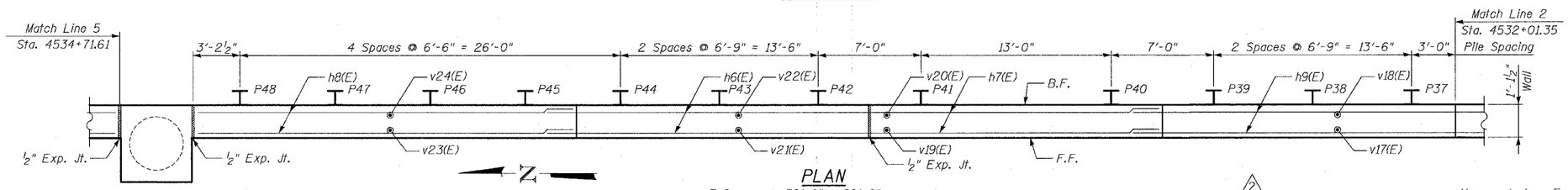

PLAN

F.F. - denotes Front Face
B.F. - denotes Back Face
E.F. - denotes Each Face

MIN BAR LAP

#5 - 2'-2"
#6 - 2'-7"

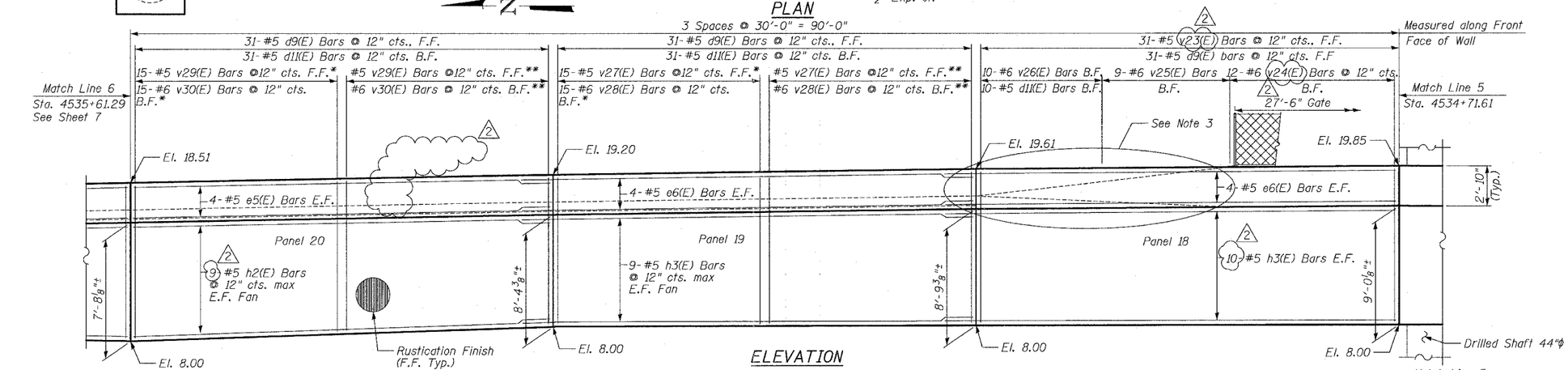

ELEVATION

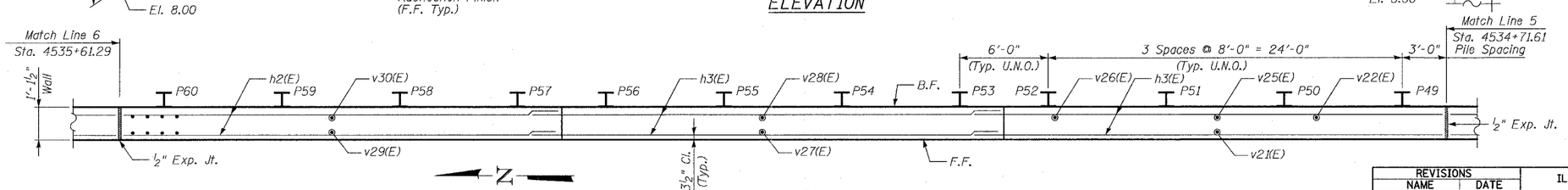

PLAN

REVISIONS	
NAME	DATE
REVISED	07/13/06
ADDENDUM 2	8/04/06

SHEET 6 OF 24

ILLINOIS DEPARTMENT OF TRANSPORTATION

F.A.I. 94/90 (DAN RYAN EXPRESSWAY)
GARFIELD BLVD TO 31ST STREET (NB LOCAL LANES)
COOK COUNTY
STA. 4529+75.90 TO STA. 4537+30.74
RETAINING WALL N-47N-R
WALL DETAILS 3
S.N. 016-W977

SCALE: NTS DRAWN BY: MTR
DATE: JUNE 9, 2006 CHECKED BY: BLU

BOWMAN, BARRETT & ASSOCIATES INC.
CONSULTING ENGINEERS
Chicago, Illinois
312.228.0100
www.bbandainc.com

N:\660\cadd\CNT\RETAINING WALLS\660L18SWr47NR_02.dgn
8/10/2006 3:49:43 PM

F.A.I.	SECTION	COUNTY	TOTAL SHEETS	SHEET NO.
94/90	*	COOK	565	379
STA.		TO STA.		
FED. ROAD DIST. NO.	ILLINOIS	FED. AID PROJECT		

62301 *(2021-922 PT2 ETC 2324.6-1P) R-10

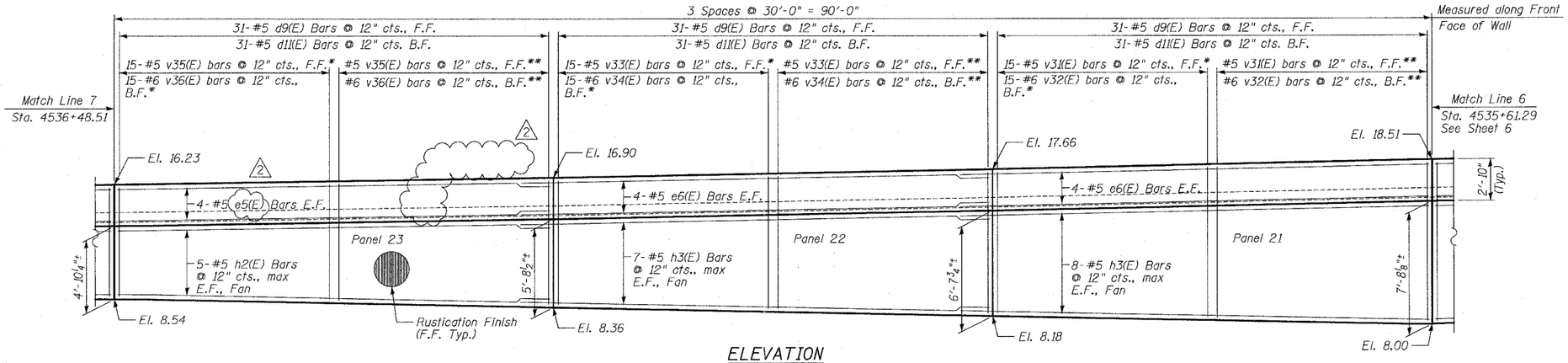

ELEVATION

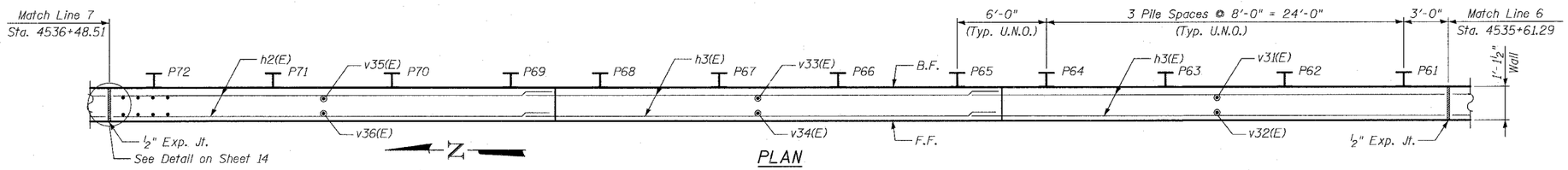

PLAN

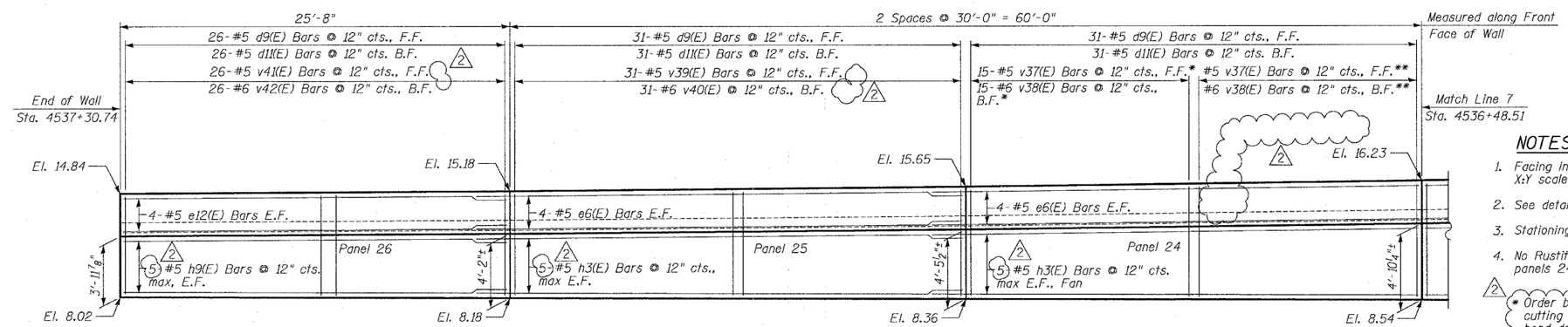

ELEVATION

NOTES:

1. Facing in Plan Views is scaled 1:2 on an X:Y scale to show reinforcement.
2. See details for reinforcing bar clearances.
3. Stationing is @ Northbound Local Lanes
4. No Rustification Finish on Front Face of panels 24, 25, & 26.

2 * Order bars full length, cut as indicated in cutting diagram, then bend as shown in bar bend details if required.

** Remaining Bars from Cutting Diagram

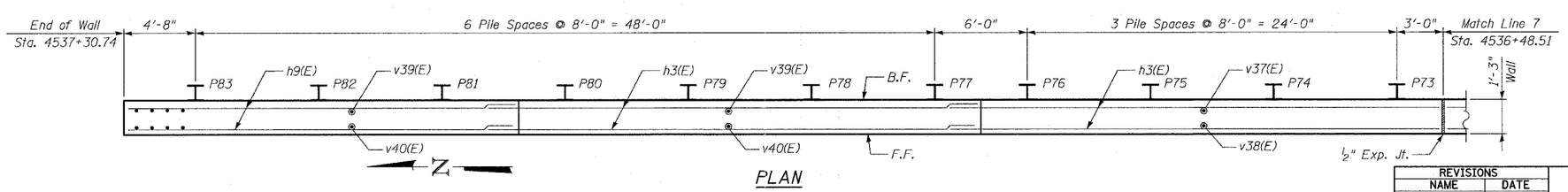

PLAN

MIN BAR LAP

#5 - 2'-2"
#6 - 2'-7"

SHEET 7 OF 24

REVISIONS	
NAME	DATE
REVISED	07/13/06
ADDENDUM 2	8/04/06

2

ILLINOIS DEPARTMENT OF TRANSPORTATION

F.A.I. 94/90 (DAN RYAN EXPRESSWAY)
GARFIELD BLVD TO 31ST STREET (NB LOCAL LANES)
COOK COUNTY
STA. 4529+75.90 TO STA. 4537+30.74
RETAINING WALL N-47N-R
WALL DETAILS 4
S.N. 016-W977

SCALE: NTS DRAWN BY: MTR
DATE: JUNE 9, 2006 CHECKED BY: BLU

BOWMAN, BARRETT & ASSOCIATES INC.
CONSULTING ENGINEERS
Chicago, Illinois
312.228.0100
www.bbandainc.com

N:\660\cadd\cfl\NBRET AINING WALLS\660_IBSwr14FNR_03.dgn
8/10/2006 3:20:14 PM

F.A.I.	SECTION	COUNTY	TOTAL SHEETS	SHEET NO.
94/90	*	COOK	565	380
STA.		TO STA.		
FED. ROAD DIST. NO.	ILLINOIS	FED. AID PROJECT		

62301 *(2021-922 PT2 ETC 2324.6-1P) R-10

PILE LAYOUT

Pile		Offset (Ft.)	Top of Wall El.	Top of Pile Elevation	Bott. of Facing Elevation	Section	Pile Tip Elevation	Pile Length (Ft.)
P-1	From N.B. Local	88.47	16.26	15.26	6.32	W24x68	-12.35	27.61
P-2		88.80	16.16	15.16	6.52	W24x68	-12.35	27.51
P-3		89.13	16.07	15.07	6.71	W24x68	-12.35	27.41
P-4		89.46	15.97	14.97	6.91	W24x68	-12.35	27.31
P-5		89.74	15.90	14.90	7.48	W24x68	-11.17	26.07
P-6		89.95	15.88	14.88	7.65	W24x68	-11.17	26.05
P-7		90.16	15.86	14.86	7.83	W24x68	-11.17	26.03
P-8		90.37	15.84	14.84	8.01	W24x68	-11.17	26.01
P-9		90.30	15.84	14.84	8.48	W24x76	-11.10	25.94
P-10		89.77	15.85	14.85	8.60	W24x76	-11.10	25.95
P-11		89.24	15.87	14.87	8.72	W24x76	-11.10	25.97
P-12		88.71	15.88	14.88	8.85	W24x76	-11.10	25.99
P-13		88.22	15.89	14.89	9.06	W24x68	-10.16	25.04
P-14		87.56	15.89	14.89	9.06	W24x68	-10.16	25.04
P-15		86.90	15.88	14.88	9.05	W24x68	-10.16	25.04
P-16		86.23	15.88	14.88	9.04	W24x68	-10.16	25.04
P-17		85.73	15.89	14.89	9.02	W24x68	-10.21	25.11
P-18		85.06	15.94	14.94	9.01	W24x68	-10.21	25.15
P-19		84.39	15.98	14.98	9.00	W24x68	-10.21	25.19
P-20		83.72	16.02	15.02	8.99	W24x68	-10.21	25.23
P-21		83.21	16.05	15.05	8.97	W24x68	-10.27	25.32
P-22		82.54	16.09	15.09	8.96	W24x68	-10.27	25.36
P-23		81.87	16.13	15.13	8.95	W24x68	-10.27	25.40
P-24		81.20	16.17	15.17	8.94	W24x68	-10.27	25.44
P-25		80.69	16.20	15.20	8.91	W24x68	-10.23	25.43
P-26		80.02	16.25	15.25	8.90	W24x68	-10.23	25.48
P-27		79.35	16.30	15.30	8.89	W24x68	-10.23	25.53
P-28		78.68	16.35	15.35	8.88	W24x68	-10.23	25.58
P-29	From Ramp 47B	-20.51	16.38	15.38	8.85	W24x68	-10.34	25.73
P-30		-20.51	16.43	15.43	8.84	W24x68	-10.34	25.77
P-31		-20.51	16.48	15.48	8.83	W24x68	-10.34	25.82
P-32		-20.51	16.53	15.53	8.82	W24x68	-10.34	25.87
P-33		-20.51	16.57	15.57	8.80	W24x68	-10.40	25.96
P-34		-20.51	16.61	15.61	8.79	W24x68	-10.40	26.01
P-35		-20.51	16.66	15.66	8.78	W24x68	-10.40	26.06
P-36		-20.51	16.71	15.71	8.77	W24x68	-10.40	26.11
P-37		-20.51	16.75	15.75	8.74	W24x68	-12.59	28.33
P-38		-20.51	16.79	15.79	8.73	W24x68	-12.59	28.37
P-39		-20.51	16.83	15.83	8.72	W24x68	-12.59	28.41
P-40		-20.36	16.87	15.87	8.70	W27x114	-16.35	32.22
P-41		-20.36	16.95	15.95	8.69	W27x114	-16.35	32.30
P-42		-20.51	16.99	15.99	8.67	W24x68	-12.66	28.65
P-43		-20.51	17.03	16.03	8.66	W24x68	-12.66	28.69
P-44		-20.51	17.07	16.07	8.65	W24x68	-12.66	28.73
P-45		-20.51	17.08	16.08	8.63	W24x68	-12.71	28.79
P-46		-20.51	17.06	16.06	8.62	W24x68	-12.71	28.77
P-47		-20.51	17.04	16.04	8.61	W24x68	-12.71	28.75
P-48		-20.51	17.02	16.02	8.60	W24x68	-12.71	28.73
P-49		-20.50	16.97	15.97	8.57	W24x76	-13.48	29.45
P-50		-20.50	16.91	15.91	8.56	W24x76	-13.48	29.39
P-51		-20.50	16.86	15.86	8.55	W24x76	-13.48	29.33
P-52		-20.50	16.80	15.80	8.54	W24x76	-13.48	29.28
P-53		-20.50	16.74	15.74	8.51	W24x76	-13.53	29.27
P-54		-20.50	16.63	15.63	8.50	W24x76	-13.53	29.16
P-55		-20.50	16.52	15.52	8.49	W24x76	-13.53	29.05
P-56		-20.50	16.41	15.41	8.48	W24x76	-13.53	28.94
P-57		-20.51	16.30	15.30	8.46	W24x68	-11.38	26.68
P-58		-20.51	16.11	15.11	8.45	W24x68	-11.38	26.49
P-59		-20.51	15.93	14.93	8.44	W24x68	-11.38	26.31
P-60		-20.51	15.74	14.74	8.43	W24x68	-11.38	26.12

PILE LAYOUT

Pile		Offset (Ft.)	Top of Wall El.	Top of Pile Elevation	Bott. of Facing Elevation	Section	Pile Tip Elevation	Pile Length (Ft.)
P-61	From Ramp 47B	-20.51	15.59	14.59	8.41	W24x68	-11.40	25.99
P-62		-20.51	15.36	14.36	8.40	W24x68	-11.40	25.76
P-63		-20.51	15.13	14.13	8.40	W24x68	-11.40	25.53
P-64		-20.51	14.90	13.90	8.40	W24x68	-11.40	25.30
P-65		-20.51	14.75	13.75	8.41	W24x68	-11.40	25.15
P-66		-20.51	14.55	13.55	8.42	W24x68	-11.40	24.95
P-67		-20.51	14.35	13.35	8.43	W24x68	-11.40	24.74
P-68		-20.51	14.14	13.14	8.45	W24x68	-11.40	24.54
P-69		-20.51	14.00	13.00	8.62	W24x68	-10.86	23.86
P-70		-20.51	13.82	12.82	8.74	W24x68	-10.86	23.68
P-71		-20.51	13.64	12.64	8.87	W24x68	-10.86	23.50
P-72		-20.51	13.46	12.46	9.00	W24x68	-10.86	23.32
P-73		-20.51	13.34	12.34	9.13	W24x68	-10.11	22.45
P-74		-20.51	13.18	12.18	9.06	W24x68	-10.11	22.29
P-75		-20.51	13.03	12.03	8.98	W24x68	-10.11	22.14
P-76		-20.51	12.88	11.88	8.91	W24x68	-10.11	21.99
P-77		-20.51	12.77	11.77	8.67	W24x68	-9.42	21.19
P-78		-20.51	12.65	11.65	8.59	W24x68	-9.42	21.07
P-79		-20.51	12.52	11.52	8.51	W24x68	-9.42	20.94
P-80		-20.51	12.40	11.40	8.43	W24x68	-9.42	20.82
P-81		-20.51	12.28	11.28	8.21	W24x68	-8.98	20.26
P-82		-20.51	12.14	11.14	8.15	W24x68	-8.98	20.12
P-83		-20.51	12.02	11.02	8.08	W24x68	-8.98	19.99

OFFSET TABLE

PT.	Station	Offset
1	211+27.35	17.12
2	211+29.26	10.51
3	211+37.31	10.00
4	211+65.75	10.18
5	211+95.23	10.33
6	212+24.71	10.48
7	212+54.39	10.58
8	212+80.55	10.63
9	213+06.61	10.68
10	213+36.55	13.14
11	213+66.46	15.59
12	213+96.35	18.05
13	214+26.25	20.50
14	214+56.15	22.95

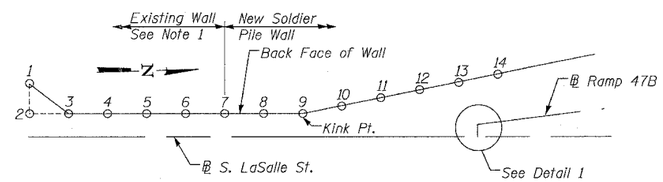

OFFSET SKETCH

Points Shown are Wall Joints.
Build Wall Parallel to Ramp 47B ℄ & at Constant Offset Beyond Pt. 14 U.N.O.

1. Utilize Back Face of existing wall as W.P. for top modification.

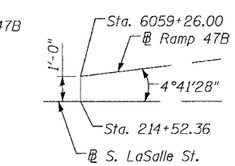

DETAIL 1

NOTES

1. All piles have drilled shaft dia = 3'-0".

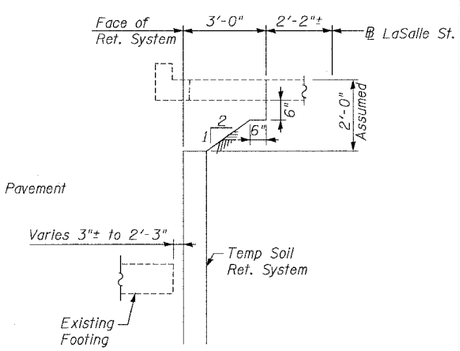

SECTION X-X

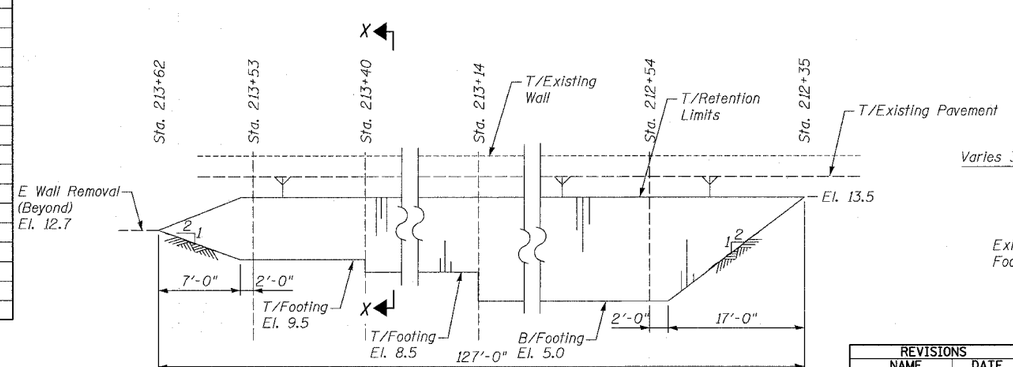

TEMPORARY SOIL RETENTION SYSTEM

A cantilevered sheet piling design does not appear feasible and additional members or other retention systems may be necessary. The Contractor shall submit a temporary soil retention system design including plan details and calculations for review and acceptance by the Engineer.

BILL OF MATERIAL

Item	Unit	Quantity
Furnishing Soldier Piles (W Sections)	Foot	2,150
Drilling and Setting Soldier Piles (In Soil)	Cu. Ft.	12,579

2

REVISIONS	
NAME	DATE
REVISED	6/15/06
REVISED	07/13/06
ADDENDUM 2	8/04/06

2

SHEET 8 OF 24

ILLINOIS DEPARTMENT OF TRANSPORTATION

F.A.I. 94/90 (DAN RYAN EXPRESSWAY)
GARFIELD BLVD TO 31ST STREET (NB LOCAL LANES)
COOK COUNTY
STA. 4529+75.90 TO STA. 4537+30.74
RETAINING WALL N-47N-R
PILE LAYOUT & TEMP. SOIL RET. SYSTEM
S.N. 016-W977

SCALE: NTS DRAWN BY: MTR
DATE: JUNE 9, 2006 CHECKED BY: BLU

BOWMAN, BARRETT & ASSOCIATES INC.
CONSULTING ENGINEERS
Chicago, Illinois
312.228.0100
www.bbandainc.com

N:\660\add\chi\hi\94-NET-ANING WALLS\660_I85PLM4\hr4.dgn
8/10/2006 3:20:57 PM

F.A.I.	SECTION	COUNTY	TOTAL SHEETS	SHEET NO.
94/90	*	COOK	565	381
STA.		TO STA.		
FED. ROAD DIST. NO.	ILLINOIS	FED. AID PROJECT		

62301 *(2021-922 PT2 ETC 2324.6-1P) R-10

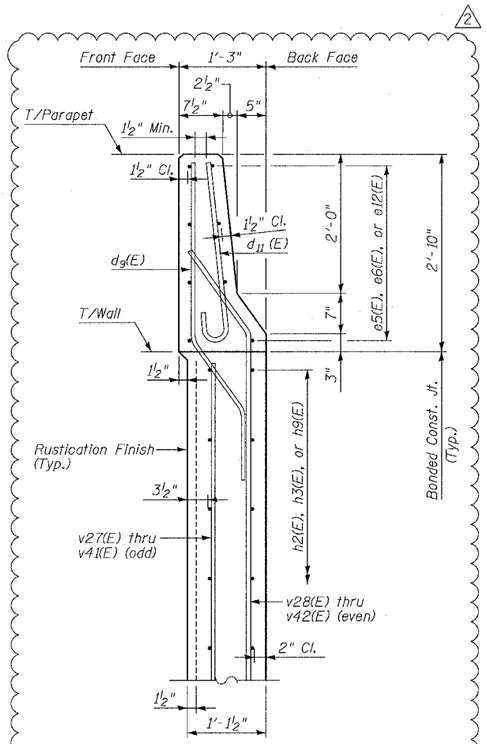

SECTION THRU
F-SHAPE PARAPET

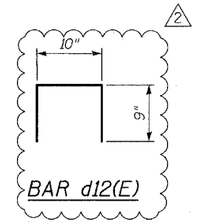

BAR d12(E)

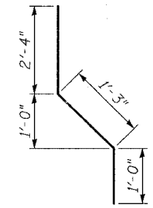

BAR d9(E)

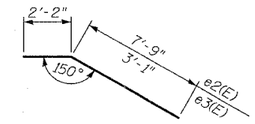

BARS e2(E) & e3(E)

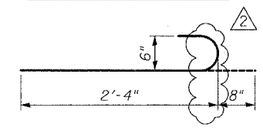

BAR d11(E)

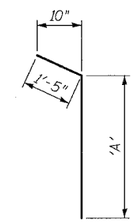

BARS v26, v40(E) & v42(E)

Bar	'A'
v26(E)	8'-9"
v40(E)	4'-1"
v42(E)	3'-11"

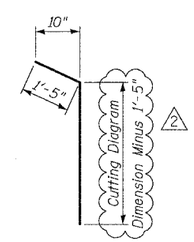

**BARS v28(E), v30(E), v32(E), v34(E), v36(E) & v38(E)

** Cut bars v28(E), v30(E), v32(E), v34(E), v36(E), & v38(E) according to Cutting Diagram, then bend according to Bar Bend Detail.

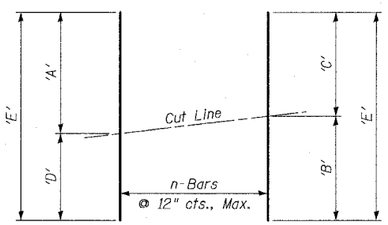

* BAR CUTTING DIAGRAM

* Order bars d1(E), d2(E), v1(E) thru v4(E) and v27(E), v29(E), v31(E), v33(E), v35(E) and v37(E) fulll length, cut as shown and use remainder where indicated.

TABLE OF DIMENSIONS

Bar	'A'	'B'	'C'	'D'	'E'	n
d1(E)	2'-4"	1'-8"	1'-7"	11"	3'-3"	6
d2(E)	3'-4"	2'-8"	2'-6"	1'-10"	5'-2"	5
v1(E)	9'-10"	9'-2"	9'-0"	8'-4"	18'-2"	13
v2(E)	12'-8"	12'-0"	11'-10"	11'-2"	23'-10"	13
v3(E)	8'-4"	7'-9"	7'-9"	7'-2"	15'-6"	13
v4(E)	11'-2"	10'-7"	10'-7"	10'-0"	21'-2"	13
v27(E)	8'-5"	8'-3"	8'-2"	8'-0"	16'-5"	15
v28(E)	10'-1"	9'-11"	9'-10"	9'-8"	19'-9"	15
v29(E)	8'-0"	7'-8"	7'-8"	7'-4"	15'-4"	15
v30(E)	9'-8"	9'-4"	9'-4"	9'-0"	18'-8"	15
v31(E)	7'-4"	6'-10"	6'-10"	6'-4"	13'-8"	15
v32(E)	9'-0"	8'-6"	8'-6"	8'-0"	17'-0"	15
v33(E)	6'-4"	5'-11"	5'-10"	5'-5"	11'-9"	15
v34(E)	8'-0"	7'-7"	7'-6"	7'-1"	15'-1"	15
v35(E)	5'-5"	5'-0"	4'-11"	4'-6"	9'-11"	15
v36(E)	7'-1"	6'-8"	6'-7"	6'-2"	13'-3"	15
v37(E)	4'-6"	4'-4"	4'-3"	4'-1"	8'-7"	15
v38(E)	6'-2"	6'-0"	6'-0"	5'-10"	12'-0"	15

BILL OF MATERIAL

	Bar	No.	Size	Length	Shape
*	d1(E)	6	#5	3'-3"	
*	d2(E)	5	#6	5'-2"	
	d3(E)	30	#5	4'-5"	
	d4(E)	30	#6	5'-4"	
	d5(E)	31	#5	4'-6"	
	d6(E)	31	#6	5'-5"	
	d7(E)	62	#5	4'-7"	
	d8(E)	62	#6	5'-6"	
	d9(E)	635	#5	4'-7"	
	d10(E)	9	#6	5'-5"	
	d11(E)	253	#6	3'-0"	
	d12(E)	128	#5	2'-4"	
	e1(E)	4	#5	11'-6"	
	e2(E)	4	#5	9'-11"	
	e3(E)	4	#5	5'-3"	
	e4(E)	8	#5	31'-1½"	
	e5(E)	48	#5	29'-8"	
	e6(E)	96	#5	32'-2"	
	e7(E)	8	#5	28'-3"	
	e8(E)	8	#5	25'-9"	
	e9(E)	16	#5	22'-2"	
	e10(E)	8	#5	19'-8"	
	e11(E)	8	#5	25'-10"	
	e12(E)	8	#5	25'-4"	
	h1(E)	6	#5	31'-4"	
	h2(E)	74	#5	29'-8"	
	h3(E)	176	#5	32'-2"	
	h4(E)	22	#5	28'-3"	
	h5(E)	18	#5	25'-9"	
	h6(E)	36	#5	22'-2"	
	h7(E)	18	#5	19'-8"	
	h8(E)	20	#5	25'-10"	
	h9(E)	10	#5	25'-4"	
*	v1(E)	13	#5	18'-2"	
*	v2(E)	13	#6	23'-10"	
*	v3(E)	13	#5	15'-6"	
*	v4(E)	13	#6	21'-2"	
	v5(E)	62	#5	6'-7"	
	v6(E)	62	#6	9'-5"	
	v7(E)	31	#5	6'-6"	
	v8(E)	31	#6	9'-4"	
	v9(E)	31	#5	6'-10"	
	v10(E)	31	#6	9'-8"	
	v11(E)	31	#5	7'-0"	
	v12(E)	31	#6	9'-10"	
	v13(E)	31	#5	7'-3"	
	v14(E)	31	#6	10'-1"	
	v15(E)	31	#5	7'-6"	
	v16(E)	31	#6	10'-4"	
	v17(E)	21	#5	7'-8"	
	v18(E)	21	#6	10'-6"	

	Bar	No.	Size	Length	Shape
	v19(E)	21	#5	7'-10"	
	v20(E)	21	#6	10'-8"	
	v21(E)	21	#5	8'-0"	
	v22(E)	21	#6	10'-10"	
	v23(E)	58	#5	8'-4"	
	v24(E)	39	#6	11'-2"	
	v25(E)	9	#6	8'-7"	
	v26(E)	10	#6	10'-2"	
*	v27(E)	15	#5	16'-5"	
**	v28(E)	15	#6	19'-9"	
*	v29(E)	15	#5	15'-4"	
**	v30(E)	15	#6	18'-8"	
*	v31(E)	15	#5	13'-8"	
**	v32(E)	15	#6	17'-0"	
*	v33(E)	15	#5	11'-9"	
**	v34(E)	15	#6	15'-1"	
*	v35(E)	15	#5	9'-11"	
**	v36(E)	15	#6	13'-3"	
*	v37(E)	15	#5	8'-7"	
**	v38(E)	15	#6	12'-0"	
	v39(E)	31	#5	3'-10"	
	v40(E)	31	#6	5'-6"	
	v41(E)	26	#5	3'-8"	
	v42(E)	26	#6	5'-4"	

Reinforcement Bars, Epoxy Coated	Pound	36,920
Concrete Structures	Cu. Yd.	188.8
Concrete Superstructure	Cu. Yd.	85.6
Chain Link Fence, 42" Attached to Structure (Special)	Foot	470
Chain Link Gate Assembly (Special)	Each	1
Rustication Finish	Sq. Ft.	4,352
Protective Coat	Sq. Yd.	686

SHEET 9 OF 24

REVISIONS	
NAME	DATE
ADDENDUM 2	8/04/06

ILLINOIS DEPARTMENT OF TRANSPORTATION
F.A.I. 94/90 (DAN RYAN EXPRESSWAY)
GARFIELD BLVD TO 31ST STREET (NB LOCAL LANES)
COOK COUNTY
STA. 4529+75.90 TO STA. 4537+30.74
RETAINING WALL N-47N-R
BILL OF MATERIAL
S.N. 016-W977

SCALE: NTS DRAWN BY: MTR
DATE: JUNE 9, 2006 CHECKED BY: BLU

BOWMAN, BARRETT & ASSOCIATES INC.
CONSULTING ENGINEERS
Chicago, Illinois
312.228.0100
www.bbandsinc.com

N:\560\cadd\dgn\NRWRET AINING WALLS\560_IBSwr14FNR_04.dgn
8/10/2006 3:26:35 PM

F.A.I.	SECTION	COUNTY	TOTAL SHEETS	SHEET NO.
94/90	*	COOK	565	385
STA.		TO STA.		
FED. ROAD DIST. NO.	ILLINOIS	FED. AID PROJECT		

62301 *(2021-922 PT2 ETC 2324.6-1P) R-10

N:\660cadd\dki\N6\RETAINING WALLS\660_JBSTDM47NR.dgn

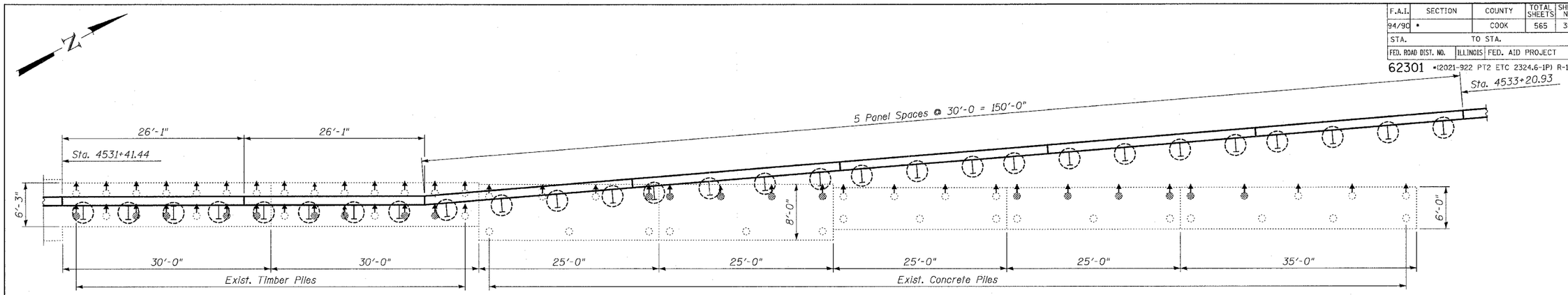

PILE EXTRACTION LAYOUT

LEGEND:

- Existing Pile to be Extracted
- Existing Pile to Remain
- Indicates 3" in 12" Batter Pile
- Proposed Soldier Pile Encasement

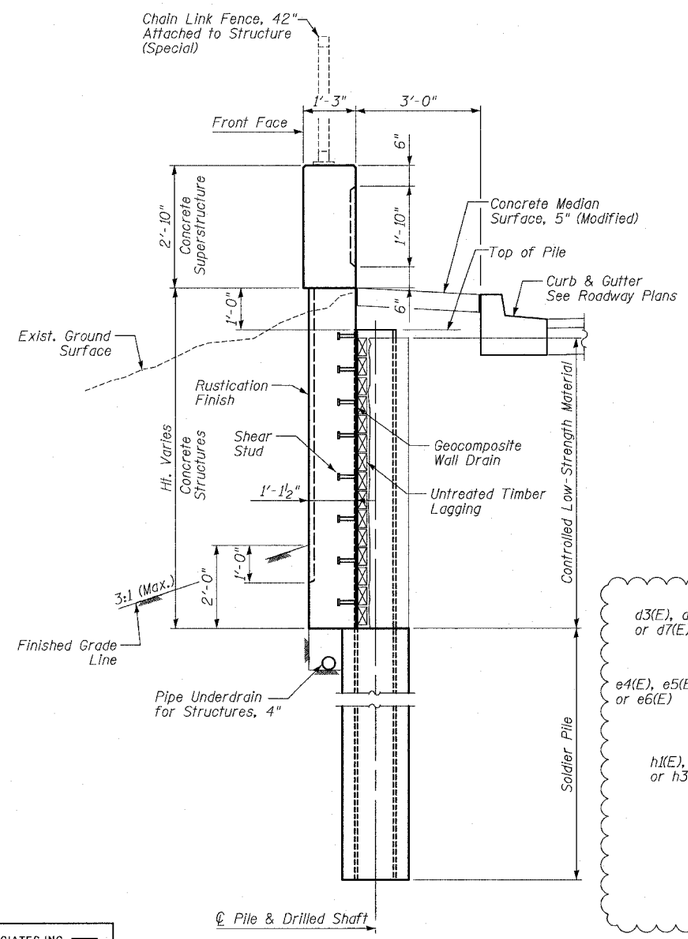

TYP. SECTION THRU PROPOSED WALL

See Sheet 12 for Modifications to this Section

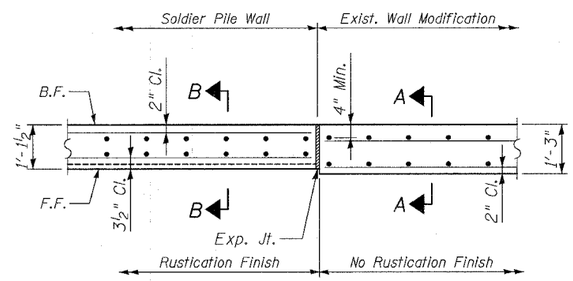

PLAN DETAIL

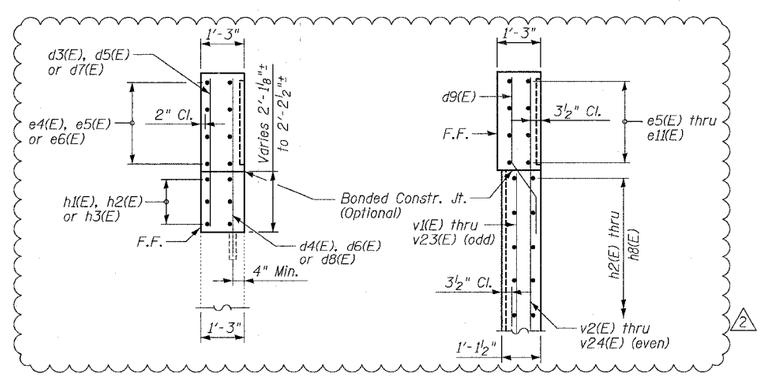

SECTION A-A

SECTION B-B

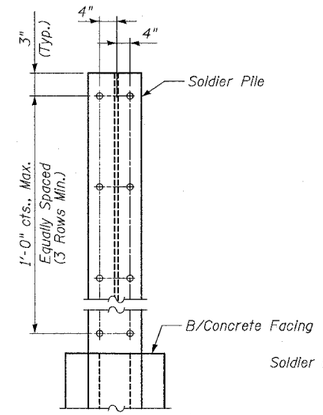

SHEAR STUD CONNECTOR DETAIL

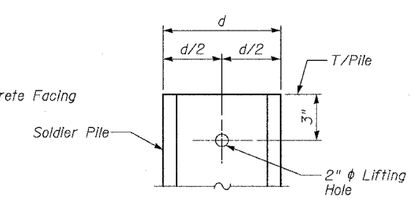

LIFTING HOLE DETAIL

SHEET 13 OF 24

REVISIONS	
NAME	DATE
REVISED	07/13/06
ADDENDUM 2	8/04/06

ILLINOIS DEPARTMENT OF TRANSPORTATION

F.A.I. 94/90 (DAN RYAN EXPRESSWAY)

GARFIELD BLVD TO 31ST STREET (NB LOCAL LANES)

COOK COUNTY

STA. 4529+75.90 TO STA. 4537+30.74

RETAINING WALL N-47N-R

TYPICAL SECTIONS & DETAILS

S.N. 016-W977

SCALE: NTS DRAWN BY: MTR

DATE: JUNE 9, 2006 CHECKED BY: BLU

BOWMAN, BARRETT & ASSOCIATES INC.
CONSULTING ENGINEERS
Chicago, Illinois
312.228.0100
www.bbandainc.com

8/10/2006 3:22:06 PM

F.A.I.	SECTION	COUNTY	TOTAL SHEETS	SHEET NO.
94/90 *		COOK	565	387
STA.		TO STA.		
FED. ROAD DIST. NO.	ILLINOIS	FED. AID PROJECT		

62301 *(2021-922 PT2 ETC 2324.6-IP) R-10

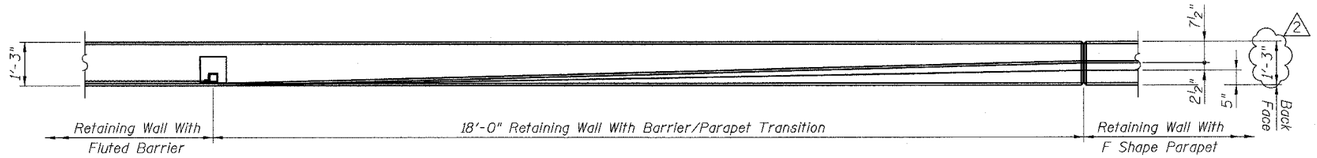

PLAN

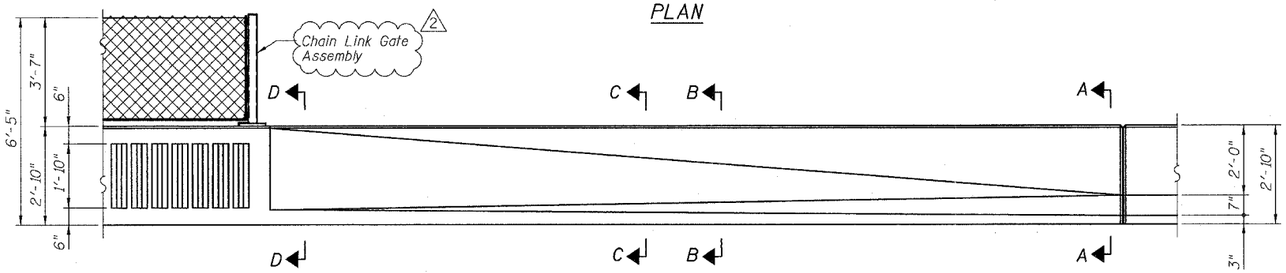

BACK FACE ELEVATION - TRANSITIONS

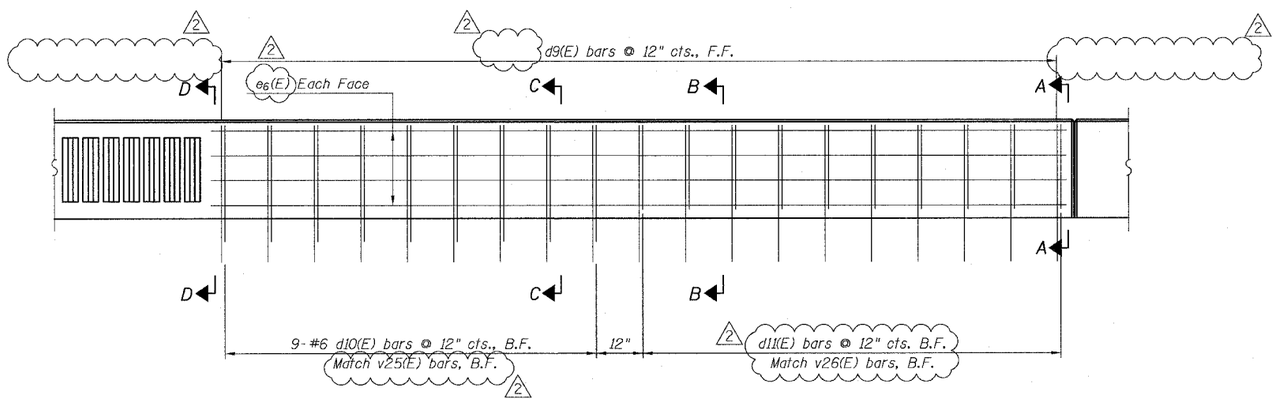

BACK FACE ELEVATION - REINFORCEMENT

(v bars not shown for clarity)

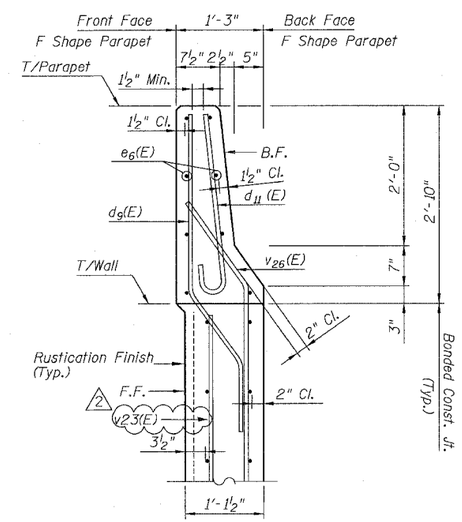

SECTION A-A

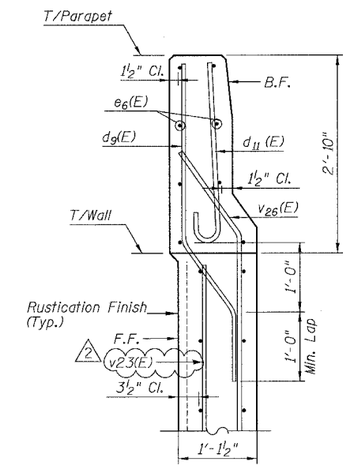

SECTION B-B

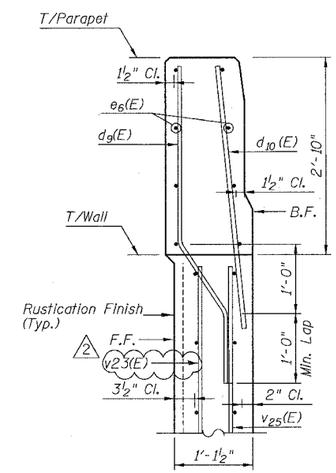

SECTION C-C

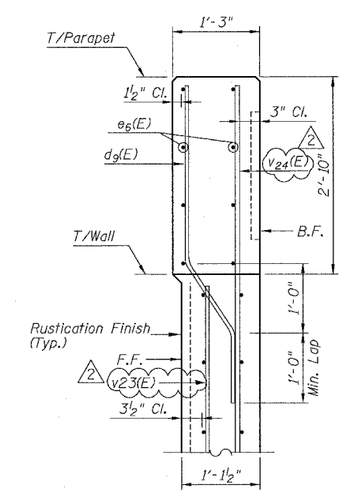

SECTION D-D

NOTES:

1. For Bill of Bars & Bar Bend Details, See Sheet 9 of 24.

REVISIONS		
	NAME	DATE
2	ADDENDUM 2	8/04/06

SHEET 15 OF 24

ILLINOIS DEPARTMENT OF TRANSPORTATION

F.A.I. 94/90 (DAN RYAN EXPRESSWAY)

GARFIELD BLVD TO 31ST STREET (NB LOCAL LANES)

COOK COUNTY

STA. 4529+75.90 TO STA. 4537+30.74

RETAINING WALL N-47N-R

PARAPET TRANSITION

S.N. 016-W977

SCALE: NTS — DRAWN BY: MTR

DATE: JUNE 9, 2006 — CHECKED BY: BLU

BOWMAN, BARRETT & ASSOCIATES INC.
CONSULTING ENGINEERS
Chicago, Illinois
312.228.0100
www.bbandainc.com

F.A.I.	SECTION	COUNTY	TOTAL SHEETS	SHEET NO.
94/90	*	COOK	565	397
STA.		TO STA.		
FED. ROAD DIST. NO.	ILLINOIS	FED. AID PROJECT		

62301 *(2021-922 PT2 ETC 2324.6-1P) R-10

Benchmark: BM No. 3539
"X" Cut on Easterly bolt of light pole base at the SE corner of 43rd St. and La Salle St.
El. 13.10

All elevations are based on the Chicago City Datum (C.C.D.)

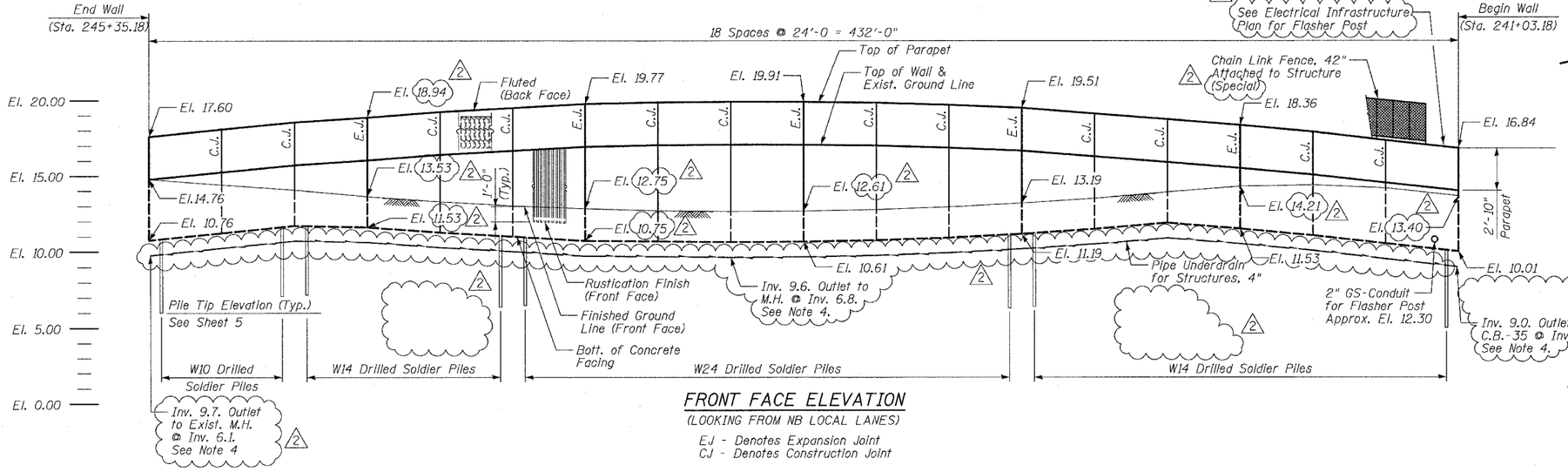

FRONT FACE ELEVATION

(LOOKING FROM NB LOCAL LANES)

EJ - Denotes Expansion Joint
CJ - Denotes Construction Joint

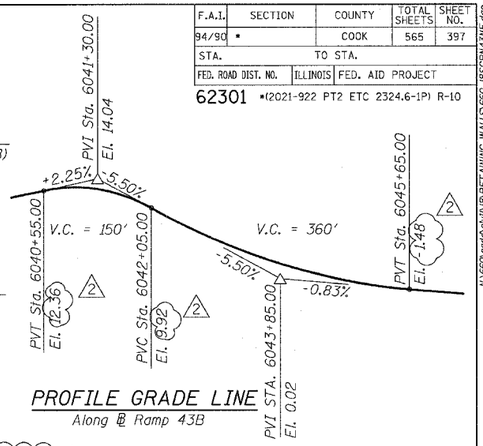

PROFILE GRADE LINE

Along ℄ Ramp 43B

TOTAL BILL OF MATERIAL

ITEM	UNIT	QTY
Porous Granular Embankment (Special)	Cu. Yd.	32
Structure Excavation	Cu. Yd.	98
Reinforcement Bars, Epoxy Coated	Pound	19,080
Concrete Structures	Cu. Yd.	88.3
Concrete Superstructure	Cu. Yd.	54.9
Protective Coat	Sq. Yd.	284
Rustication Finish	Sq. Ft.	2,371
Stud Shear Connector	Each	430
Untreated Timber Lagging	Sq. Ft.	1,776
Furnishing Soldier Piles (W Section)	Foot	1,315
Drilling and Setting Soldier Piles (In Soil)	Cu. Ft.	6,293
Geocomposite Wall Drain	Sq. Yd.	147
Pipe Underdrains for Structures, 4"	Foot	495
Chain Link Fence, 42" Attached to Structure (Special)	Foot	424

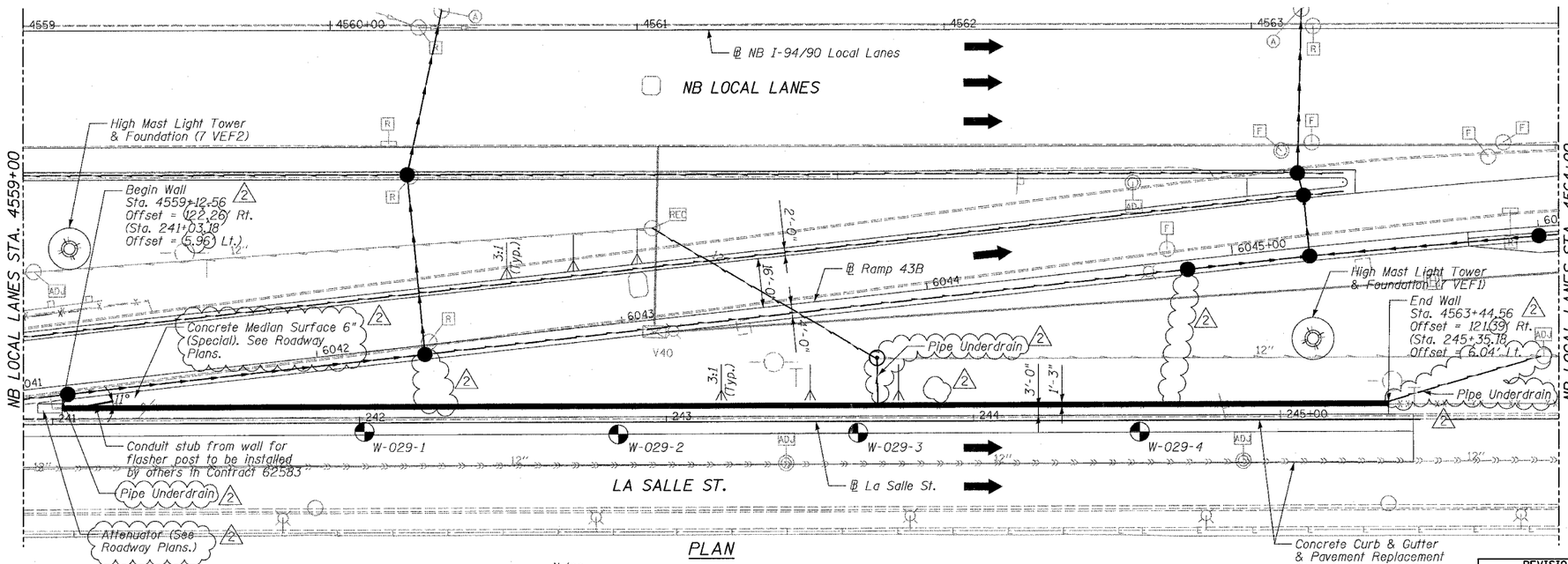

PLAN

LEGEND

- Soil Boring Location
- High Mast Lighting Foundation and Tower (See Notes)
- Proposed Drainage Structure
- Proposed Underdrain
- Proposed Storm Sewer

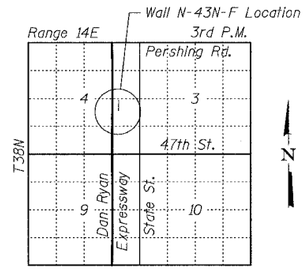

LOCATION SKETCH

SHEET 1 OF 9

DESIGN SPECIFICATIONS

2002 AASHTO

DESIGN STRESSES

FIELD UNITS

f'c = 3,500 psi
fy = 60,000 psi (Reinforcement)
fy = 36,000 psi (M270 Gr 36) Soldier Piles

Notes:

1. Offsets given to Front Face of Wall. Station and offsets in parentheses are along Frontage Road or ramp.
2. HMLT, foundations and work pads by others. See Special Provisions for Contractor Cooperation.
3. Min. Facing in contact with soldier pile shall be 3'-0".
4. Coordinate pipe underdrain outlet with Drainage Contractor. Outlets shall slope at 1% min. See Drainage Plans. Cost included with Pipe Underdrains for Structures, 4".
5. Reference Top View of Detail for installing conduit sleeves in foundation in retaining wall on sheet SD8. One conduit with 24" radius elbow. Cost included with Concrete Superstructures.

REVISIONS	
NAME	DATE
REVISED	06/15/06
ADDENDUM 2	8/04/06

BOWMAN, BARRETT & ASSOCIATES INC.
CONSULTING ENGINEERS
Chicago, Illinois
312.228.0100
www.bbandainc.com

ILLINOIS DEPARTMENT OF TRANSPORTATION

F.A.I. 94/90 (DAN RYAN EXPRESSWAY)

GARFIELD BLVD TO 31ST STREET (NB LOCAL LANES)

RETAINING WALL N-43N-F
GENERAL PLAN AND ELEVATION

SCALE: NTS — DRAWN BY: LAM
DATE: JUNE 9, 2006 — CHECKED BY: BLU

N:\660\cadd\civil\NARETAINING WALLS\660_18SGPN43NF.dgn
10:47:25 AM
8/4/2006

F.A.I.	SECTION	COUNTY	TOTAL SHEETS	SHEET NO.
94/90	*	COOK	565	398
STA.		TO STA.		
FED. ROAD DIST. NO.	ILLINOIS	FED. AID PROJECT		

62301 *(2021-922 PT2 ETC 2324.6-1P) R-10

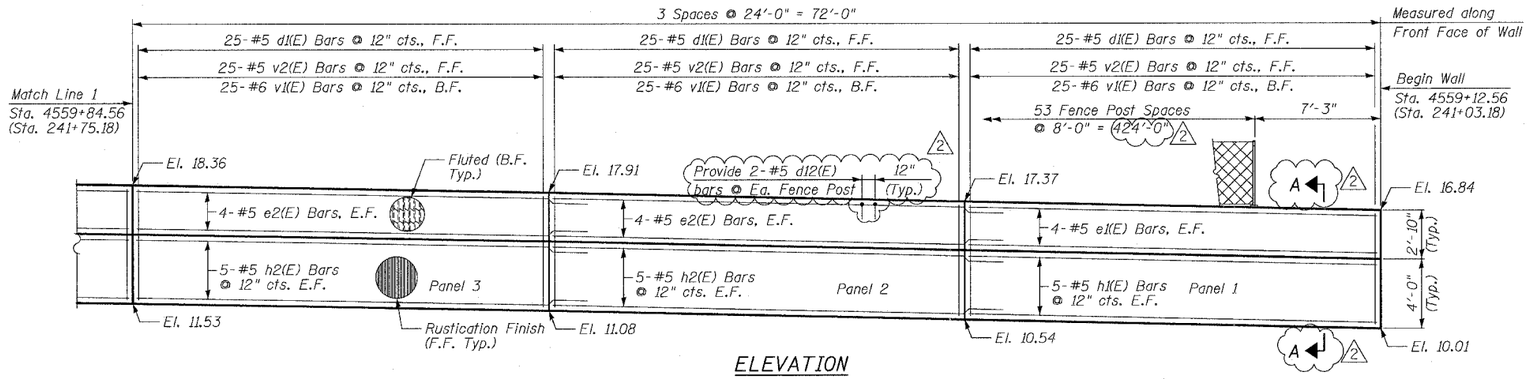

ELEVATION

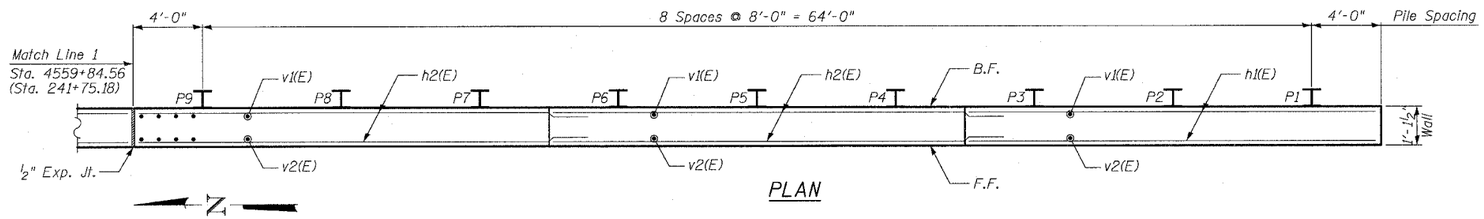

PLAN

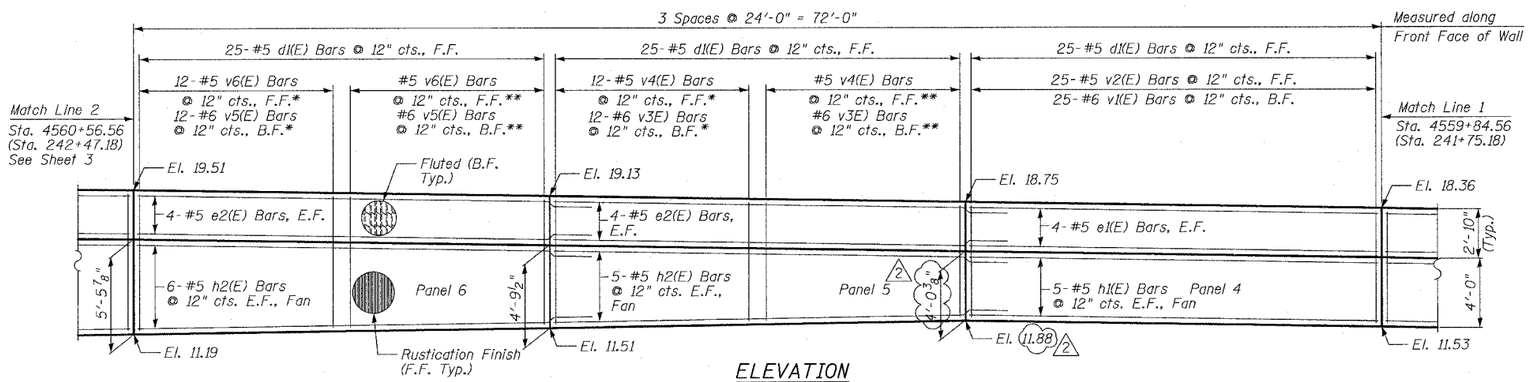

ELEVATION

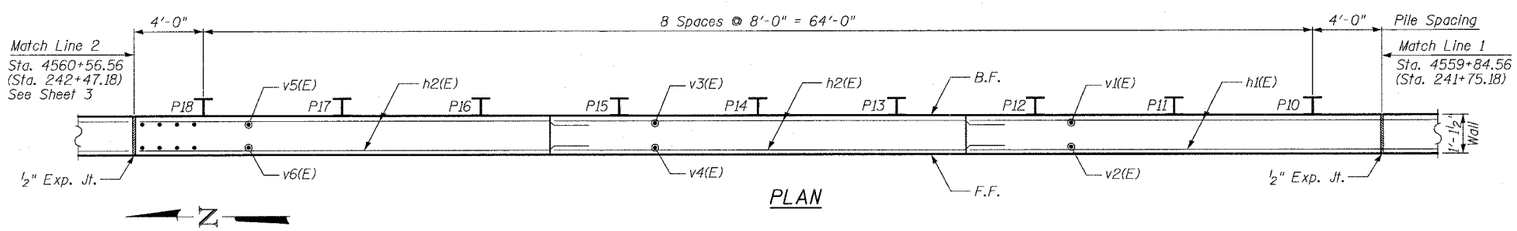

PLAN

NOTES:

1. Stations in parentheses are along ℄ La Salle St.
2. Facing in Plan Views is scaled 1:2 on an X:Y scale to show reinforcement.
3. See details for reinforcing bar clearances.
4. Eliminate Rustication on Front Face of Panel 1.
5. Cost of conduit and embedment shall be included with Concrete Structures.
6. Coordinate location with electrical contractor. Adjust rebar as required.

* Order bars full length and cut as indicated in cutting diagram.

** Remaining Bars from Cutting Diagram

F.F. - denotes Front Face
B.F. - denotes Back Face
E.F. - denotes Each Face

MIN BAR LAP

#5 - 2'-2"
#6 - 2'-7"

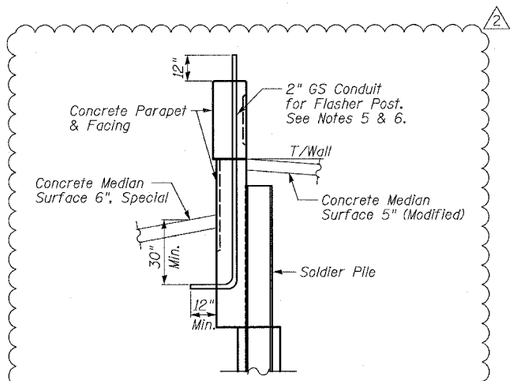

SECTION A-A

BOWMAN, BARRETT & ASSOCIATES INC.
CONSULTING ENGINEERS
Chicago, Illinois
312.228.0100
www.bbandainc.com

SHEET 2 OF 9

REVISIONS	
NAME	DATE
REVISED	06/22/06
ADDENDUM 2	8/04/06

ILLINOIS DEPARTMENT OF TRANSPORTATION
F.A.I. 94/90 (DAN RYAN EXPRESSWAY)
GARFIELD BLVD TO 31ST STREET (NB LOCAL LANES)

RETAINING WALL N-43N-F
WALL DETAILS 1

SCALE: NTS — DRAWN BY: MTR
DATE: JUNE 9, 2006 — CHECKED BY: BLU

N:\660\cadd\cfw\NB-RETAINING WALLS\660_JBSWR0W43NF.dgn
10:46:30 AM
8/4/2006

F.A.I.	SECTION	COUNTY	TOTAL SHEETS	SHEET NO.
94/90	•	COOK	565	399
STA.		TO STA.		
FED. ROAD DIST. NO.	ILLINOIS	FED. AID PROJECT		

62301 •(2021-922 PT2 ETC 2324.6-1P) R-10

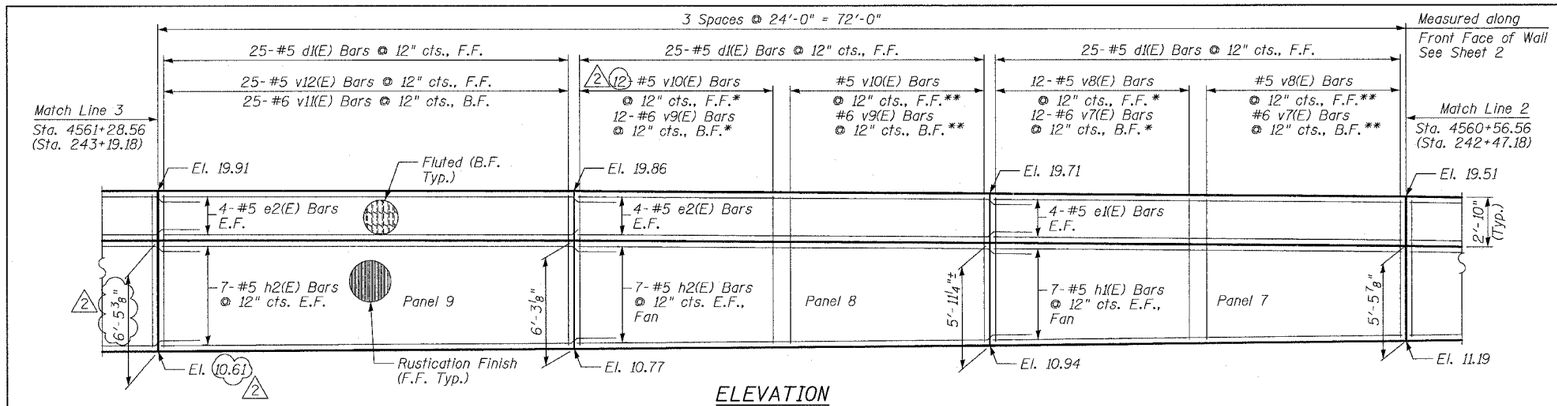

ELEVATION

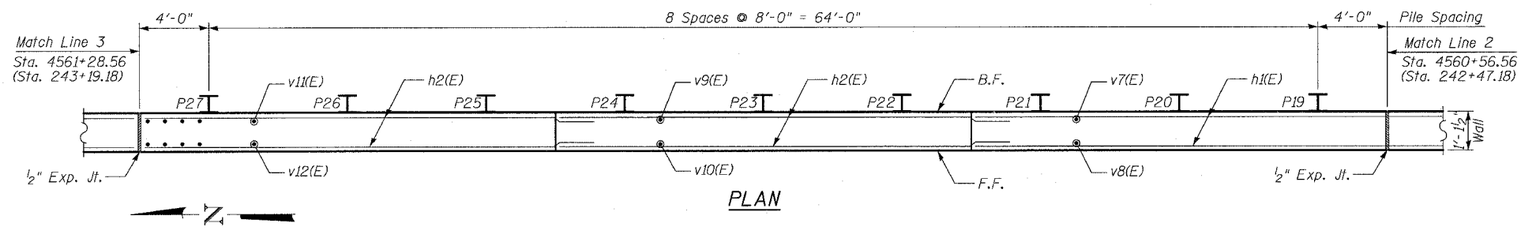

PLAN

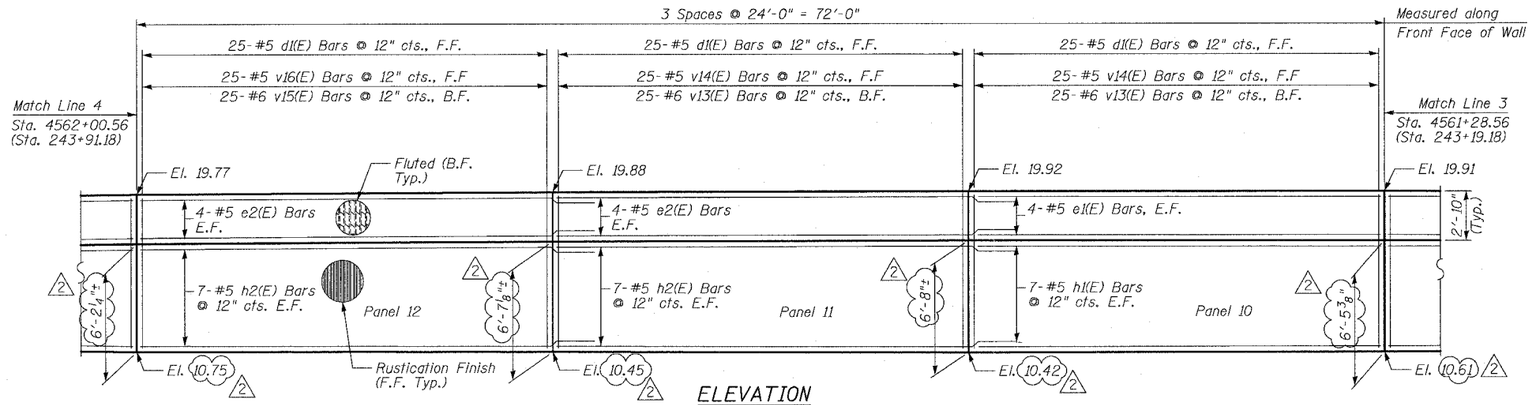

ELEVATION

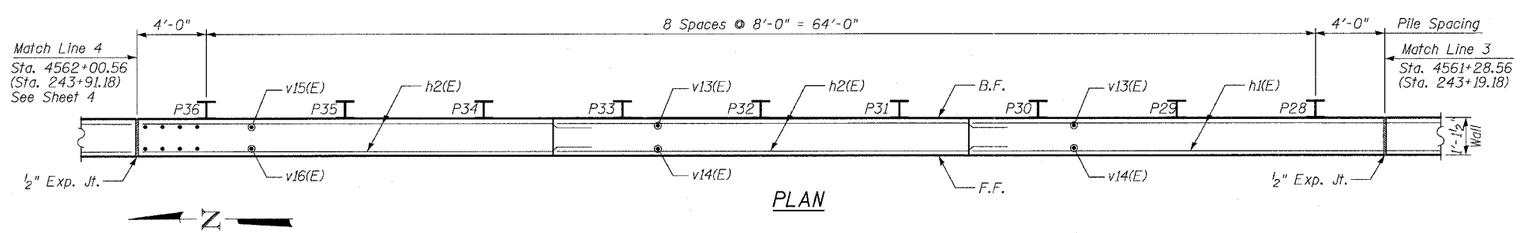

PLAN

NOTES:

1. Stations in parentheses are along ℄ La Salle St.
2. Facing in Plan Views is scaled 1:2 on an X:Y scale to show reinforcement.
3. See details for reinforcing bar clearances.

* Order bars full length and cut as indicated in cutting diagram.

** Remaining Bars from Cutting Diagram

F.F. - denotes Front Face
B.F. - denotes Back Face
E.F. - denotes Each Face

MIN BAR LAP

#5 - 2'-2"
#6 - 2'-7"

BOWMAN, BARRETT & ASSOCIATES INC.
CONSULTING ENGINEERS
Chicago, Illinois
312.228.0100
www.bbandainc.com

SHEET 3 OF 9

REVISIONS	
NAME	DATE
REVISED	06/22/06
ADDENDUM 2	8/04/06

ILLINOIS DEPARTMENT OF TRANSPORTATION

F.A.I. 94/90 (DAN RYAN EXPRESSWAY)

GARFIELD BLVD TO 31ST STREET (NB LOCAL LANES)

RETAINING WALL N-43N-F
WALL DETAILS 2

SCALE: NTS — DRAWN BY: LAM
DATE: JUNE 9, 2006 — CHECKED BY: BLU

N:\660cadd\chi\NB\RETAINING WALLS\660_JBSWRH43NF_01.dgn
10:55:02 AM
8/14/2006

F.A.I.	SECTION	COUNTY	TOTAL SHEETS	SHEET NO.
94/90	*	COOK	565	400
STA.		TO STA.		
FED. ROAD DIST. NO.	ILLINOIS	FED. AID PROJECT		

62301 *(2021-922 PT2 ETC 2324.6-1P) R-10

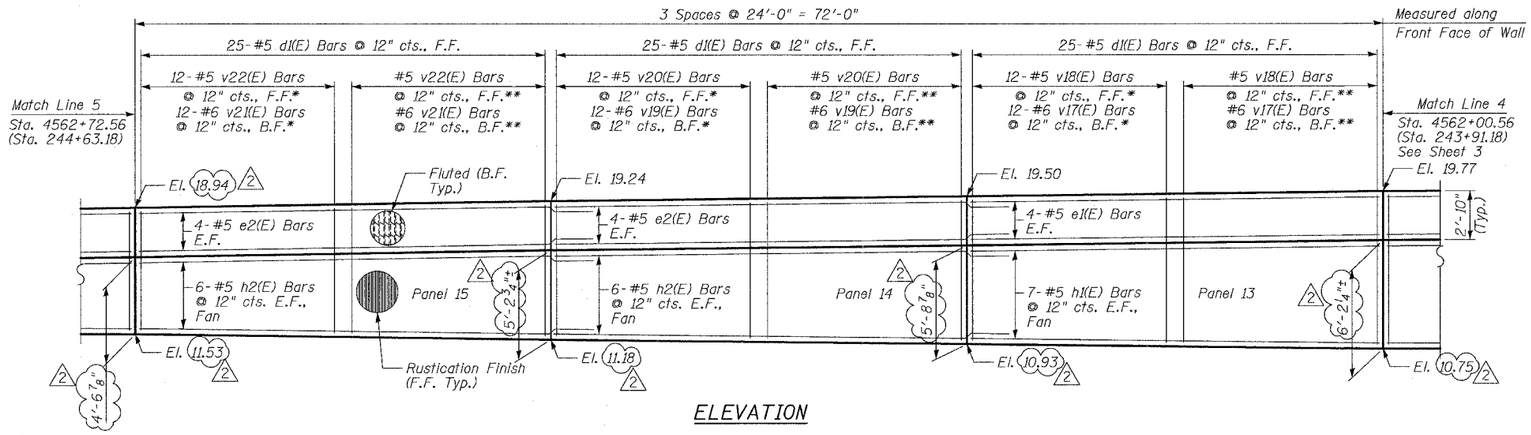

ELEVATION

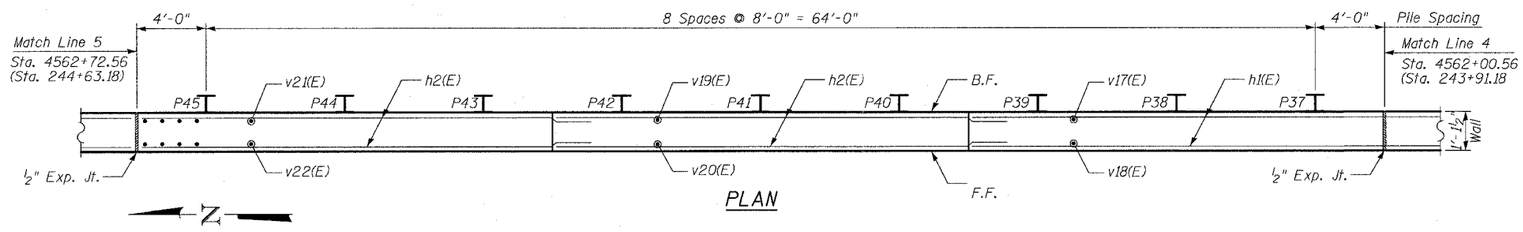

PLAN

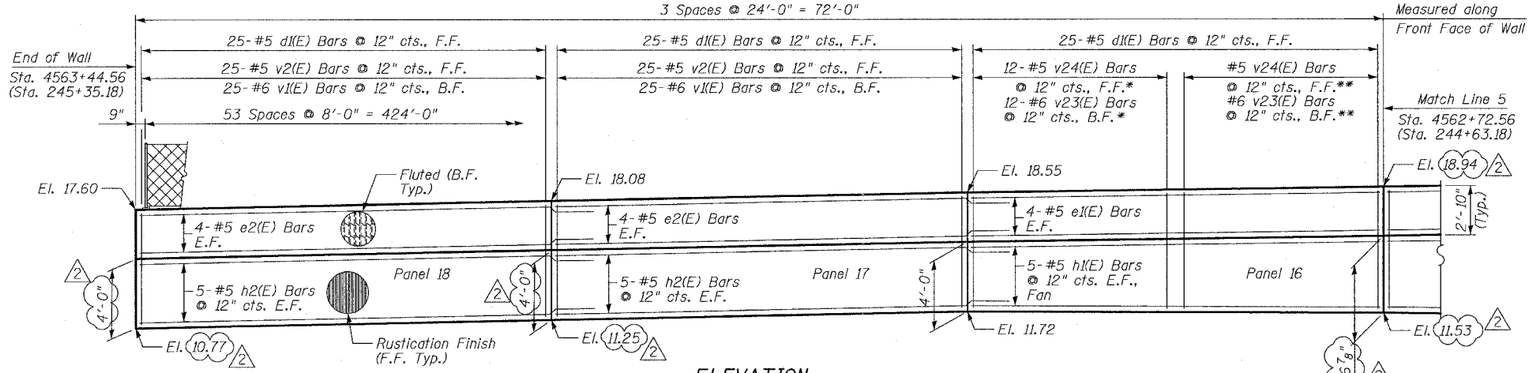

ELEVATION

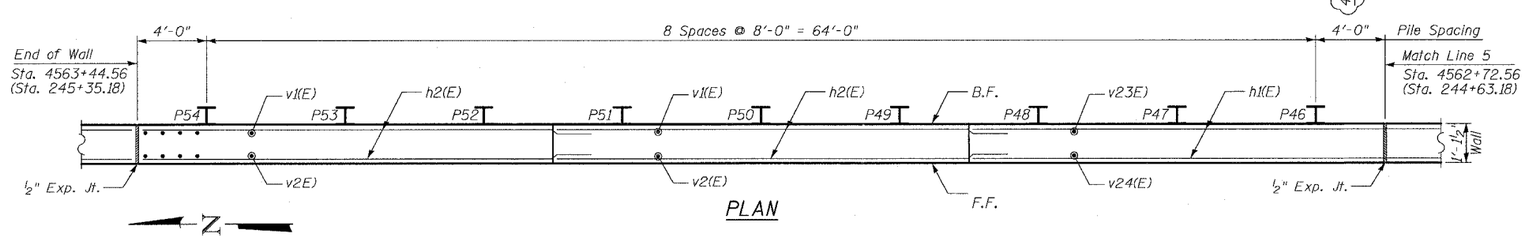

PLAN

NOTES:

1. Stations in parentheses are along ℄ La Salle St.
2. Facing in Plan Views is scaled 1:2 on an X:Y scale to show reinforcement.
3. See details for reinforcing bar clearances.

* Order bars full length and cut as indicated in cutting diagram.

** Remaining Bars from Cutting Diagram

F.F. - denotes Front Face
B.F. - denotes Back Face
E.F. - denotes Each Face

MIN BAR LAP

#5 - 2'-2"
#6 - 2'-7"

N:\660\add\ctr\N\RET AINING WALLS\660_JSH\RH43NF_02.dgn

SHEET 4 OF 9

REVISIONS	
NAME	DATE
REVISED	06/22/06
ADDENDUM 2	8/04/06

ILLINOIS DEPARTMENT OF TRANSPORTATION

F.A.I. 94/90 (DAN RYAN EXPRESSWAY)

GARFIELD BLVD TO 31ST STREET (NB LOCAL LANES)

RETAINING WALL N-43N-F
WALL DETAILS 3

SCALE: NTS — DRAWN BY: LAM

DATE: JUNE 9, 2006 — CHECKED BY: BLU

BOWMAN, BARRETT & ASSOCIATES INC.
CONSULTING ENGINEERS
Chicago, Illinois
312.228.0100
www.bbandainc.com

8/14/2006 10:50:41 AM

F.A.I.	SECTION	COUNTY	TOTAL SHEETS	SHEET NO.
94/90	*	COOK	565	401
STA.		TO STA.		
FED. ROAD DIST. NO.	ILLINOIS	FED. AID PROJECT		
62301	*(2021-922 PT2 ETC 2324.6-1P) R-10			

PILE LAYOUT

Pile	Offset* (Ft.)	Top of Wall El.	Top of Pile Elevation	Bott. of Facing Elevation	Section	Pile Tip Elevation	Pile Length (Ft.)
P-1	-4.05	14.10	13.10	10.14	W14x61	-9.24	22.33
P-2	-4.05	14.27	13.27	10.27	W14x61	-9.24	22.51
P-3	-4.05	14.45	13.45	10.40	W14x61	-9.24	22.69
P-4	-4.06	14.63	13.63	10.67	W14x61	-8.73	22.36
P-5	-4.06	14.81	13.81	10.81	W14x61	-8.73	22.54
P-6	-4.06	14.99	13.99	10.94	W14x61	-8.73	22.72
P-7	-4.06	15.15	14.15	11.19	W14x61	-8.61	22.77
P-8	-4.06	15.30	14.30	11.30	W14x61	-8.61	22.92
P-9	-4.06	15.45	14.45	11.42	W14x61	-8.61	23.07
P-10	-4.06	15.59	14.59	11.62	W14x61	-8.98	23.58
P-11	-4.06	15.72	14.72	11.72	W14x61	-8.98	23.71
P-12	-4.06	15.85	14.85	11.81	W14x61	-8.98	23.84
P-13	-4.07	15.98	14.98	11.81	W14x61	-9.38	24.36
P-14	-4.07	16.11	15.11	11.71	W14x61	-9.38	24.49
P-15	-4.07	16.24	15.24	11.61	W14x61	-9.38	24.61
P-16	-4.07	16.36	15.36	11.43	W14x61	-9.70	25.07
P-17	-4.07	16.49	15.49	11.35	W14x61	-9.70	25.19
P-18	-4.07	16.62	15.62	11.27	W14x61	-9.70	25.32
P-19	-3.67	16.71	15.71	11.13	W24x68	-9.86	25.57
P-20	-3.67	16.78	15.78	11.06	W24x68	-9.86	25.64
P-21	-3.67	16.85	15.85	11.00	W24x68	-9.86	25.70
P-22	-3.67	16.90	15.90	10.90	W24x68	-10.03	25.93
P-23	-3.67	16.95	15.95	10.86	W24x68	-10.03	25.99
P-24	-3.67	17.01	16.01	10.81	W24x68	-10.03	26.04
P-25	-3.68	17.04	16.04	10.74	W24x68	-10.13	26.17
P-26	-3.68	17.06	16.06	10.72	W24x68	-10.13	26.19
P-27	-3.68	17.07	16.07	10.70	W24x68	-10.13	26.20
P-28	-3.69	17.08	16.08	10.66	W24x68	-10.16	26.24
P-29	-3.69	17.08	16.08	10.66	W24x68	-10.16	26.24
P-30	-3.69	17.09	16.09	10.65	W24x68	-10.16	26.24
P-31	-3.69	17.08	16.08	10.65	W24x68	-11.35	27.43
P-32	-3.69	17.07	16.07	10.67	W24x68	-11.35	27.42
P-33	-3.69	17.06	16.06	10.68	W24x68	-11.35	27.40
P-34	-3.69	17.03	16.03	10.72	W24x68	-11.30	27.33
P-35	-3.69	16.99	15.99	10.75	W24x68	-11.30	27.29
P-36	-3.69	16.96	15.96	10.78	W24x68	-11.30	27.25
P-37	-3.70	16.89	15.89	10.86	W24x68	-11.18	27.07
P-38	-3.70	16.80	15.80	10.91	W24x68	-11.18	26.98
P-39	-3.70	16.71	15.71	10.96	W24x68	-11.18	26.89
P-40	-4.11	16.62	15.62	11.08	W14x61	-9.58	25.20
P-41	-4.11	16.54	15.54	11.15	W14x61	-9.58	25.11
P-42	-4.11	16.45	15.45	11.21	W14x61	-9.58	25.02
P-43	-4.11	16.36	15.36	11.36	W14x61	-9.31	24.67
P-44	-4.11	16.26	15.26	11.45	W14x61	-9.31	24.57
P-45	-4.11	16.16	15.16	11.54	W14x61	-9.31	24.47
P-46	-4.12	16.04	15.04	11.65	W14x61	-8.97	24.01
P-47	-4.12	15.91	14.91 2	11.67	W14x61	-8.97	23.88
P-48	-4.12	15.77	14.77	11.70	W14x61	-8.97 2	23.74
P-49	-4.30	15.64	14.64	11.60	W10x33	-4.70	19.34
P-50	-4.30	15.48	14.48	11.48	W10x33	-4.70	19.18
P-51	-4.30	15.32	14.32	11.36	W10x33	-4.70	19.02
P-52	-4.30	15.16	14.16	11.12	W10x33	-4.25	18.42
P-53	-4.30	15.00	14.00	11.00	W10x33	-4.25	18.26
P-54	-4.30	14.84	13.84	10.88	W10x33	-4.25	18.10

*From ℄ La Salle St. 2

NOTES

1. All W10 and W14 piles have drilled shaft dia = 2'-0".
   All W24 piles have drilled shaft dia = 3'-0".

BILL OF MATERIAL

Item	Unit	Quantity
Furnishing Soldier Piles (W Sections)	Foot	1,315
Drilling and Setting Soldier Piles (In Soil)	Cu. Ft.	6,293

2

SHEET 5 OF 9

REVISIONS	
NAME	DATE
REVISED	06/15/06
2 ADDENDUM 2	8/04/06

ILLINOIS DEPARTMENT OF TRANSPORTATION

F.A.I. 94/90 (DAN RYAN EXPRESSWAY)

GARFIELD BLVD TO 31ST STREET (NB LOCAL LANES)

RETAINING WALL N-43N-F
PILE LAYOUT

SCALE: NTS — DRAWN BY: MTR

DATE: JUNE 9, 2006 — CHECKED BY: BLU

BOWMAN, BARRETT & ASSOCIATES INC.
CONSULTING ENGINEERS
Chicago, Illinois
312.228.0100
www.bbandainc.com

F.A.I.	SECTION	COUNTY	TOTAL SHEETS	SHEET NO.
94/90	*	COOK	565	402
STA.		TO STA.		
FED. ROAD DIST. NO.	ILLINOIS	FED. AID PROJECT		

62301 *(2021-922 PT2 ETC 2324.6-1P) R-10

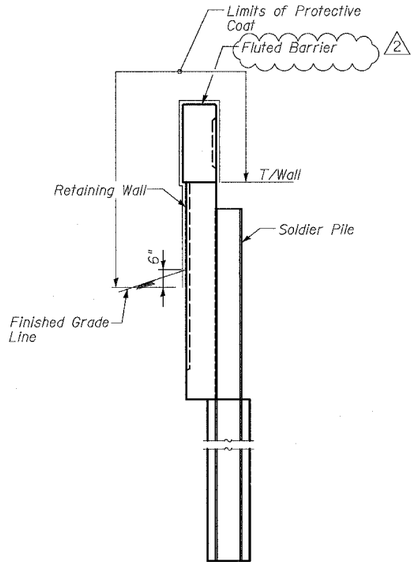

DETAIL OF LIMITS OF PROTECTIVE COAT

Apply Protective Coat to Front Face only when les than 25'-0" to Ramp E.O.P.

2

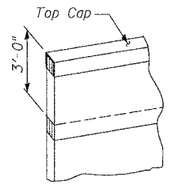

TOP COURSE

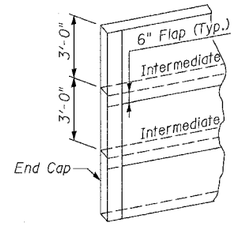

HORIZONTAL SECTION AND SEAM

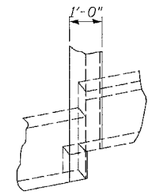

VERTICAL SPLICE

GEOCOMPOSITE WALL DRAIN DETAILS

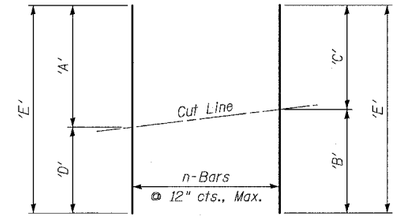

* BAR CUTTING DIAGRAM

* Order bars v3(E) thru v10(E) and v17(E) thru v24(E) full length, cut as shown and use remainder where indicated.

TABLE OF DIMENSIONS

Bar	'A'	'B'	'C'	'D'	'E'	n
v3(E)	6'-6"	6'-10"	6'-11"	7'-3"	13'-9"	12
v4(E)	3'-8"	4'-0"	4'-1"	4'-5"	8'-1"	12
v5(E)	7'-3"	7'-7"	7'-8"	8'-0"	15'-3"	12
v6(E)	4'-5"	4'-9"	4'-10"	5'-2"	9'-7"	12
v7(E)	8'-0"	8'-2"	8'-3"	8'-5"	16'-5"	12
v8(E)	5'-2"	5'-4"	5'-5"	5'-7"	10'-9"	12
v9(E)	8'-5"	8'-7"	8'-7"	8'-9"	17'-2"	12
v10(E)	5'-7"	5'-9"	5'-9"	5'-11"	11'-6"	12
v17(E)	8'-8"	8'-5"	8'-5"	8'-2"	16'-10"	12
v18(E)	5'-10"	5'-7"	5'-7"	5'-4"	11'-2"	12
v19(E)	8'-2"	7'-11"	7'-11"	7'-8"	15'-10"	12
v20(E)	5'-4"	5'-1"	5'-1"	4'-10"	10'-2"	12
v21(E)	7'-8"	7'-4"	7'-4"	7'-0"	14'-8"	12
v22(E)	4'-10"	4'-6"	4'-6"	4'-2"	9'-0"	12
v23(E)	7'-0"	6'-9"	6'-9"	6'-6"	13'-6"	12
v24(E)	4'-2"	3'-11"	3'-11"	3'-8"	7'-10"	12
	2		2			

BILL OF MATERIAL

	Bar	No.	Size	Length	Shape
	d1(E)	450	#5	4'-7"	
2	d12(E)	108	#5	2'-4"	
	e1(E)	48	#5	23'-8"	
	e2(E)	96	#5	26'-2"	
	h1(E)	72	#5	23'-8"	
	h2(E)	142	#5	26'-2"	
	v1(E)	150	#6	6'-6"	
	v2(E)	150	#5	3'-8"	
*	v3(E)	12	#6	13'-9"	
*	v4(E)	12	#5	8'-1"	
*	v5(E)	12	#6	15'-3"	
*	v6(E)	12	#5	9'-7"	
*	v7(E)	12	#6	16'-5"	
*	v8(E)	12	#5	10'-9"	
*	v9(E)	12	#6	17'-2"	
*	v10(E)	12	#5	11'-6"	
	v11(E)	25	#6	8'-10"	
	v12(E)	25	#5	6'-0"	
	v13(E)	50	#6/2	9'-0"	
	v14(E)	50	#5	6'-2"	
	v15(E)	25	#6	8'-9"	
	v16(E)	25	#5	5'-11"	
*	v17(E)	12	#6	16'-10"	
*	v18(E)	12	#5	11'-2"	
*	v19(E)	12	#6	15'-10"	
*	v20(E)	12	#5	2 10'-2"	
*	v21(E)	12	#6	14'-8"	
*	v22(E)	12	#5	9'-0"	
*	v23(E)	12	#6	13'-6"	
*	v24(E)	12	#5	7'-10"	
	Reinforcement Bars, Epoxy Coated			Pound	19,080
	Concrete Structures			Cu. Yd.	88.3
	Concrete Superstructure			Cu. Yd.	54.9
	Chain Link Fence, 42" Attached to Structure (Special)			Foot	424
	Rustication Finish			Sq. Ft.	2,371
	Protective Coat			Sq. Yd.	284

2

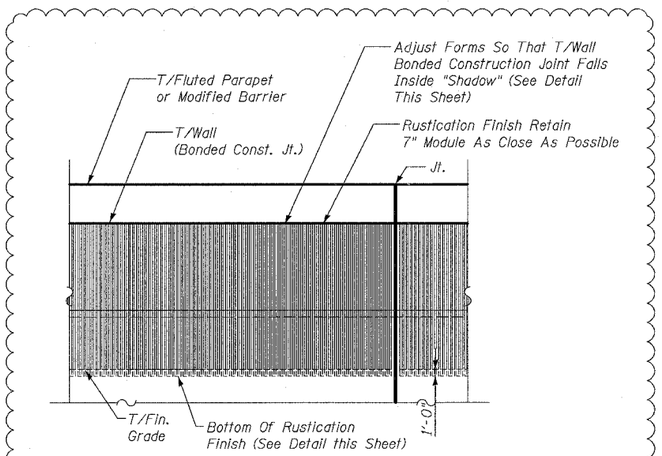

FRONT FACE ELEVATION OF RETAINING WALL

2

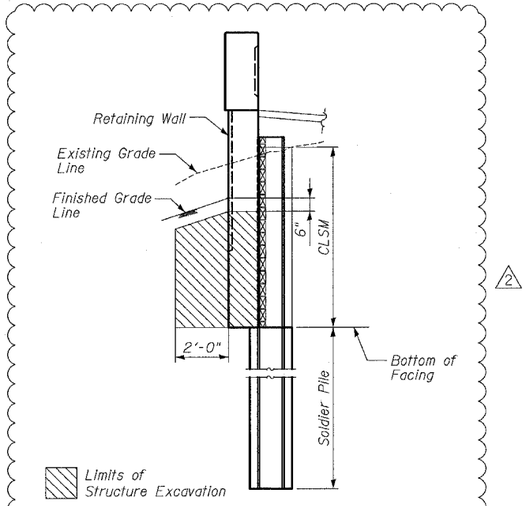

LIMITS OF STRUCTURE EXCAVATION

2

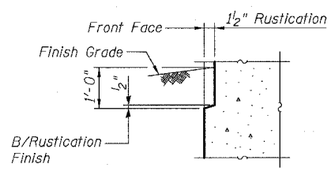

BOTTOM OF RUSTICATION FINISH @ FINISHED GRADE

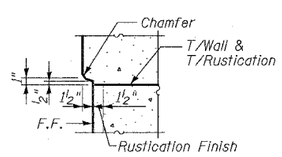

TOP OF RUSTICATION FINISH

2

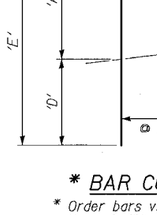

BAR d1(E)

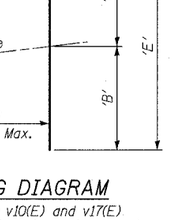

BAR d12(E)

2

NOTES:

1. For excavations and/or embankments outside limits indicated see Roadway Plans and schedules.
2. Provide Pourous Granular Embankment (Special) behind wall (2'-0" min.) from existing or excavated ground line to bottom of Concrete Median Surface 5" (Modified).

SHEET 6 OF 9

REVISIONS	
NAME	DATE
REVISED	6/20/06
ADDENDUM 2	8/04/06

2

ILLINOIS DEPARTMENT OF TRANSPORTATION

F.A.I. 94/90 (DAN RYAN EXPRESSWAY)
GARFIELD BLVD TO 31ST STREET (NB LOCAL LANES)

RETAINING WALL N-43N-F
BILL OF MATERIAL

SCALE: NTS — DRAWN BY: MTR
DATE: JUNE 9, 2006 — CHECKED BY: BLU

BOWMAN, BARRETT & ASSOCIATES INC.
CONSULTING ENGINEERS
Chicago, Illinois
312.228.0100
www.bbandainc.com

N:\66C\cadd\cfx\NB-RET AWING WALLS\66C_JBSwrH43NF_03.dgn
8/4/2006 10:52:57 AM

F.A.I.	SECTION	COUNTY	TOTAL SHEETS	SHEET NO.
94/90	•	COOK	565	403
STA.		TO STA.		
FED. ROAD DIST. NO.	ILLINOIS	FED. AID PROJECT		

62301 •(2021-922 PT2 ETC 2324.6-1P) R-10

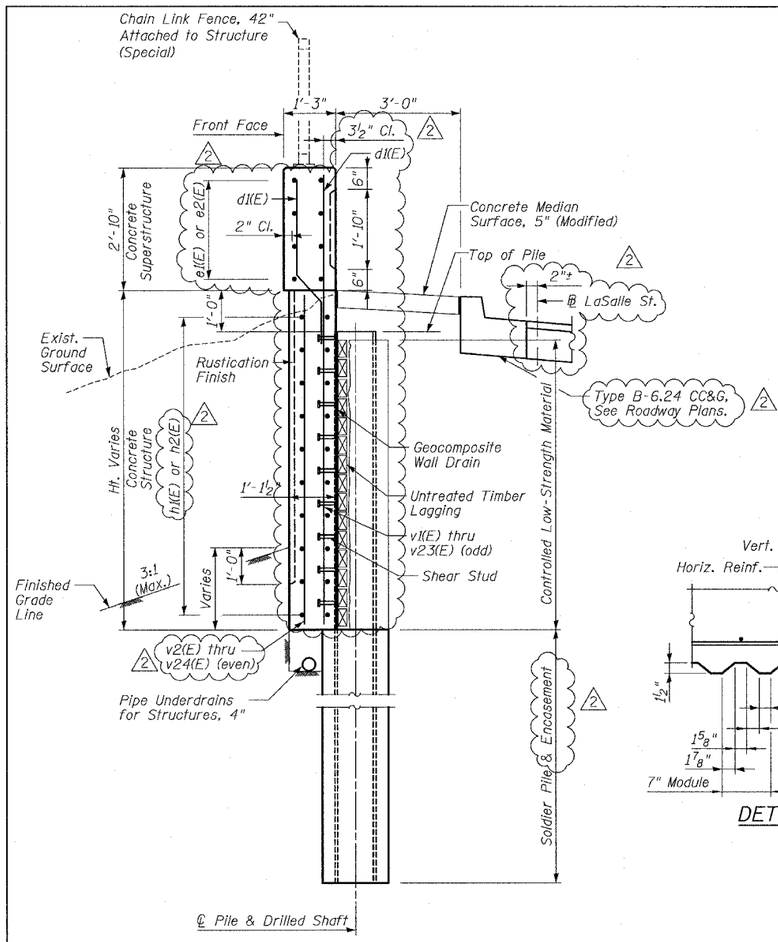

TYP. SECTION THRU PROPOSED WALL

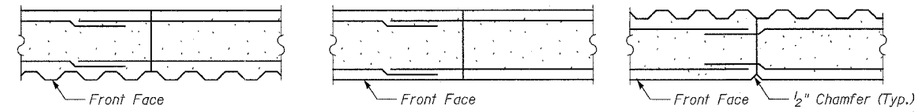

WITH RUSTICATION FINISH — BELOW RUSTICATION FINISH — ABOVE RUSTICATION FINISH (In Fluted Parapet)

CONSTRUCTION JOINT DETAILS

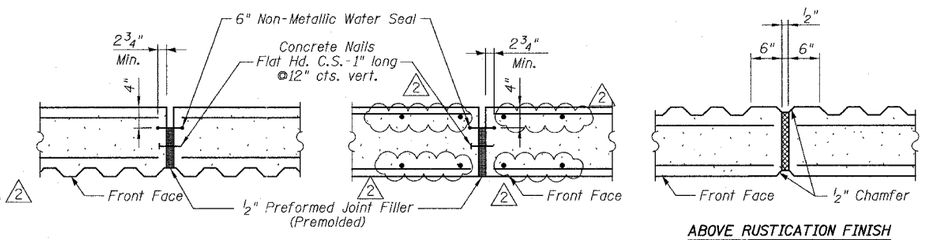

WITH RUSTICATION FINISH — BELOW RUSTICATION FINISH — ABOVE RUSTICATION FINISH (In Fluted Parapet)

EXPANSION JOINT DETAILS

Cost of P.J.F., Water Seal and Concrete Nails included with Concrete Structures.

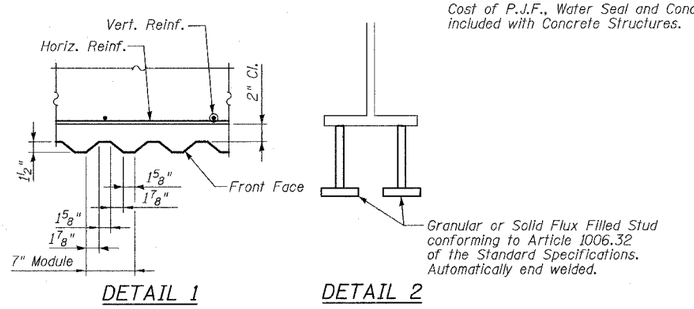

DETAIL 1 — DETAIL 2

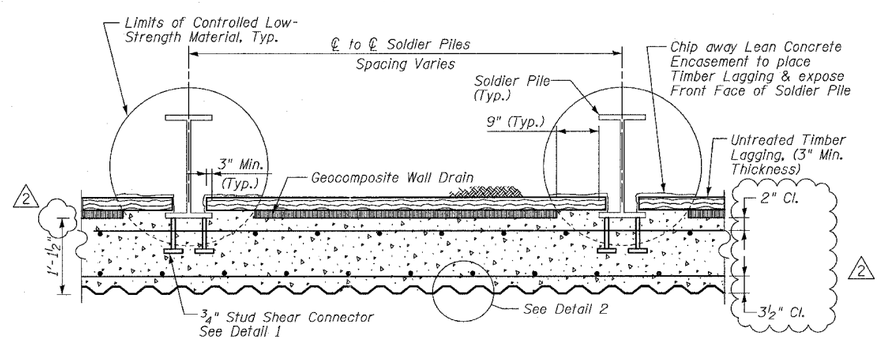

SECTION THRU SOLDIER PILE WALL

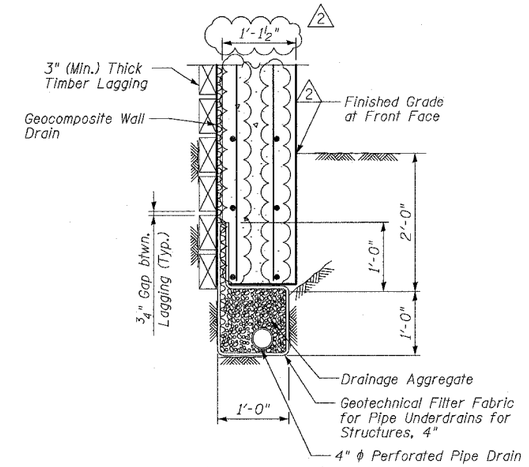

PIPE UNDERDRAIN DETAIL BETWEEN SOLDIER PILES

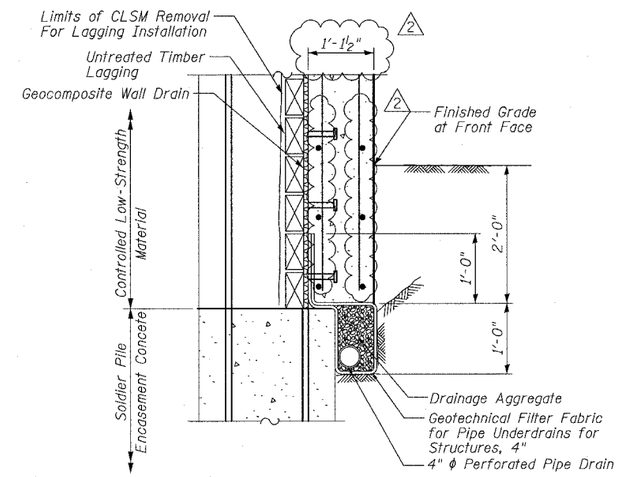

PIPE UNDERDRAIN DETAIL AT SOLDIER PILES

SHEET 7 OF 9

REVISIONS	
NAME	DATE
REVISED	06/21/06
ADDENDUM 2	8/04/06

ILLINOIS DEPARTMENT OF TRANSPORTATION

F.A.I. 94/90 (DAN RYAN EXPRESSWAY)
GARFIELD BLVD TO 31ST STREET (NB LOCAL LANES)

RETAINING WALL N-43N-F
MISCELLANEOUS DETAILS

SCALE: NTS — DRAWN BY: MTR
DATE: JUNE 9, 2006 — CHECKED BY: BLU

BOWMAN, BARRETT & ASSOCIATES INC.
CONSULTING ENGINEERS
Chicago, Illinois
312.228.0100
www.bbandainc.com

N:\560\cadd\cfs\N\N-R-ET AINING WALLS-560_IDSMDH43NF.dgn
8/4/2006 11:50:34 AM

F.A.I.	SECTION	COUNTY	TOTAL SHEETS	SHEET NO.
94/90	*	COOK	565	406
STA.		TO STA.		
FED. ROAD DIST. NO.	ILLINOIS	FED. AID PROJECT		
62301	*(2021-922 PT2 ETC 2324.6-1P) R-10			

Benchmark: BM No. 3539
"X" Cut on Easterly bolt of light pole base at the SE corner of 43rd St. and La Salle St.
El. 13.10

All elevations are based on the Chicago City Datum (C.C.D.)

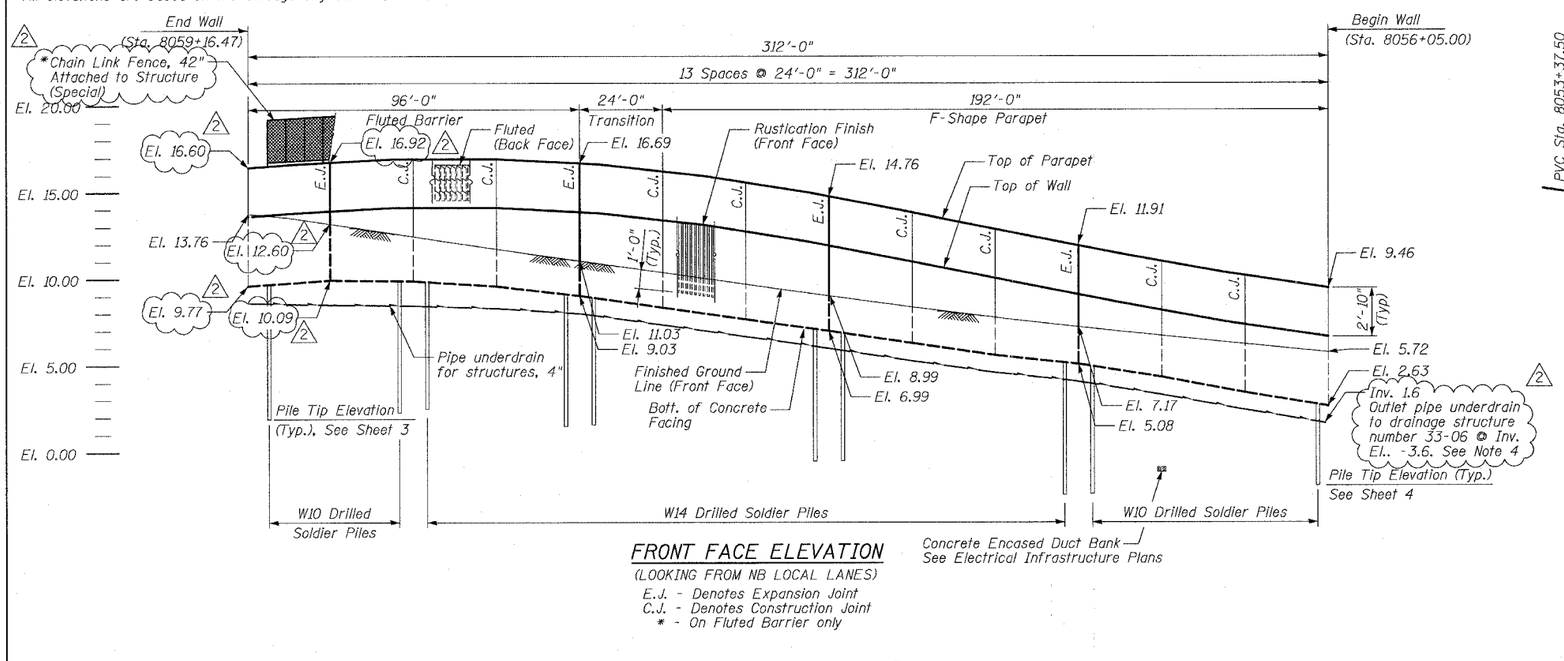

FRONT FACE ELEVATION

(LOOKING FROM NB LOCAL LANES)

E.J. - Denotes Expansion Joint
C.J. - Denotes Construction Joint
* - On Fluted Barrier only

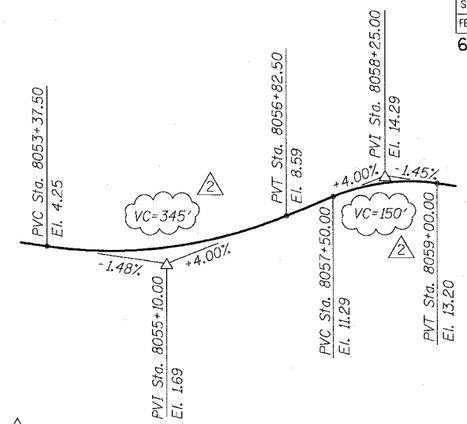

PROFILE GRADE LINE

Along @ Ramp 43D

TOTAL BILL OF MATERIAL

ITEM	UNIT	QTY.
Structure Excavation	Cu. Yd.	70
Reinforcement Bars, Epoxy Coated	Pound	13,280
Concrete Structures	Cu. Yd.	55.2
Concrete Superstructure	Cu. Yd.	31.7
Protective Coat	Sq. Yd.	172
Rustication Finish	Sq. Ft.	1136
Stud Shear Connector	Each	270
Untreated Timber Lagging	Sq. Ft.	1064
Furnishing Soldier Piles (W Section)	Foot	874
Drilling & Setting Soldier Piles (In Soil)	Cu. Ft.	2,452
Geocomposite Wall Drain	Sq. Yd.	89
Pipe Underdrains for Structures, 4"	Foot	335
Chain Link Fence, 42", Attached to Structure (Special)	Foot	95
Porous Granular Embankment (Special)	Cu. Yd.	102

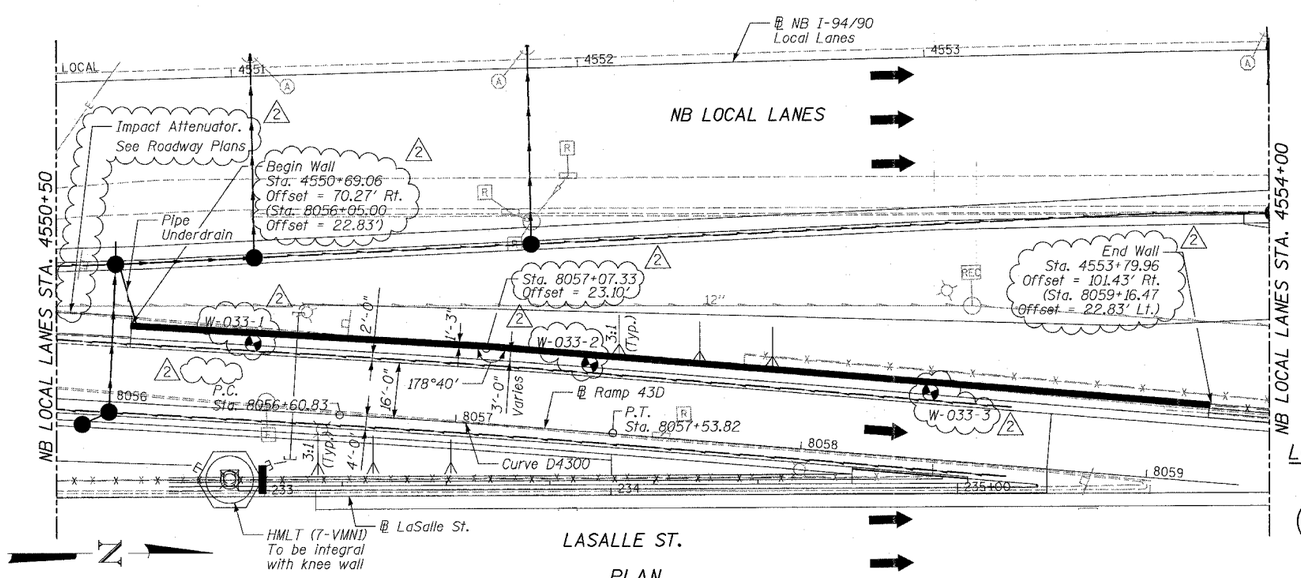

PLAN

DESIGN SPECIFICATIONS

2002 AASHTO

DESIGN STRESSES

FIELD UNITS

f'c = 3,500 psi
fy = 60,000 psi (Reinforcement)
fy = 36,000 psi (M270 Gr 36) Soldier Piles

PROP. CURVE D4300

P.I. Sta. = 8057+07.33
Δ = 1° 19' 55" (RT)
D = 1° 25' 57"
R = 4,000.00'
T = 46.49'
L = 92.99'

LEGEND

- Soil Boring Location
- High Mast Lighting Foundation and Tower (See Notes)
- Proposed Drainage Structure
- Proposed Underdrain
- Proposed Storm Sewer

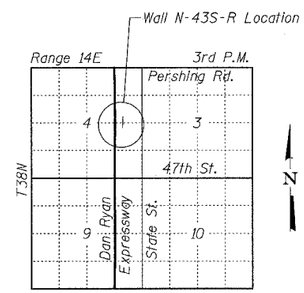

LOCATION SKETCH

Notes:

1. Offsets given to Front Face of Wall. Station and offsets in parentheses are along Frontage Road or ramp.
2. Min. Facing in contact with soldier pile shall be 3'-0".
3. Coordinate pipe underdrain outlet with Drainage Contractor. Outlets shall slope at 1% min. See Drainage Plans. Cost included with Pipe Underdrains for Structures, 4".

REVISIONS	
NAME	DATE
REVISED	06/16/06
ADDENDUM 2	8/04/06

SHEET 1 OF 9

ILLINOIS DEPARTMENT OF TRANSPORTATION

F.A.I. 94/90 (DAN RYAN EXPRESSWAY)

GARFIELD BLVD TO 31ST STREET (NB LOCAL LANES)

RETAINING WALL N-43S-R
GENERAL PLAN AND ELEVATION

SCALE: NTS — DRAWN BY: MTR
DATE: JUNE 9, 2006 — CHECKED BY: BLU

BOWMAN, BARRETT & ASSOCIATES INC.
CONSULTING ENGINEERS
Chicago, Illinois
312.228.0100
www.bbandainc.com

N:\660\acad\chi\N-09-WET ANNING WALLS\660_JBSGPW433R.dgn

8/14/2006 2:39:10 PM

F.A.I.	SECTION	COUNTY	TOTAL SHEETS	SHEET NO.
94/90	•	COOK	565	407
STA.		TO STA.		
FED. ROAD DIST. NO.	ILLINOIS	FED. AID PROJECT		

62301 •(2021-922 PT2 ETC 2324.6-1P) R-10

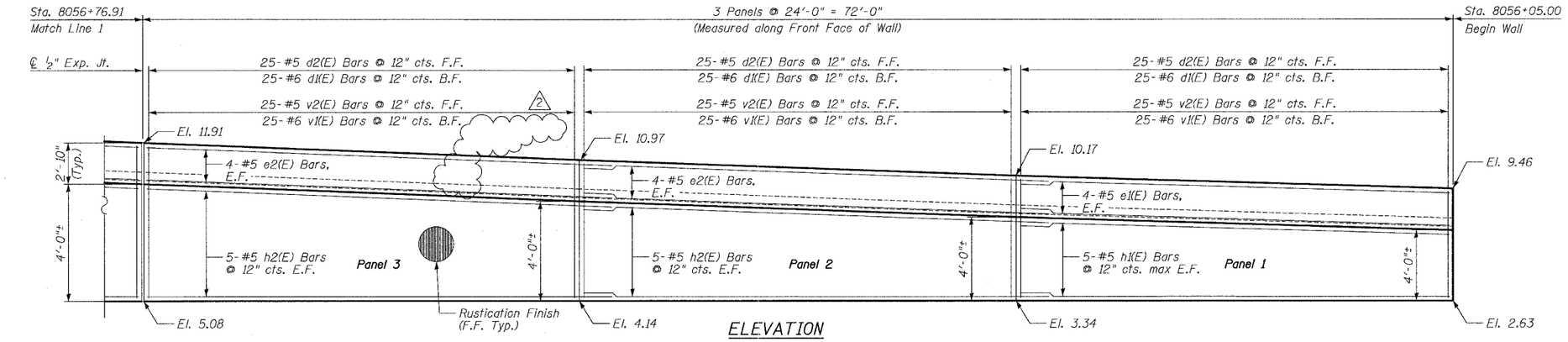

ELEVATION

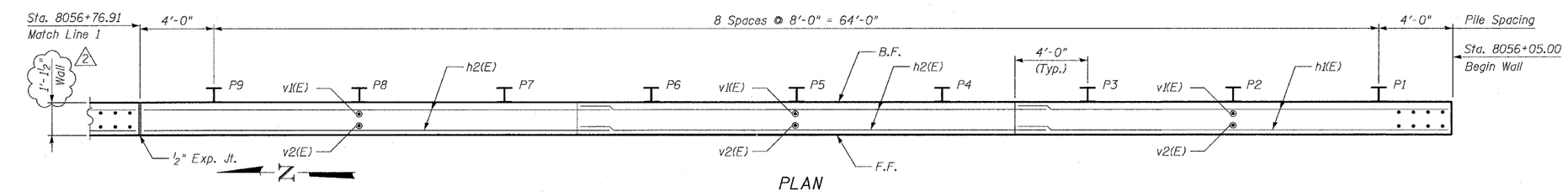

PLAN

F.F. - denotes Front Face
B.F. - denotes Back Face
E.F. - denotes Each Face

MIN. BAR LAP

#5- 2'-2"
#6- 2'-7"

Notes:

1. Stationing given is ℄ Ramp 43D.
2. Facing in Plan Views is scaled 1:2 on an X:Y scale to show reinforcement.
3. See details for reinforcing bar clearances.

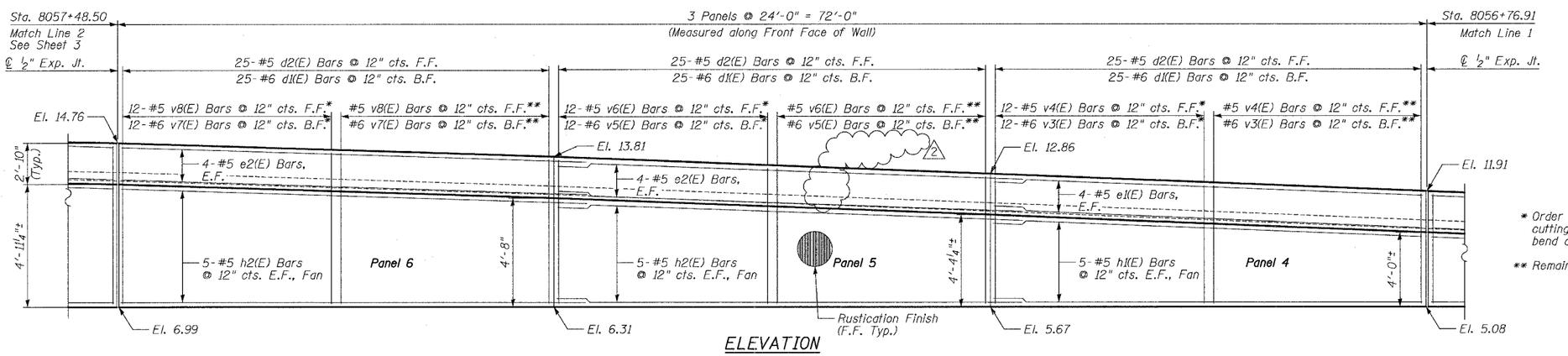

ELEVATION

* Order bars full length, cut as indicated in cutting diagram, then bend as shown in bar bend details if required.

** Remaining Bars from Cutting Diagram

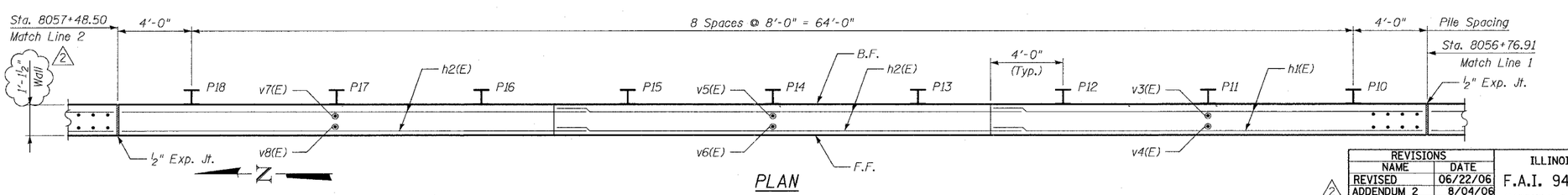

PLAN

SHEET 2 OF 9

REVISIONS	
NAME	DATE
REVISED	06/22/06
ADDENDUM 2	8/04/06

ILLINOIS DEPARTMENT OF TRANSPORTATION

F.A.I. 94/90 (DAN RYAN EXPRESSWAY)

GARFIELD BLVD TO 31ST STREET (NB LOCAL LANES)

RETAINING WALL N-43S-R
WALL DETAILS 1

SCALE: NTS — DRAWN BY: LAM

DATE: JUNE 9, 2006 — CHECKED BY: BLU

BOWMAN, BARRETT & ASSOCIATES INC.
CONSULTING ENGINEERS
Chicago, Illinois
312.228.0100
www.bbandainc.com

N:\660\cadd\dwg\NO PILET AINING WALLS\660_RSWH43SR_01.dgn
10:54:33 AM
8/4/2006

F.A.I.	SECTION	COUNTY	TOTAL SHEETS	SHEET NO.
94/90 *		COOK	565	408
STA.		TO STA.		
FED. ROAD DIST. NO.	ILLINOIS	FED. AID PROJECT		

62301 *(2021-922 PT2 ETC 2324.6-1P) R-10

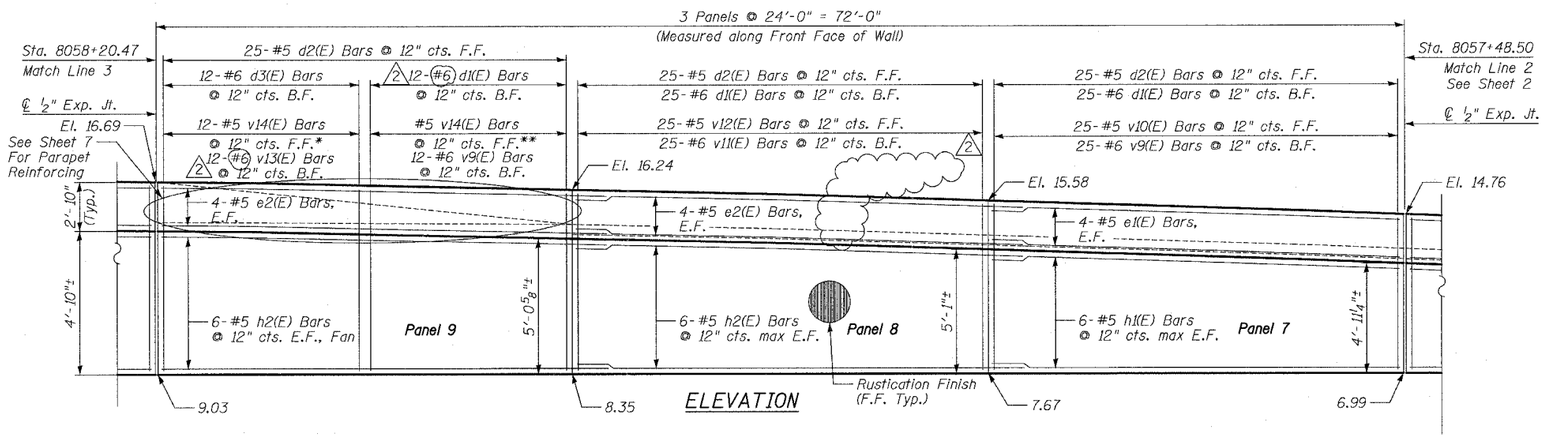

ELEVATION

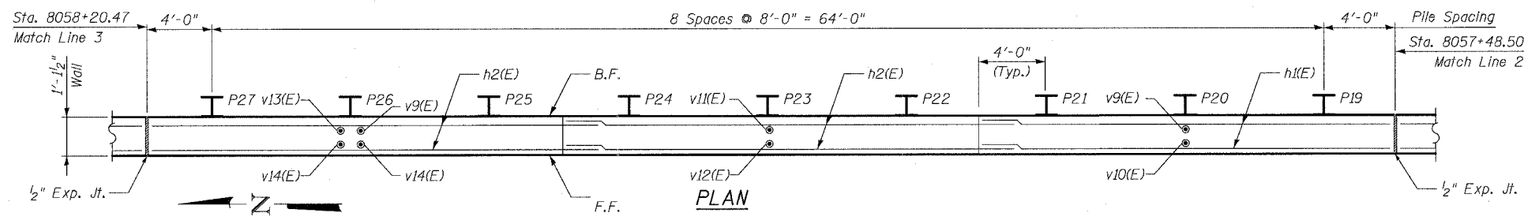

PLAN

Notes:

1. Stationing given is ℄ Ramp 43D.
2. Facing in Plan Vies is scaled 1:2 on an X:Y scale to show reinforcement.
3. See details for reinforcing bar clearances.

* Order bars full length, cut as indicated in cutting diagram, then bend as shown in bar bend details if required.

** Remaining Bars from Cutting Diagram

F.F. - denotes Front Face
B.F. - denotes Back Face
E.F. - denotes Each Face

Min Bar Lap
#5- 2'-2"
#6- 2'-7"

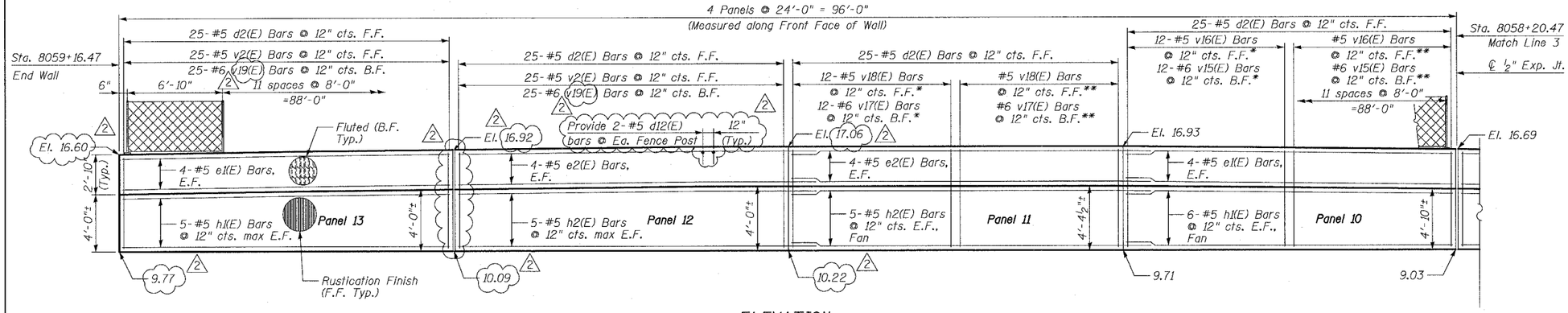

ELEVATION

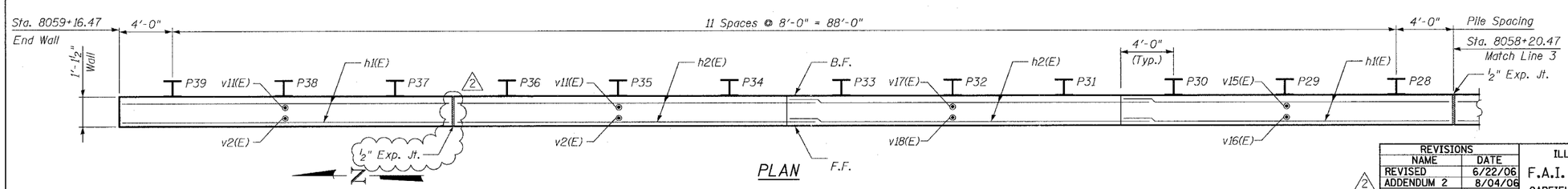

PLAN

REVISIONS	
NAME	DATE
REVISED	6/22/06
ADDENDUM 2	8/04/06

SHEET 3 OF 9

ILLINOIS DEPARTMENT OF TRANSPORTATION

F.A.I. 94/90 (DAN RYAN EXPRESSWAY)

GARFIELD BLVD TO 31ST STREET (NB LOCAL LANES)

RETAINING WALL N-43S-R
WALL DETAILS 2

SCALE: NTS — DRAWN BY: LAM

DATE: JUNE 9, 2006 — CHECKED BY: BLU

BOWMAN, BARRETT & ASSOCIATES INC.
CONSULTING ENGINEERS
Chicago, Illinois
312.228.0100
www.bbandainc.com

N:\660\cad\dgn\NB\RETAINING WALLS\660_NB5WRH43SR.dgn

10:55:27 AM 8/4/2006

F.A.I.	SECTION	COUNTY	TOTAL SHEETS	SHEET NO.
94/90	*	COOK	565	409
STA.		TO STA.		
FED. ROAD DIST. NO.	ILLINOIS	FED. AID PROJECT		

62301 *(2021-922 PT2 ETC 2324.6-1P) R-10

PILE LAYOUT

Pile	Offset* (Ft.)	Top of Wall El.	Top of Pile Elevation	Bott. of Facing Elevation	Section	Pile Tip Elevation	Pile Length (Ft.)
P-1	-21.17	6.75	5.75	2.80	W10x33	-12.27	18.02
P-2	-21.17	6.98	5.98	2.98	W10x33	-12.27	18.26
P-3	-21.17	7.22	6.22	3.16	W10x33	-12.27	18.49
P-4	-21.17	7.47	6.47	3.54	W10x33	-11.81	18.28
P-5	-21.17	7.74	6.74	3.74	W10x33	-11.81	18.55
P-6	-21.17	8.01	7.01	3.94	W10x33	-11.81	18.82
P-7	-21.17	8.30	7.30	4.37	W10x33	-11.32	18.61
P-8	-21.18	8.61	7.61	4.61	W10x33	-11.32	18.93
P-9	-21.06	8.92	7.92	4.84	W10x33	-11.32	19.24
P-10	-21.06	9.23	8.23	5.22	W14x48	-15.54	23.78
P-11	-21.10	9.55	8.55	5.37	W14x48	-15.54	24.09
P-12	-21.17	9.86	8.86	5.52	W14x48	-15.54	24.41
P-13	-21.25	10.18	9.18	5.83	W14x48	-15.04	24.22
P-14	-21.22	10.50	9.50	5.99	W14x48	-15.04	24.54
P-15	-21.14	10.82	9.82	6.15	W14x48	-15.04	24.86
P-16	-21.08	11.14	10.14	6.48	W14x48	-14.40	24.53
P-17	-21.04	11.45	10.45	6.65	W14x48	-14.40	24.85
P-18	-21.02	11.77	10.77	6.82	W14x48	-14.40	25.17
P-19	-21.00	12.07	11.07	7.16	W14x48	-13.72	24.78
P-20	-21.00	12.34	11.34	7.33	W14x48	-13.72	25.06
P-21	-21.00	12.61	11.61	7.50	W14x48	-13.72	25.33
P-22	-21.00	12.86	11.86	7.84	W14x48	-13.04	24.90
P-23	-21.00	13.08	12.08	8.01	W14x48	-13.04	25.12
P-24	-21.00	13.30	12.30	8.18	W14x48	-13.04	25.34
P-25	-21.00	13.48	12.48	8.52	W14x48	-11.86	24.35
P-26	-21.00	13.63	12.63	8.69	W14x48	-11.86	24.50
P-27	-21.00	13.78	12.78	8.86	W14x48	-11.86	24.65
P-28	-21.00	13.90	12.90	9.20	W14x48	-11.18	24.08
P-29	-21.00	13.98	12.98	9.37	W14x48	-11.18	24.16
P-30	-21.00	14.06	13.06	9.54	W14x48	-11.18	24.24
P-31	-21.00	14.14	13.14	9.82	W14x48	-10.50	23.64
P-32	-21.00	14.22	13.22	9.92	W14x48	-10.50	23.72
P-33	-21.00	14.30	13.30	10.03	W14x48	-10.50	23.80
P-34	-21.17	14.38	13.38	10.09	W10x33	-6.62	20.00
P-35	-21.17	14.46	13.46	10.04	W10x33	-6.62	20.08
P-36	-21.17	14.54	13.54	10.00	W10x33	-6.62	20.16
P-37	-21.17	13.90	12.90	9.87	W10x33	-6.62	19.52
P-38	-21.17	13.78	12.78	9.78	W10x33	-6.62	19.40
P-39	-21.17	13.67	12.67	9.70	W10x33	-6.62	19.29

*Offset from ℄ Ramp 43D

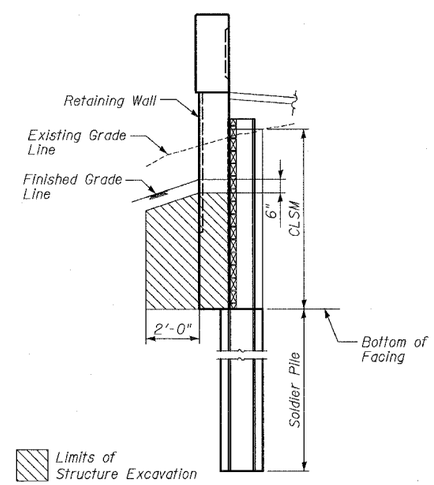

LIMITS OF STRUCTURE EXCAVATION

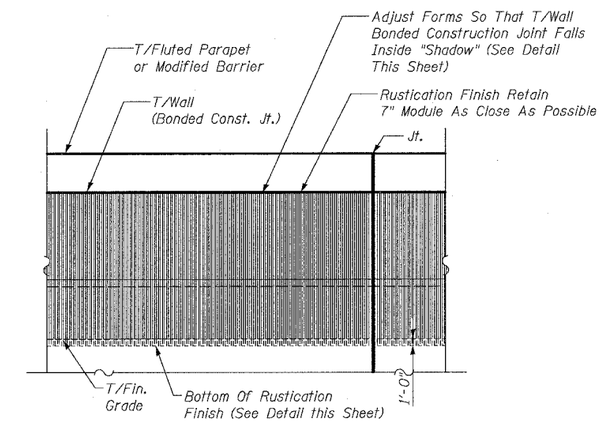

FRONT FACE ELEVATION OF RETAINING WALL

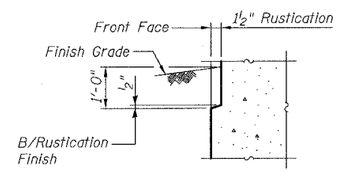

BOTTOM OF RUSTICATION FINISH @ FINISHED GRADE

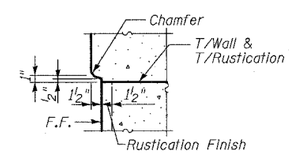

TOP OF RUSTICATION FINISH

NOTES

1. All piles have drilled shaft dia = 2'-0".
2. For excavations and/or embankments outside limits indicated see Roadway Plans and schedules.
3. Provide Pourous Granular Embankment (Special) behind wall (2'-0" min.) from existing or excavated ground line to bottom of Concrete Median Surface 5" (Modified).

BILL OF MATERIAL

Item	Unit	Quantity
Furnishing Soldier Piles (W Sections)	Foot	874
Drilling and Setting Soldier Piles (In Soil)	Cu. Ft.	2,452

SHEET 4 OF 9

REVISIONS	
NAME	DATE
REVISED	06/15/06
ADDENDUM 2	8/04/06

ILLINOIS DEPARTMENT OF TRANSPORTATION

F.A.I. 94/90 (DAN RYAN EXPRESSWAY)

GARFIELD BLVD TO 31ST STREET (NB LOCAL LANES)

RETAINING WALL N-43S-R
PILE LAYOUT

SCALE: NTS — DRAWN BY: MTR

DATE: JUNE 9, 2006 — CHECKED BY: BLU

BOWMAN, BARRETT & ASSOCIATES INC.
CONSULTING ENGINEERS
Chicago, Illinois
312.228.0100
www.bbandainc.com

N:\66D\acad\cdk\N-DR-RET AINING WALLS\66D_JBSPLN435R.dgn

12:26:10 PM

8/4/2006

F.A.I.	SECTION	COUNTY	TOTAL SHEETS	SHEET NO.
94/90	*	COOK	565	410
STA.		TO STA.		
FED. ROAD DIST. NO.	ILLINOIS	FED. AID PROJECT		

62301 *(2021-922 PT2 ETC 2324.6-1P) R-10

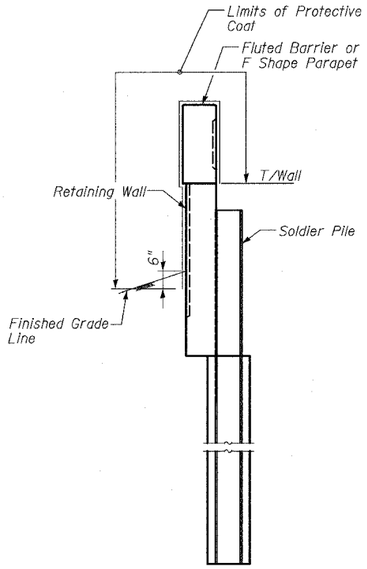

DETAIL OF LIMITS OF PROTECTIVE COAT

Apply Protective Coat to Front Face only when less than 25'-0" to Ramp E.O.P.

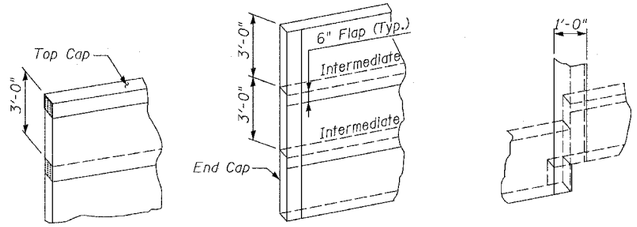

TOP COURSE — HORIZONTAL SECTION AND SEAM — VERTICAL SPLICE

GEOCOMPOSITE WALL DRAIN DETAILS

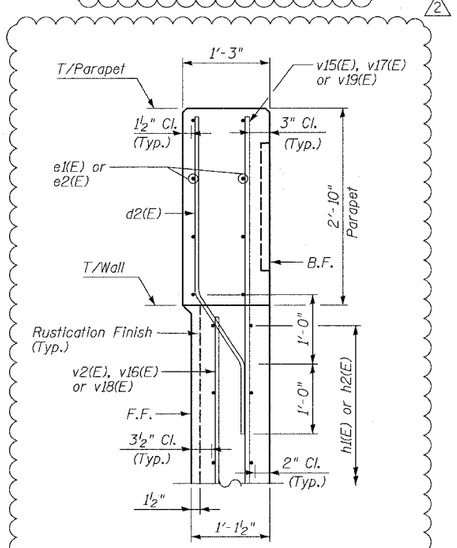

PARAPET DETAIL

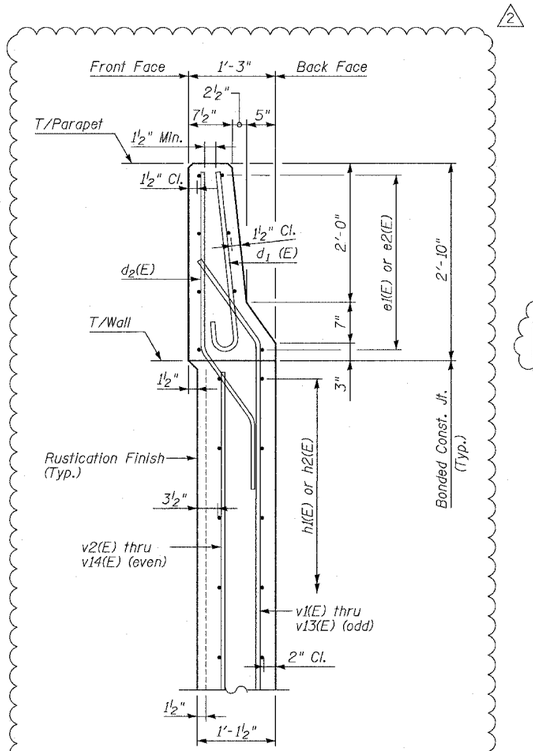

SECTION THRU F-SHAPE PARAPET

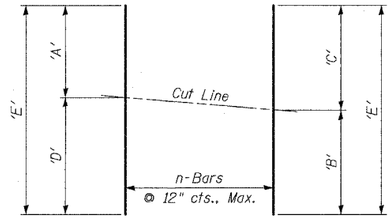

* BAR CUTTING DIAGRAM

* Order bars v3(E) thru v8(E) and v14(E) thru v18(E) fulll length, cut as shown and use remainder where indicated. Bend bars after cutting as required.

TABLE OF DIMENSIONS

Bar	'A'	'B'	'C'	'D'	'E'	n
v3(E)	5'-5"	5'-7"	5'-7"	5'-9"	11'-2"	12
v4(E)	3'-8"	3'-10"	3'-10"	4'-0"	7'-8"	12
v5(E)	5'-9"	5'-11"	5'-11"	6'-1"	11'-10"	12
v6(E)	4'-0"	4'-2"	4'-2"	4'-4"	8'-4"	12
v7(E)	6'-1"	6'-2"	6'-3"	6'-4"	12'-5"	12
v8(E)	4'-4"	4'-5"	4'-6"	4'-7"	8'-11"	12
v14(E)	4'-9"	4'-8"	4'-7"	4'-6"	9'-3"	12
v15(E)	7'-4"	7'-2"	7'-1"	6'-11"	14'-3"	12
v16(E)	4'-6"	4'-4"	4'-3"	4'-1"	8'-7"	12
v17(E)	6'-11"	6'-9"	6'-8"	6'-6"	13'-5"	12
v18(E)	4'-1"	3'-11"	3'-10"	3'-8"	7'-9"	12

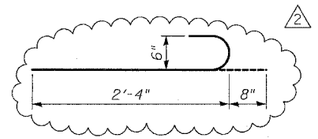

BAR d1(E)

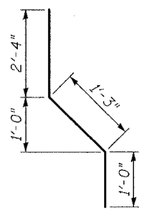

BAR d2(E)

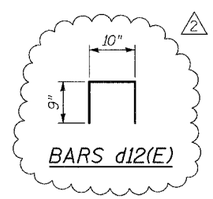

BARS d12(E)

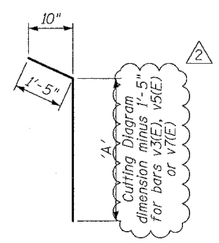

BARS v1(E), v9(E) & v11(E)

Bar	'A'
v1(E)	4'-0"
v9(E)	5'-0"
v11(E)	5'-1"

BILL OF MATERIAL

	Bar	No.	Size	Length	Shape
	d1(E)	212	#6	3'-0"	
	d2(E)	325	#5	4'-7"	
	d3(E)	12	#6	5'-5"	
	d12(E)	26	#5	2'-4"	
	e1(E)	40	#5	23'-8"	
	e2(E)	64	#5	26'-2"	
	h1(E)	54	#5	23'-8"	
	h2(E)	84	#5	26'-2"	
	v1(E)	75	#6	5'-5"	
	v2(E)	125	#5	3'-8"	
*	v3(E)	12	#6	11'-2"	
*	v4(E)	12	#5	7'-8"	
*	v5(E)	12	#6	11'-10"	
*	v6(E)	12	#5	8'-4"	
*	v7(E)	12	#6	12'-5"	
*	v8(E)	12	#5	8'-11"	
	v9(E)	37	#6	6'-5"	
	v10(E)	25	#5	4'-8"	
	v11(E)	25	#6	6'-6"	
	v12(E)	25	#5	4'-9"	
	v13(E)	12	#6	4'-6"	
*	v14(E)	12	#5	9'-3"	
*	v15(E)	12	#6	14'-3"	
*	v16(E)	12	#5	8'-7"	
*	v17(E)	12	#6	13'-5"	
*	v18(E)	12	#5	7'-9"	
	V19(E)	50	#6	6'-6"	
	Reinforcement Bars, Epoxy Coated			Pound	13,280
	Concrete Structures			Cu. Yd.	55.2
	Concrete Superstructure			Cu. Yd.	31.7
	Chain Link Fence, 42" Attached to Structure (Special)			Foot	95
	Rustication Finish			Sq. Ft.	1136
	Protective Coat			Sq. Yd.	168

SHEET 5 OF 9

REVISIONS	
NAME	DATE
REVISED	6/21/06
ADDENDUM 2	8/04/06

ILLINOIS DEPARTMENT OF TRANSPORTATION

F.A.I. 94/90 (DAN RYAN EXPRESSWAY)
GARFIELD BLVD TO 31ST STREET (NB LOCAL LANES)

RETAINING WALL N-43S-R
BILL OF MATERIAL

SCALE: NTS — DRAWN BY: MTR
DATE: JUNE 9, 2006 — CHECKED BY: BLU

BOWMAN, BARRETT & ASSOCIATES INC.
CONSULTING ENGINEERS
Chicago, Illinois
312.228.0100
www.bbandainc.com

H:\660\cadd\civil\N3\RET-WLL\N3 WALLS\660_N3swrN43SR_D2.dgn
8/4/2006 2:25:04 PM

F.A.I.	SECTION	COUNTY	TOTAL SHEETS	SHEET NO.
94/90	*	COOK	565	411
STA.		TO STA.		
FED. ROAD DIST. NO.	ILLINOIS	FED. AID PROJECT		

62301 *(2021-922 PT2 ETC 2324.6-1P) R-10

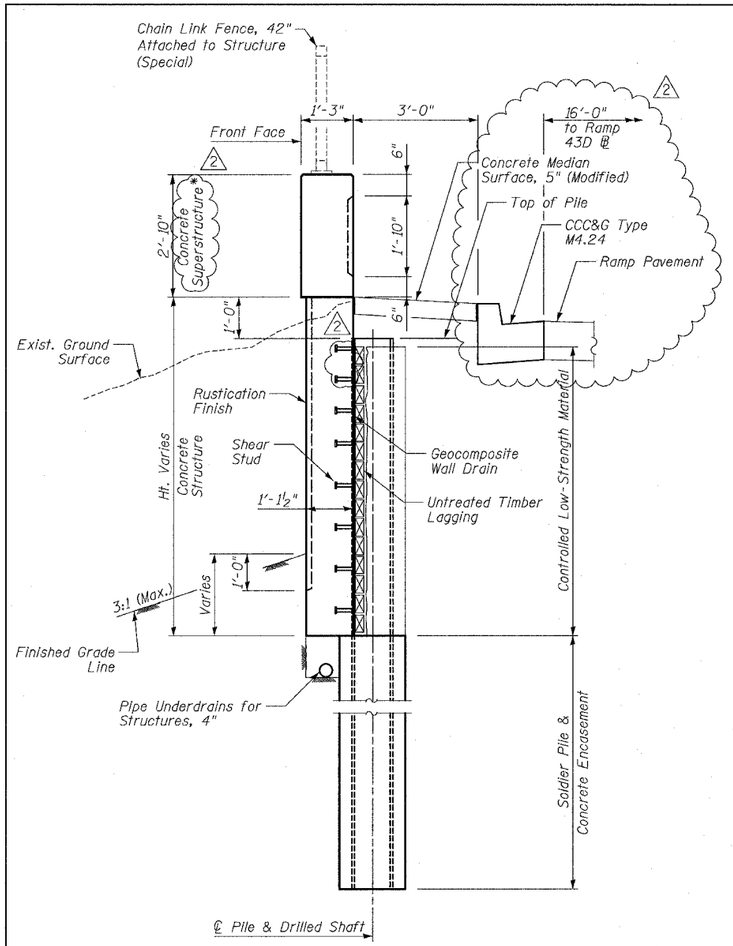

TYP. SECTION THRU PROPOSED WALL

*Includes portion with F-Shape Parapet

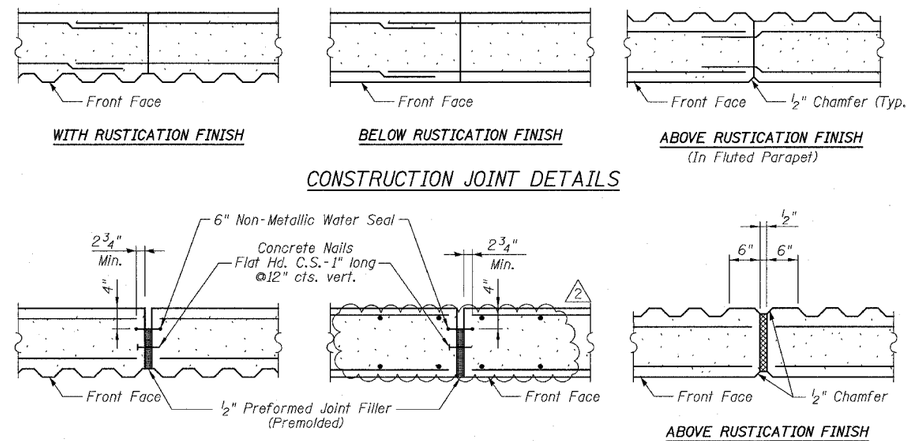

EXPANSION JOINT DETAILS

Cost of P.J.F., Water Seal and Concrete Nails included with Concrete Structures.

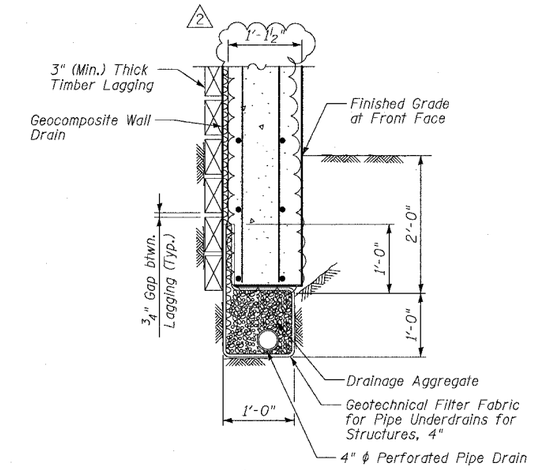

PIPE UNDERDRAIN DETAIL BETWEEN SOLDIER PILES

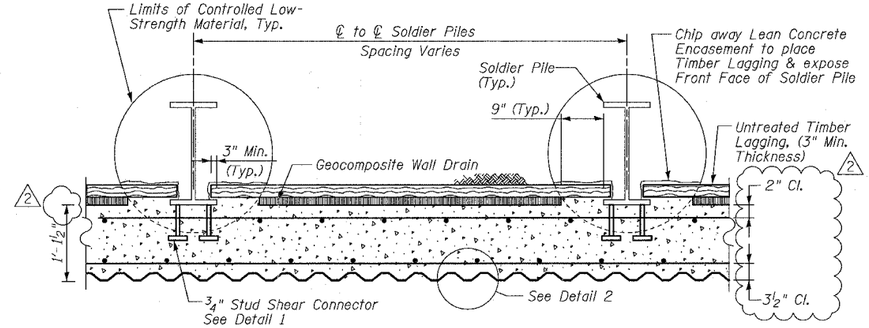

SECTION THRU SOLDIER PILE WALL

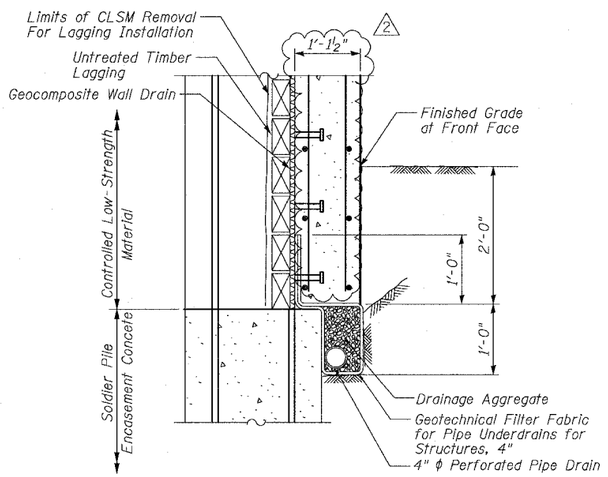

PIPE UNDERDRAIN DETAIL AT SOLDIER PILES

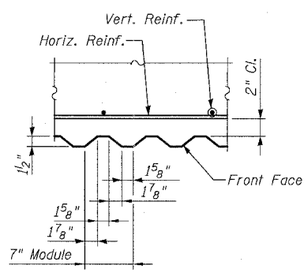

DETAIL 1

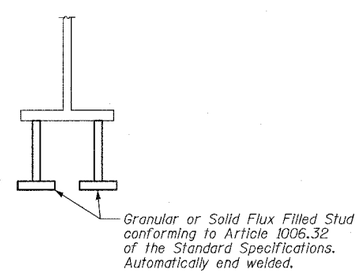

DETAIL 2

SHEET 6 OF 9

REVISIONS	
NAME	DATE
REVISED	06/21/06
ADDENDUM 2	8/04/06

ILLINOIS DEPARTMENT OF TRANSPORTATION

F.A.I. 94/90 (DAN RYAN EXPRESSWAY)

GARFIELD BLVD TO 31ST STREET (NB LOCAL LANES)

RETAINING WALL N-43S-R
MISCELLANEOUS DETAILS

SCALE: NTS — DRAWN BY: MTR

DATE: JUNE 9, 2006 — CHECKED BY: BLU

BOWMAN, BARRETT & ASSOCIATES INC.
CONSULTING ENGINEERS
Chicago, Illinois
312.228.0100
www.bbandainc.com

N:\96COMP\96COMP\96PROJECT\RAINING WALLS\96COMP43SRD.DGN 8/14/2006 11:49:36 AM

F.A.I.	SECTION	COUNTY	TOTAL SHEETS	SHEET NO.
94/90	*	COOK	565	412
STA.		TO STA.		
FED. ROAD DIST. NO.	ILLINOIS	FED. AID PROJECT		

62301 *(2021-922 PT2 ETC 2324.6-1P) R-10

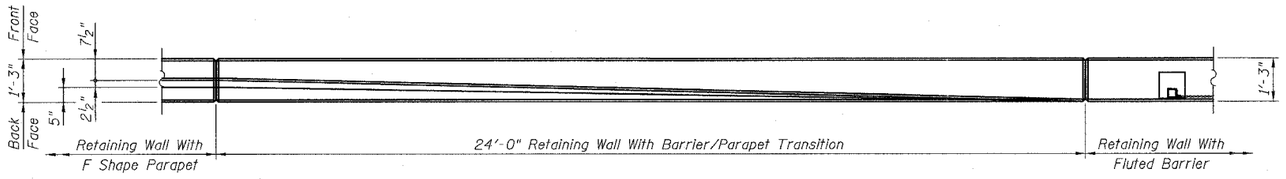

PLAN

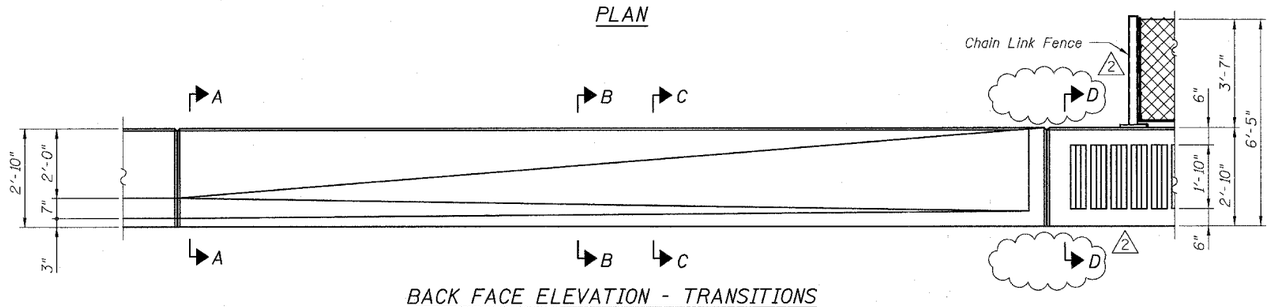

BACK FACE ELEVATION - TRANSITIONS

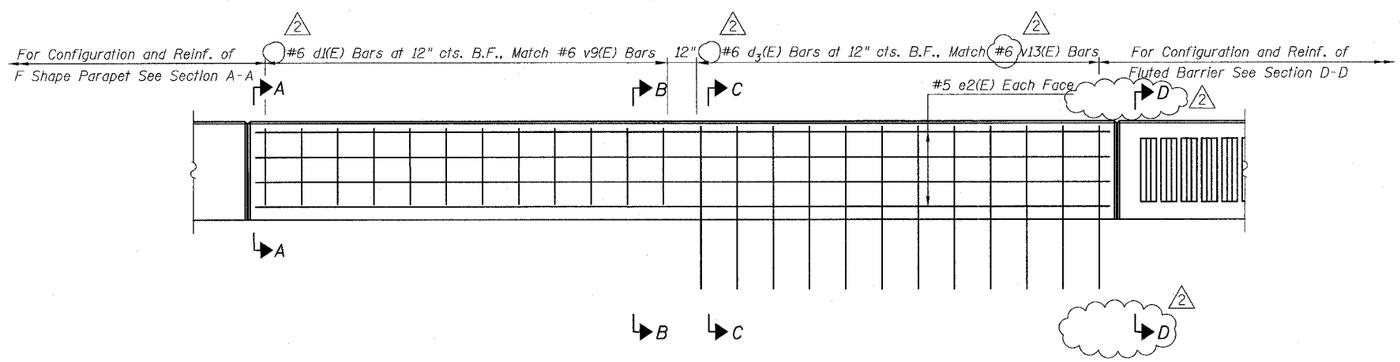

BACK FACE ELEVATION - REINFORCEMENT

(d_2(E) and v(E) bars not shown for clarity)

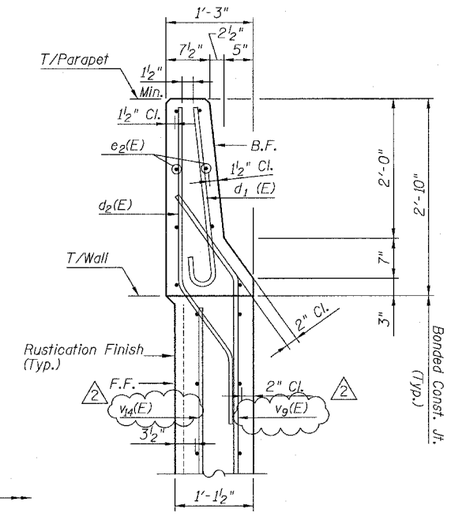

SECTION A-A

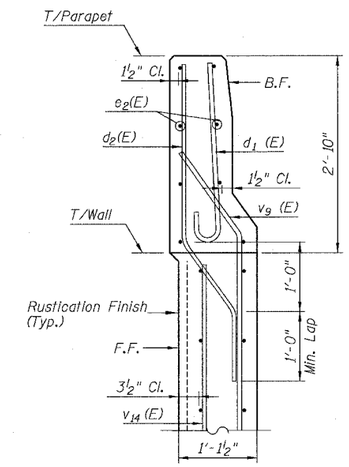

SECTION B-B

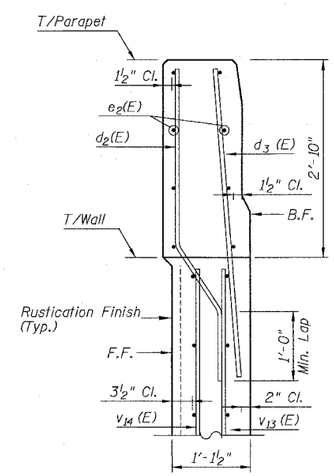

SECTION C-C

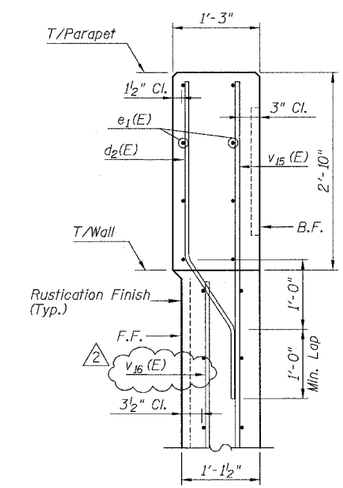

SECTION D-D

NOTES:

1. For Bill of Bars & Bar Bend Details, See Sheet 5.

REVISIONS	
NAME	DATE
REVISED	06/20/06
ADDENDUM 2	8/04/06

SHEET 7 OF 9

ILLINOIS DEPARTMENT OF TRANSPORTATION

F.A.I. 94/90 (DAN RYAN EXPRESSWAY)

GARFIELD BLVD TO 31ST STREET (NB LOCAL LANES)

RETAINING WALL N-43S-R
PARAPET TRANSITION

SCALE: NTS — DRAWN BY: MTR

DATE: JUNE 9, 2006 — CHECKED BY: BLU

BOWMAN, BARRETT & ASSOCIATES INC.
CONSULTING ENGINEERS
Chicago, Illinois
312.228.0100
www.bbandainc.com

N:\BBCcadd\CIVIL\BRIDGE\RETAINING WALLS\62301_JBSMCM43SFL02.dgn

11:50:13 AM 8/4/2006

F.A.I.	SECTION	COUNTY	TOTAL SHEETS	SHEET NO.
94/90	*	COOK	565	420
STA.		TO STA.		
FED. ROAD DIST. NO.	ILLINOIS	FED. AID PROJECT		

62301 *(2021-922 PT2 ETC 2324.6-1P) R-10

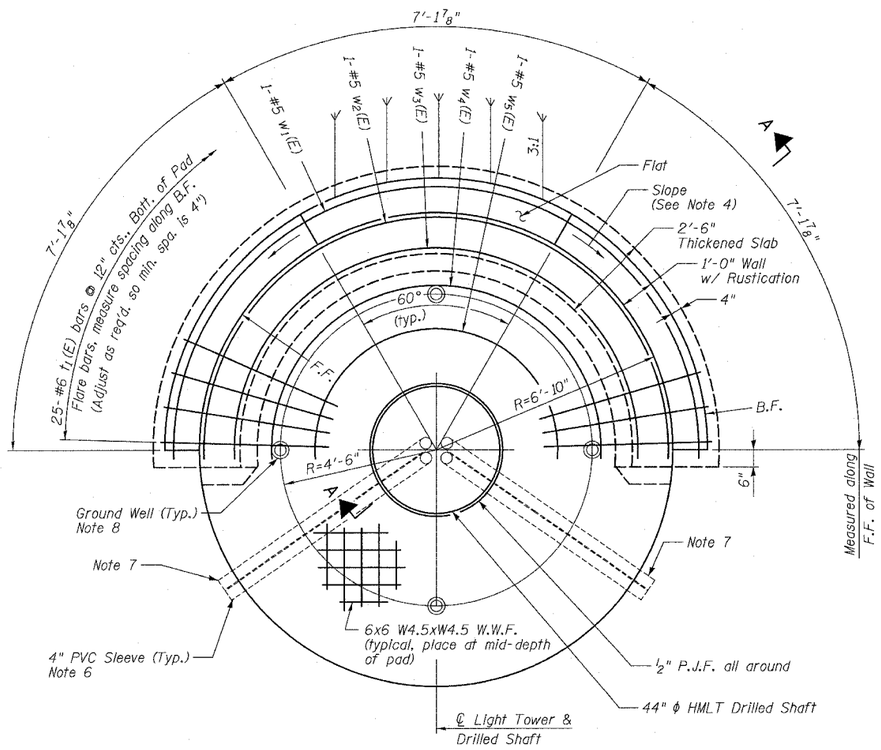

PLAN VIEW

Place Bars w_1(E) thru w_5(E) @ 12" cts., Bott. of Pad

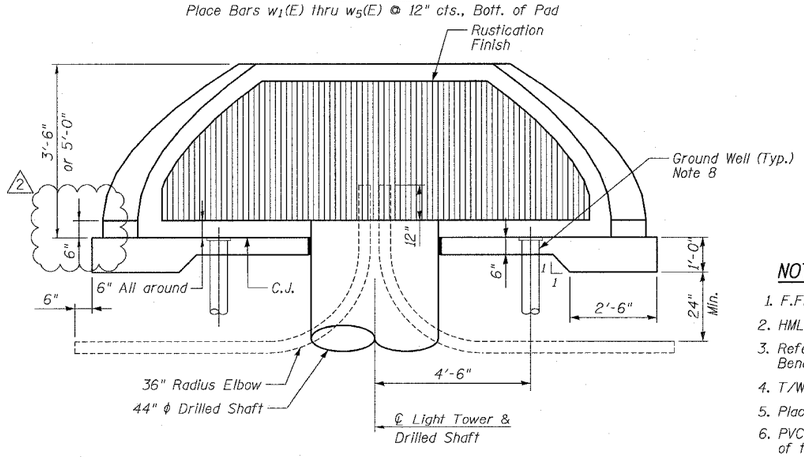

ELEVATION VIEW

(HMLT not shown for clarity)

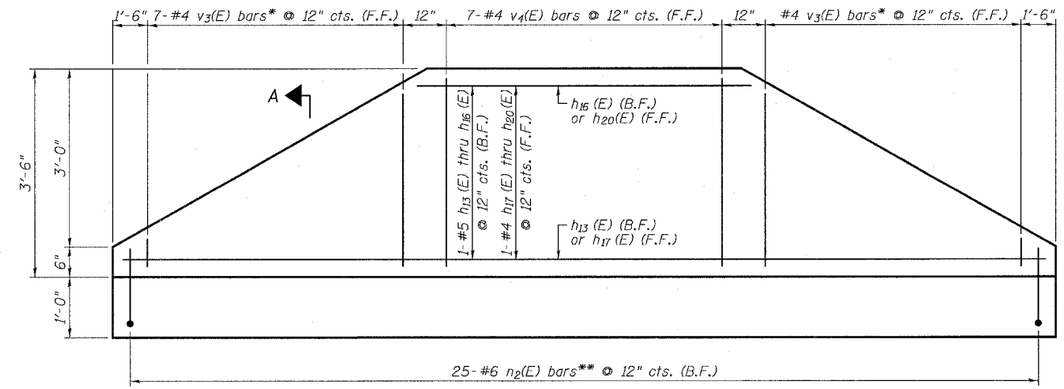

* Cut to fit, use remainder of bars at opposite end of wall. See Cutting Diagram, Sheet SD7.

** Cut to fit where necessary, discard excess.

3'-6" RETAINING WALL ELEVATION (PROJECTED)

(Looking at F.F.)

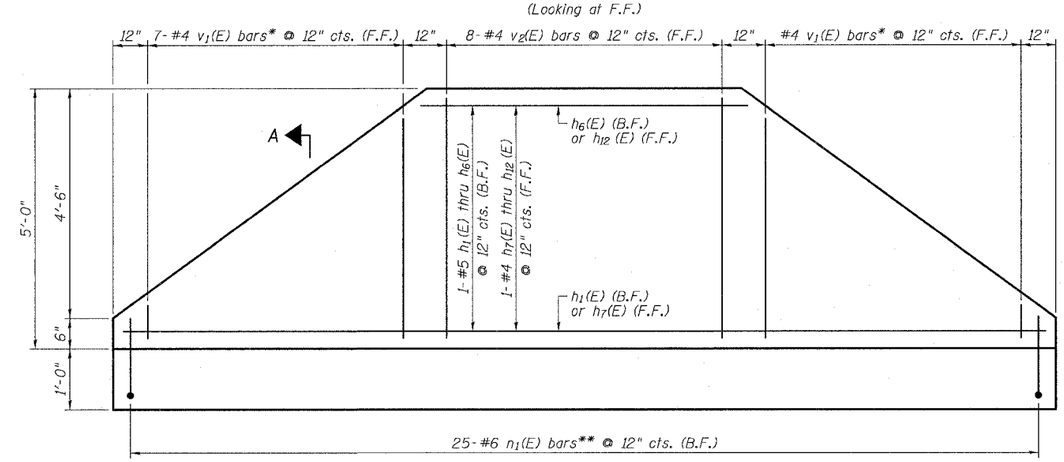

* Cut to fit, use remainder of bars at opposite end of wall. See Cutting Diagram, Sheet SD7.

** Cut to fit where necessary, discard excess.

5'-0" RETAINING WALL ELEVATION (PROJECTED)

(Looking at F.F.)

NOTES

1. F.F. and B.F. denote Front Face and Back Face, respectively.
2. HMLT denotes High Mast Light Tower.
3. Refer to HMLT Service Pad & Retaining Wall Details 2 for Bar Bending Diagrams, Bill of Material, Bar Sections and Details.
4. T/Wall slope is constant along the arc of any given radius.
5. Place horizontal tails of n_1 (E) & n_2(E) bars radially.
6. PVC sleeves must be extended 6 inches beyond the edge of the concrete pad.
7. PVC sleeve for CCTV camera power feed (future). Sleeve must be capped unless noted otherwise on the plans.
8. Install ground wells 4'-6" as measured from centerline of the HMLT to centerline of the well. Adjust service pad reinforcement to miss wells. If existing ground wells present, adjust and incorporate into service pad as directed by the Engineer. Cost included with Light Tower Service Pad, 6" or Light Tower Service Pad, Special as appropriate.

BOWMAN, BARRETT & ASSOCIATES INC.
CONSULTING ENGINEERS
Chicago, Illinois
312.228.0100
www.bbandainc.com

SHEET SD6 OF SD11

REVISIONS	
NAME	DATE
2 ADDENDUM 2	8/04/06

ILLINOIS DEPARTMENT OF TRANSPORTATION

F.A.I. 94/90 (DAN RYAN EXPRESSWAY)

GARFIELD BLVD TO 31ST STREET (NB LOCAL LANES)

HIGH MAST LIGHT TOWER SERVICE PAD & RETAINING WALL DETAILS 1

SCALE: NTS — DRAWN BY: MTR

DATE: JUNE 9, 2006 — CHECKED BY: BLU

8/14/2006 12:54:18 PM

K:\660\cad\CNT\NB\RETAINING WALLS\660_IBSHADET_D1.dgn

F.A.I.	SECTION	COUNTY	TOTAL SHEETS	SHEET NO.
94/90	*	COOK	565	421
STA.		TO STA.		
FED. ROAD DIST. NO.	ILLINOIS	FED. AID PROJECT		

62301 *(2021-922 PT2 ETC 2324.6-1P) R-10

N:\660\cad\civil\NB\RET-MNING WALLS\660_BSHMDET_02.dgn

BILL OF MATERIAL

Light Tower Service Pad, Special with 3'-6" Wall (Note 4)

Bar	No.	Size	Length	Shape
h_{13} (E)	1	#5	23'-6"	
h_{14} (E)	1	#5	18'-11"	
h_{15} (E)	1	#5	13'-7"	
h_{16} (E)	1	#5	8'-4"	
h_{17} (E)	1	#4	22'-1"	
h_{18} (E)	1	#4	17'-9"	
h_{19} (E)	1	#4	12'-9"	
h_{20} (E)	1	#4	7'-10"	
n_2 (E)	25	#6	5'-10"	
t_1 (E)	25	#6	5'-1"	
* v_3 (E)	7	#4	3'-10"	
v_4 (E)	7	#4	3'-2"	
w_1 (E)	1	#5	24'-4"	
w_2 (E)	1	#5	21'-7"	
w_3 (E)	1	#5	18'-10"	
w_4 (E)	1	#5	15'-5"	
w_5 (E)	1	#5	11'-6"	
Concrete Structures			Cu. Yd.	2.1
Reinforcement Bars, Epoxy Coated			Pound	140
Protective Coat			Sq. Yd.	25
Rustication Finish			Sq. Ft.	34

BILL OF MATERIAL

Light Tower Service Pad, Special with 5'-0" Wall (Note 4)

Bar	No.	Size	Length	Shape
h_1 (E)	1	#5	23'-6"	
h_2 (E)	1	#5	20'-10"	
h_3 (E)	1	#5	17'-8"	
h_4 (E)	1	#5	14'-6"	
h_5 (E)	1	#5	11'-4"	
h_6 (E)	1	#5	8'-2"	
h_7 (E)	1	#4	22'-1"	
h_8 (E)	1	#4	19'-7"	
h_9 (E)	1	#4	16'-7"	
h_{10} (E)	1	#4	13'-7"	
h_{11} (E)	1	#4	10'-8"	
h_{12} (E)	1	#4	7'-8"	
n_1 (E)	25	#6	7'-4"	
t_1 (E)	25	#6	5'-1"	
* v_1 (E)	7	#4	5'-0"	
v_2 (E)	8	#4	4'-8"	
w_1 (E)	1	#5	24'-4"	
w_2 (E)	1	#5	21'-7"	
w_3 (E)	1	#5	18'-10"	
w_4 (E)	1	#5	15'-5"	
w_5 (E)	1	#5	11'-6"	
Concrete Structures			Cu. Yd.	2.9
Reinforcement Bars, Epoxy Coated			Pound	210
Protective Coat			Sq. Yd.	28
Rustication Finish			Sq. Ft.	54

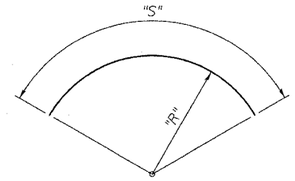

Bar	"R"	"S"
h_1 (E)	7'-7"	23'-6"
h_2 (E)	7'-7"	20'-10"
h_3 (E)	7'-7"	17'-8"
h_4 (E)	7'-7"	14'-6"
h_5 (E)	7'-7"	11'-4"
h_6 (E)	7'-7"	8'-2"
h_7 (E)	7'-1½"	22'-1"
h_8 (E)	7'-1½"	19'-7"
h_9 (E)	7'-1½"	16'-7"
h_{10} (E)	7'-1½"	13'-7"
h_{11} (E)	7'-1½"	10'-8"
h_{12} (E)	7'-1½"	7'-8"
h_{13} (E)	7'-7"	23'-6"

Bar	"R"	"S"
h_{14} (E)	7'-7"	18'-11"
h_{15} (E)	7'-7"	13'-7"
h_{16} (E)	7'-7"	8'-4"
h_{17} (E)	7'-1½"	22'-1"
h_{18} (E)	7'-1½"	17'-9"
h_{19} (E)	7'-1½"	12'-9"
h_{20} (E)	7'-1½"	7'-10"
w_1 (E)	7'-7"	24'-4"
w_2 (E)	6'-8"	21'-7"
w_3 (E)	5'-10"	18'-10"
w_4 (E)	4'-9"	15'-5"
w_5 (E)	3'-6"	11'-6"

Note: "R" and "S" measured along bar ℄

BARS w_1(E) thru w_5(E) & h_1(E) thru h_{20}(E)

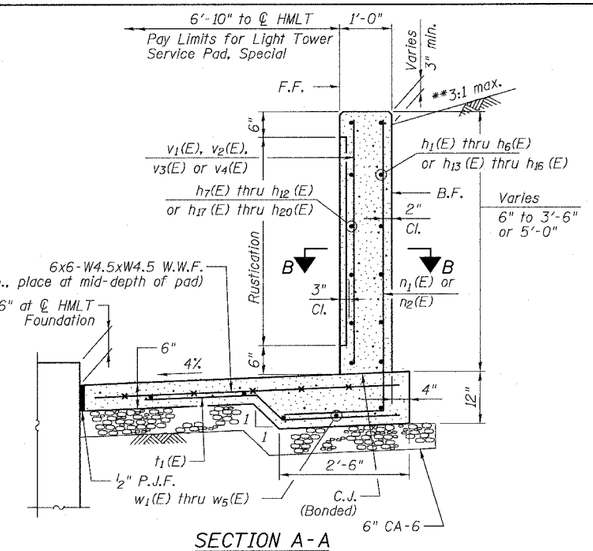

SECTION A-A

**See Roadway Cross Section Shts.

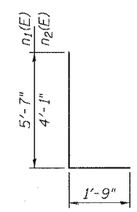

BARS n_1(E) & n_2(E)

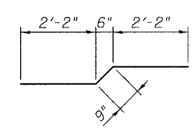

BAR t_1(E)

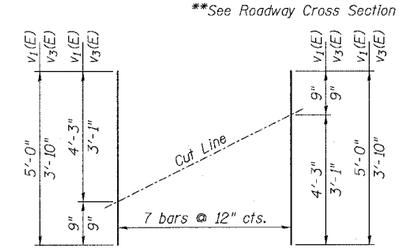

Order v_1(E) & v_3(E) bars full length and cut to fit as shown. Use remainder of bars as indicated on plans.

* CUTTING DIAGRAM

Bars v_1(E) & v_3(E)

NOTES

1. F.F. and B.F. denote Front Face and Back Face, respectively.
2. HMLT denotes High Mast Light Tower.
3. For location of High Mast Light Tower Foundations, see Roadway Lighting Plan sheets.
4. Bars n_1(E), n_2(E), t_1(E) and w_1(E) thru w_5(E) will not be measured and paid separately but will be included in the cost of Light Tower Service Pad, Special. See Special Provisions.
5. See IDOT Standard Drawing BE501 for additional High Mast Light Tower foundation and ground well details.
6. Reinforcement Bars designated (E) shall be epoxy coated.
7. Refer to High Mast Light Tower Service Pad & Retaining Wall Details 1 for location and orientation of conduit sleeves and grounding wells.
8. Contractor shall maintain integrity of Frontage Roads as may be required in excavating for HMLT service pad walls.
9. Provide Protective Coat to top, front face and ends of walls and to the top of the concrete service pad.

TOTAL BILL OF MATERIAL

Item	Unit	Total
Light Tower Service Pad, 6"	Sq. Ft.	816
Light Tower Service Pad, Special	Sq. Ft.	1,496
Structure Excavation	Cu. Yd.	298
Concrete Structures	Cu. Yd.	27.1
Reinforcement Bars, Epoxy Coated	Pound	1,950
Rustication Finish	Sq. Ft.	474
Protective Coat	Sq. Yd.	290

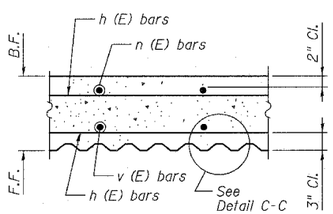

SECTION B-B

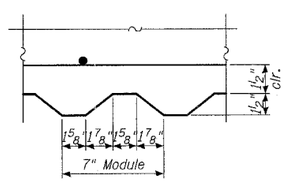

DETAIL C-C

HMLT SERVICE PAD/RETAINING WALL SCHEDULE

HMLT I.D.	Service Pad/Retaining Wall Requirements
7 UGH1	Light Tower Service Pad w/ 5'-0" Wall
7 UGH3	Light Tower Service Pad, No Wall
7 VMN3	Light Tower Service Pad, No Wall
7 VMN2	Light Tower Service Pad w/ 3'-6" Wall
7 VEF3	Light Tower Service Pad w/ 5'-0" Wall
7 VEF2	Light Tower Service Pad w/ 5'-0" Wall
7 VEF1	Light Tower Service Pad w/ 5'-0" Wall
7 VGH1	Light Tower Service Pad w/ 5'-0" Wall
7 VGH2	Light Tower Service Pad, No Wall
7 VGH3	Light Tower Service Pad, No Wall
7 VHG4	Light Tower Service Pad w/ 3'-6" Wall
7 WEF6	Light Tower Service Pad, No Wall
7 WEF4	Light Tower Service Pad, No Wall
7 WEF2	Light Tower Servce Pad w/ 3'-6" Wall
7 WGH3	Light Tower Service Pad w/ 3'-6" Wall
7 WGH4	Light Tower Service Pad w/ 3'-6" Wall
7 WGH5	Light Tower Service Pad w/ 3'-6" Wall

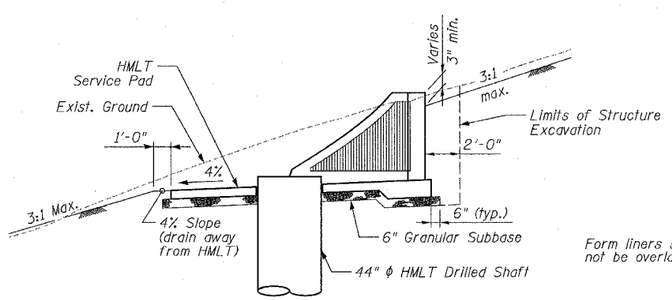

SECTION THRU EMBANKMENT

(At Typ. Tower Location)
HMLT not shown for clarity

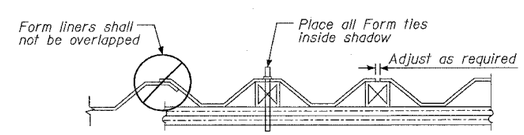

SUGGESTED FORMWORK DETAIL

REVISIONS	
NAME	DATE
ADDENDUM 2	8/04/06

SHEET SD7 OF SD11

ILLINOIS DEPARTMENT OF TRANSPORTATION

F.A.I. 94/90 (DAN RYAN EXPRESSWAY)

GARFIELD BLVD TO 31ST STREET (NB LOCAL LANES)

HIGH MAST LIGHT TOWER SERVICE PAD & RETAINING WALL DETAILS 2

SCALE: NTS — DRAWN BY: MTR

DATE: JUNE 9, 2006 — CHECKED BY: BLU

BOWMAN, BARRETT & ASSOCIATES INC.
CONSULTING ENGINEERS
Chicago, Illinois
312.228.0100
www.bbandainc.com

8/14/2006 12:51:46 PM

F.A.I.	SECTION	COUNTY	TOTAL SHEETS	SHEET NO.
94/90	•	COOK	565	424
STA.		TO STA.		
FED. ROAD DIST. NO.	ILLINOIS	FED. AID PROJECT		

62301 •(2021-922 PT2 ETC 2324.6-1P) R-10

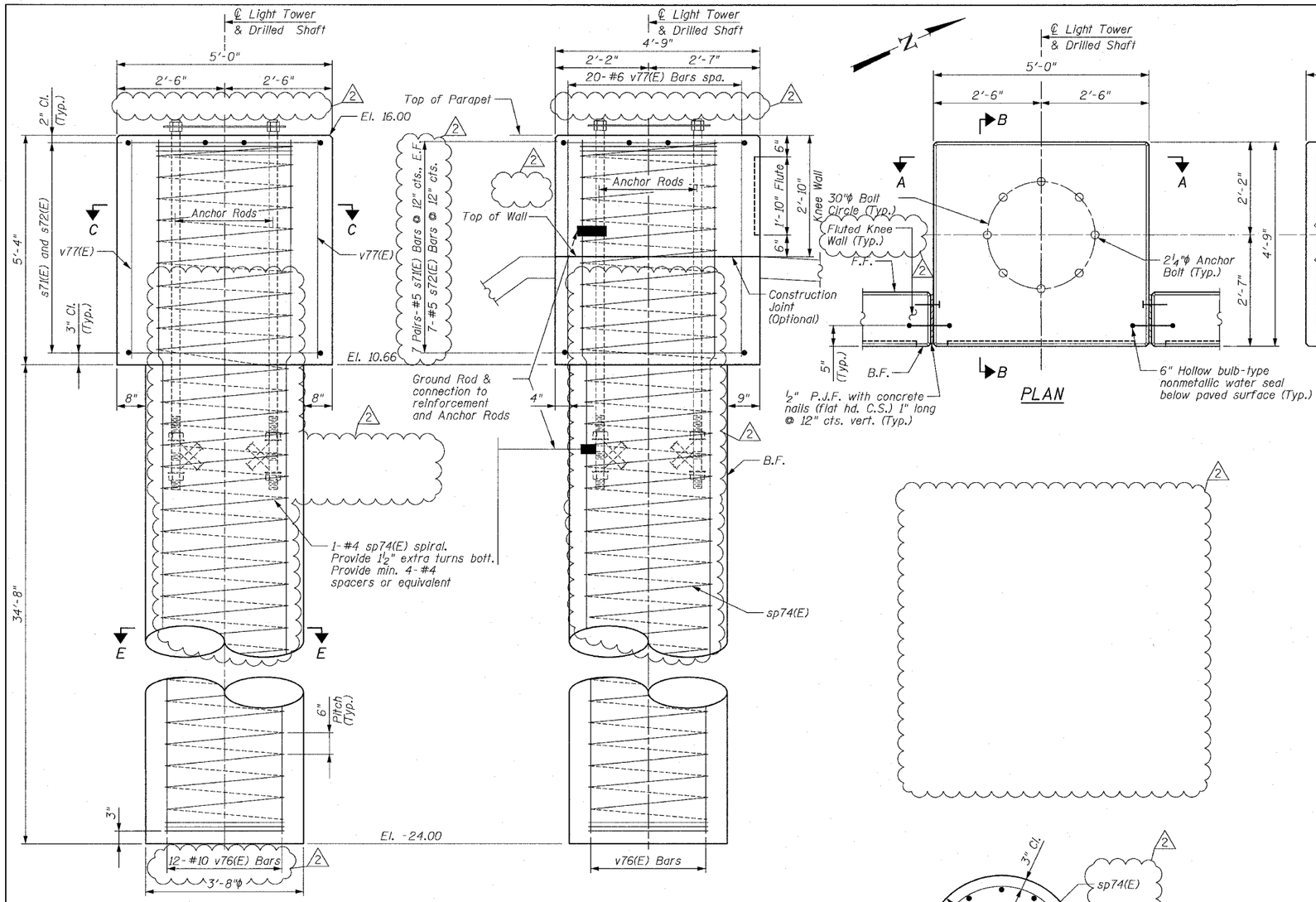

Bar	No.	Size	Length	Shape
s71(E)	28	#5	3'-11"	
s72(E)	7	#5	18'-10"	
**sp74(E)	1	#4	39'-6"	
v76(E)	12	#10	39'-8"	
v77(E)	20	#6	5'-0"	
Reinforcement Bars, Epoxy Coated *			Pound	2,590
Concrete Structures			Cu. Yd.	2.2
Concrete Superstructure			Cu. Yd.	2.5
Drilled Shaft in Soil, 44"			Foot	35

Reinforced Bars designated (E) shall be epoxy coated.

* Weight includes 4-#4 spacer bars
** Length indicates height of spiral

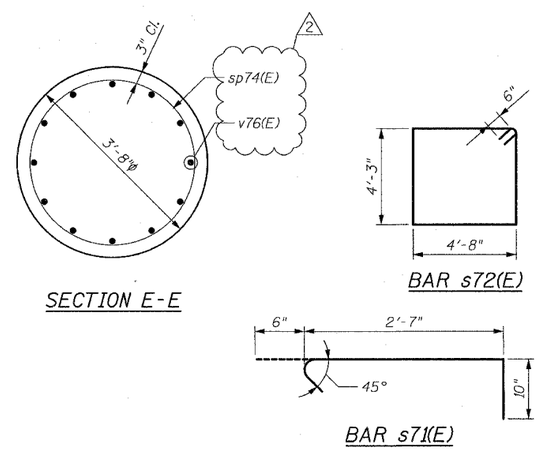

Notes:

1. The design loads are based on AASHTO Standard Specifications of Structural Supports for Highway Signs, Luminaires and Traffic Signals-2001.
2. Drilled Shafts shall be installed according to IDOT Special Provisions for "Drilled Shafts".
3. In constructing the drilled shafts, the Contractor may encounter pavements, fill, foundations, abandoned utilities, boulders and other obstructions. See Special Provisions for "Drilled Shaft in Soil, 44".
4. If field conditions dictate a shorter shaft length than shown, the Contractor shall cut the reinforcement bars to their required length. If the shaft length is longer than indicated, the Contractor shall extend the reinforcement by providing additional reinforcement of equal size and lapping with the minimum lap length shown.
5. At all locations where reinforcement bar laps are not in direct contact, the Contractor shall provide sufficient spacing between the vertical bars equal to the size of the largest concrete aggregate plus ½ inch.
6. Minimum Spiral Lap = 1½ turns
7. Costs of P.J.F., nails and waterseal shall be included with "Concrete Structures".
8. Conduit for HMLT not shown for clarity. See Sheet SD10A for location, layout, number and size of conduit.
9. Cost of anchor rod assembly, conduit, wires and grounding requirements are included with "Concrete Structures" or "Drilled Shaft in Soil, 44"" as appropriate.
10. The Contractor shall pay particular attention to construction tolerances in ensuring proper placement of reinforcement bars, anchor rods and gate hardware. The Contractor shall coordinate with Contract 62733, the HMLT manufacturer and installer, as required, to ensure proper placement and orientation of anchor rods and HMLT. Orientation of HMLT must be coordinated with gate and handhole clearances.

MIN BAR LAP

#4 - 1'-8"
#5 - 2'-2"
#6 - 2'-7"
#10 - 5'-10"

SHEET SD10 OF SD11

REVISIONS	
NAME	DATE
REVISED	6/21/06
ADDENDUM 2	8/04/06

ILLINOIS DEPARTMENT OF TRANSPORTATION

F.A.I. 94/90 (DAN RYAN EXPRESSWAY)
GARFIELD BLVD TO 31ST STREET (NB LOCAL LANES)

KNEE WALL AT RAMP 43D
LIGHT TOWER FOUNDATION DETAILS

SCALE: NTS — DRAWN BY: MTR
DATE: JUNE 9, 2006 — CHECKED BY: BLU

BOWMAN, BARRETT & ASSOCIATES INC.
CONSULTING ENGINEERS
Chicago, Illinois
312.228.0100
www.bbandainc.com

8/4/2006 12:35:43 PM

F.A.I.	SECTION	COUNTY	TOTAL SHEETS	SHEET NO.
94/90	*	COOK	565	424A
STA.		TO STA.		
FED. ROAD DIST. NO.	ILLINOIS	FED. AID PROJECT		

62301 *(2021-922 PT2 ETC 2324.6-1P) R-10

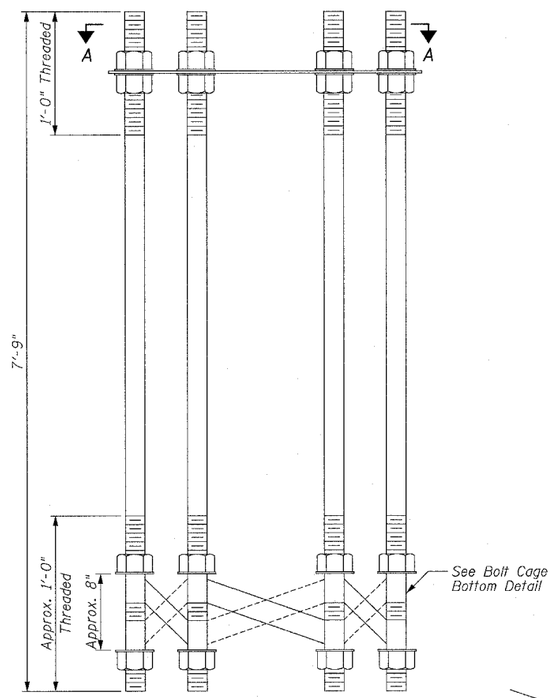

ANCHOR BOLT CAGE

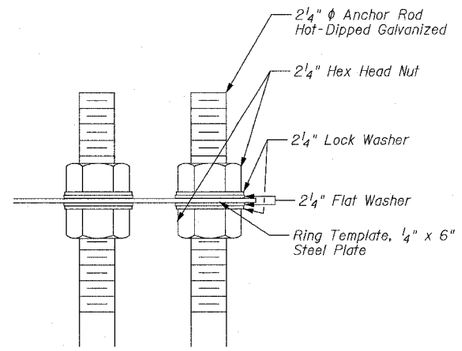

BOLT CAGE TOP

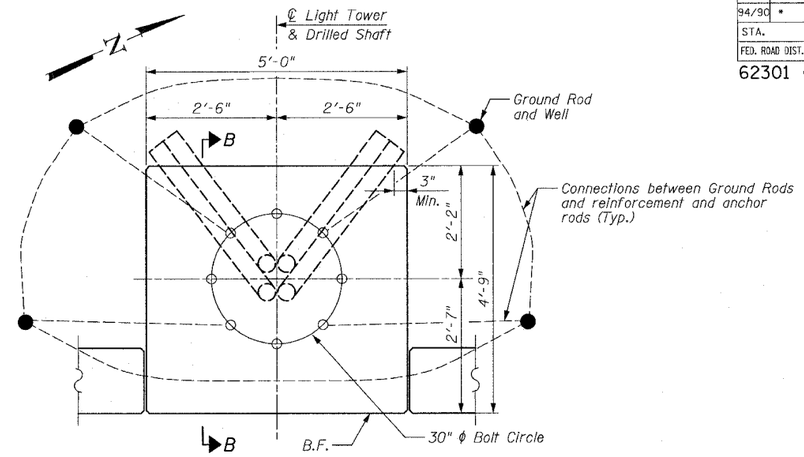

PLAN - CONDUIT PLACEMENT

See Note 10

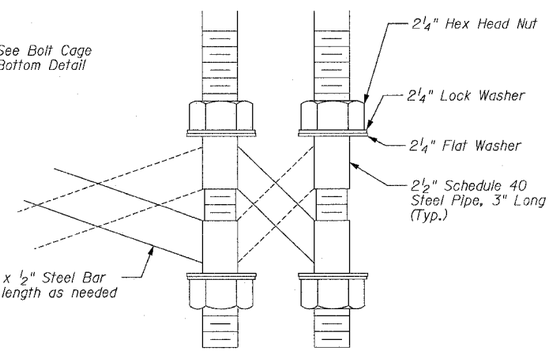

BOLT CAGE BOTTOM

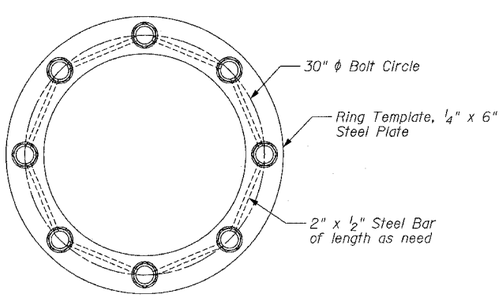

SECTION A-A

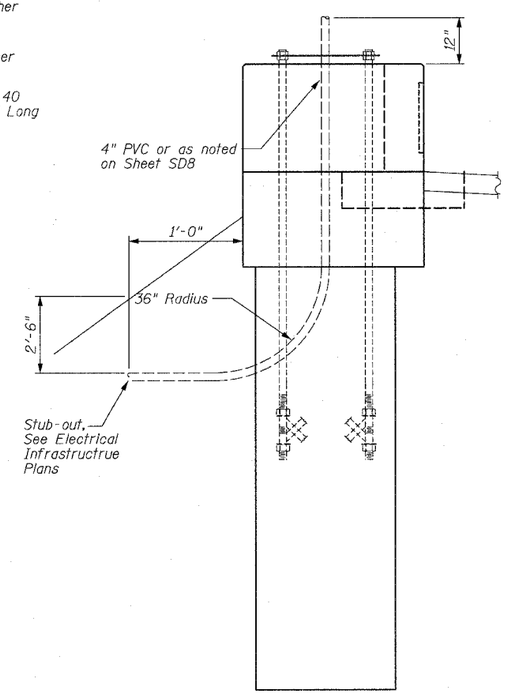

SECTION B-B

Notes:

1. Anchor Rods shall be straight and shall be according to AASHTO M 314 or ASTM F1554, Grade 105 and galvanized according to Article 1006.09.
2. Nuts shall be AASHTO M 291, Class S and washers shall be AASHTO M 293. All nuts and washers shall be hot-dipped galvanized in accordance with AASHTO M 232.
3. Steel Bar and Pipe shall be galvanized in accordance with AASHTO M 111.
4. Anchor Rod information shall be submitted for approval and shall be fully coordinated with tower manufacturer's requirements.
5. The Anchor Rods shall be vertical. No adjustment shall be allowed after the foundation is placed.
6. The gap between the foundation and the base plate shall be enclosed with a stainless steel screen fastened with a stainless steel band. Cost included with "Light Tower" in Contract 62583.
7. The Light Tower shall not be erected until after the concrete has been cured according to Article 1020.13.
8. Two Anchor Rods opposite each other shall have the Anchor Rod threads peened after nuts are installed.
9. See BE500 & BE501 for additional details not shown here. Light Towers and Base ℄ by others.
10. Grounding requirements shall be as shown on IDOT standard BE501. Location of ground rods and grounding attachments to reinforcement bars and anchor rods shall be as directed by Engineer. Epoxy coating must be removed from bars prior to exothermic welding. Repair coating after welding in accordance with Artical 508.05 of the Standard Specs.

SHEET SD10A OF SD11

REVISIONS	
NAME	DATE
ADDENDUM 2	8/04/06

2

ILLINOIS DEPARTMENT OF TRANSPORTATION

F.A.I. 94/90 (DAN RYAN EXPRESSWAY)

GARFIELD BLVD TO 31ST STREET (NB LOCAL LANES)

KNEE WALL AT RAMP 43D
LIGHT TOWER DETAILS

SCALE: NTS — DRAWN BY: MTR

DATE: JUNE 9, 2006 — CHECKED BY: BLU

BOWMAN, BARRETT & ASSOCIATES INC.
CONSULTING ENGINEERS
Chicago, Illinois
312.228.0100
www.bbandainc.com

N:\96Dcad\cwl\NB\PET AINING WALLS\SEQ_BSKSW43D-01.dgn

8/4/2006 12:49:14 PM

2

F.A.I.	SECTION	COUNTY	TOTAL SHEETS	SHEET NO.
94/90	•	COOK	565	425
STA.	TO STA.			
FED. ROAD DIST. NO.	ILLINOIS	FED. AID PROJECT		

62301 •(2021-922 PT2 ETC 2324.6-1P) R-10

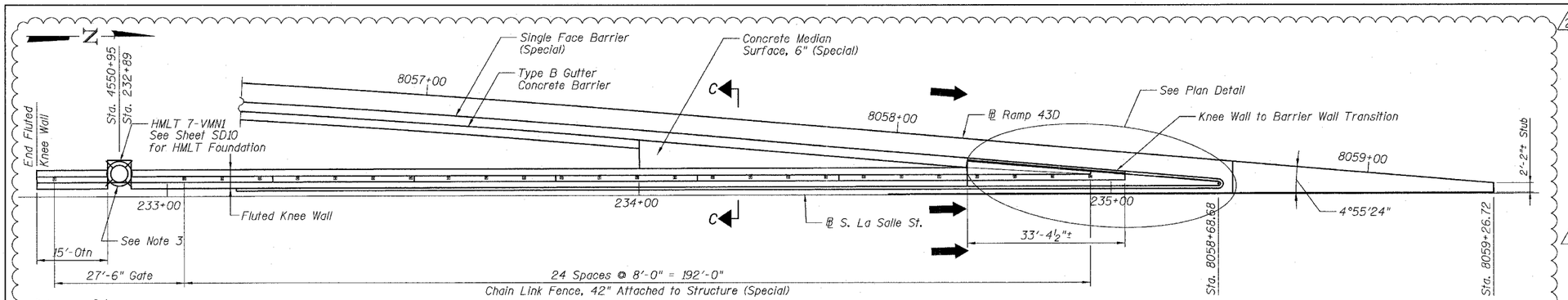

LOCATION PLAN

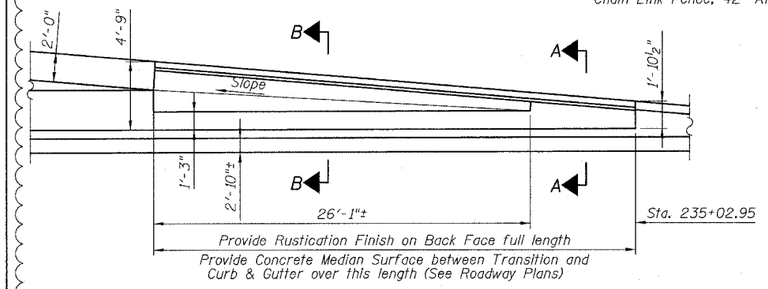

PLAN DETAIL

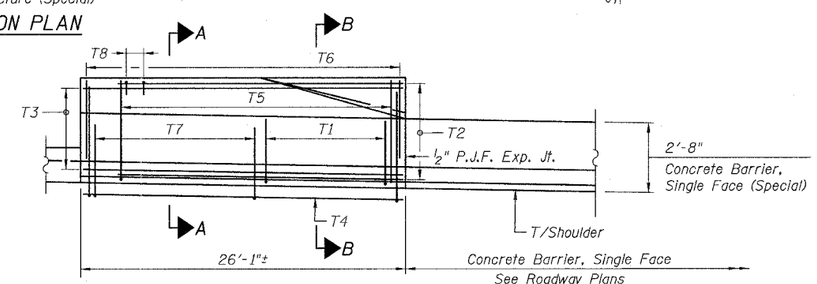

TRANSITION ELEVATION

(LOOKING FROM RAMP)

BILL OF MATERIAL

Bar	No.	Size	Length	Shape
d71(E)	27	#5	3'-3"	
d72(E)	34	#5	3'-11"	
d73(E)	34	#6	7'-6"	
d74(E)	34	#6	2'-11"	
d75(E)	8	#5	3'-1"	
d76(E)	8	#5	2'-4"	
h71(E)	14	#4	33'-0"	

Concrete Superstructure	Cu. Yd.	10.8
Reinforcement Bars, Epoxy Coated	Pound	1,120
Protective Coat	Sq. Yd.	34
Rustication Finish	Sq. Ft.	70
Fluted Knee Wall	Foot	193
Chain Link Fence, 42" Attached to Structure (Special)	Foot	192
Chain Link Gate Assembly (Special)	Each	1

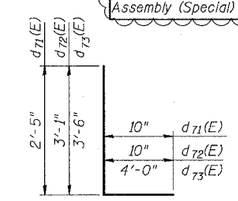

BARS d71(E), d72(E) and d73(E)

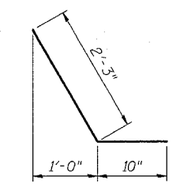

BAR d75(E)

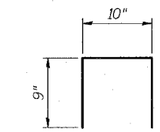

BAR d76(E)

TRANSITION REINF. SCHEDULE

T1: 27-#5 d71(E) bars @ 12" cts. F.F.
T2: 5-#4 h71(E) bars @ 12" cts. F.F.
T3: 5-#4 h71(E) bars @ 12" cts. B.F.
T4: 4-#4 h71(E) bars @ 12" cts. (Bottom of PCC Shoulder & Barrier Base)
T5: 34-#5 d72(E) bars @ 12" cts. F.F.
T6: 34-#6 d73(E) & d74(E) bars @ 12" cts. B.F.
T7: 8-#5 d75(E) bars @ 12" cts. F.F.
T8: 2-#5 d76(E) bars @ 12" (@ Fence Post Anchor Bolts, rotate to fit if necessary)

'A' varies 1'-3" to 1'-10½"
'B' varies 1'-10½" to 2'-6"
'C' varies 8"± to 9"±
'D' varies 0" to 1'-6"
'E' varies 7½" to 1'-4½"
'F' varies 2'-6" to 4'-9"
'G' varies 9"± to 1'-3"±

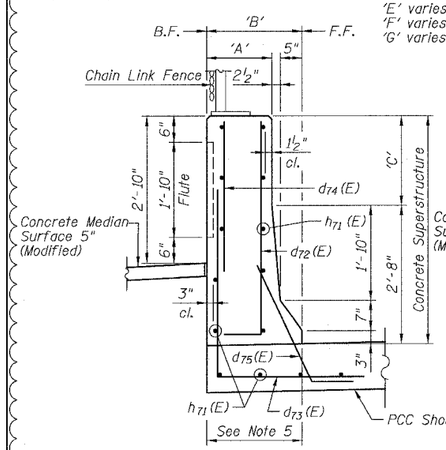

SECTION A-A

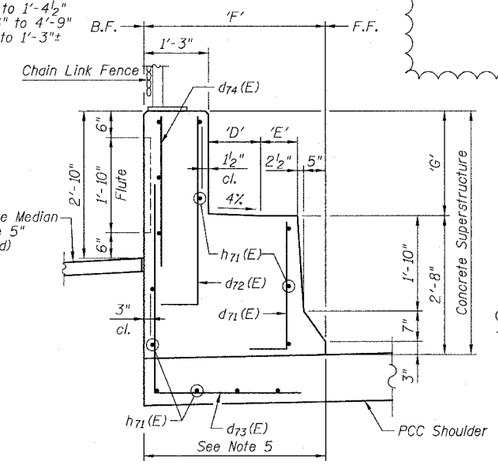

SECTION B-B

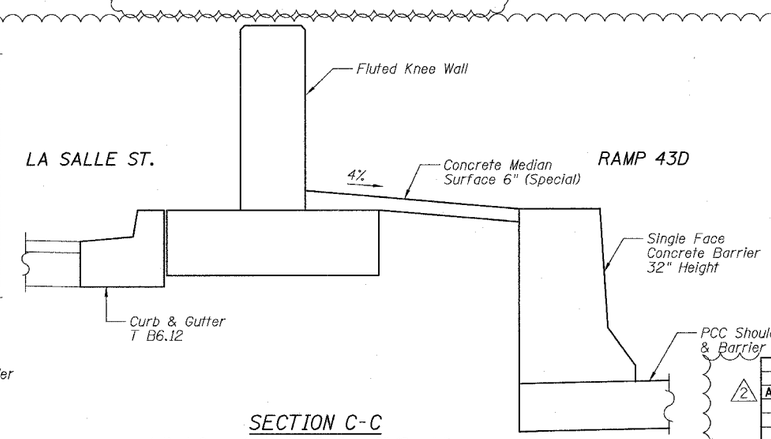

SECTION C-C

Adjust Concrete Median Surface 6" (Special) grades as required to meet field conditions and to ensure proper drainage. Separate concrete surfaces, as required with bond breaker as directed by the Engineer.

NOTES

1. F.F. and B.F. denote Front Face and Back Face of transition, respectively.
2. See Roadway Plans for details of items not shown here.
3. Provide Concrete Median Surface 5" (Modified) between Fluted Knee Wall, curb and gutter and HMLT Foundation
4. Knee Wall/Barrier Transition shall be paid as "Concrete Superstructure", "Reinforcement Bars, Epoxy Coated", "Rustication Finish" and "Protective Coat".
5. Portion of Ramp Shoulder under transition shall be paid for as Barrier Base. All reinforcement required for transition will be paid for as Reinforcement Bars, Epoxy Coated.

SHEET SD11 OF SD11

REVISIONS	
NAME	DATE
ADDENDUM 2	8/04/06

ILLINOIS DEPARTMENT OF TRANSPORTATION

F.A.I. 94/90 (DAN RYAN EXPRESSWAY)
GARFIELD BLVD TO 31ST STREET (NB LOCAL LANES)

KNEE WALL/BARRIER TRANSITION AT RAMP 43D

SCALE: NTS — DRAWN BY: KMW
DATE: JUNE 9, 2006 — CHECKED BY: BLU

BOWMAN, BARRETT & ASSOCIATES INC.
CONSULTING ENGINEERS
Chicago, Illinois
312.228.0100
www.bbandainc.com

N:\660\cad\Civil\SD\RETAINING WALLS\660_LBSKW130_01.dgn
12:47:31 PM
8/4/2006

F.A.I. RTE.	SECTION	COUNTY	TOTAL SHEETS	SHEET NO.
94/90	*	COOK	565	479

FED. ROAD DIST. NO. 1 | ILLINOIS | FED. AID PROJECT

62301 *(2021-922 PT2, ETC, 2324.6-1P)R-10

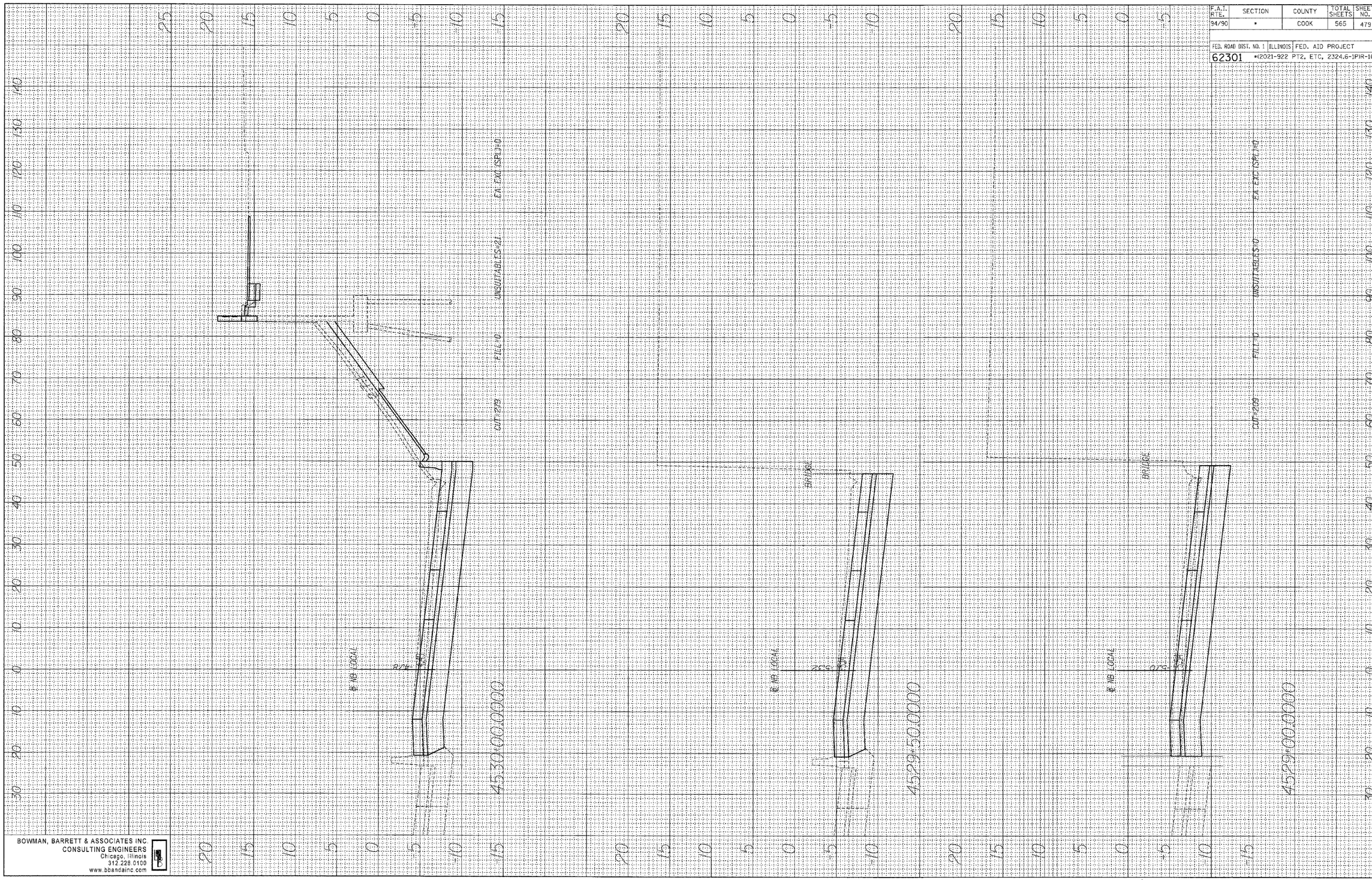

FINAL SURVEY	BY	DATE
SURVEYED		
PLOTTED		
TEMPLATE		
AREAS		
AREAS CHECKED		
NOTE BOOK NO.		

ORIGINAL SURVEY	BY	DATE
SURVEYED		
PLOTTED		
TEMPLATE		
AREAS		
AREAS CHECKED		
NOTE BOOK NO.		

BOWMAN, BARRETT & ASSOCIATES INC.
CONSULTING ENGINEERS
Chicago, Illinois
312.228.0100
www.bbandainc.com

N:\660\cadd\civil\B\SHEETS\660_IBC7501.dgn

8/4/2006 5:59:05 PM

ADDENDUM 2 8/04/06

F.A.I. RTE.	SECTION	COUNTY	TOTAL SHEETS	SHEET NO.
94/90	*	COOK	565	480

FED. ROAD DIST. NO. 1 | ILLINOIS | FED. AID PROJECT

62301 *(2021-922 PT2, ETC, 2324.6-1P)R-10

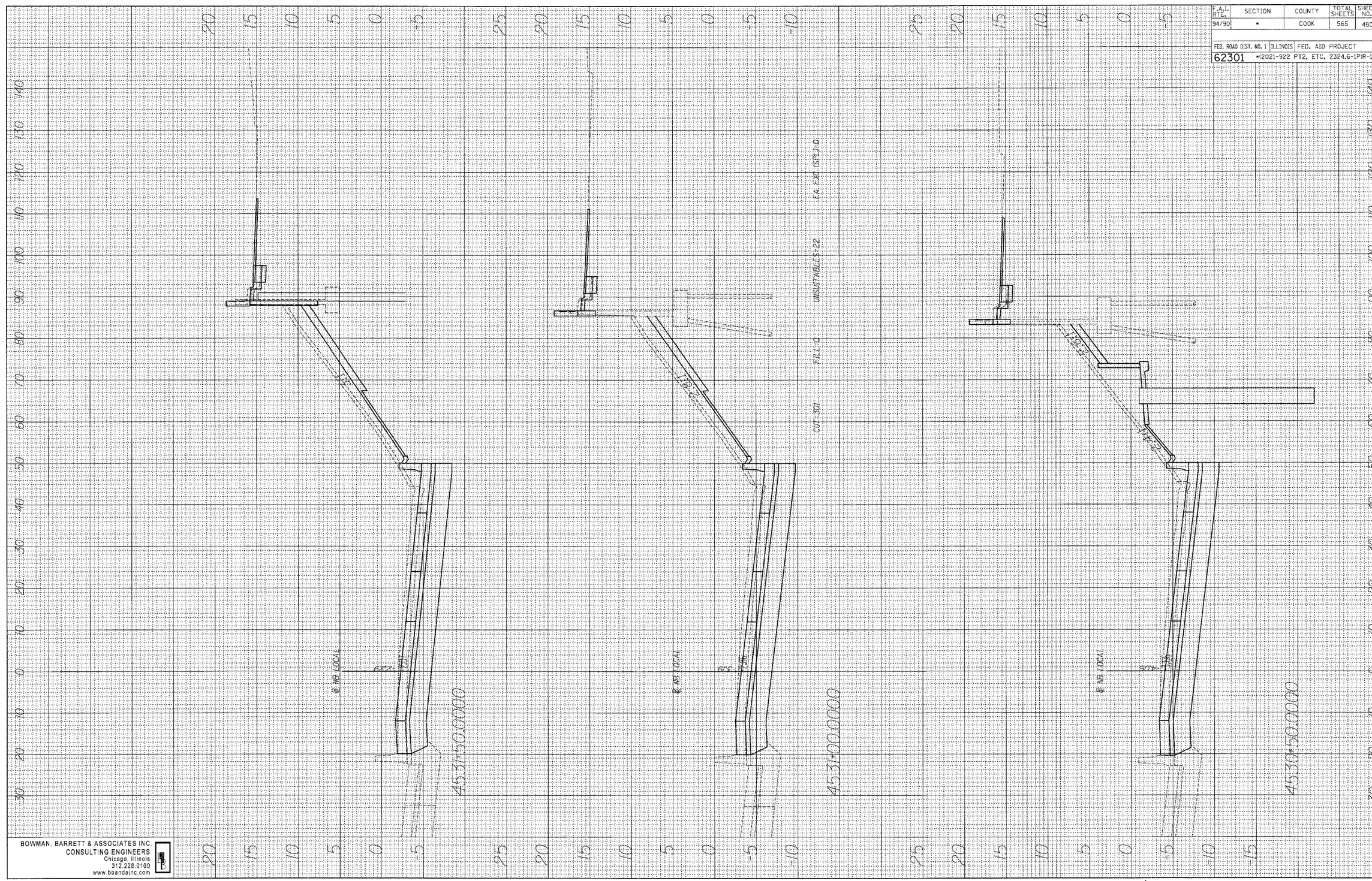

FINAL SURVEY	BY	DATE
SURVEYED		
PLOTTED		
TEMPLATE		
AREAS		
AREAS CHECKED		
NOTE BOOK		
NO.		

ORIGINAL SURVEY	BY	DATE
SURVEYED		
PLOTTED		
TEMPLATE		
AREAS		
AREAS CHECKED		
NOTE BOOK		
NO.		

BOWMAN, BARRETT & ASSOCIATES INC.
CONSULTING ENGINEERS
Chicago, Illinois
312.228.0100
www.bbandainc.com

2 ADDENDUM 2 8/04/06 2

N:\660\cadd\GNTNB\SHEET S\660_JBCXS01.dgn

8/4/2006 5:59:11 PM

F.A.I. RTE.	SECTION	COUNTY	TOTAL SHEETS	SHEET NO.
94/90	*	COOK	565	481

FED. ROAD DIST. NO. 1 | ILLINOIS | FED. AID PROJECT

62301 *(2021-922 PT2, ETC. 2324.6-1P)R-10

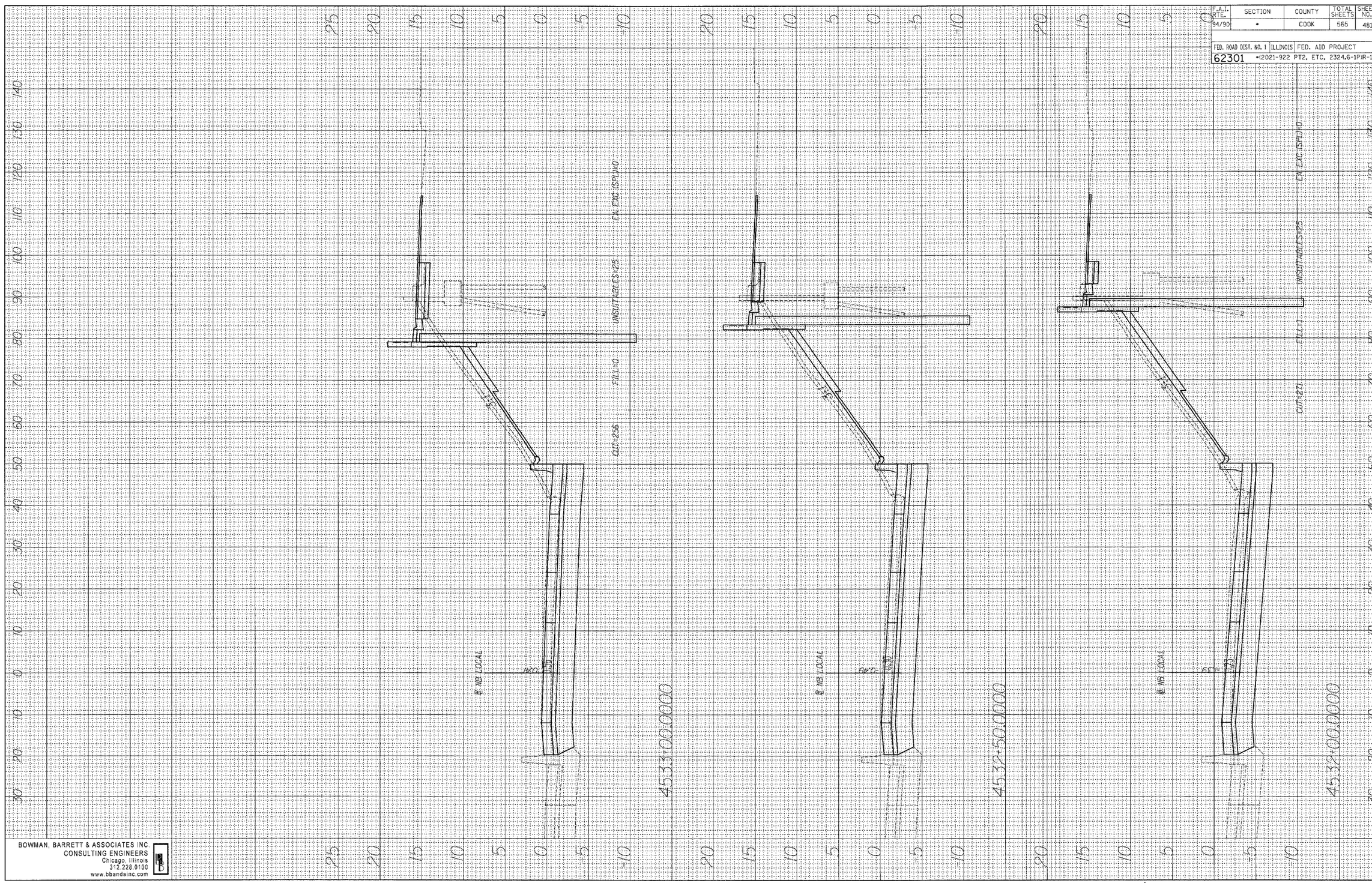

FINAL SURVEY	BY	DATE
SURVEYED		
PLOTTED		
TEMPLATE		
AREAS		
AREAS CHECKED		
NOTE BOOK NO.		

ORIGINAL SURVEY	BY	DATE
SURVEYED		
PLOTTED		
TEMPLATE		
AREAS		
AREAS CHECKED		
NOTE BOOK NO.		

BOWMAN, BARRETT & ASSOCIATES INC.
CONSULTING ENGINEERS
Chicago, Illinois
312.228.0100
www.bbandainc.com

2 ADDENDUM 2 8/04/06 2

ORIGINAL SURVEY		BY	DATE
NOTE BOOK	SURVEYED		
	PLOTTED		
	TEMPLATE		
	AREAS		
NO.	AREAS CHECKED		

FINAL SURVEY		BY	DATE
NOTE BOOK	SURVEYED		
	PLOTTED		
	TEMPLATE		
	AREAS		
NO.	AREAS CHECKED		

BOWMAN, BARRETT & ASSOCIATES INC.
CONSULTING ENGINEERS
Chicago, Illinois
312.226.0100
www.bbandinc.com

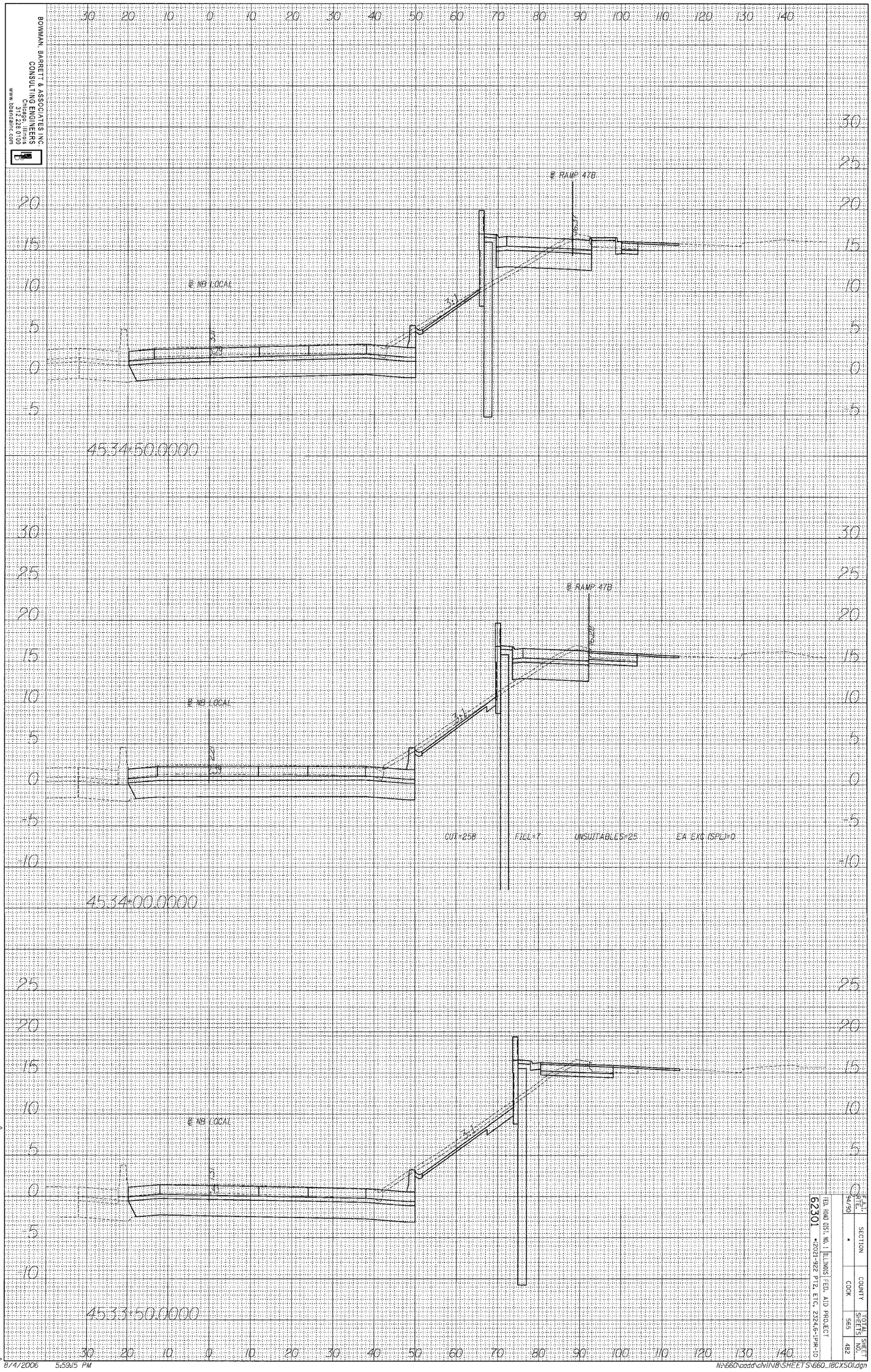

ADDENDUM 2 8/04/06

FED. ROAD DIST. NO. 1	ILLINOIS	FED. AID PROJECT
62301	•(2021-922 PT2, ETC. 232.4.6-1-IR-10	

F.A.I. RTE.	SECTION	COUNTY	TOTAL SHEETS	SHEET NO.
94/90	•	COOK	565	482

8/4/2006 5:59:15 PM N:\660\pdd\civil\B\SHEETS\660_IBCXSO1.dgn

ORIGINAL SURVEY		BY	DATE
NOTE BOOK	SURVEYED		
	PLOTTED		
	TEMPLATE		
	AREAS		
NO.	AREAS CHECKED		

FINAL SURVEY		BY	DATE
NOTE BOOK	SURVEYED		
	PLOTTED		
	TEMPLATE		
	AREAS		
NO.	AREAS CHECKED		

BOWMAN BARRETT & ASSOCIATES INC
CONSULTING ENGINEERS
Chicago, Illinois
(312) 231-0109
www.bowmanbarrett.com

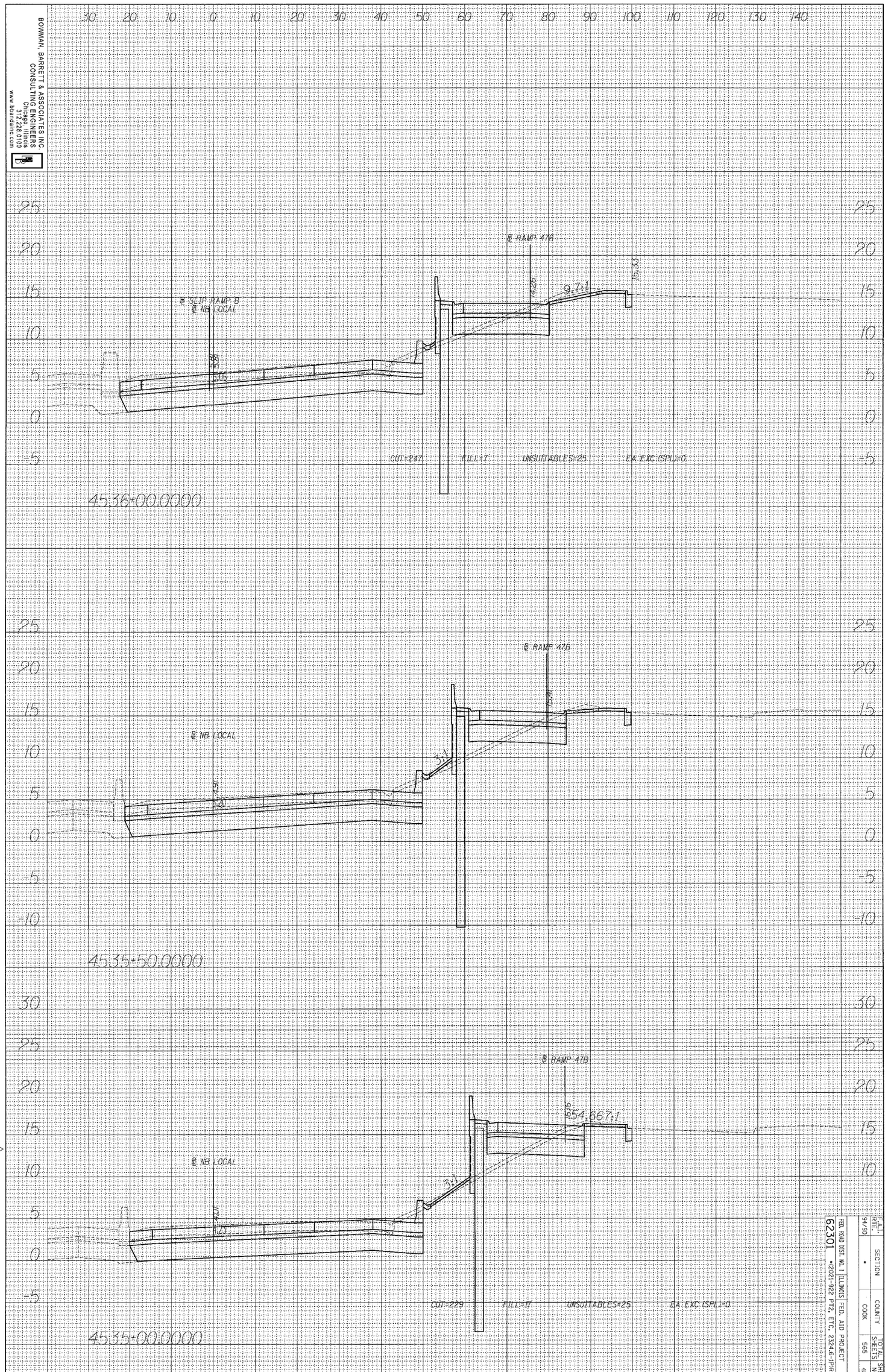

ADDENDUM 2 8/04/06

F.A.I. RTE.	SECTION	COUNTY	TOTAL SHEETS	SHEET NO.
94/90	*	COOK	565	483

FED. ROAD DIST. NO. 1 | ILLINOIS | FED. AID PROJECT

62301 *(2021-922 P12, ETC. 2324.6-IPR-10)

8/4/2006 5:59:17 PM

N:\660\cadd\CIVIL\B\SHEETS\660_18CXS01.dgn

ORIGINAL SURVEY		BY	DATE
NOTE BOOK	SURVEYED		
	PLOTTED		
	TEMPLATE		
	AREAS		
NO.	AREAS CHECKED		

FINAL SURVEY		BY	DATE
NOTE BOOK	SURVEYED		
	PLOTTED		
	TEMPLATE		
	AREAS		
NO.	AREAS CHECKED		

BOWMAN, BARRETT & ASSOCIATES INC
CONSULTING ENGINEERS
Chicago, Illinois
312.228.0100
www.bbaillinois.com

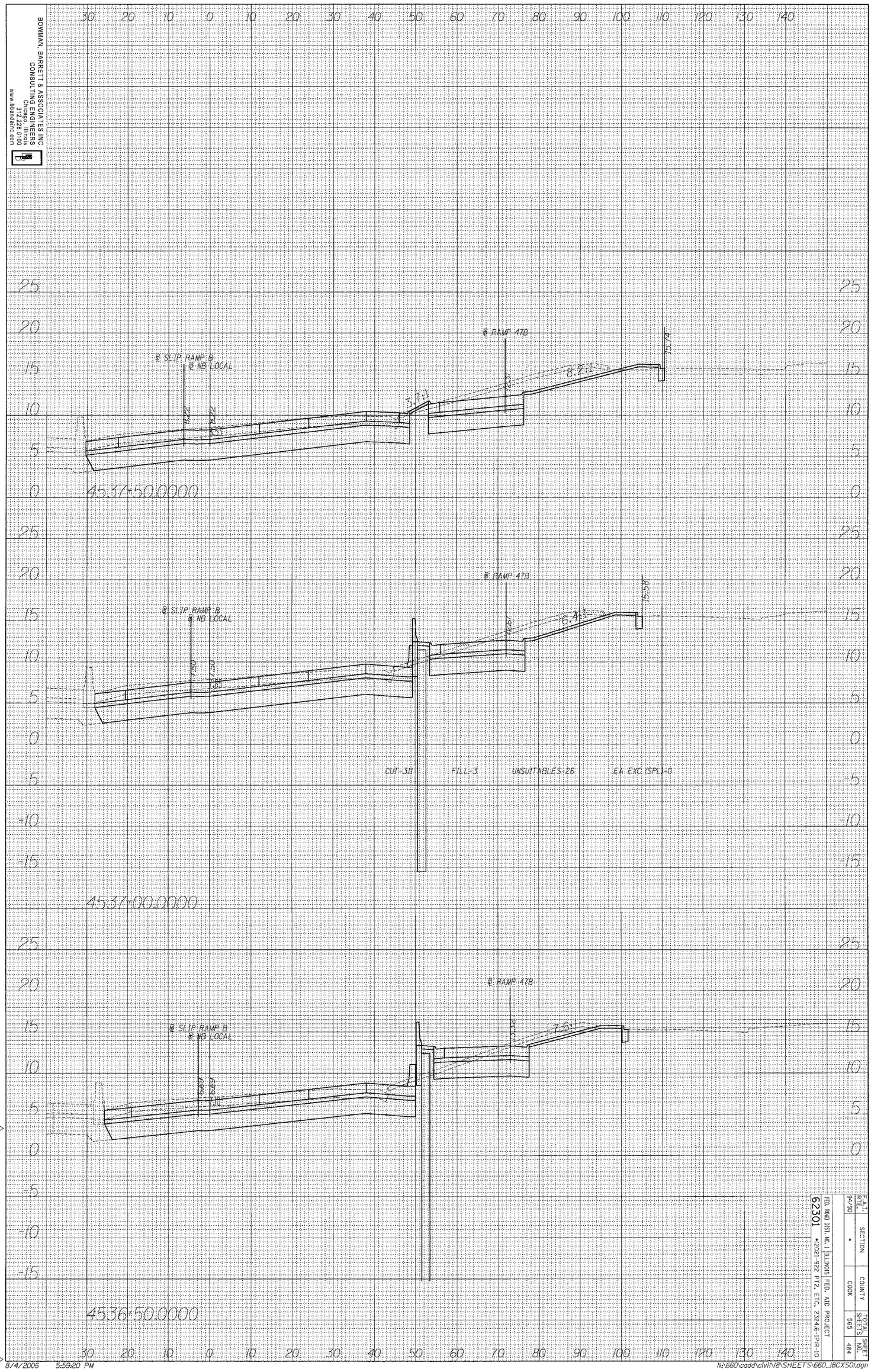

ADDENDUM 2 8/04/06

F.A.I. 94/95	SECTION	COUNTY	TOTAL SHEETS	SHEET NO.
	*	COOK	565	484

FED. ROAD DIST. NO. 1 | ILLINOIS | FED. AID PROJECT

62301 *(2021-372 P1), ETC. 23246-1PR-10

8/4/2006 5:59:20 PM

N:\660\cadd\civil\B\SHEETS\660_IBCXS01.dgn

F.A.I. RTE.	SECTION	COUNTY	TOTAL SHEETS	SHEET NO.
94/90	*	COOK	565	485

FED. ROAD DIST. NO. 1 | ILLINOIS | FED. AID PROJECT

62301 *(2021-922 PT2, ETC. 2324.6-1P)R-10

N:\660\cadd\CNN\BSHEETS\660_18CXSOI.dgn

FINAL SURVEY	BY	DATE
SURVEYED		
PLOTTED		
TEMPLATE		
AREAS		
AREAS CHECKED		
NOTE BOOK NO.		

ORIGINAL SURVEY	BY	DATE
SURVEYED		
PLOTTED		
TEMPLATE		
AREAS		
AREAS CHECKED		
NOTE BOOK NO.		

BOWMAN, BARRETT & ASSOCIATES INC.
CONSULTING ENGINEERS
Chicago, Illinois
312.228.0100
www.bbandainc.com

ADDENDUM 2 8/04/06

8/4/2006 5:59:22 PM

F.A.I. RTE.	SECTION	COUNTY	TOTAL SHEETS	SHEET NO.
94/90	*	COOK	565	486

FED. ROAD DIST. NO. 1	ILLINOIS	FED. AID PROJECT
62301	*(2021-922 PT2, ETC. 2324.6-1P)R-10	

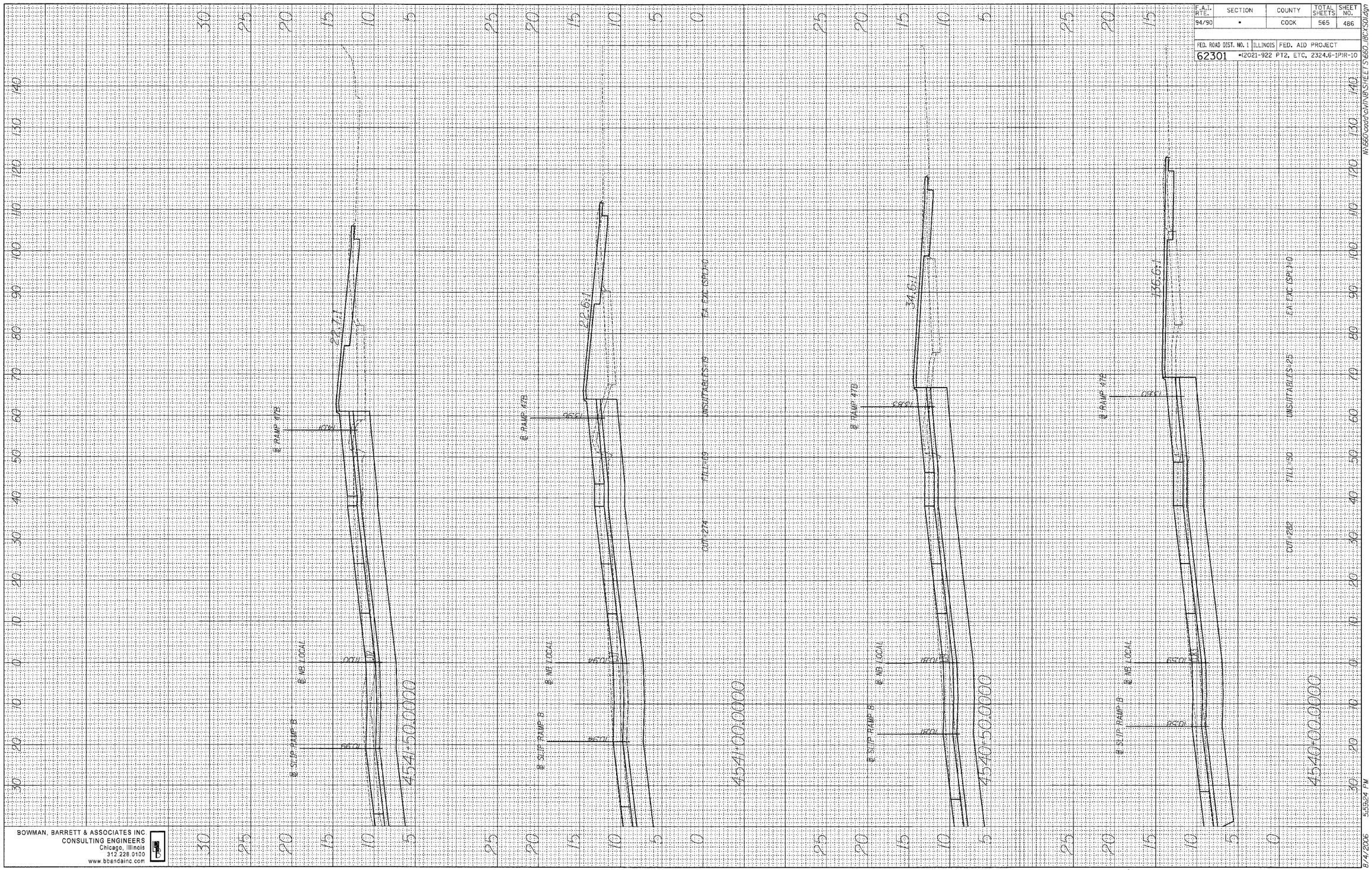

ORIGINAL SURVEY		BY	DATE
NOTE BOOK	SURVEYED		
	PLOTTED		
	TEMPLATE		
	AREAS		
NO.	AREAS CHECKED		

FINAL SURVEY		BY	DATE
NOTE BOOK	SURVEYED		
	PLOTTED		
	TEMPLATE		
	AREAS		
NO.	AREAS CHECKED		

BOWMAN, BARRETT & ASSOCIATES INC
CONSULTING ENGINEERS
Chicago, Illinois
312.228.0100
www.bbandainc.com

N:\660cadd\civil\B\SHEETS\660_BCXS01.dgn

8/4/2006 5:59:24 PM

2 ADDENDUM 2 8/04/06 2

F.A.I. RTE.	SECTION	COUNTY	TOTAL SHEETS	SHEET NO.
94/90	*	COOK	565	487

FED. ROAD DIST. NO. 1 | ILLINOIS | FED. AID PROJECT

62301 *(2021-922 PT2, ETC. 2324.6-1P)R-10

N:\660\cadd\CIVIL\SHEETS\660_18CKSD.dgn

ORIGINAL SURVEY		BY	DATE
NOTE BOOK	SURVEYED		
	PLOTTED		
	TEMPLATE		
	AREAS		
NO.	AREAS CHECKED		

FINAL SURVEY		BY	DATE
NOTE BOOK	SURVEYED		
	PLOTTED		
	TEMPLATE		
	AREAS		
NO.	AREAS CHECKED		

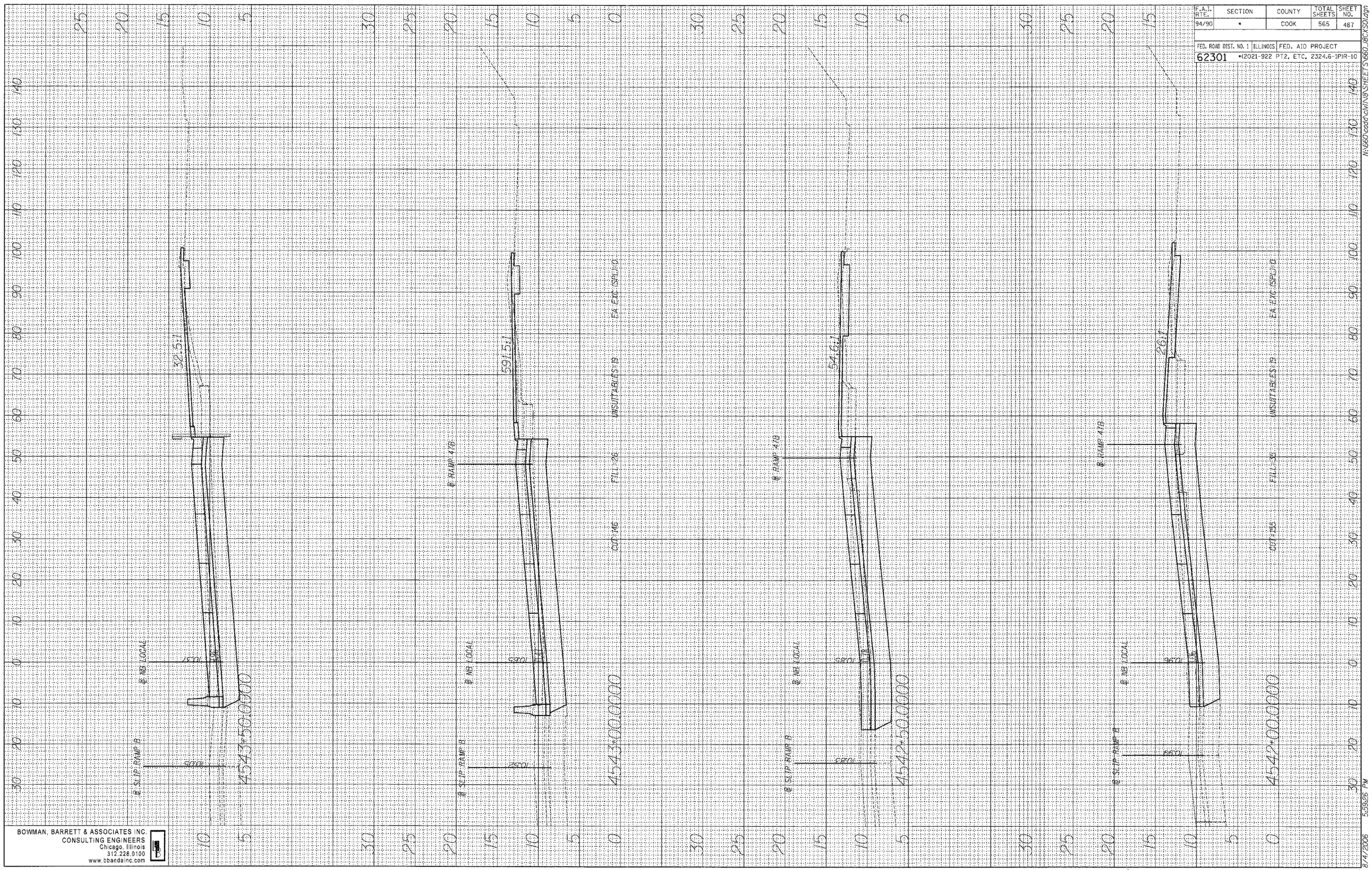

BOWMAN, BARRETT & ASSOCIATES INC.
CONSULTING ENGINEERS
Chicago, Illinois
312.228.0100
www.bbandainc.com

8/4/2006 5:59:26 PM

2 ADDENDUM 2 8/04/06 2

F.A.I. RTE.	SECTION	COUNTY	TOTAL SHEETS	SHEET NO.
94/90	*	COOK	565	488

FED. ROAD DIST. NO. 1 | ILLINOIS | FED. AID PROJECT

62301 *(2021-922 PT2, ETC, 2324.6-1P)R-10

FINAL SURVEY	BY	DATE
NOTE BOOK NO.	SURVEYED	
	PLOTTED	
	TEMPLATE	
	AREAS	
	AREAS CHECKED	

ORIGINAL SURVEY	BY	DATE
NOTE BOOK NO.	SURVEYED	
	PLOTTED	
	TEMPLATE	
	AREAS	
	AREAS CHECKED	

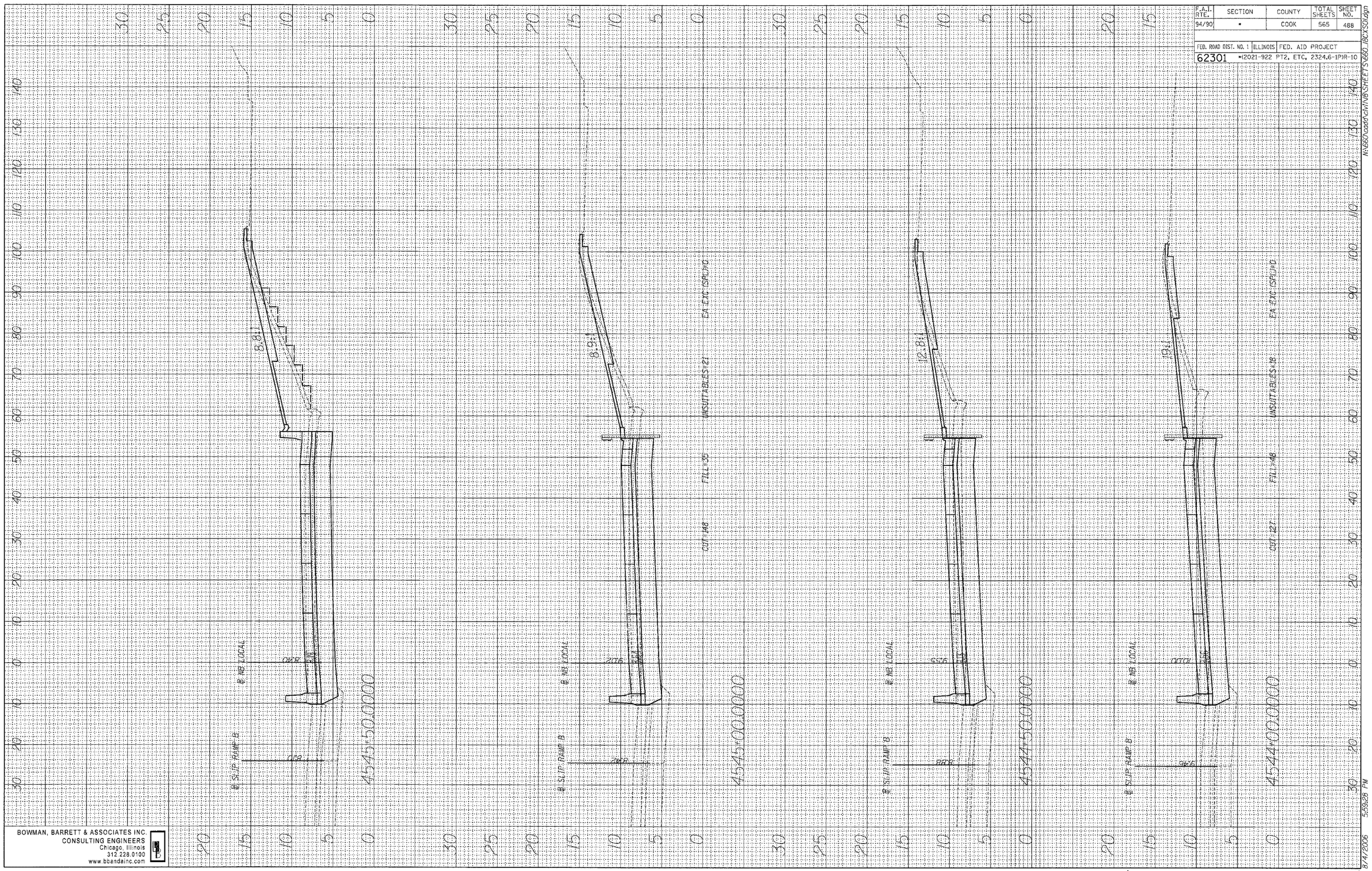

BOWMAN, BARRETT & ASSOCIATES INC.
CONSULTING ENGINEERS
Chicago, Illinois
312.228.0100
www.bbandainc.com

ADDENDUM 2 8/04/06

N:\660\cadd\civil\SHEETS\660_JACKSOI.dgn 8/4/2006 5:59:26 PM

ORIGINAL SURVEY		BY	DATE
NOTE BOOK	SURVEYED		
	PLOTTED		
	TEMPLATE		
	AREAS		
NO.	AREAS CHECKED		

FINAL SURVEY		BY	DATE
NOTE BOOK	SURVEYED		
	PLOTTED		
	TEMPLATE		
	AREAS		
NO.	AREAS CHECKED		

BOWMAN BARRETT & ASSOCIATES INC
CONSULTING ENGINEERS
Chicago Illinois
(312) 782-0100
www.bbaeinc.com

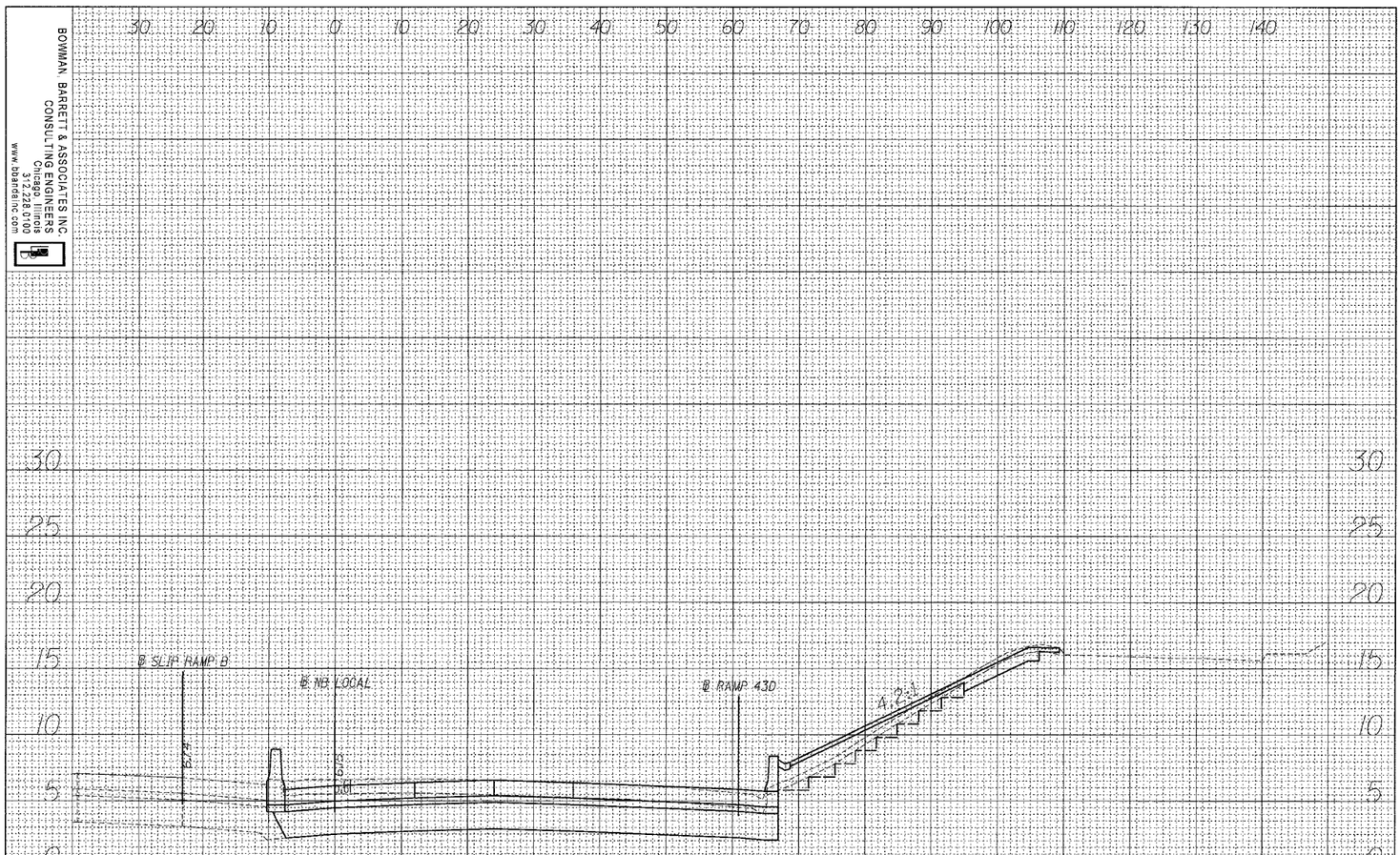

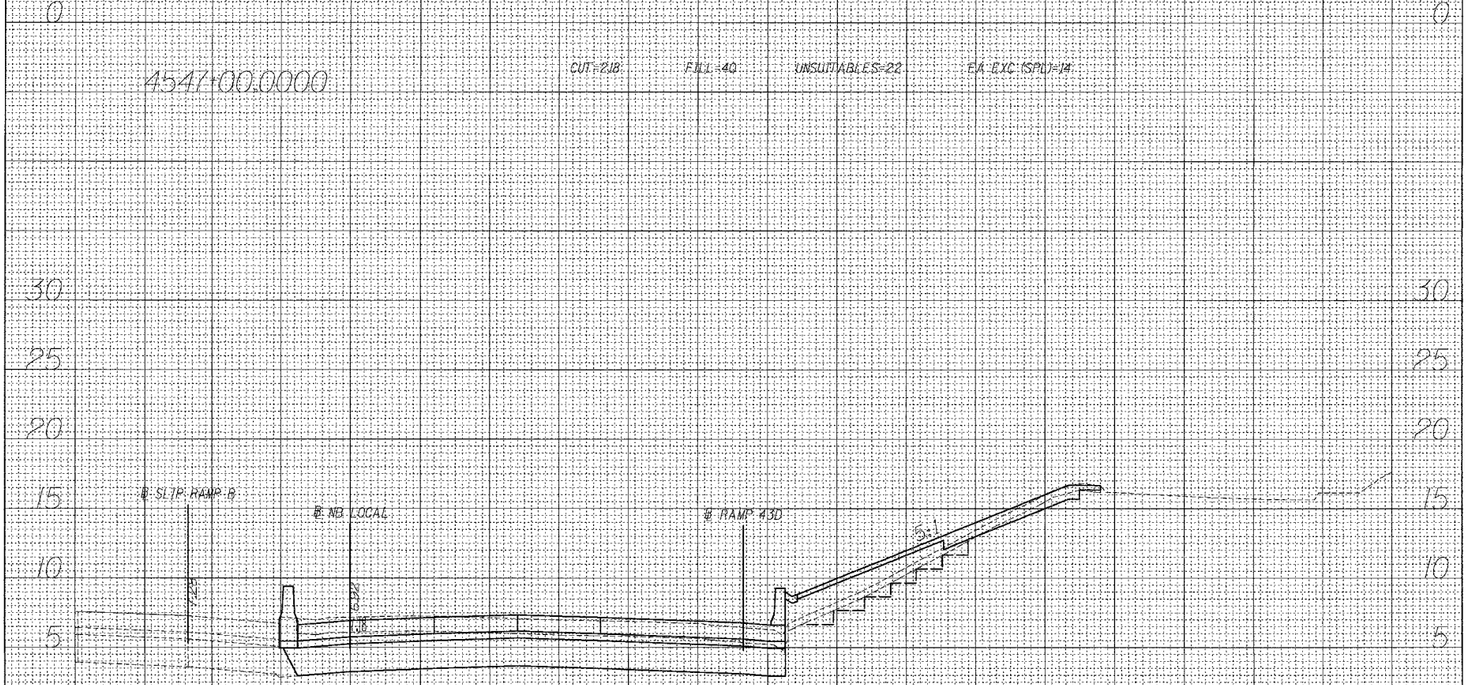

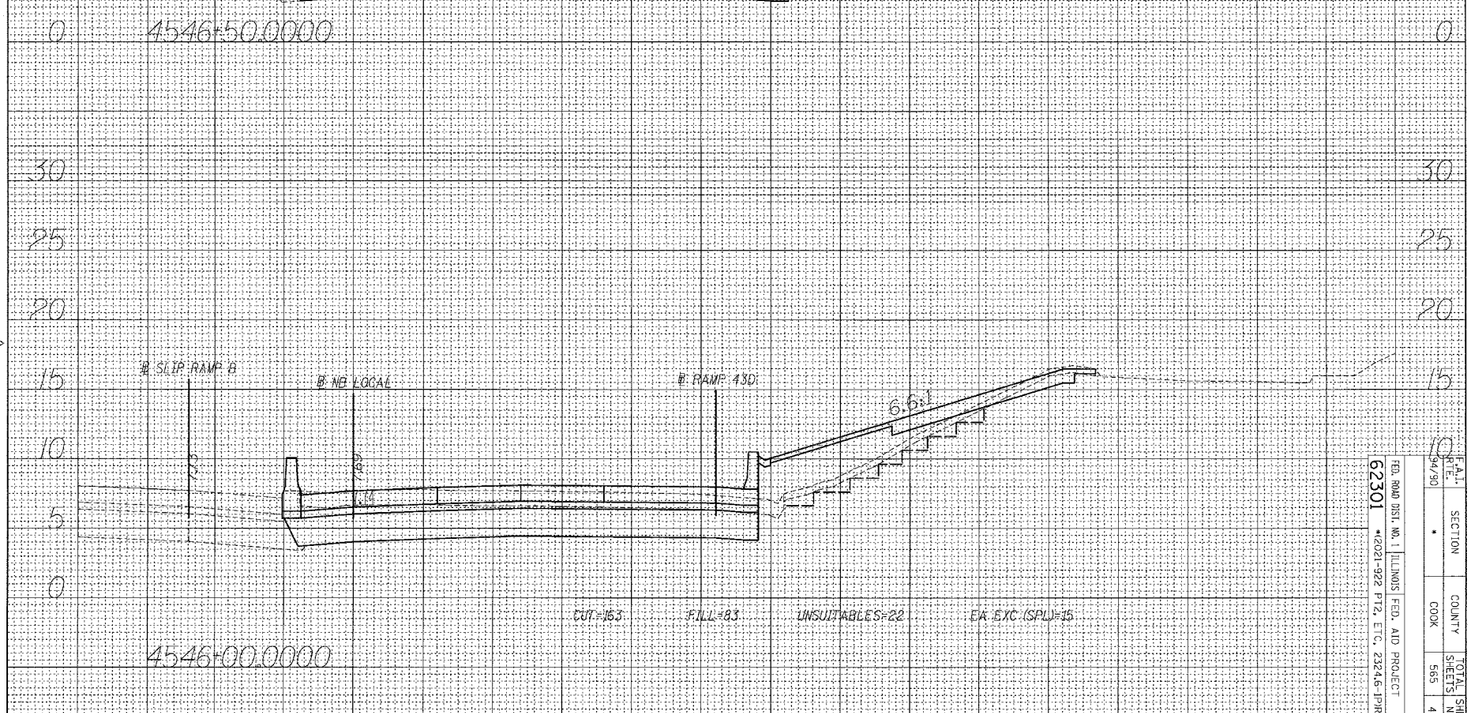

F.A.I. RTE.	SECTION	COUNTY	TOTAL SHEETS	SHEET NO.
94/90	*	COOK	565	489

FED. ROAD DIST. NO. 1 ILLINOIS FEDL. AID PROJECT

62301 *(2021-322 PTB, ETC. 2324.6-IPR-10)

ADDENDUM 2 8/04/06

8/4/2006 5:59:31 PM

N:\660\cadd\civil\B\SHEETS\660_I8CX501.dgn

F.A.I. RTE.	SECTION	COUNTY	TOTAL SHEETS	SHEET NO.
94/90	*	COOK	565	490

FED. ROAD DIST. NO. 1 | ILLINOIS | FED. AID PROJECT

62301 *(2021-922 PT2, ETC, 2324.6-1P)R-10

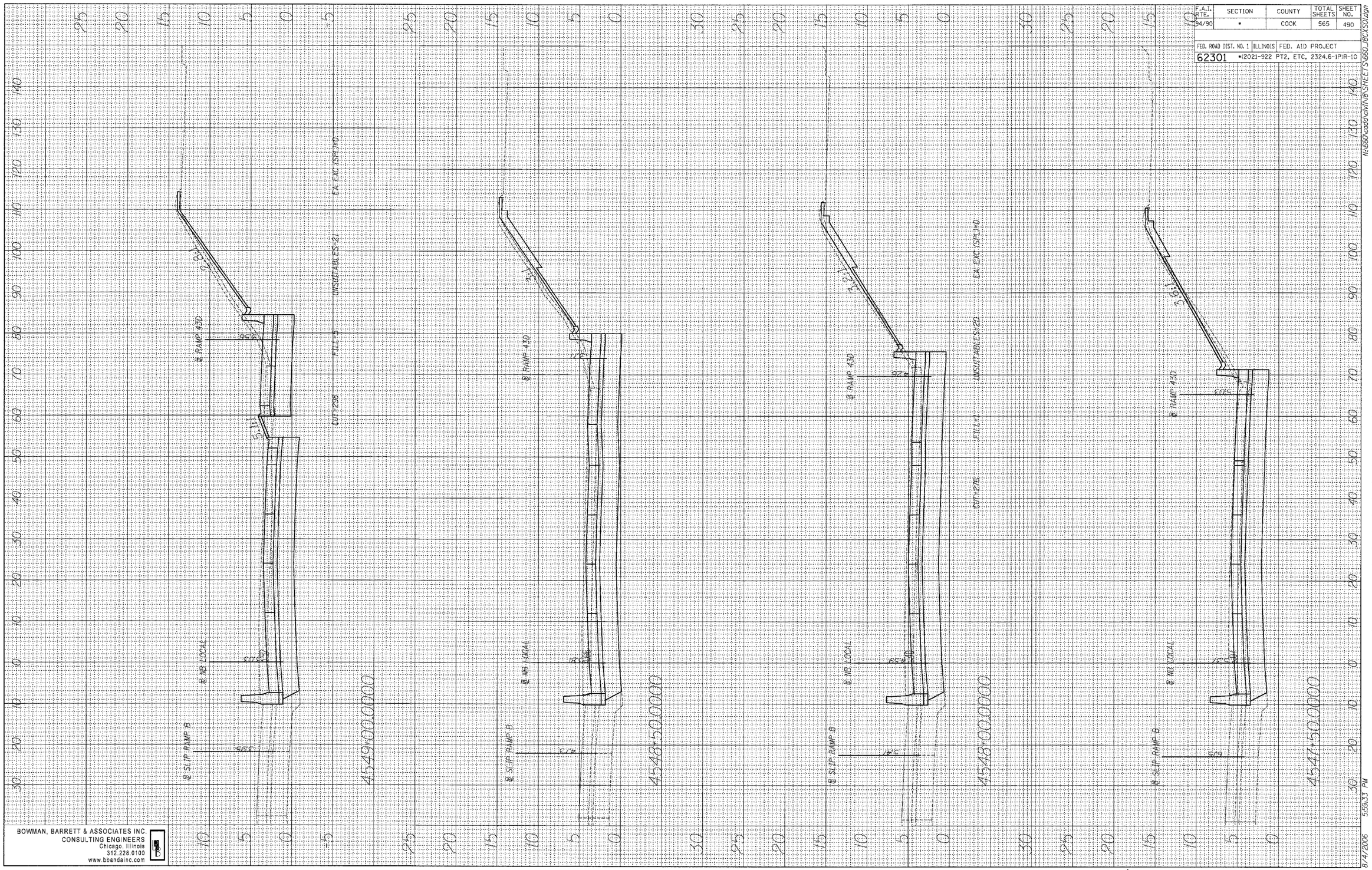

ORIGINAL SURVEY	BY	DATE
SURVEYED		
PLOTTED		
TEMPLATE		
AREAS		
AREAS CHECKED		
NOTE BOOK		
NO.		

FINAL SURVEY	BY	DATE
SURVEYED		
PLOTTED		
TEMPLATE		
AREAS		
AREAS CHECKED		
NOTE BOOK		
NO.		

BOWMAN, BARRETT & ASSOCIATES INC.
CONSULTING ENGINEERS
Chicago, Illinois
312.228.0100
www.bbandainc.com

ADDENDUM 2 8/04/06

N:\660\cadd\MNB\SHEETS\660_JBCXSO1.dgn 8/4/2006 5:59:33 PM

F.A.I. RTE.	SECTION	COUNTY	TOTAL SHEETS	SHEET NO.
94/90	*	COOK	565	491

FED. ROAD DIST. NO. 1	ILLINOIS	FED. AID PROJECT
62301	*(2021-922 PT2, ETC. 2324.6-1P)R-10	

FINAL SURVEY	BY	DATE
NOTE BOOK NO.	SURVEYED	
	PLOTTED	
	TEMPLATE	
	AREAS	
	AREAS CHECKED	

ORIGINAL SURVEY	BY	DATE
NOTE BOOK NO.	SURVEYED	
	PLOTTED	
	TEMPLATE	
	AREAS	
	AREAS CHECKED	

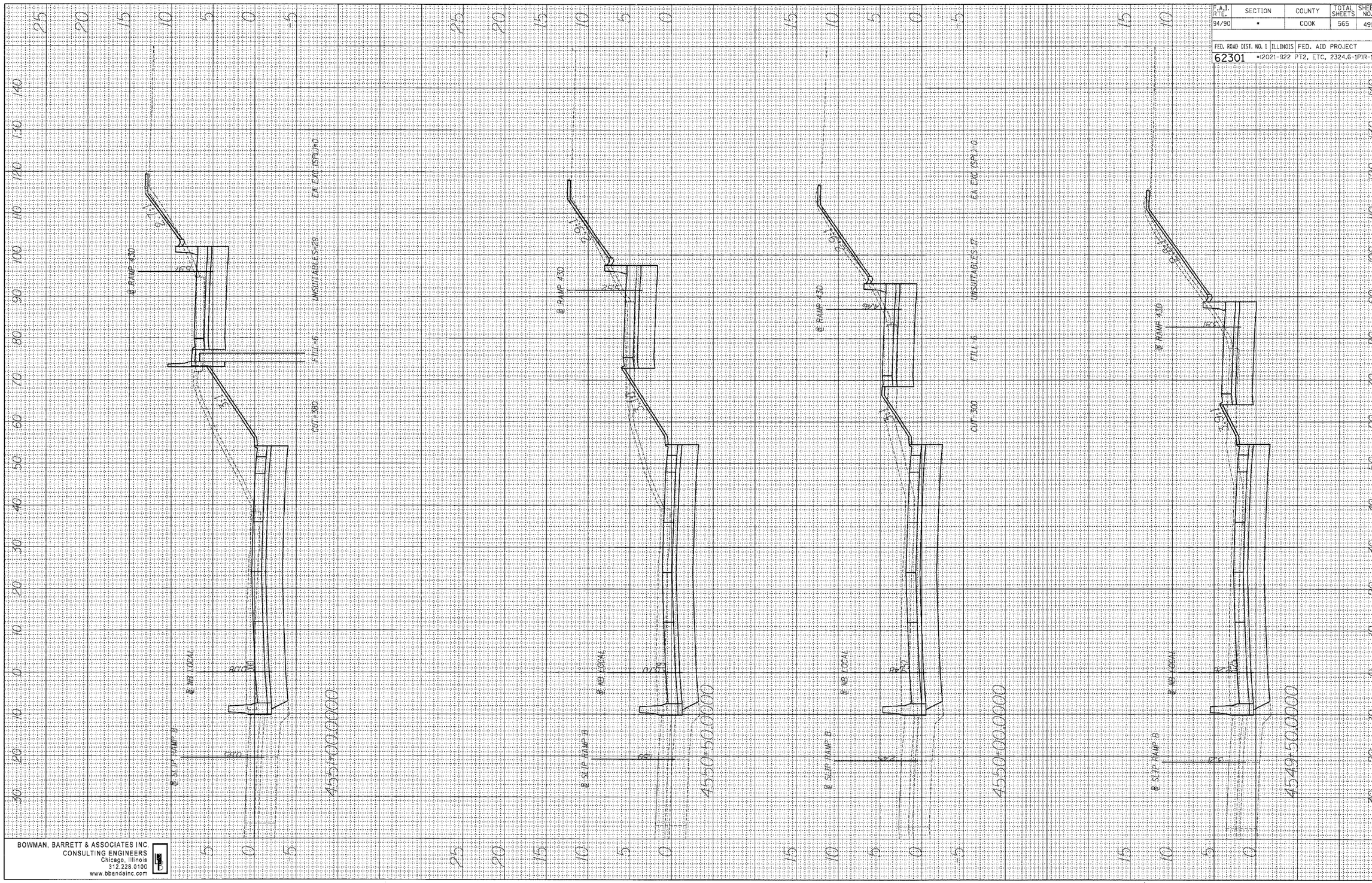

BOWMAN, BARRETT & ASSOCIATES INC
CONSULTING ENGINEERS
Chicago, Illinois
312.228.0100
www.bbandainc.com

2 ADDENDUM 2 8/04/06

F.A.I. RTE.	SECTION	COUNTY	TOTAL SHEETS	SHEET NO.
94/90	*	COOK	565	492

FED. ROAD DIST. NO. 1	ILLINOIS	FED. AID PROJECT
62301	*(2021-922 PT2, ETC, 2324.6-1P)R-10	

FINAL SURVEY	BY	DATE
SURVEYED		
PLOTTED		
TEMPLATE		
AREAS		
AREAS CHECKED		
NOTE BOOK NO.		

ORIGINAL SURVEY	BY	DATE
SURVEYED		
PLOTTED		
TEMPLATE		
AREAS		
AREAS CHECKED		
NOTE BOOK NO.		

BOWMAN, BARRETT & ASSOCIATES INC.
CONSULTING ENGINEERS
Chicago, Illinois
312.228.0100
www.bbandainc.com

ADDENDUM 2 8/04/06

N:\660\odot\CMN\SHEETS\660_DECKSOL.dgn
8/4/2006 5:59:37 PM

F.A.I. RTE.	SECTION	COUNTY	TOTAL SHEETS	SHEET NO.
94/90	*	COOK	565	493

FED. ROAD DIST. NO. 1 | ILLINOIS | FED. AID PROJECT

62301 *(2021-922 PT2, ETC. 2324.6-1P)R-10

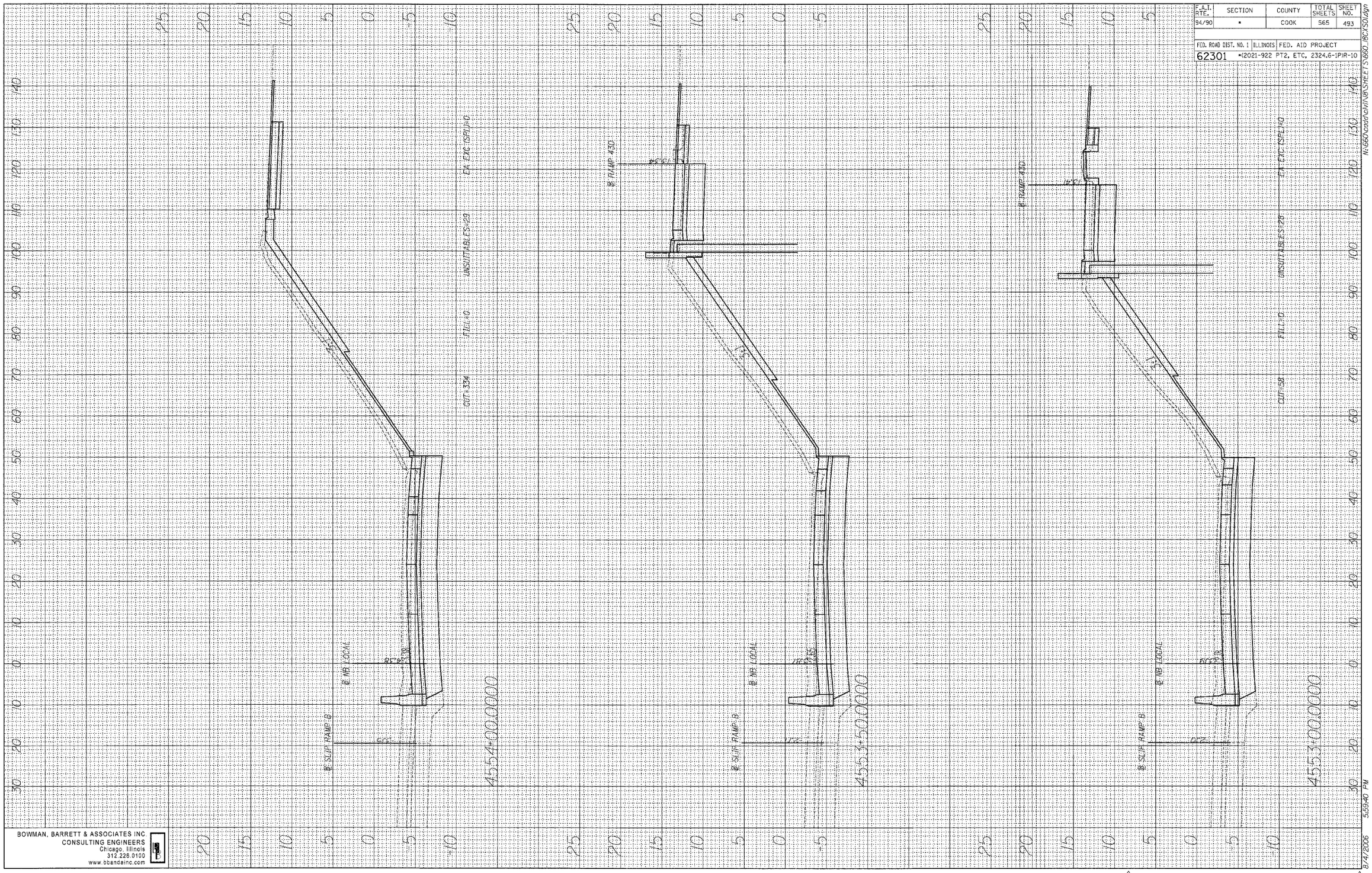

FINAL SURVEY	BY	DATE
SURVEYED		
PLOTTED		
TEMPLATE		
AREAS		
AREAS CHECKED		
NOTE BOOK NO.		

ORIGINAL SURVEY	BY	DATE
SURVEYED		
PLOTTED		
TEMPLATE		
AREAS		
AREAS CHECKED		
NOTE BOOK NO.		

BOWMAN, BARRETT & ASSOCIATES INC
CONSULTING ENGINEERS
Chicago, Illinois
312.226.0100
www.bbandainc.com

M:\660\cadd\chi\IB\SHEETS\660_IBCXS01.dgn

8/4/2006 5:59:40 PM

2 ADDENDUM 2 8/04/06 2

ORIGINAL SURVEY		BY	DATE
NOTE BOOK	SURVEYED		
	PLOTTED		
	TEMPLATE		
	AREAS		
NO.	AREAS CHECKED		

FINAL SURVEY		BY	DATE
NOTE BOOK	SURVEYED		
	PLOTTED		
	TEMPLATE		
	AREAS		
NO.	AREAS CHECKED		

BOWMAN, BARRETT & ASSOCIATES INC
CONSULTING ENGINEERS
Chicago, Illinois
Phone 312-201-0003
www.bbandassoc.com

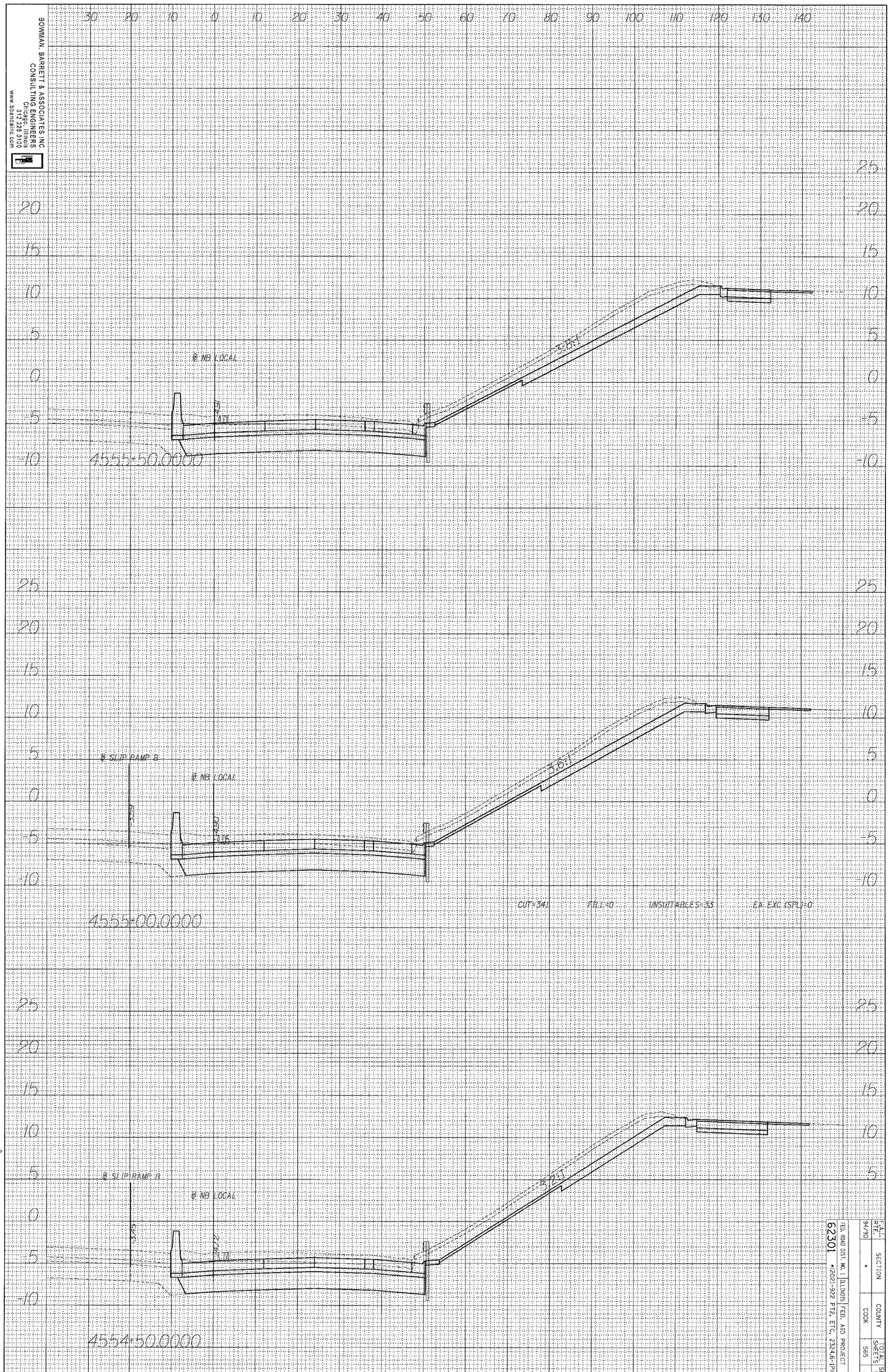

ADDENDUM 2 8/04/06

F.A.I. RTE.	SECTION	COUNTY	TOTAL SHEETS	SHEET NO.
94/90	*	COOK	565	494

FED. ROAD DIST. NO. 1 ILLINOIS FED. AID PROJECT

62301 *(2021-392 PTB, ETC. 2324.6-IPR-10)

8/4/2006 5:59:42 PM

N:\660\cadd\civil\NB\SHEETS\660_I80CX501.dgn

ORIGINAL SURVEY		BY	DATE
NOTE BOOK	SURVEYED		
	PLOTTED		
	TEMPLATE		
	AREAS		
NO.	AREAS CHECKED		

FINAL SURVEY		BY	DATE
NOTE BOOK	SURVEYED		
	PLOTTED		
	TEMPLATE		
	AREAS		
NO.	AREAS CHECKED		

BOWMAN, BARRETT & ASSOCIATES INC
CONSULTING ENGINEERS
Chicago, Illinois
312.232.0700
www.bowmanbarrettc.com

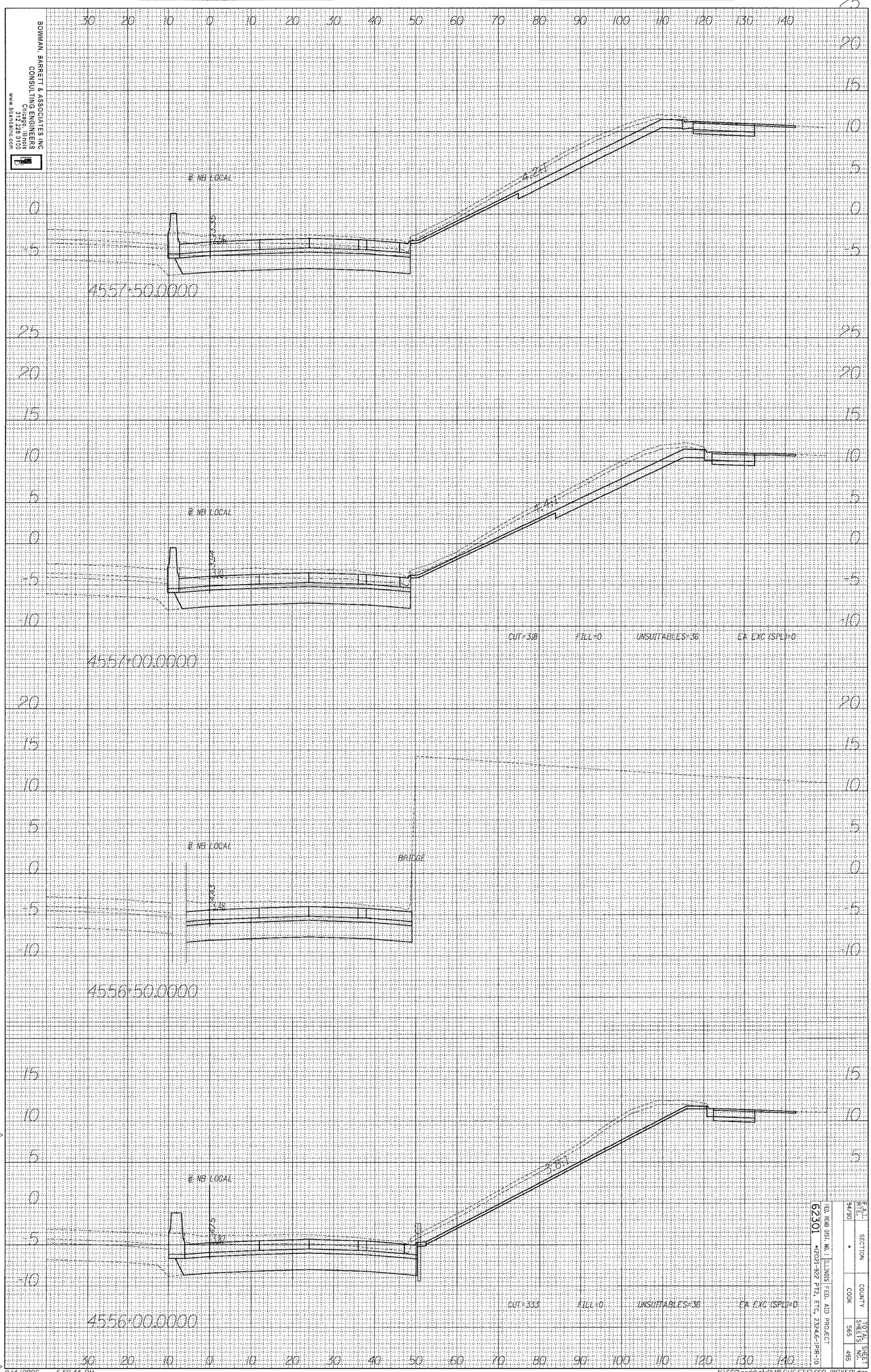

F.A.I. RTE.	SECTION	COUNTY	TOTAL SHEETS	SHEET NO.
94/90	*	COOK	565	495

FED. ROAD DIST. NO. 1 | ILLINOIS | FED. AID PROJECT

62301 •(2021-932 PTL, ETC. 2324-6-1PR-10

ADDENDUM 2 8/04/06

8/4/2006 5:59:44 PM

N:\660\cadd\CMNB\SHEETS\660_18CX501.dgn

F.A.I. RTE.	SECTION	COUNTY	TOTAL SHEETS	SHEET NO.
94/90	*	COOK	565	496

FED. ROAD DIST. NO. 1 | ILLINOIS | FED. AID PROJECT

62301 *(2021-922 PT2, ETC, 2324.6-IP)R-10

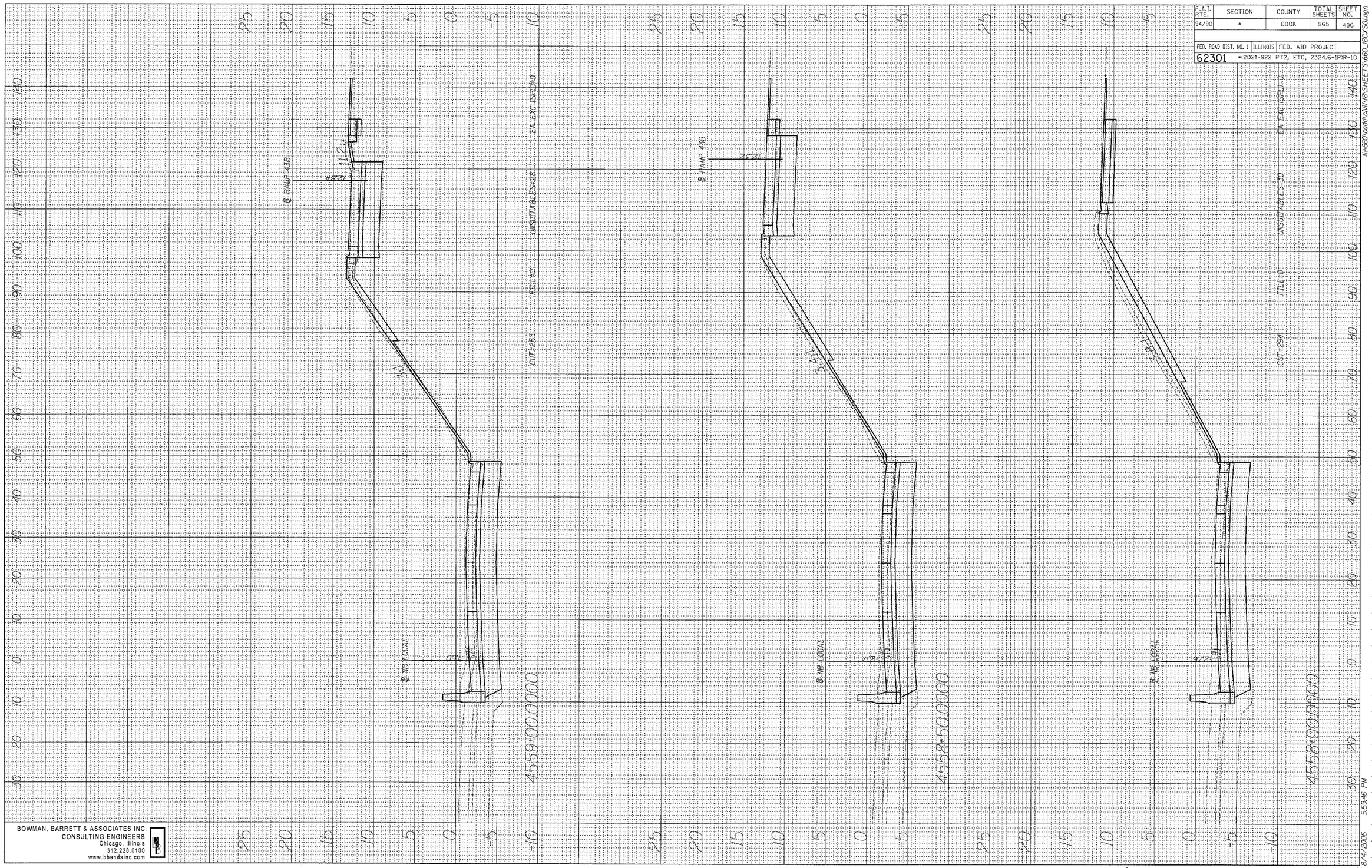

FINAL SURVEY	BY	DATE
SURVEYED		
PLOTTED		
TEMPLATE		
AREAS		
AREAS CHECKED		
NOTE BOOK NO.		

ORIGINAL SURVEY	BY	DATE
SURVEYED		
PLOTTED		
TEMPLATE		
AREAS		
AREAS CHECKED		
NOTE BOOK NO.		

BOWMAN, BARRETT & ASSOCIATES INC
CONSULTING ENGINEERS
Chicago, Illinois
312.228.0100
www.bbandainc.com

2 ADDENDUM 2 8/04/06

N:\660\cadd\CIVIL\8\SHEET S\660_JBC1S01.dgn 8/14/2006 5:59:46 PM

ORIGINAL SURVEY		BY	DATE
NOTE BOOK	SURVEYED		
	PLOTTED		
	TEMPLATE		
	AREAS		
NO.	AREAS CHECKED		

FINAL SURVEY		BY	DATE
NOTE BOOK	SURVEYED		
	PLOTTED		
	TEMPLATE		
	AREAS		
NO.	AREAS CHECKED		

BOWMAN BARRETT & ASSOCIATES INC
CONSULTING ENGINEERS
Chicago, Illinois
312.228.0100
www.bbaintainc.com

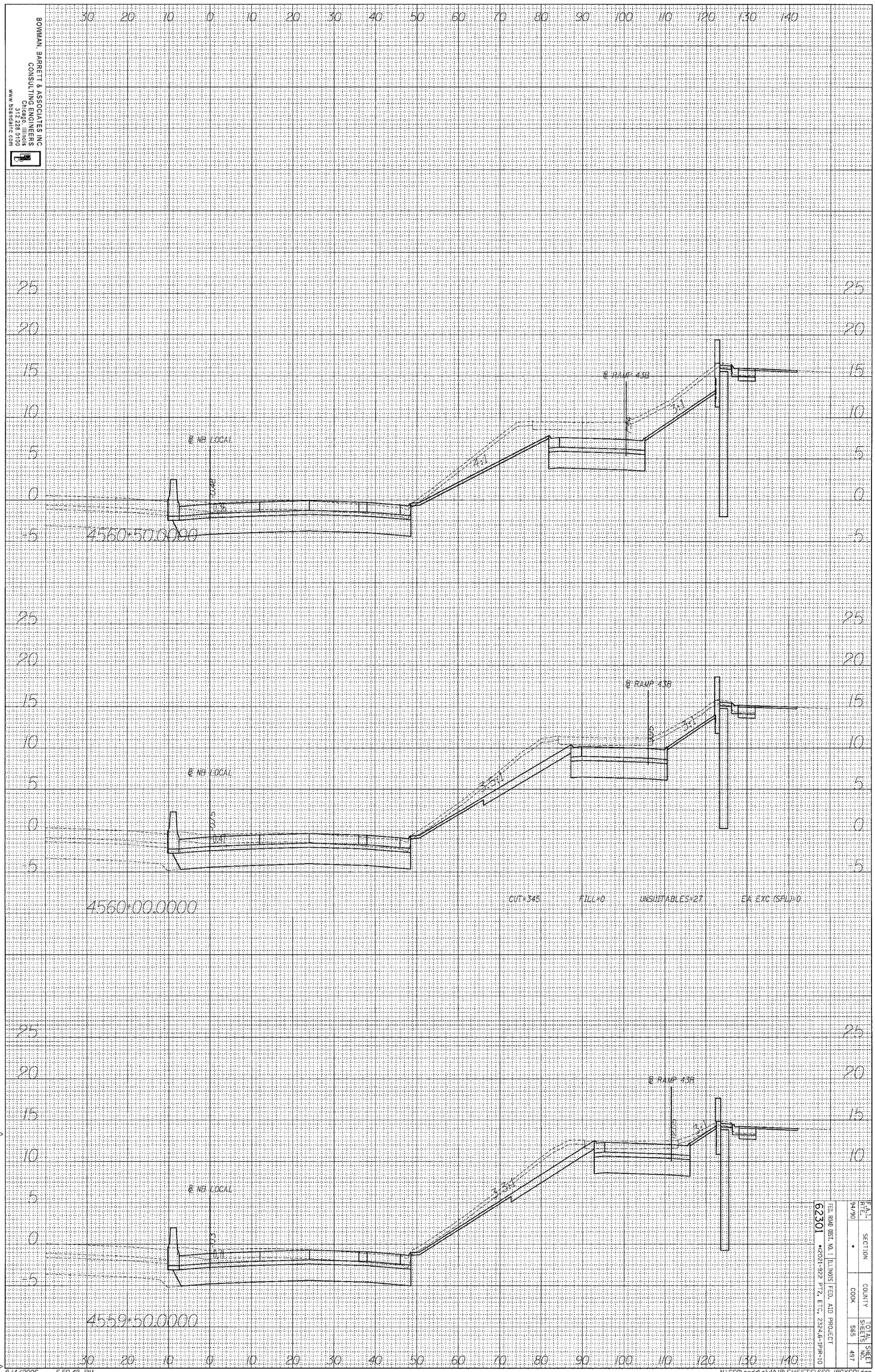

ADDENDUM 2 8/04/06

F.A.I. RTE.	SECTION	COUNTY	TOTAL SHEETS	SHEET NO.
94/90	*	COOK	565	497

FED. ROAD DIST. NO. 1 | ILLINOIS | FED. AID PROJECT

62301 *(202)-223 F 2, E 1, 2324-6-(P)-10

8/4/2006 5:59:48 PM N:\660\cadd\civil\B\SHEETS\660_JBCXS01.dgn

ORIGINAL SURVEY		BY	DATE
NOTE BOOK	SURVEYED		
	PLOTTED		
	TEMPLATE		
	AREAS		
NO.	AREAS CHECKED		

FINAL SURVEY		BY	DATE
NOTE BOOK	SURVEYED		
	PLOTTED		
	TEMPLATE		
	AREAS		
NO.	AREAS CHECKED		

BOWMAN BARRETT & ASSOCIATES INC
CONSULTING ENGINEERS
Chicago, Illinois
(312) 231-0010
www.bowmanbarrettc.com

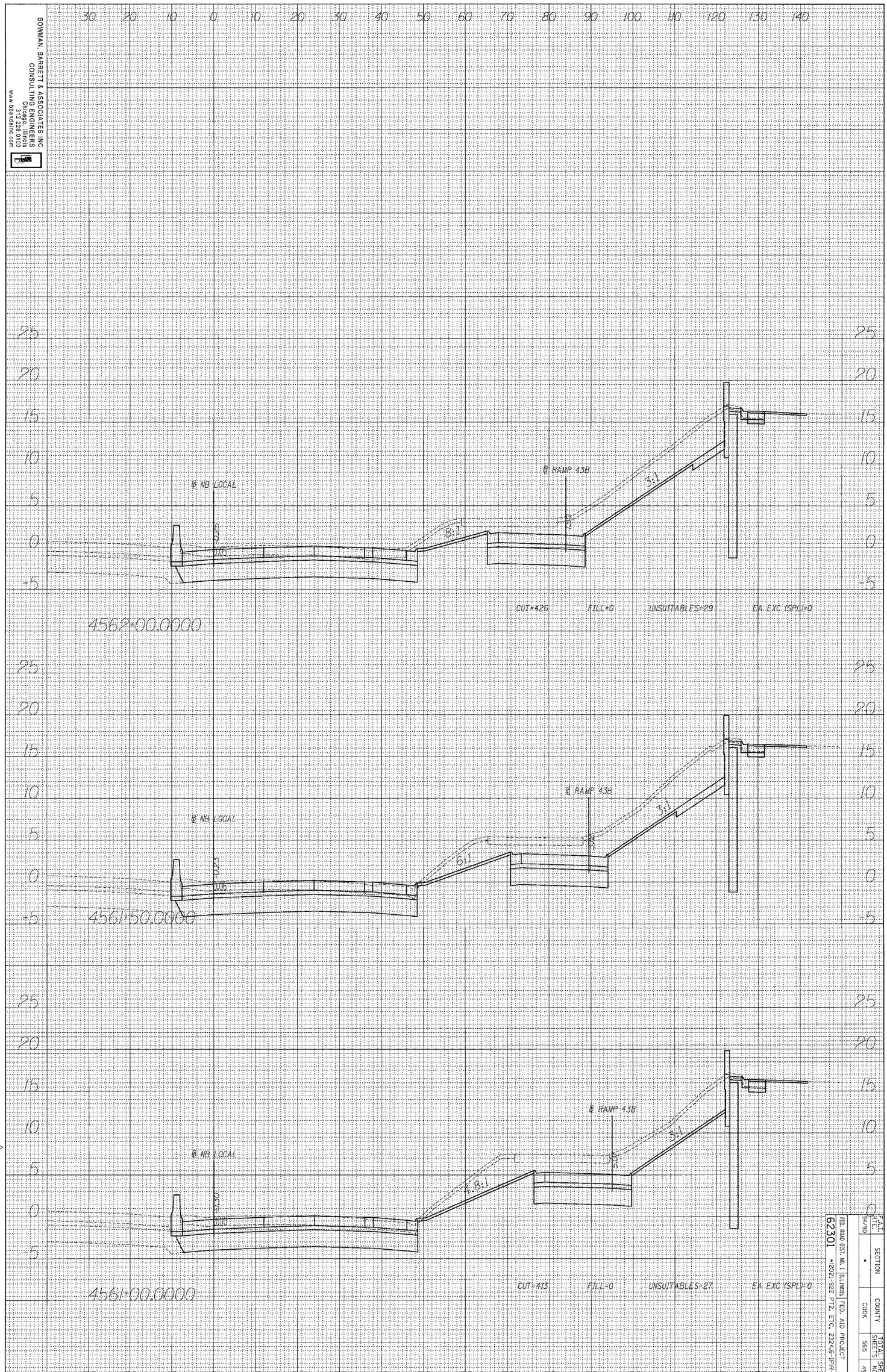

FAI SITE	SECTION	COUNTY	TOTAL SHEETS	SHEET NO.
94/90	*	COOK	565	498

FED. ROAD DIST. NO. 1 | ILLINOIS | FED. AID PROJECT

62301 *2021-326 P.Z. ETC. 2324-6-1(PI-10)

ADDENDUM 2 8/04/06

8/4/2006 5:59:51 PM

N:\660\cadd\civil\8\SHEETS\660_IBCXS01.dgn

ORIGINAL SURVEY		BY	DATE
NOTE BOOK	SURVEYED		
	PLOTTED		
	TEMPLATE		
	AREAS		
NO.	AREAS CHECKED		

FINAL SURVEY		BY	DATE
NOTE BOOK	SURVEYED		
	PLOTTED		
	TEMPLATE		
	AREAS		
NO.	AREAS CHECKED		

BOWMAN, BARRETT & ASSOCIATES, INC
CONSULTING ENGINEERS
Chicago, Illinois
312.372.8100
www.bbaderinc.com

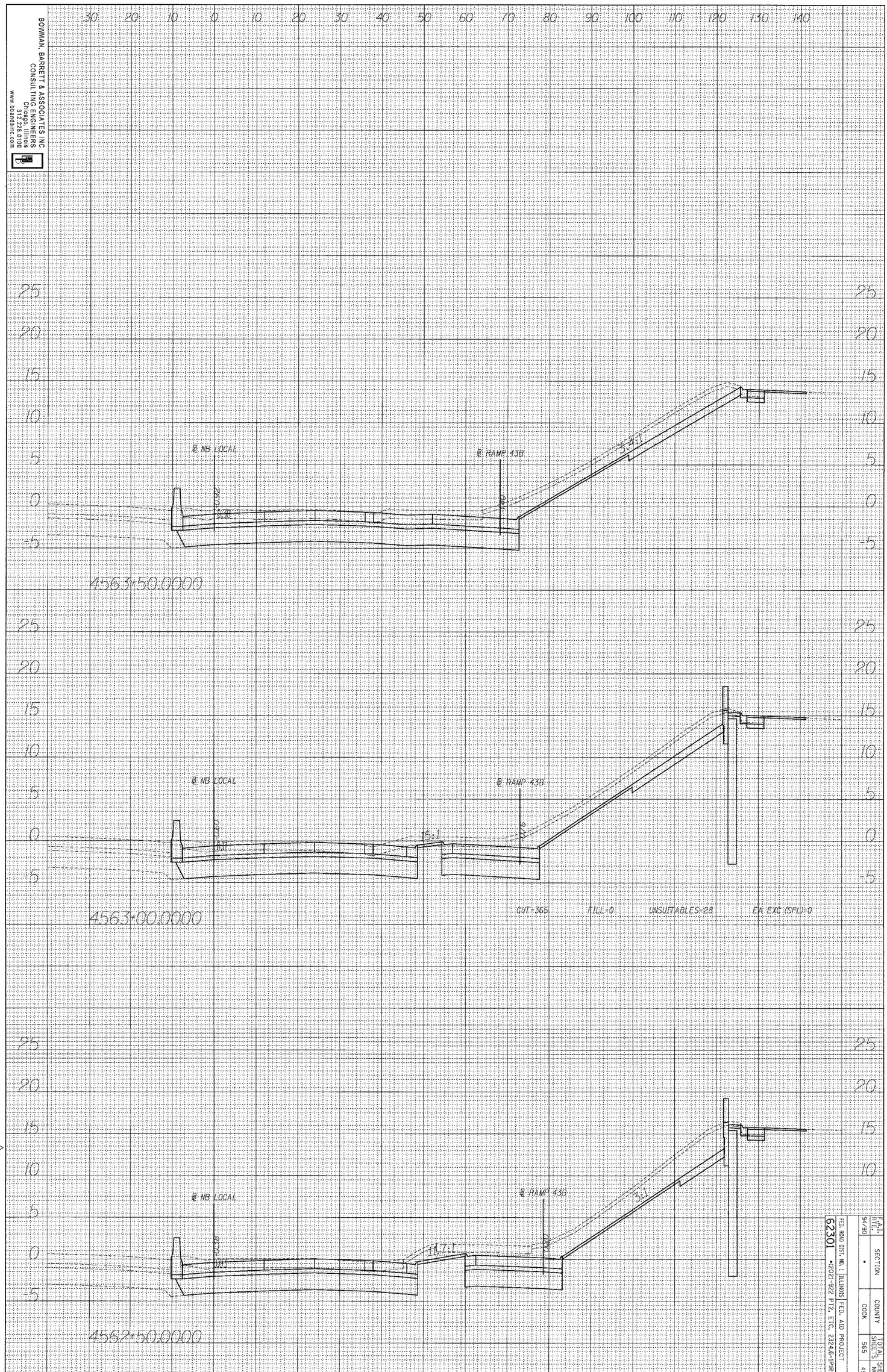

ADDENDUM 2 8/04/06

FILE NAME	SECTION	COUNTY	TOTAL SHEETS	SHEET NO.
14/90	•	COOK	565	499

FED. ROAD DIST. NO. 1 | ILLINOIS | FED. AID PROJECT

62301 •(202)-322 P12, ETC. 2324.6-IPR-10

8/4/2006 5:59:53 PM

N:\660\cadd\civil\NB\SHEETS\660_I8CXS01.dgn

F.A.I. RTE.	SECTION	COUNTY	TOTAL SHEETS	SHEET NO.
94/90	*	COOK	565	500

FED. ROAD DIST. NO. 1 | ILLINOIS | FED. AID PROJECT

62301 *(2021-922 PT2, ETC. 2324.6-1P)R-10

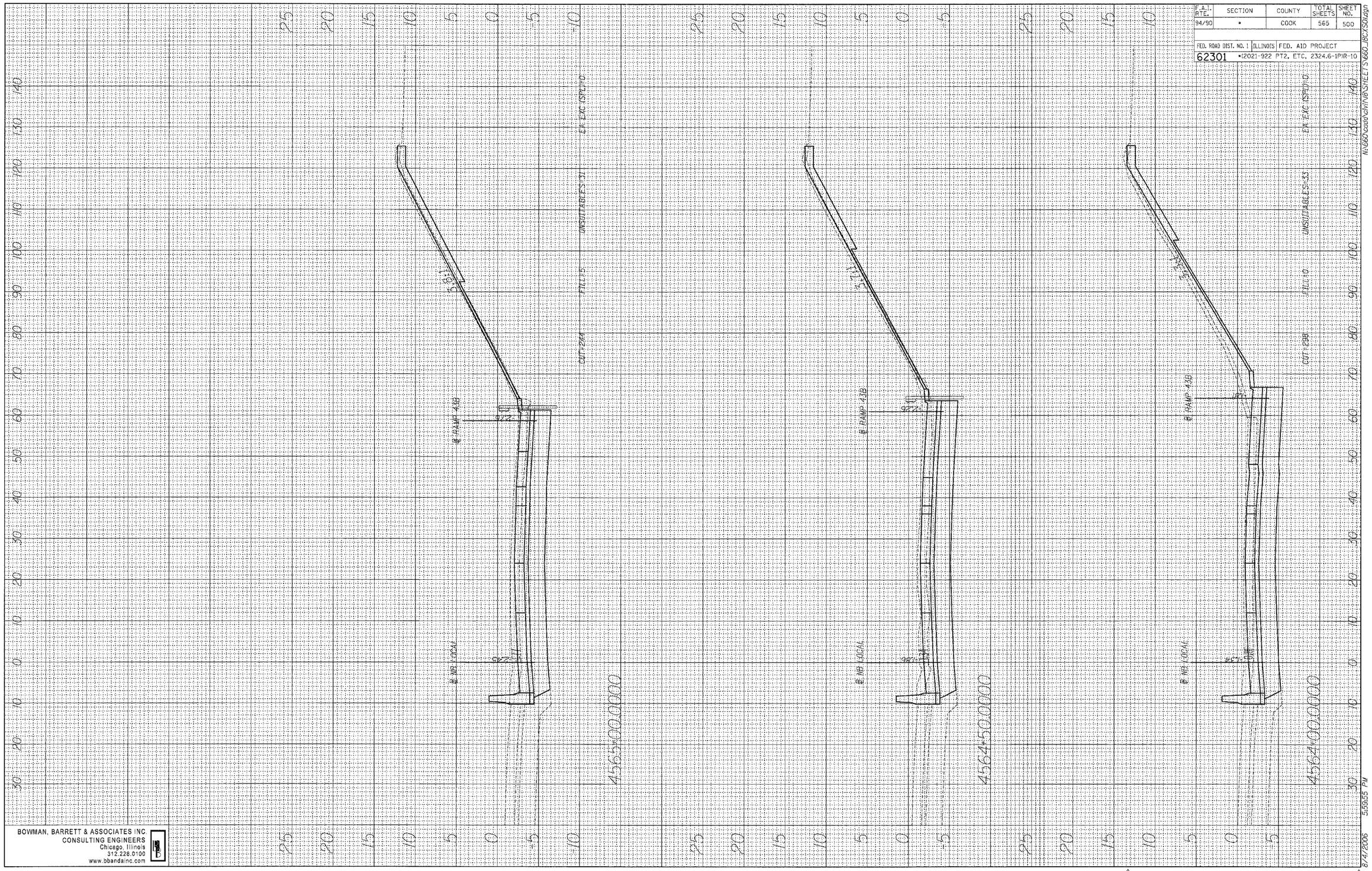

FINAL SURVEY	BY	DATE
SURVEYED		
PLOTTED		
NOTE BOOK TEMPLATE		
AREAS		
NO. AREAS CHECKED		

ORIGINAL SURVEY	BY	DATE
SURVEYED		
PLOTTED		
NOTE BOOK TEMPLATE		
AREAS		
NO. AREAS CHECKED		

BOWMAN, BARRETT & ASSOCIATES INC.
CONSULTING ENGINEERS
Chicago, Illinois
312.228.0100
www.bbandainc.com

N:\660\cadd\civil\BSHEETS\660_18CXS01.dgn

8/4/2006 5:59:55 PM

2 ADDENDUM 2 8/04/06 2

F.A.I. RTE.	SECTION	COUNTY	TOTAL SHEETS	SHEET NO.
94/90	*	COOK	565	501

FED. ROAD DIST. NO. 1 | ILLINOIS | FED. AID PROJECT

62301 *(2021-922 PT2, ETC. 2324.6-1P)R-10

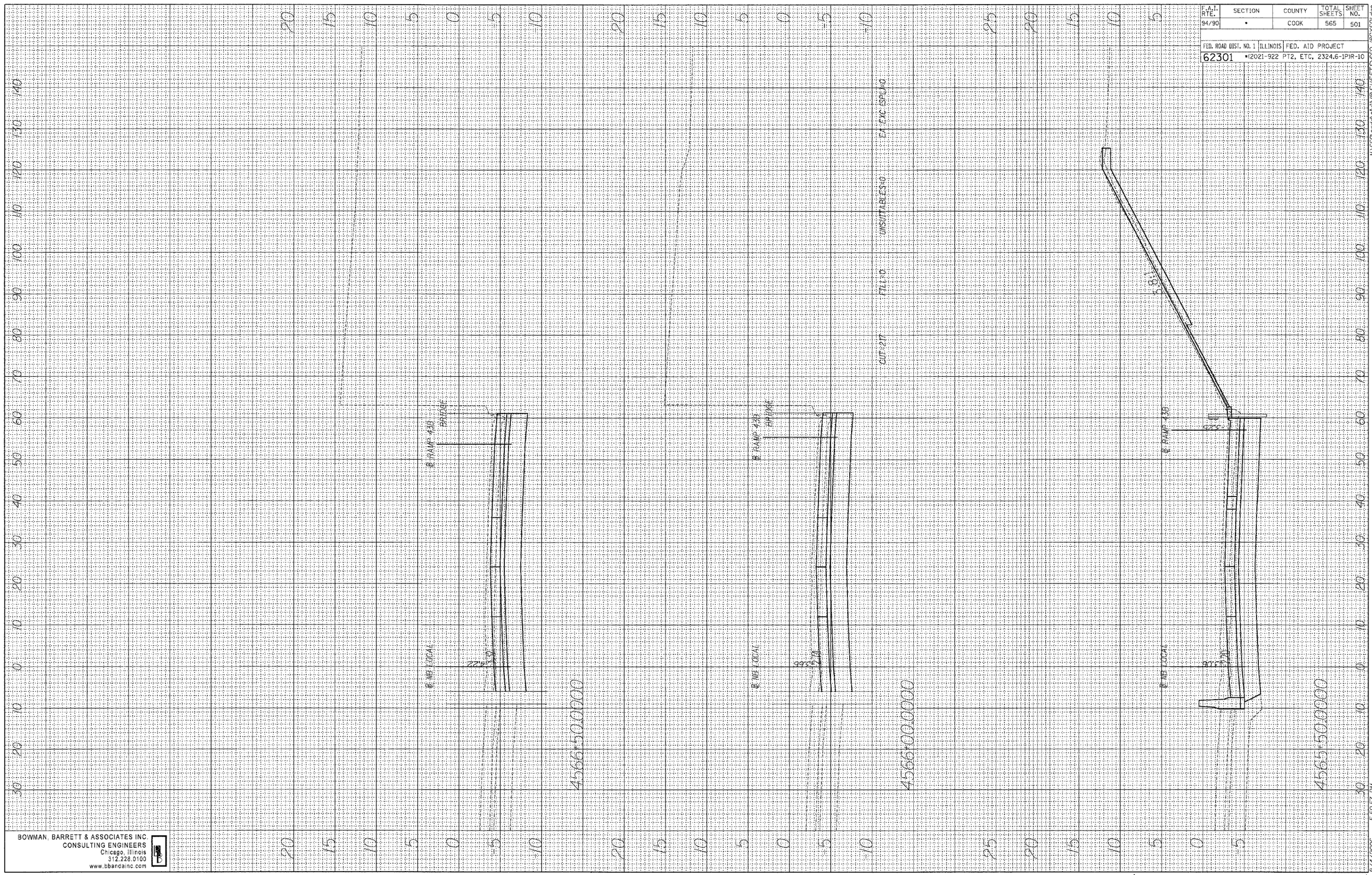

FINAL SURVEY	BY	DATE
SURVEYED		
PLOTTED		
TEMPLATE		
AREAS		
AREAS CHECKED		
NOTE BOOK		
NO.		

ORIGINAL SURVEY	BY	DATE
SURVEYED		
PLOTTED		
TEMPLATE		
AREAS		
AREAS CHECKED		
NOTE BOOK		
NO.		

BOWMAN, BARRETT & ASSOCIATES INC.
CONSULTING ENGINEERS
Chicago, Illinois
312.228.0100
www.bbandainc.com

ADDENDUM 2 8/04/06

N:\660\cadd\CIVIL\SHEETS\660_JACKSO1.dgn

8/4/2006 5:59:57 PM

ORIGINAL SURVEY		BY	DATE
NOTE BOOK	SURVEYED		
	PLOTTED		
	TEMPLATE		
	AREAS		
NO.	AREAS CHECKED		

FINAL SURVEY		BY	DATE
NOTE BOOK	SURVEYED		
	PLOTTED		
	TEMPLATE		
	AREAS		
NO.	AREAS CHECKED		

BOWMAN BARRETT & ASSOCIATES INC
CONSULTING ENGINEERS
Chicago 312.201.0003
Oak Lawn 708.224.0100
www.bbarbarinc.com

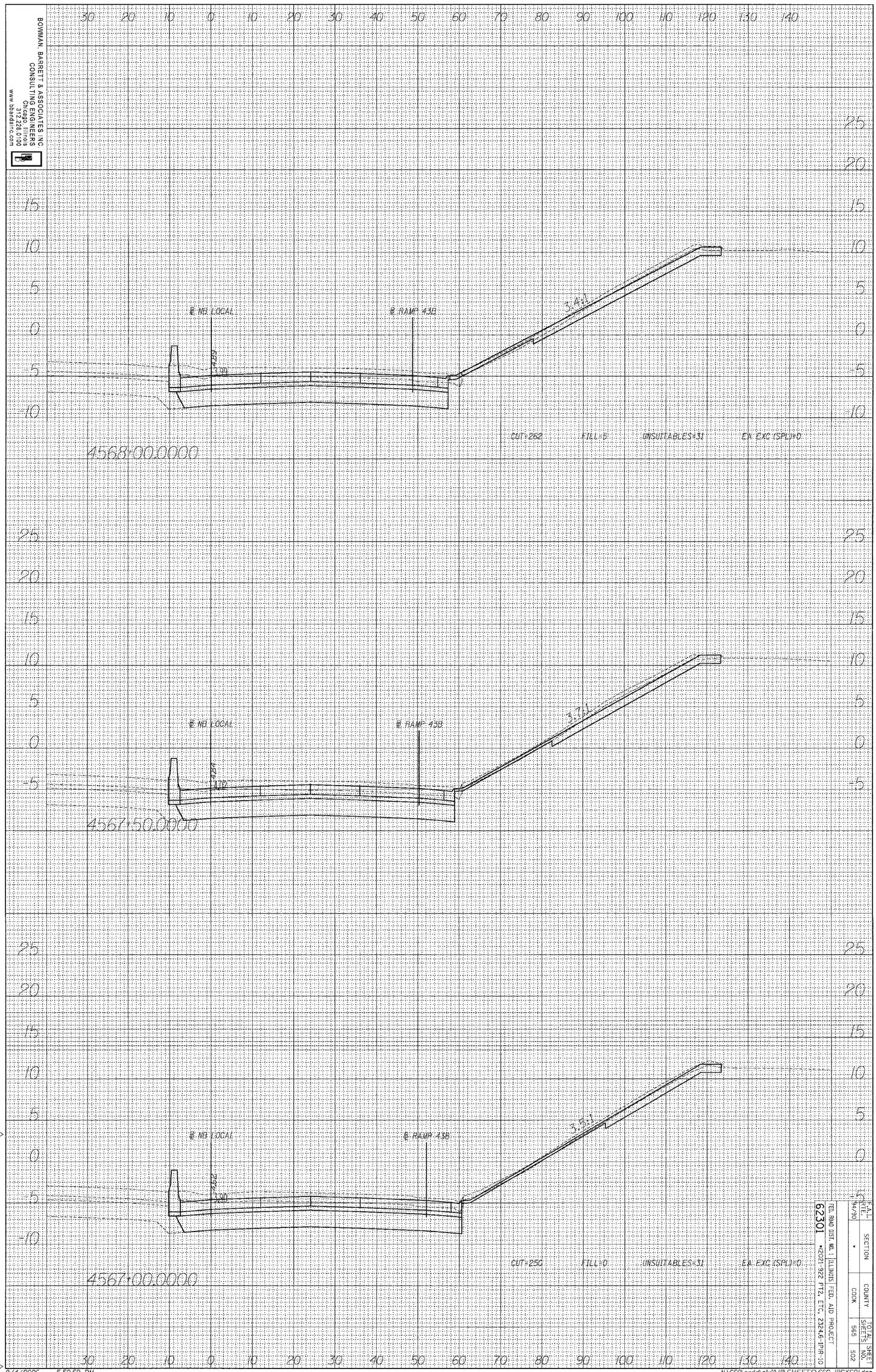

F.A.I.	SECTION	COUNTY	TOTAL SHEETS	SHEET NO.
64/90	*	COOK	565	502

TOL ROAD DIST. NO. 1 ILLINOIS FED. AID PROJECT
62301 *(2021-32) FTZ, ETC. 2324-6-1PR-10

ADDENDUM 2 8/04/06

8/4/2006 5:59:59 PM N:\660\cadd\civil\8\SHEETS\660_18CXS01.dgn

F.A.I. RTE.	SECTION	COUNTY	TOTAL SHEETS	SHEET NO.
34/90	*	COOK	565	503

FED. ROAD DIST. NO. 1 | ILLINOIS | FED. AID PROJECT

62301 *(2021-922 PT2, ETC. 2324.6-1PIR-10

N:\660\cadd\CNTR\SHEETS\660_IBC\S01.dgn

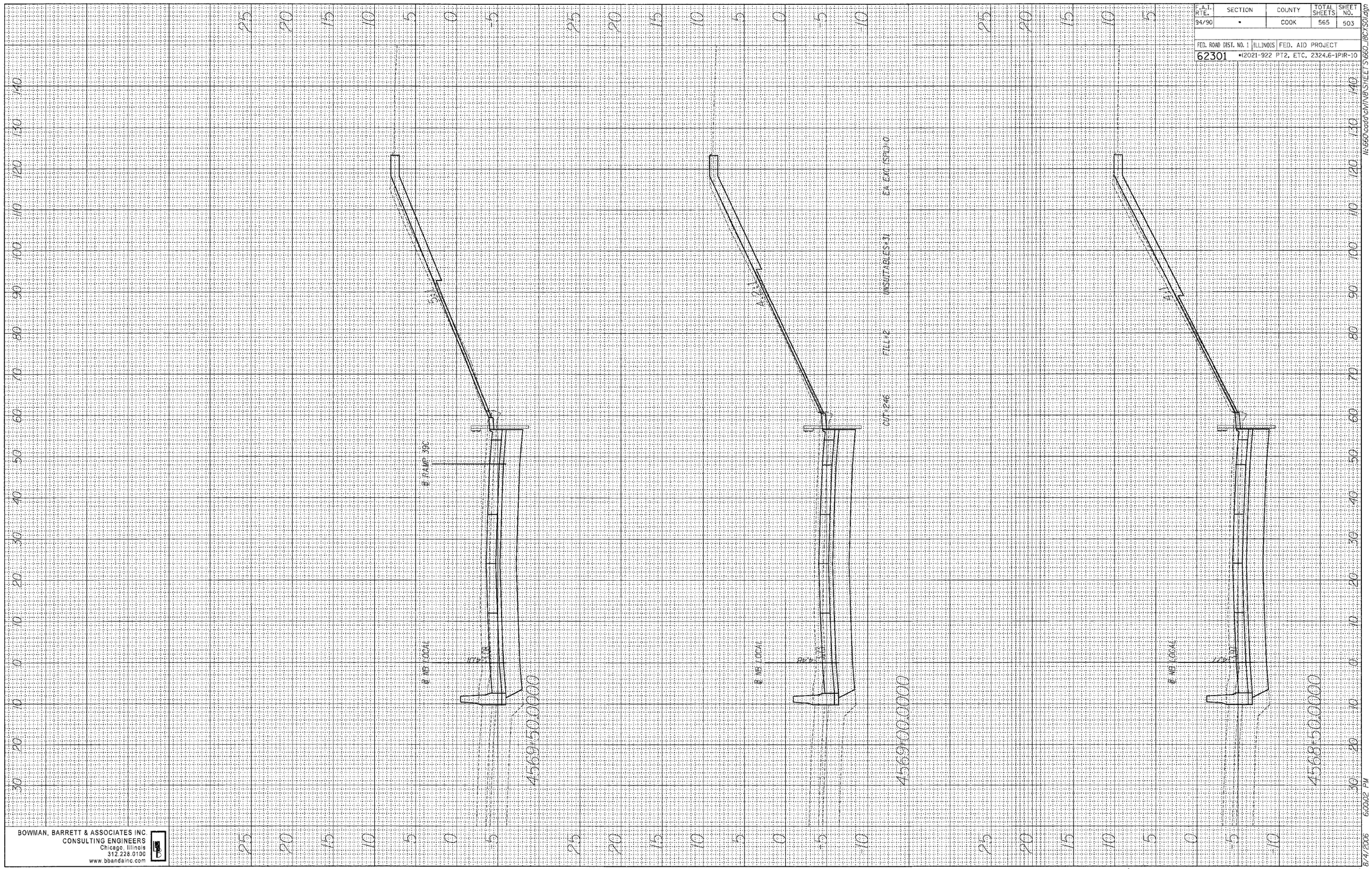

FINAL SURVEY		BY	DATE
NOTE BOOK	SURVEYED		
	PLOTTED		
	TEMPLATE		
	AREAS		
NO.	AREAS CHECKED		

ORIGINAL SURVEY		BY	DATE
NOTE BOOK	SURVEYED		
	PLOTTED		
	TEMPLATE		
	AREAS		
NO.	AREAS CHECKED		

BOWMAN, BARRETT & ASSOCIATES INC.
CONSULTING ENGINEERS
Chicago, Illinois
312.228.0100
www.bbandainc.com

2 ADDENDUM 2 8/04/06 2

8/4/2006 6:00:02 PM

ORIGINAL SURVEY		BY	DATE
NOTE BOOK	SURVEYED		
	PLOTTED		
	TEMPLATE		
	AREAS		
NO.	AREAS CHECKED		

FINAL SURVEY		BY	DATE
NOTE BOOK	SURVEYED		
	PLOTTED		
	TEMPLATE		
	AREAS		
NO.	AREAS CHECKED		

BOWMAN, BARRETT & ASSOCIATES INC
CONSULTING ENGINEERS
Chicago, Illinois
312.228.0100
www.bbandainc.com

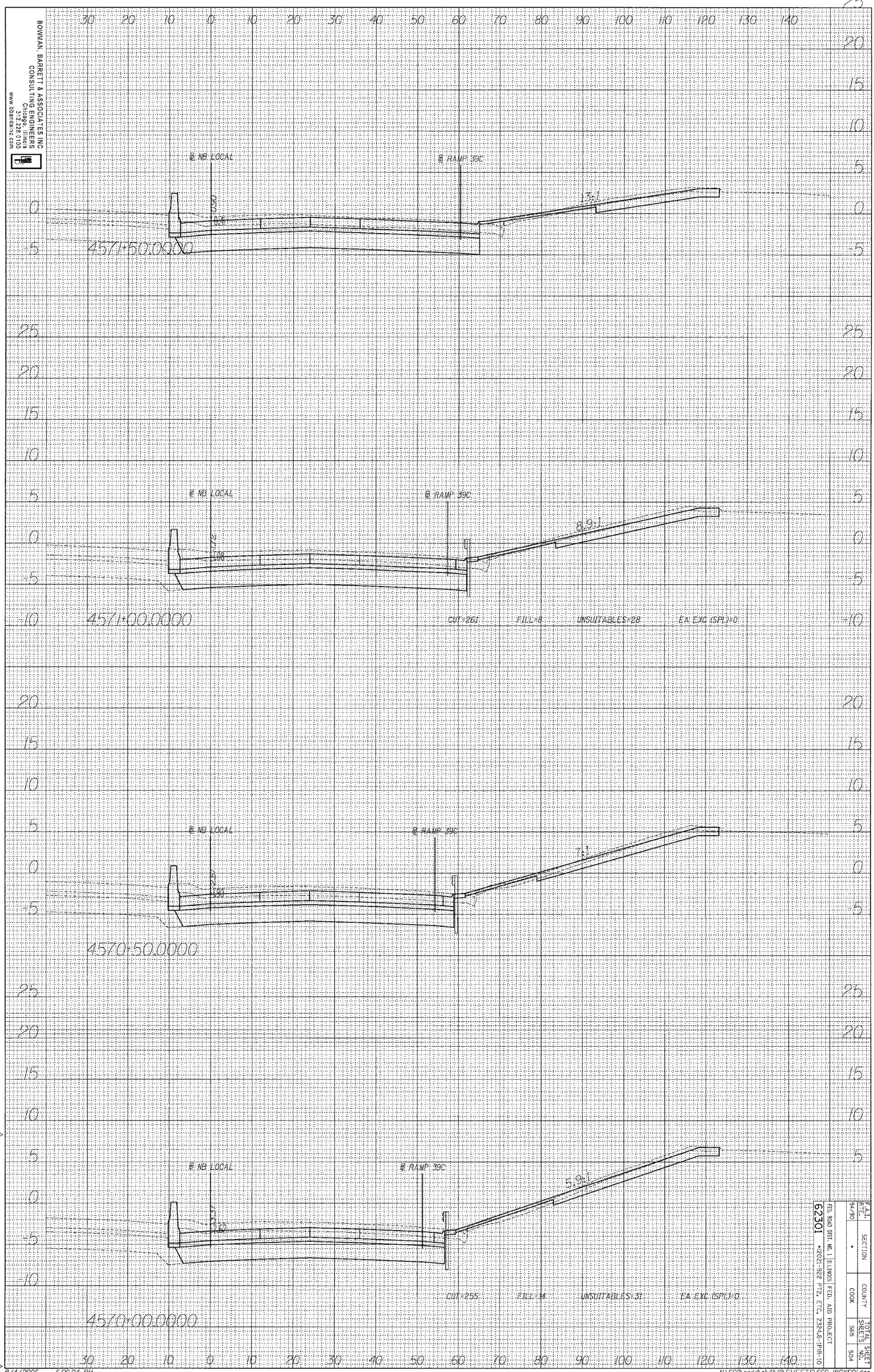

ADDENDUM 2 8/04/06

F.A.I. RTE.	SECTION	COUNTY	TOTAL SHEET NO.	SHEET NO.
94/90	*	COOK	565	504

FED. ROAD DIST. NO. 1 ILLINOIS FED. AID PROJECT
62301 *2012-922 PTB, ETC. 232-6-IPR-10

8/4/2006 6:00:04 PM

N:\660\cadd\civil\NB\SHEETS\660_JBCXS01.dgn

ORIGINAL SURVEY		BY	DATE
NOTE BOOK	SURVEYED		
	PLOTTED		
	TEMPLATE		
	AREAS		
NO.	AREAS CHECKED		

FINAL SURVEY		BY	DATE
NOTE BOOK	SURVEYED		
	PLOTTED		
	TEMPLATE		
	AREAS		
NO.	AREAS CHECKED		

BOWMAN, BARRETT & ASSOCIATES INC
CONSULTING ENGINEERS
Chicago, Illinois
312.226.0100
www.bbarrattinc.com

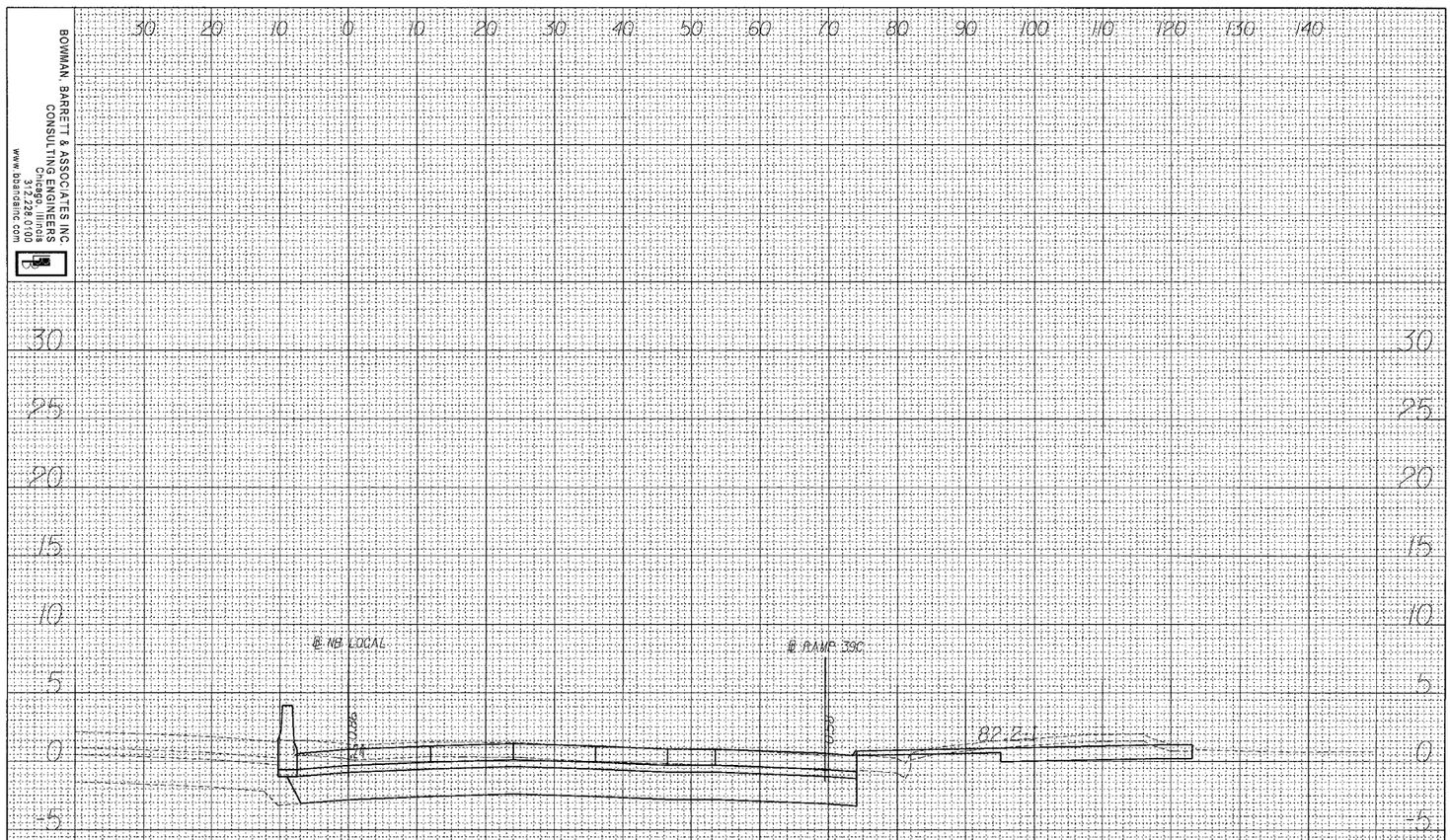

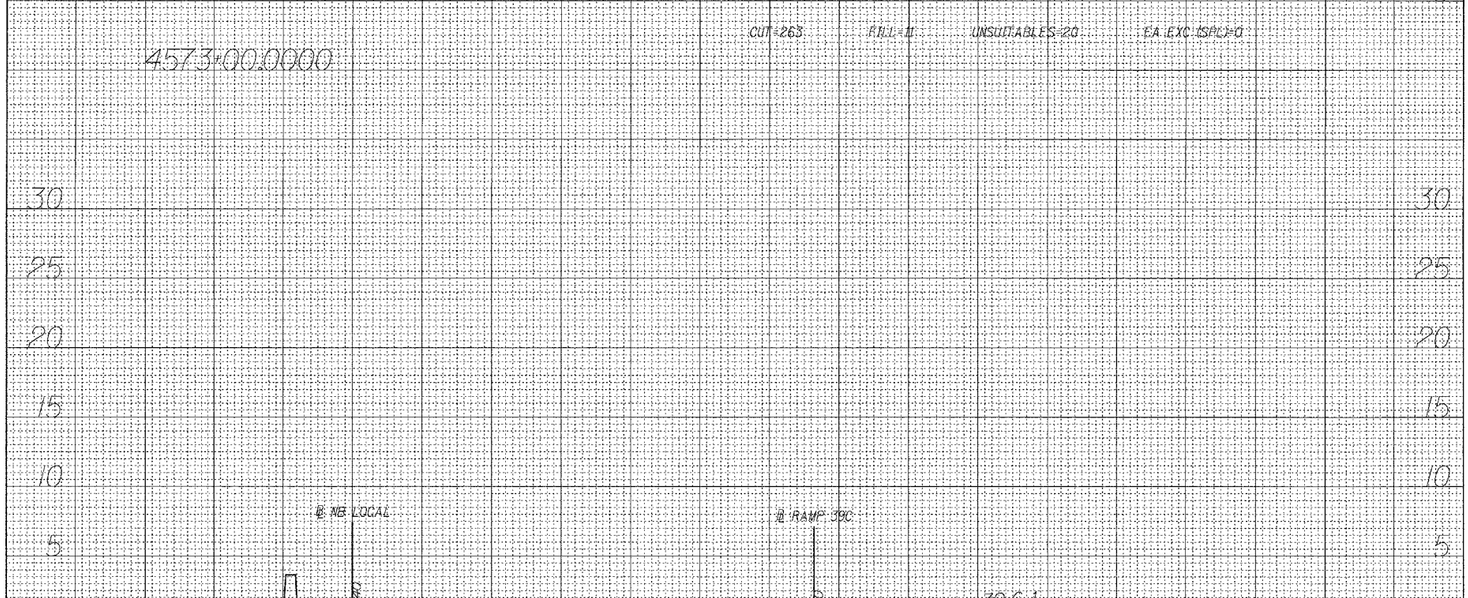

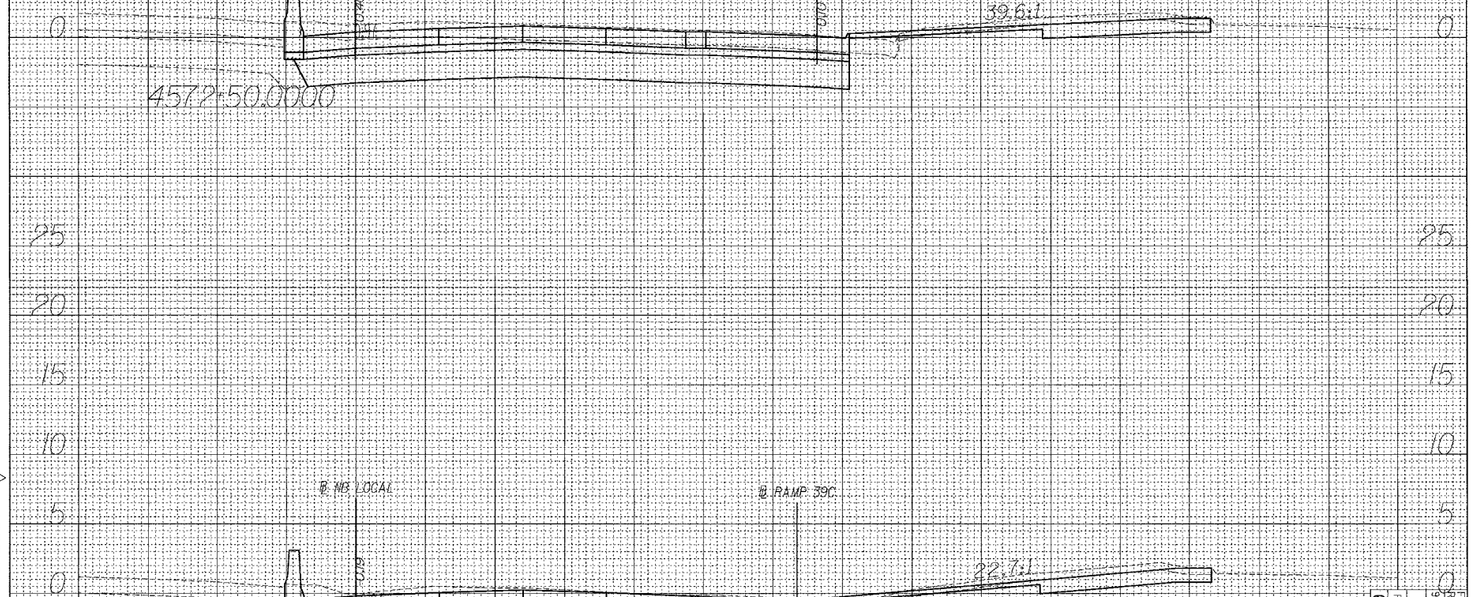

FED. ROAD DIST. NO. 1	ILLINOIS	FED. AID PROJECT	COUNTY	TOTAL SHEETS	SHEET NO.
62301	•(2021-322 PTA, ETC. 2324.6-1PR-10		COOK	565	505

SECTION •

F.A.I. RTE. 64/90

ADDENDUM 2 8/04/06

8/4/2006 6:00:06 PM

N:\660\cadd\civil\B\SHEETS\660_18CX501.dgn

ORIGINAL SURVEY		BY	DATE
NOTE BOOK	SURVEYED		
	PLOTTED		
	TEMPLATE		
	AREAS		
NO.	AREAS CHECKED		

FINAL SURVEY		BY	DATE
NOTE BOOK	SURVEYED		
	PLOTTED		
	TEMPLATE		
	AREAS		
NO.	AREAS CHECKED		

BOWMAN, BARRETT & ASSOCIATES INC
CONSULTING ENGINEERS
Chicago, Illinois 60606
312.236.0100
www.bbaengrinc.com

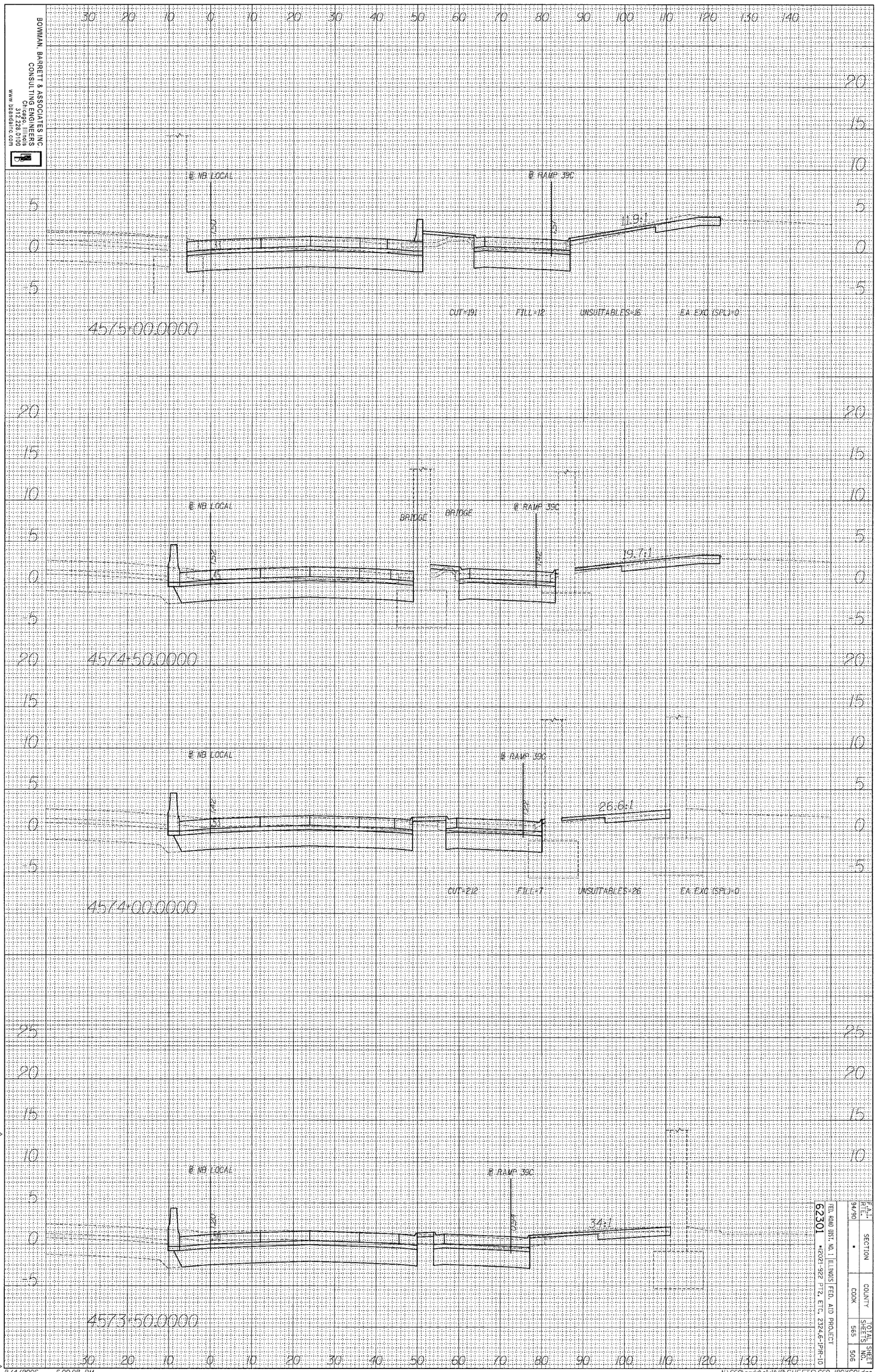

F.A.I. RTE.	SECTION	COUNTY	TOTAL SHEETS	SHEET NO.
94/90	*	COOK	565	506

TEL. ROAD DIST. NO. 1 ILLINOIS FED. AID PROJECT

62301 *(2021-322 PTB, ETC. 2324-6-1PR-10

ADDENDUM 2 8/04/06

8/4/2006 6:00:08 PM

N:\660\cadd\CIVIN\SHEETS\660_18CXSO1.dgn

ORIGINAL SURVEY		BY	DATE
NOTE BOOK	SURVEYED		
	PLOTTED		
	TEMPLATE		
	AREAS		
NO.	AREAS CHECKED		

FINAL SURVEY		BY	DATE
NOTE BOOK	SURVEYED		
	PLOTTED		
	TEMPLATE		
	AREAS		
NO.	AREAS CHECKED		

BOWMAN, BARRETT & ASSOCIATES INC.
CONSULTING ENGINEERS
Chicago, Illinois
312.228.0100
www.bbandainc.com

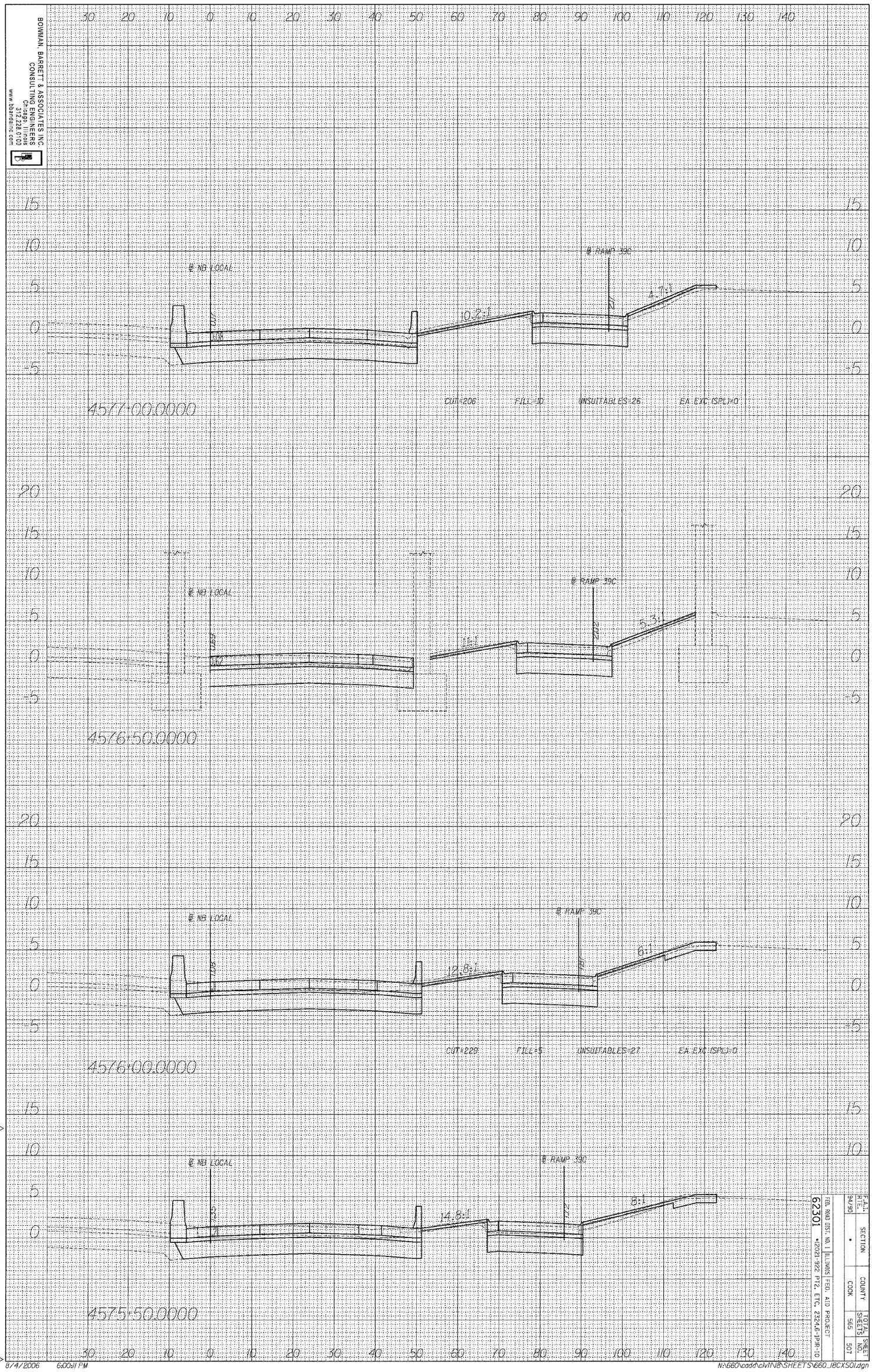

F.A.I. RTE.	SECTION	COUNTY	TOTAL SHEETS	SHEET NO.
94/95	*	COOK	565	507

FED. ROAD DIST. NO. 1 ILLINOIS FED. AID PROJECT

62301 *(2021) 92 PTL, ETC. 232,4,6-1PR-10

ADDENDUM 2 8/04/06

8/4/2006 6:00:11 PM

N:\660\cadd\CIVIN8\SHEETS\660_IBCXS01.dgn

ORIGINAL SURVEY		BY	DATE
NOTE BOOK	SURVEYED		
	PLOTTED		
	TEMPLATE		
	AREAS		
NO.	AREAS CHECKED		

FINAL SURVEY		BY	DATE
NOTE BOOK	SURVEYED		
	PLOTTED		
	TEMPLATE		
	AREAS		
NO.	AREAS CHECKED		

BOWMAN, BARRETT & ASSOCIATES INC
CONSULTING ENGINEERS
Chicago, Illinois
312.228.0100
www.bbaengineers.com

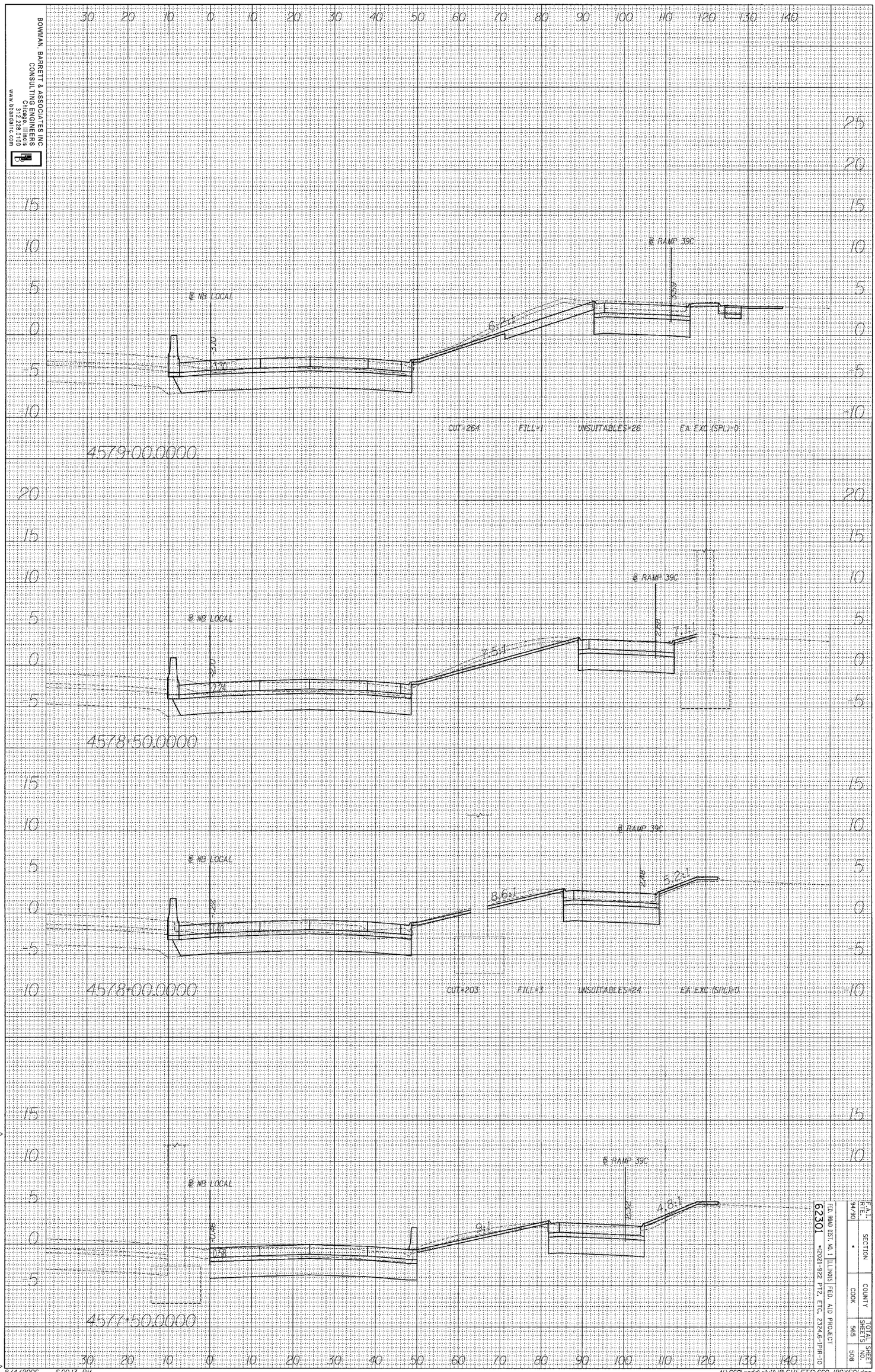

ADDENDUM 2 8/04/06

F.A.I. RTE.	SECTION	COUNTY	TOTAL SHEETS	SHEET NO.
94/90	•	COOK	565	508

FED. ROAD DIST. NO. 1 ILLINOIS FED. AID PROJECT

62301 •(2021-922 PT2, FTC, 232-4.6-1P.R-10

8/4/2006 6:00:13 PM

N:\660\cadd\civil\NB\SHEETS\660_18CXS01.dgn

ORIGINAL SURVEY		BY	DATE
NOTE BOOK	SURVEYED		
	PLOTTED		
	TEMPLATE		
	AREAS		
NO.	AREAS CHECKED		

FINAL SURVEY		BY	DATE
NOTE BOOK	SURVEYED		
	PLOTTED		
	TEMPLATE		
	AREAS		
NO.	AREAS CHECKED		

BOWMAN, BARRETT & ASSOCIATES INC
CONSULTING ENGINEERS
Chicago, Illinois
312.226.0100
www.bbarrettinc.com

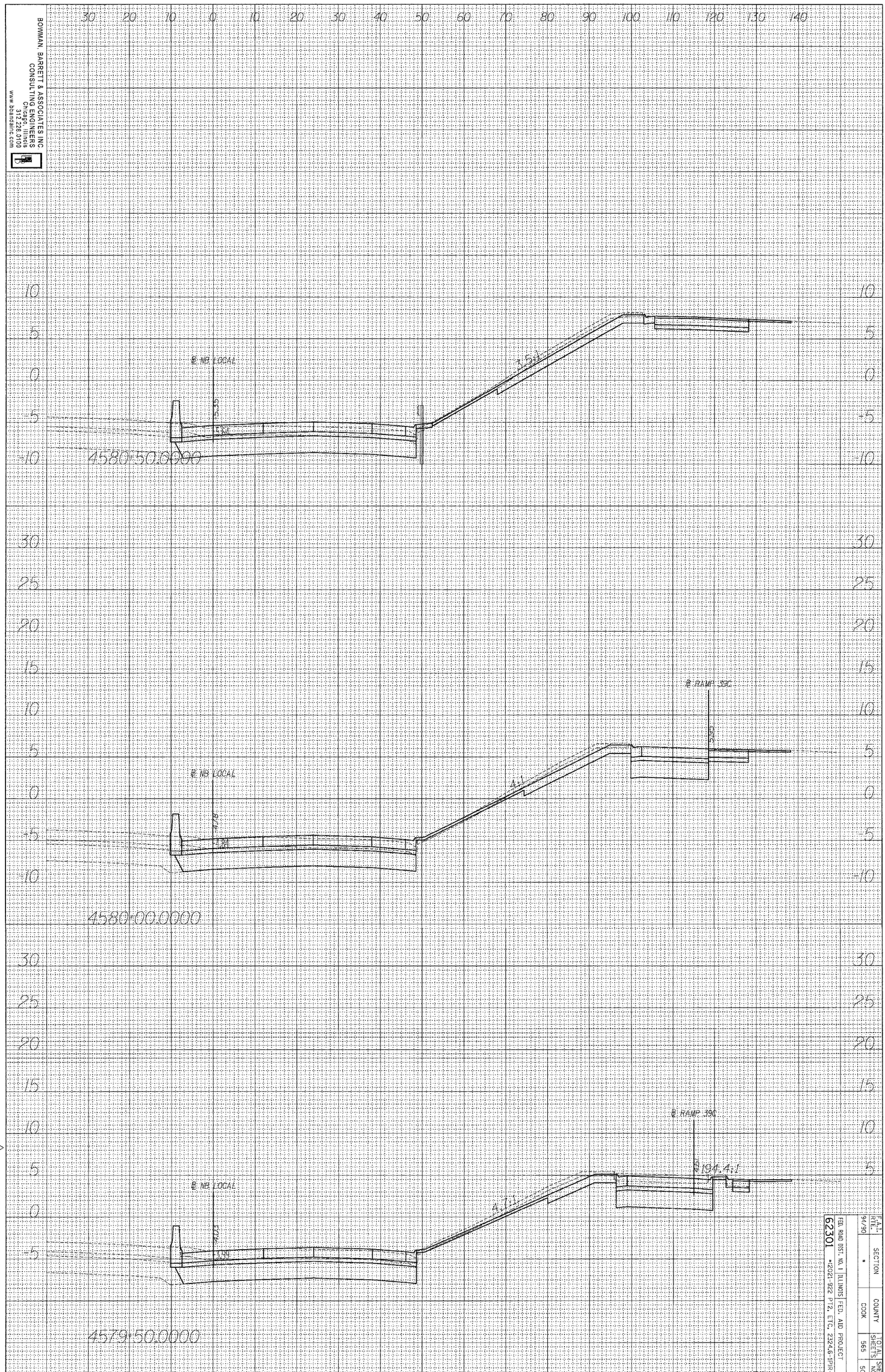

ADDENDUM 2 8/04/06

FAI RTE	SECTION	COUNTY	TOTAL SHEETS	SHEET NO.
94/90	*	COOK	565	509

FED. ROAD DIST. NO. 1 ILLINOIS FED. AID PROJECT

62301 *62021-922 P12, ETC. 2324.6 1PR-10

8/4/2006 6:00:15 PM N:\660\cadd\civil\8\SHEETS\660_I8CX501.dgn

F.A.I. RTE.	SECTION	COUNTY	TOTAL SHEETS	SHEET NO.
94/90	*	COOK	565	510

FED. ROAD DIST. NO. 1 | ILLINOIS | FED. AID PROJECT

62301 *(2021-922 PT2, ETC. 2324.6-1P)R-10

FINAL SURVEY	BY	DATE
SURVEYED		
PLOTTED		
TEMPLATE		
AREAS		
AREAS CHECKED		
NOTE BOOK NO.		

ORIGINAL SURVEY	BY	DATE
SURVEYED		
PLOTTED		
TEMPLATE		
AREAS		
AREAS CHECKED		
NOTE BOOK NO.		

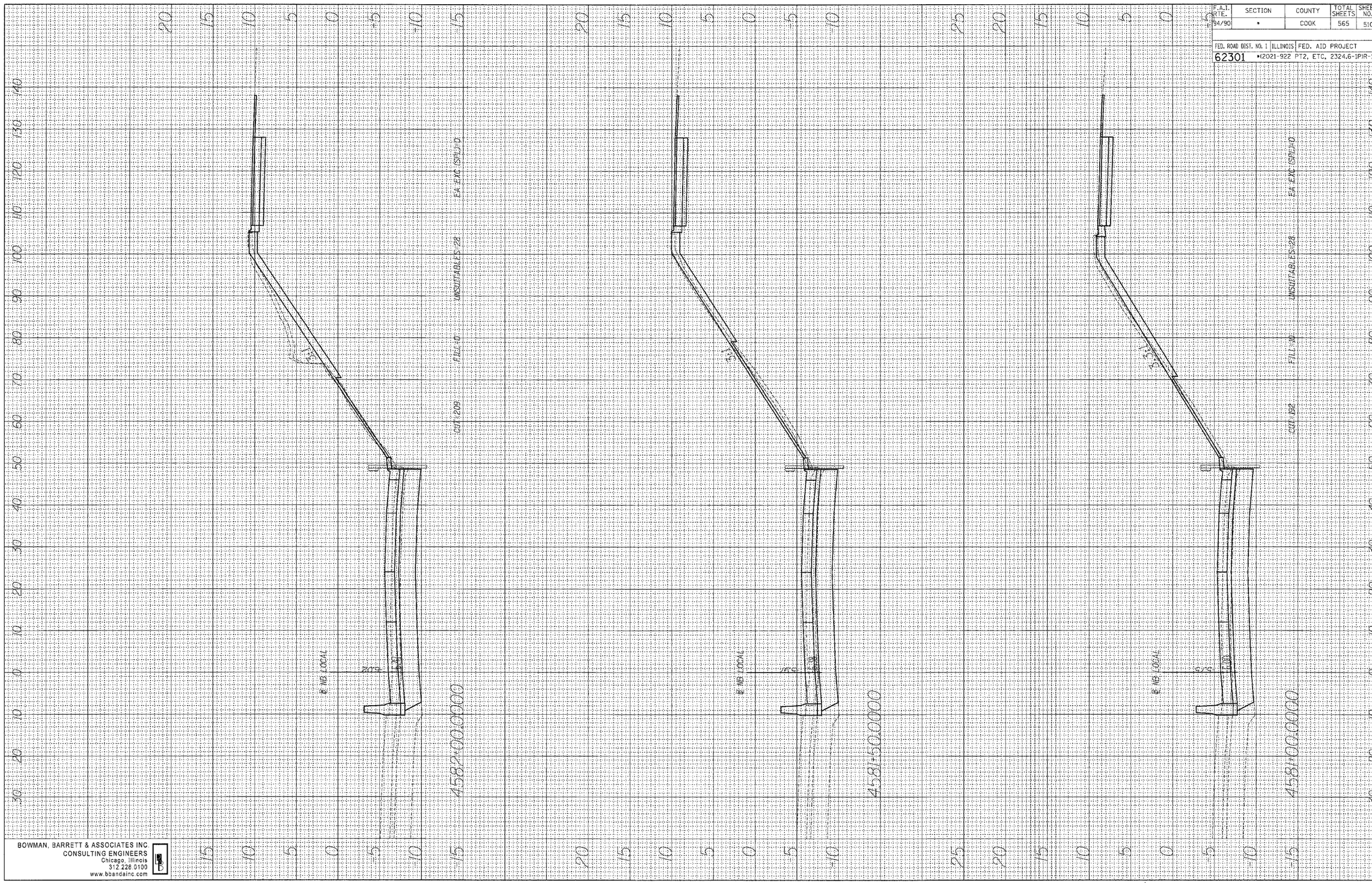

BOWMAN, BARRETT & ASSOCIATES INC
CONSULTING ENGINEERS
Chicago, Illinois
312.228.0100
www.bbandainc.com

ADDENDUM 2 8/04/06

N:\660\cadd\civil\B\SHEETS\660_18C\SOI.dgn

8/4/2006 6:00:57 PM

F.A.I. RTE.	SECTION	COUNTY	TOTAL SHEETS	SHEET NO.
94/90	*	COOK	565	511

FED. ROAD DIST. NO. 1 | ILLINOIS | FED. AID PROJECT

62301 *(2021-922 PT2, ETC. 2324.6-1P)R-10

N:\660\cadd\civil\B\SHEETS\660_1BC1SOL.dgn

FINAL SURVEY	BY	DATE
SURVEYED		
PLOTTED		
NOTE BOOK TEMPLATE		
AREAS		
NO. AREAS CHECKED		

ORIGINAL SURVEY	BY	DATE
SURVEYED		
PLOTTED		
NOTE BOOK TEMPLATE		
AREAS		
NO. AREAS CHECKED		

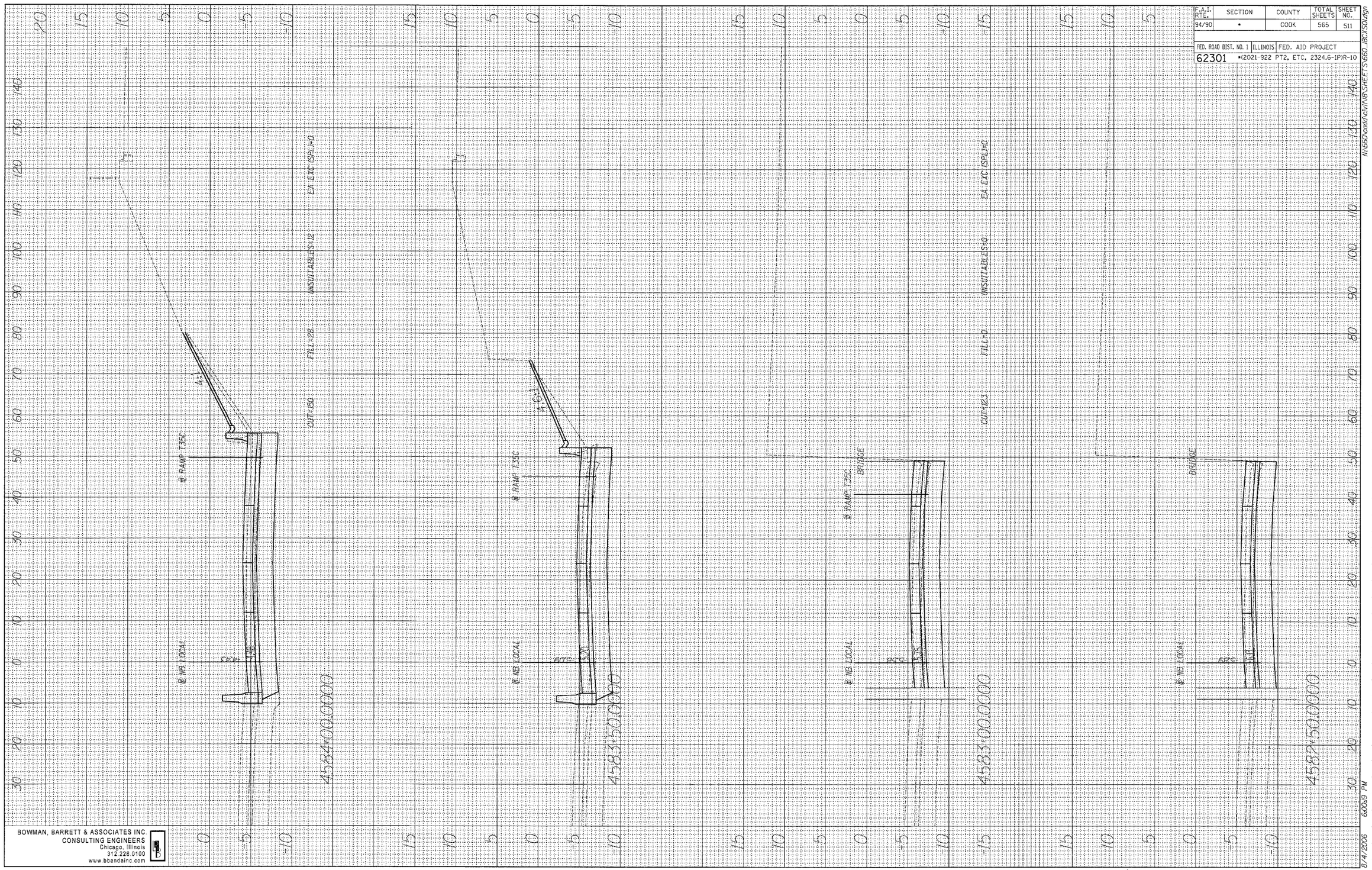

BOWMAN, BARRETT & ASSOCIATES INC
CONSULTING ENGINEERS
Chicago, Illinois
312.228.0100
www.bbandsinc.com

8/4/2006 6:00:9 PM

2 ADDENDUM 2 8/04/06 2

F.A.I. RTE.	SECTION	COUNTY	TOTAL SHEETS	SHEET NO.
94/90	*	COOK	565	512

FED. ROAD DIST. NO. 1 | ILLINOIS | FED. AID PROJECT

62301 *(2021-922 PT2, ETC. 2324.6-1P)R-10

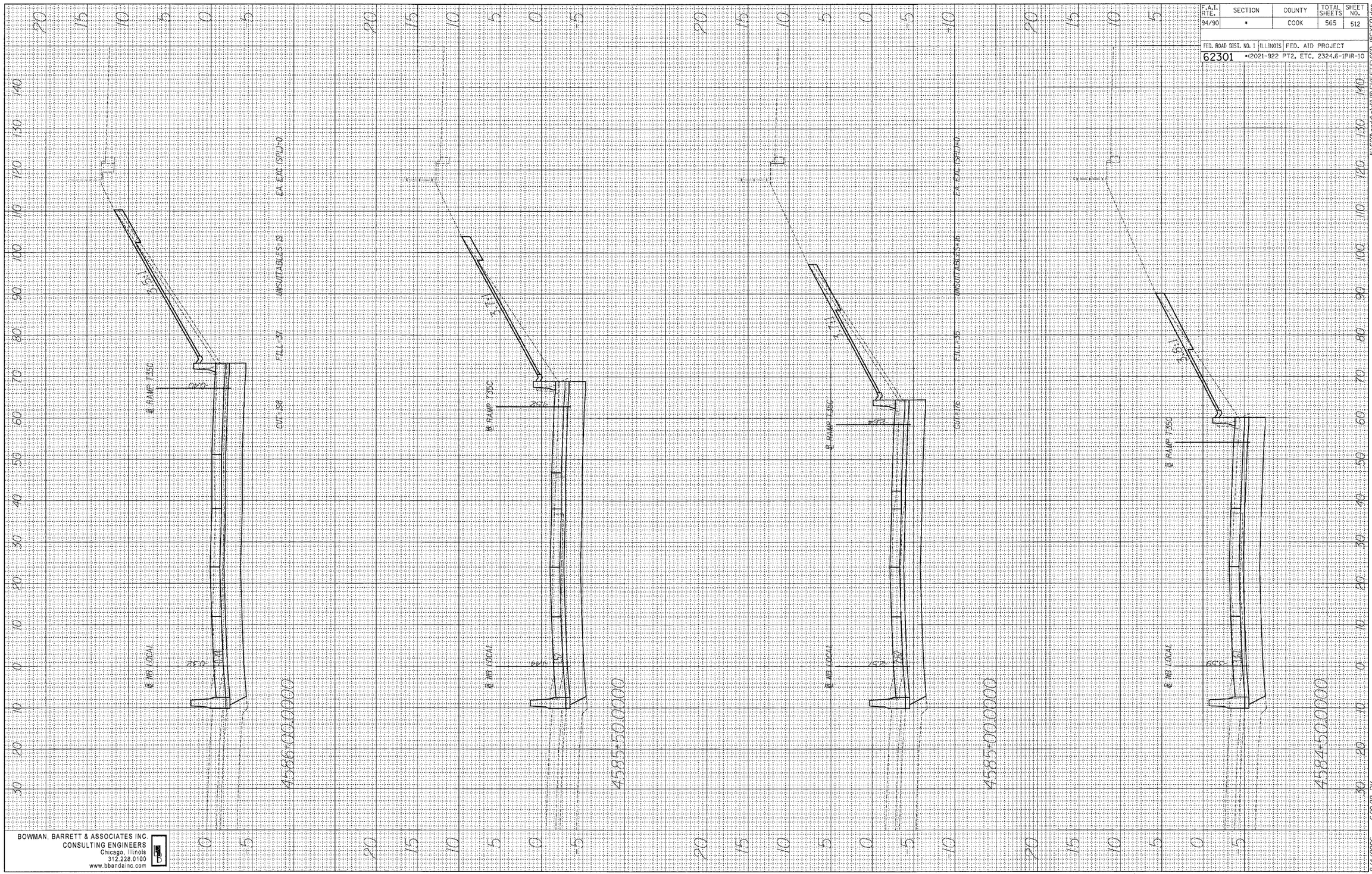

FINAL SURVEY	BY	DATE
SURVEYED		
PLOTTED		
NOTE BOOK TEMPLATE		
AREAS		
NO. AREAS CHECKED		

ORIGINAL SURVEY	BY	DATE
SURVEYED		
PLOTTED		
NOTE BOOK TEMPLATE		
AREAS		
NO. AREAS CHECKED		

BOWMAN, BARRETT & ASSOCIATES INC.
CONSULTING ENGINEERS
Chicago, Illinois
312.228.0100
www.bbandainc.com

N:\660\cadd\dgn\IB\SHEETS\660_IBCXS01.dgn

8/4/2006 6:00:22 PM

ADDENDUM 2 8/04/06

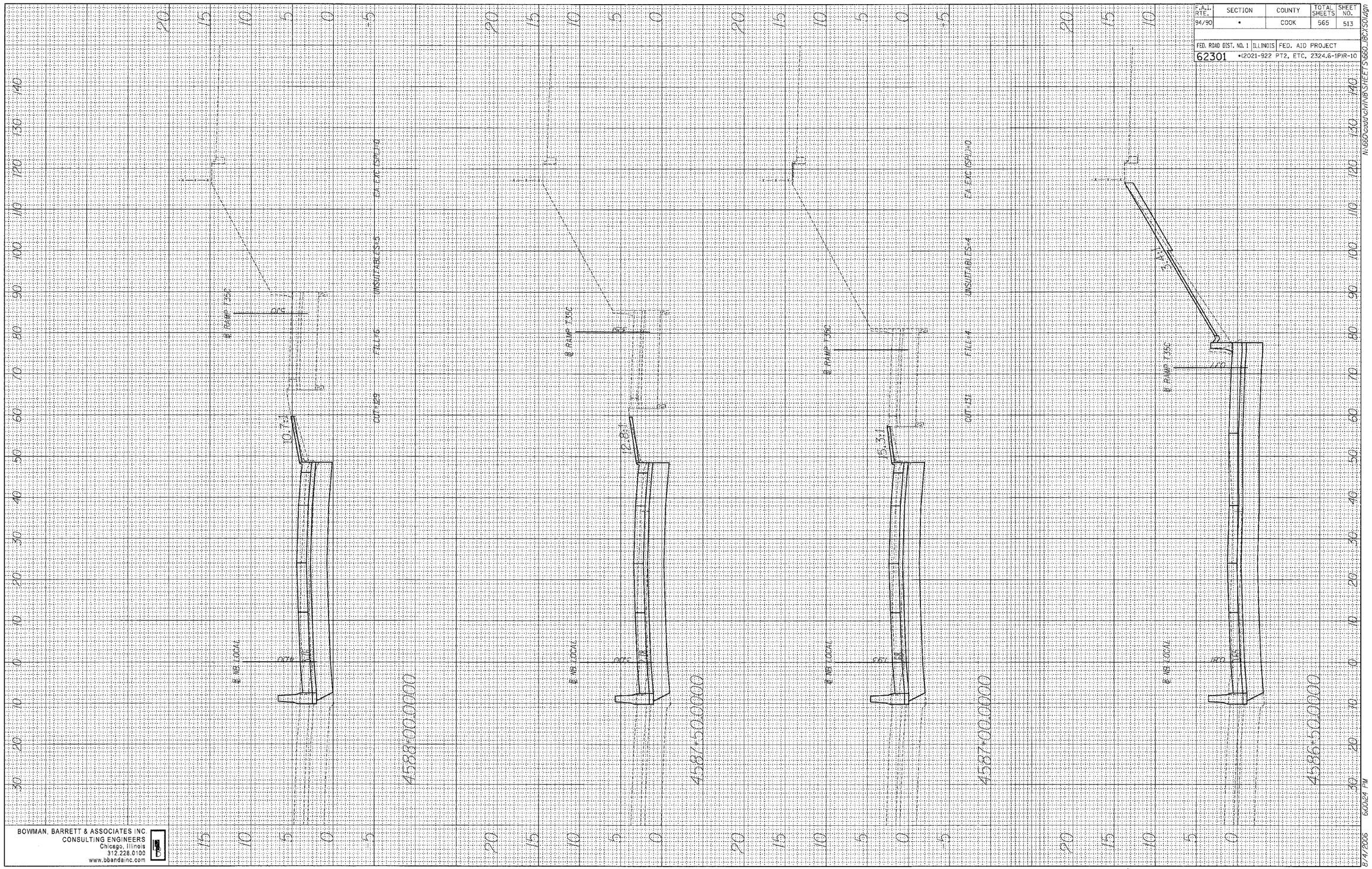

F.A.I. RTE.	SECTION	COUNTY	TOTAL SHEETS	SHEET NO.
94/90	*	COOK	565	513

FED. ROAD DIST. NO. 1 | ILLINOIS | FED. AID PROJECT

62301 *(2021-922 PT2, ETC. 2324.6-1P)R-10

N:\660\cadd\civil\B\SHEETS\660_18C\SOI.dgn

FINAL SURVEY	SURVEYED	BY	DATE
	PLOTTED		
NOTE BOOK	TEMPLATE		
	AREAS		
NO.	AREAS CHECKED		

ORIGINAL SURVEY	SURVEYED	BY	DATE
	PLOTTED		
NOTE BOOK	TEMPLATE		
	AREAS		
NO.	AREAS CHECKED		

BOWMAN, BARRETT & ASSOCIATES INC
CONSULTING ENGINEERS
Chicago, Illinois
312.228.0100
www.bbandainc.com

8/4/2006 6:20:24 PM

ADDENDUM 2 8/04/06

F.A.I. RTE.	SECTION	COUNTY	TOTAL SHEETS	SHEET NO.
94/90	*	COOK	565	514

FED. ROAD DIST. NO. 1 | ILLINOIS | FED. AID PROJECT

62301 *(2021-922 PT2, ETC. 2324.6-1P)R-10

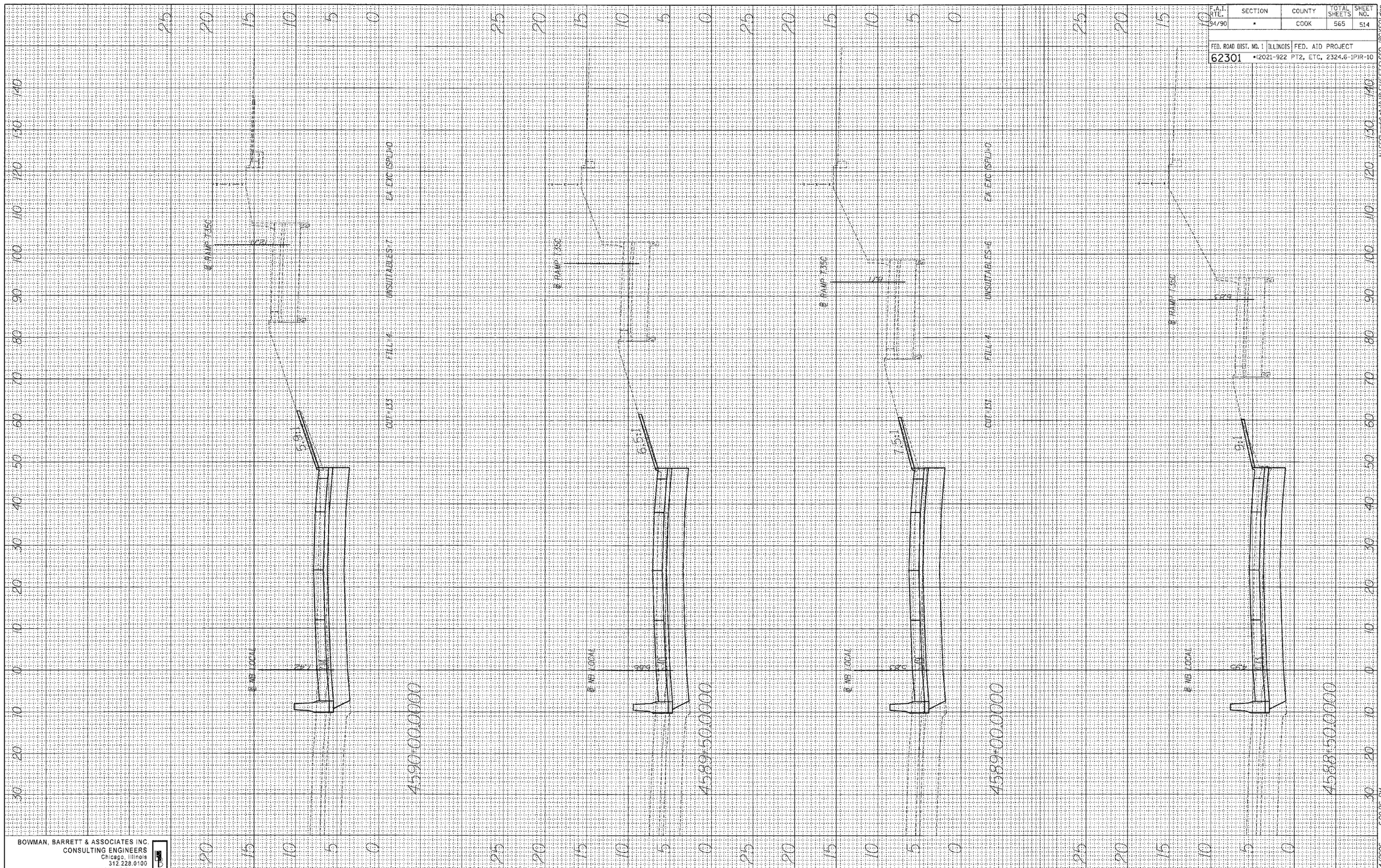

ORIGINAL SURVEY	BY	DATE
SURVEYED		
PLOTTED		
TEMPLATE		
AREAS		
AREAS CHECKED		

NOTE BOOK
NO.

FINAL SURVEY	BY	DATE
SURVEYED		
PLOTTED		
TEMPLATE		
AREAS		
AREAS CHECKED		

NOTE BOOK
NO.

BOWMAN, BARRETT & ASSOCIATES INC.
CONSULTING ENGINEERS
Chicago, Illinois
312.228.0100
www.bbandainc.com

N:\660\cadd\MINB\SHEET\S660_BCXS01.dgn

8/4/2006 6:00:26 PM

ADDENDUM 2 8/04/06

F.A.I. RTE.	SECTION	COUNTY	TOTAL SHEETS	SHEET NO.
94/90	*	COOK	565	515

FED. ROAD DIST. NO. 1 | ILLINOIS | FED. AID PROJECT

62301 *(2021-922 PT2, ETC. 2324.6-IP)R-10

FINAL SURVEY	SURVEYED	BY	DATE
	PLOTTED		
NOTE BOOK	TEMPLATE		
	AREAS		
NO.	AREAS CHECKED		

ORIGINAL SURVEY	SURVEYED	BY	DATE
	PLOTTED		
NOTE BOOK	TEMPLATE		
	AREAS		
NO.	AREAS CHECKED		

BOWMAN, BARRETT & ASSOCIATES INC.
CONSULTING ENGINEERS
Chicago, Illinois
312.228.0100
www.bbandainc.com

N:\660\cadd\CIVIL\PLSHEETS\660_18CKSO.dgn

8/4/2006 6:00:28 PM

ADDENDUM 2 8/04/06

ORIGINAL SURVEY		BY	DATE
NOTE BOOK	SURVEYED		
	PLOTTED		
	TEMPLATE		
	AREAS		
NO.	AREAS CHECKED		

FINAL SURVEY		BY	DATE
NOTE BOOK	SURVEYED		
	PLOTTED		
	TEMPLATE		
	AREAS		
NO.	AREAS CHECKED		

BOWMAN, BARRETT & ASSOCIATES INC
CONSULTING ENGINEERS
Chicago, Illinois
312.228.0100
www.bowmanlinc.com

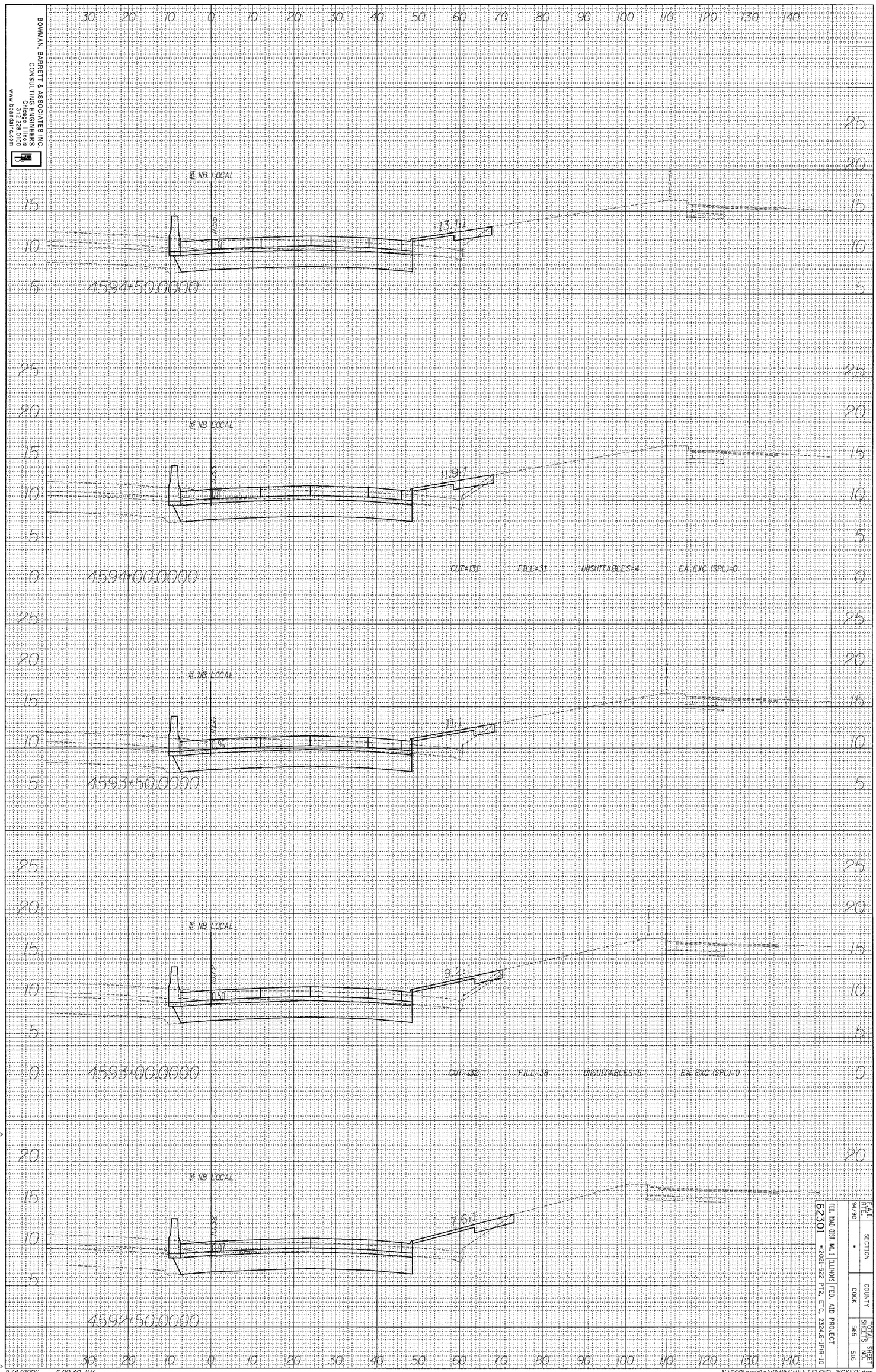

ADDENDUM 2 8/04/06

FAI RTE.	SECTION	COUNTY	TOTAL SHEETS	SHEET NO.
94/96	*	COOK	565	516

FED. ROAD DIST. NO. 1 ILLINOIS FED. AID PROJECT

62301 *(202) 962 PTA, ETC. 4324-6-PTR-10

8/4/2006 6:00:30 PM

N:\660\cadd\CIVIN\SHEETS\660_IBCXSOI.dgn

F.A.I. RTE.	SECTION	COUNTY	TOTAL SHEETS	SHEET NO.
94/90	*	COOK	565	517

FED. ROAD DIST. NO. 1 | ILLINOIS | FED. AID PROJECT

62301 *(2021-922 PT2, ETC, 2324.6-1PJR-10

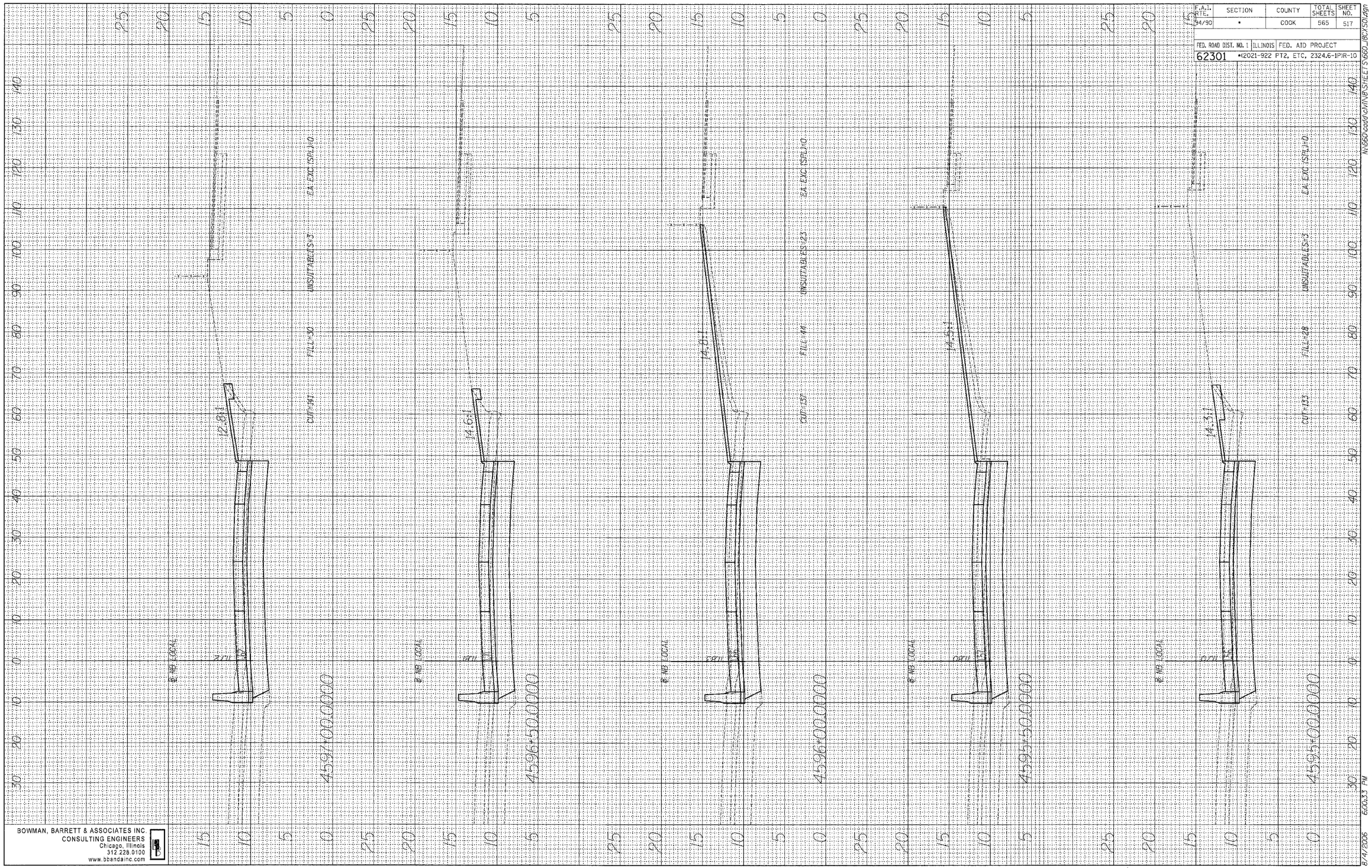

FINAL SURVEY	BY	DATE
SURVEYED		
PLOTTED		
NOTE BOOK TEMPLATE		
AREAS		
NO. AREAS CHECKED		

ORIGINAL SURVEY	BY	DATE
SURVEYED		
PLOTTED		
NOTE BOOK TEMPLATE		
AREAS		
NO. AREAS CHECKED		

BOWMAN, BARRETT & ASSOCIATES INC.
CONSULTING ENGINEERS
Chicago, Illinois
312.228.0100
www.bbandainc.com

N:\660\cadd\civil\B\SHEETS\660_I8C1S01.dgn

8/4/2006 6:06:33 PM

ADDENDUM 2 8/04/06

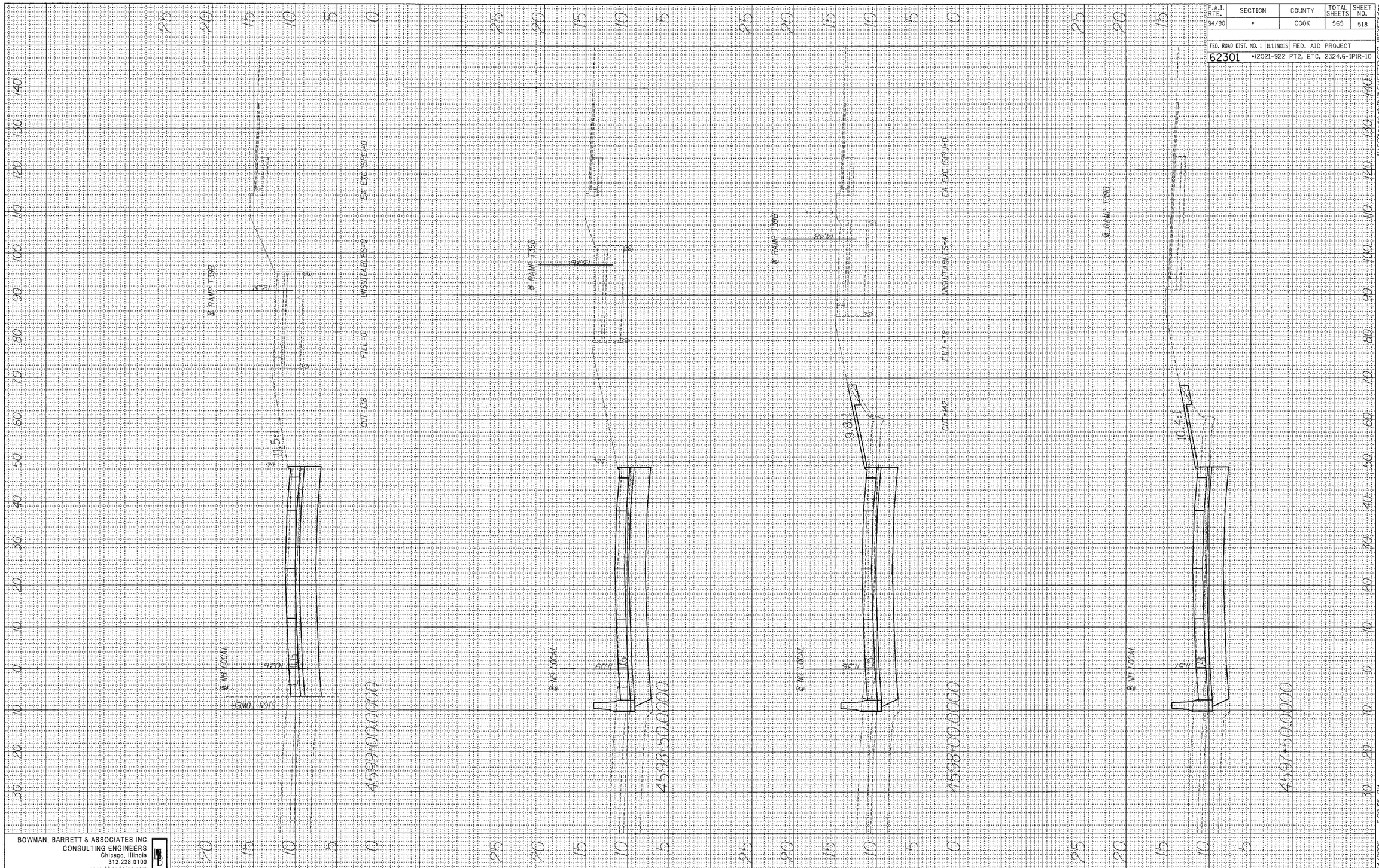

F.A.I. RTE.	SECTION	COUNTY	TOTAL SHEETS	SHEET NO.
94/90	*	COOK	565	518

FED. ROAD DIST. NO. 1 | ILLINOIS | FED. AID PROJECT

62301 *(2021-922 PT2, ETC. 2324.6-1PJR-10

N:\660\cadd\civil\B\SHEETS\660_18CYSD.dgn

ORIGINAL SURVEY	BY	DATE
SURVEYED		
PLOTTED		
NOTE BOOK TEMPLATE		
AREAS		
NO. AREAS CHECKED		

FINAL SURVEY	BY	DATE
SURVEYED		
PLOTTED		
NOTE BOOK TEMPLATE		
AREAS		
NO. AREAS CHECKED		

BOWMAN, BARRETT & ASSOCIATES INC
CONSULTING ENGINEERS
Chicago, Illinois
312.228.0100
www.bbandainc.com

8/4/2006 6:00:35 PM

2 ADDENDUM 2 8/04/06 2

F.A.I. RTE.	SECTION	COUNTY	TOTAL SHEETS	SHEET NO.
94/90	*	COOK	565	519

FED. ROAD DIST. NO. 1 | ILLINOIS | FED. AID PROJECT

62301 *(2021-922 PT2, ETC. 2324.6-1P)R-10

FINAL SURVEY	BY	DATE
SURVEYED		
PLOTTED		
NOTE BOOK TEMPLATE		
AREAS		
NO. AREAS CHECKED		

ORIGINAL SURVEY	BY	DATE
SURVEYED		
PLOTTED		
NOTE BOOK TEMPLATE		
AREAS		
NO. AREAS CHECKED		

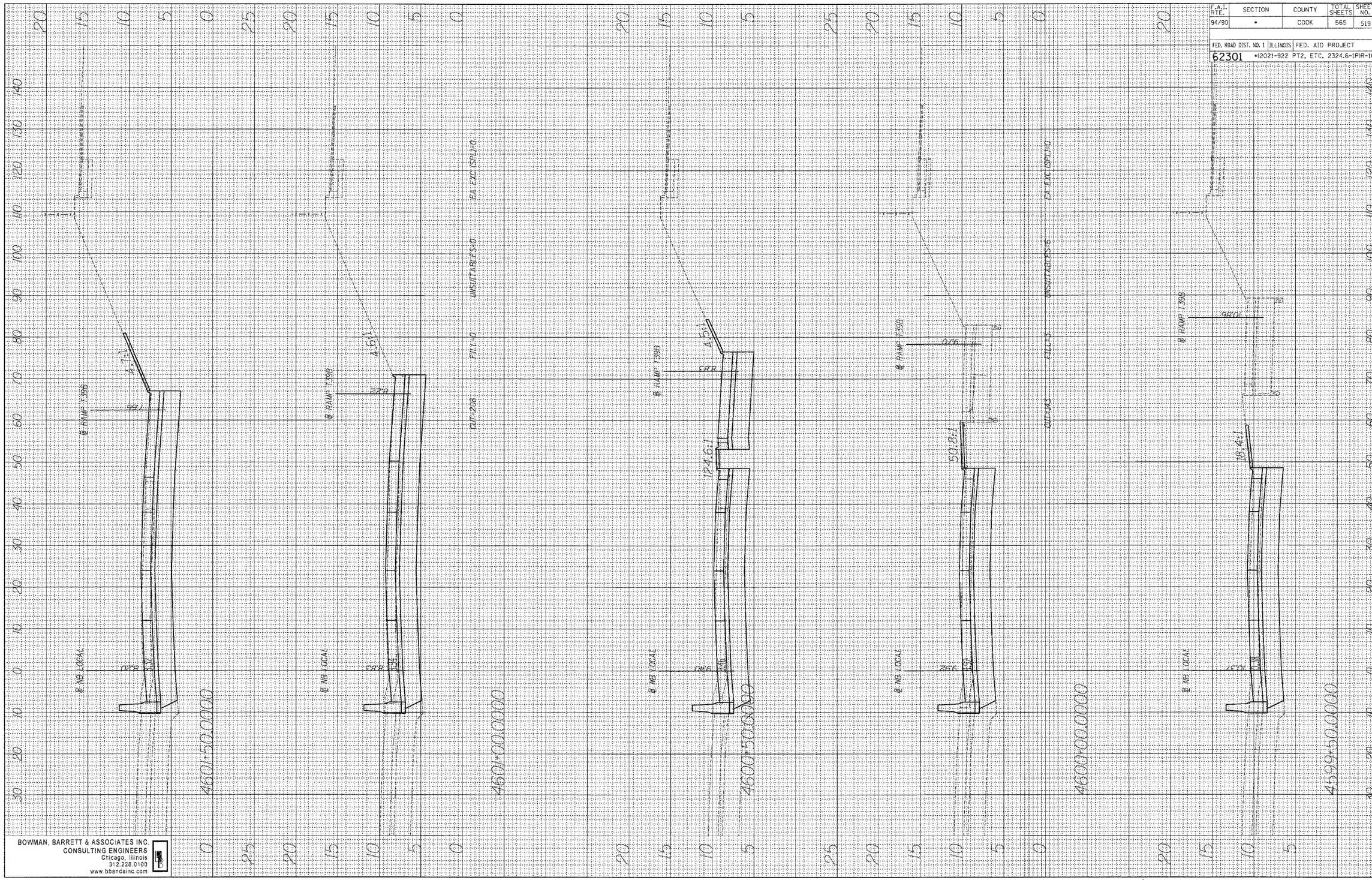

BOWMAN, BARRETT & ASSOCIATES INC.
CONSULTING ENGINEERS
Chicago, Illinois
312.228.0100
www.bbandainc.com

2 ADDENDUM 2 8/04/06

8/4/2006 6:05:31 PM

N:\660\cadd\civil\BSHEETS\660_18CXSO1.dgn

ORIGINAL SURVEY		BY	DATE
NOTE BOOK	SURVEYED		
	PLOTTED		
	TEMPLATE		
	AREAS		
NO.	AREAS CHECKED		

FINAL SURVEY		BY	DATE
NOTE BOOK	SURVEYED		
	PLOTTED		
	TEMPLATE		
	AREAS		
NO.	AREAS CHECKED		

BOWMAN, BARRETT & ASSOCIATES, INC.
CONSULTING ENGINEERS
Chicago, Illinois
(773) 777-0000
(773) 777-0010
www.bbaraetc.com

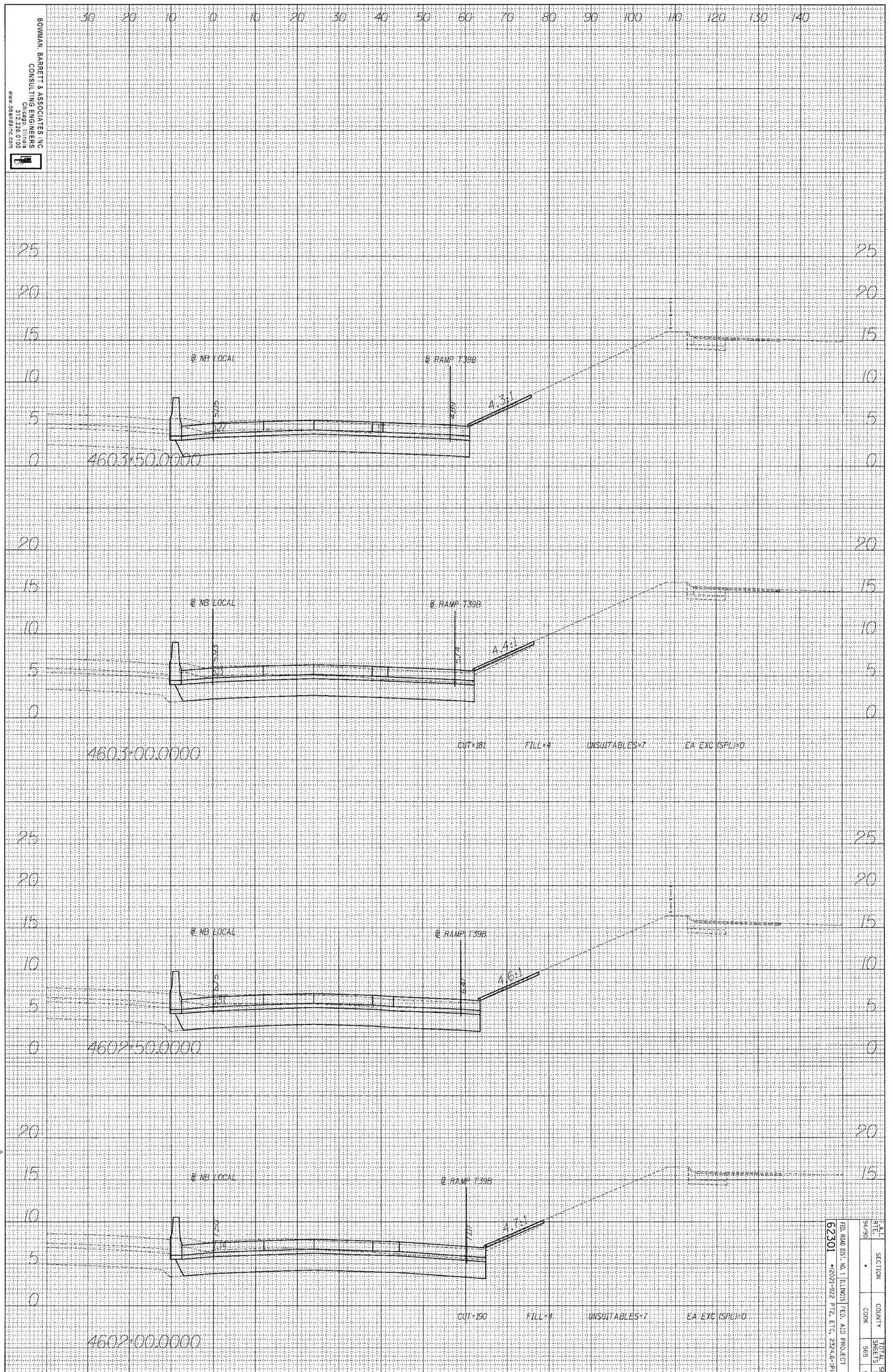

ADDENDUM 2 8/04/06

FED. ROAD DIST. NO. 1	ILLINOIS	FED. AID PROJECT					
62301	*(2021-322 PT2, ETC. 2324-6-1PR-10	COUNTY		TOTAL SHEETS	SHEET NO.		
		COOK	SECTION	565	520		

8/4/2006 6:00:39 PM

N:\660\cadd\civil\8\SHEETS\660_18CX501.dgn

F.A.I. RTE.	SECTION	COUNTY	TOTAL SHEETS	SHEET NO.
94/90	*	COOK	565	521

FED. ROAD DIST. NO. 1 | ILLINOIS | FED. AID PROJECT

62301 *(2021-922 PT2, ETC. 2324.6-1P)R-10

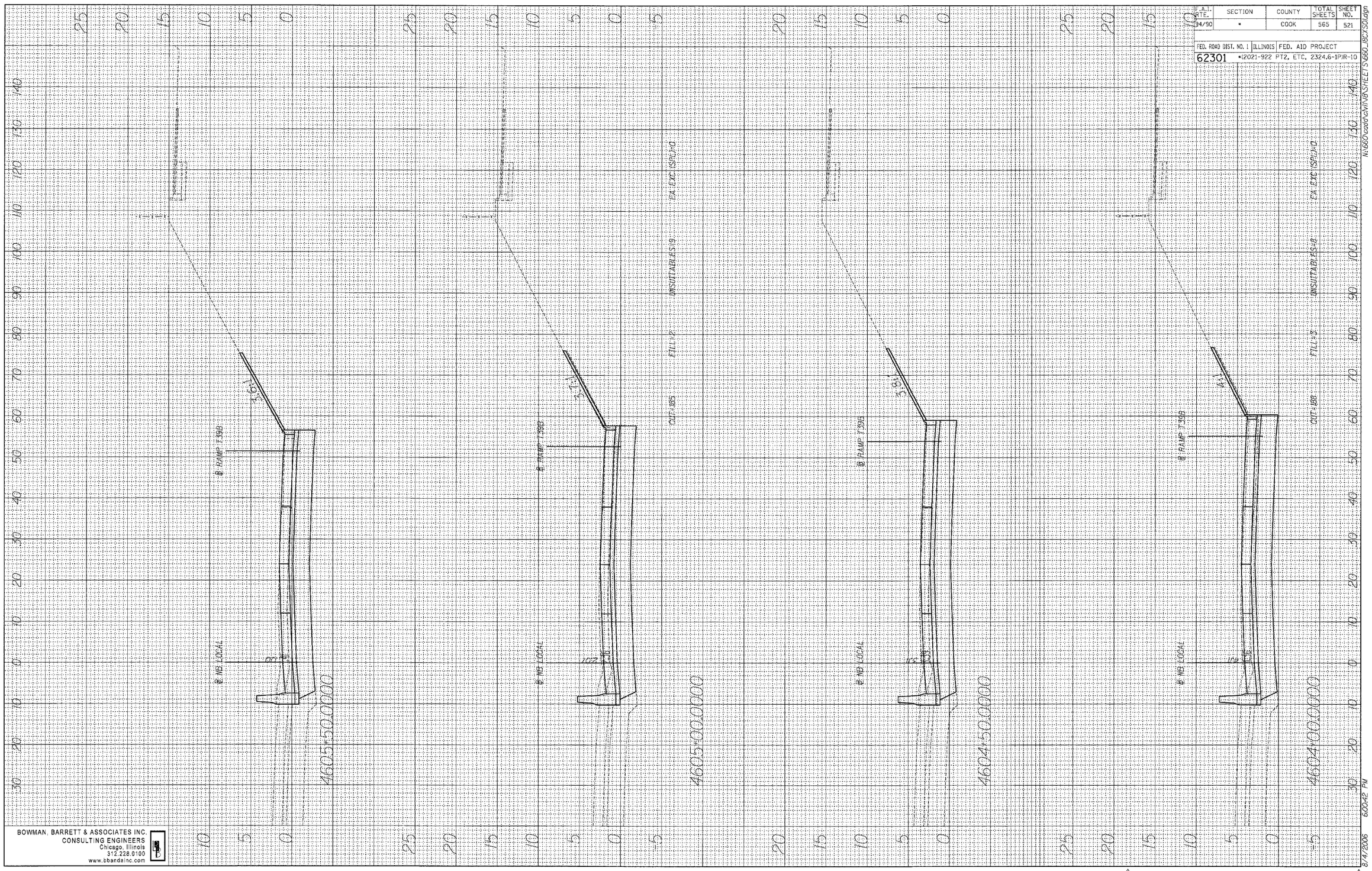

FINAL SURVEY	BY	DATE
SURVEYED		
PLOTTED		
NOTE BOOK TEMPLATE		
AREAS		
NO. AREAS CHECKED		

ORIGINAL SURVEY	BY	DATE
SURVEYED		
PLOTTED		
NOTE BOOK TEMPLATE		
AREAS		
NO. AREAS CHECKED		

BOWMAN, BARRETT & ASSOCIATES INC.
CONSULTING ENGINEERS
Chicago, Illinois
312.228.0100
www.bbandainc.com

N:\660\cadd\civil\B\SHEETS\660_IBCYS01.dgn

8/4/2006 6:00:42 PM

△2 ADDENDUM 2 8/04/06 △2

F.A.I. RTE.	SECTION	COUNTY	TOTAL SHEETS	SHEET NO.
94/90	*	COOK	565	522

FED. ROAD DIST. NO. 1 | ILLINOIS | FED. AID PROJECT

62301 *(2021-922 PT2, ETC. 2324.6-1P)R-10

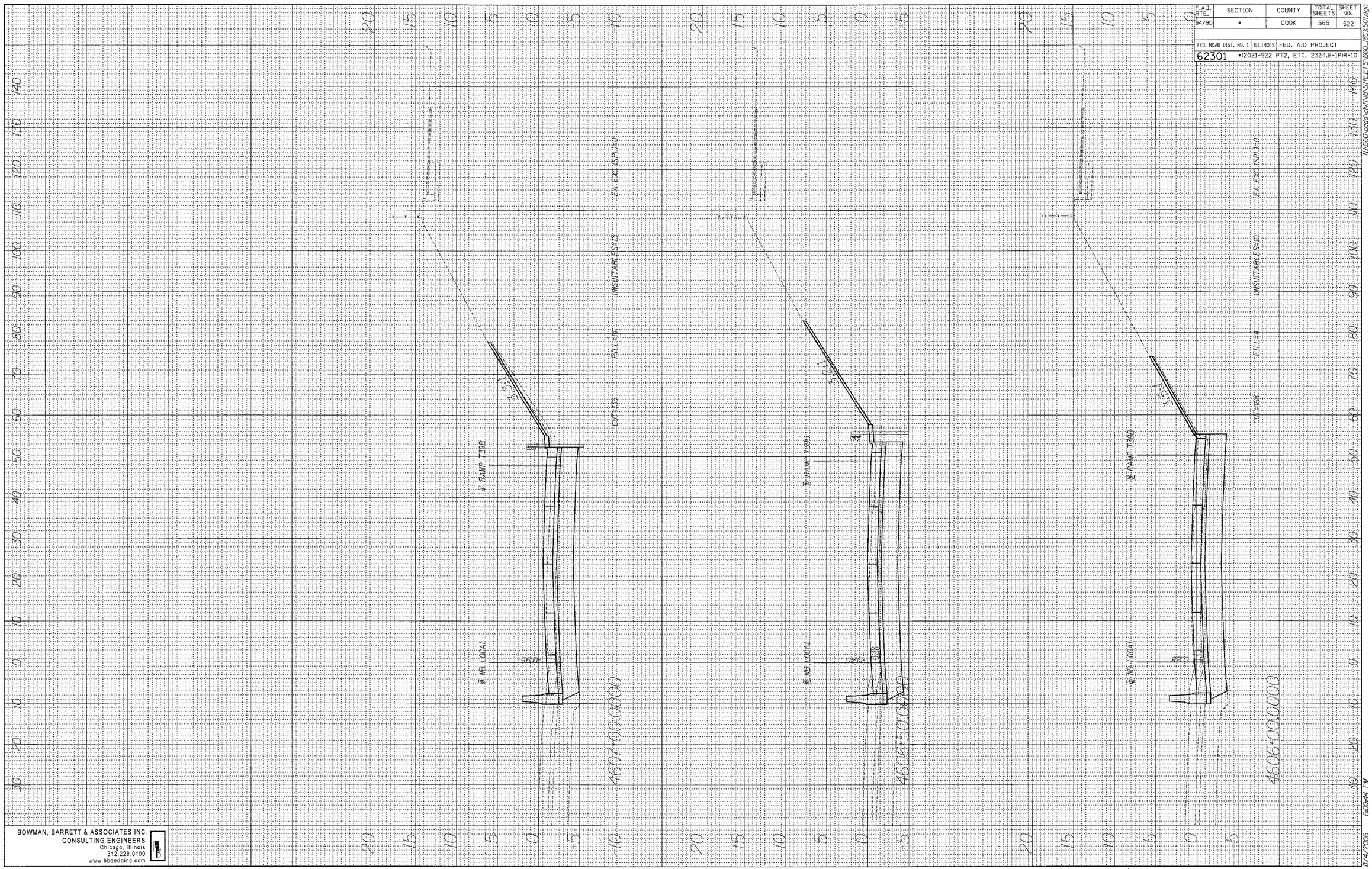

FINAL SURVEY	BY	DATE
SURVEYED		
PLOTTED		
NOTE BOOK TEMPLATE		
AREAS		
NO. AREAS CHECKED		

ORIGINAL SURVEY	BY	DATE
SURVEYED		
PLOTTED		
NOTE BOOK TEMPLATE		
AREAS		
NO. AREAS CHECKED		

BOWMAN, BARRETT & ASSOCIATES INC
CONSULTING ENGINEERS
Chicago, Illinois
312.228.0100
www.bbandainc.com

N:\660\cadd\civil\BS\SHEETS\660_RCXS01.dgn

8/4/2006 6:00:44 PM

ADDENDUM 2 8/04/06

F.A.I. RTE.	SECTION	COUNTY	TOTAL SHEETS	SHEET NO.
94/90	*	COOK	565	523

FED. ROAD DIST. NO. 1 | ILLINOIS | FED. AID PROJECT

62301 *(2021-922 PT2, ETC. 2324.6-1P)R-10

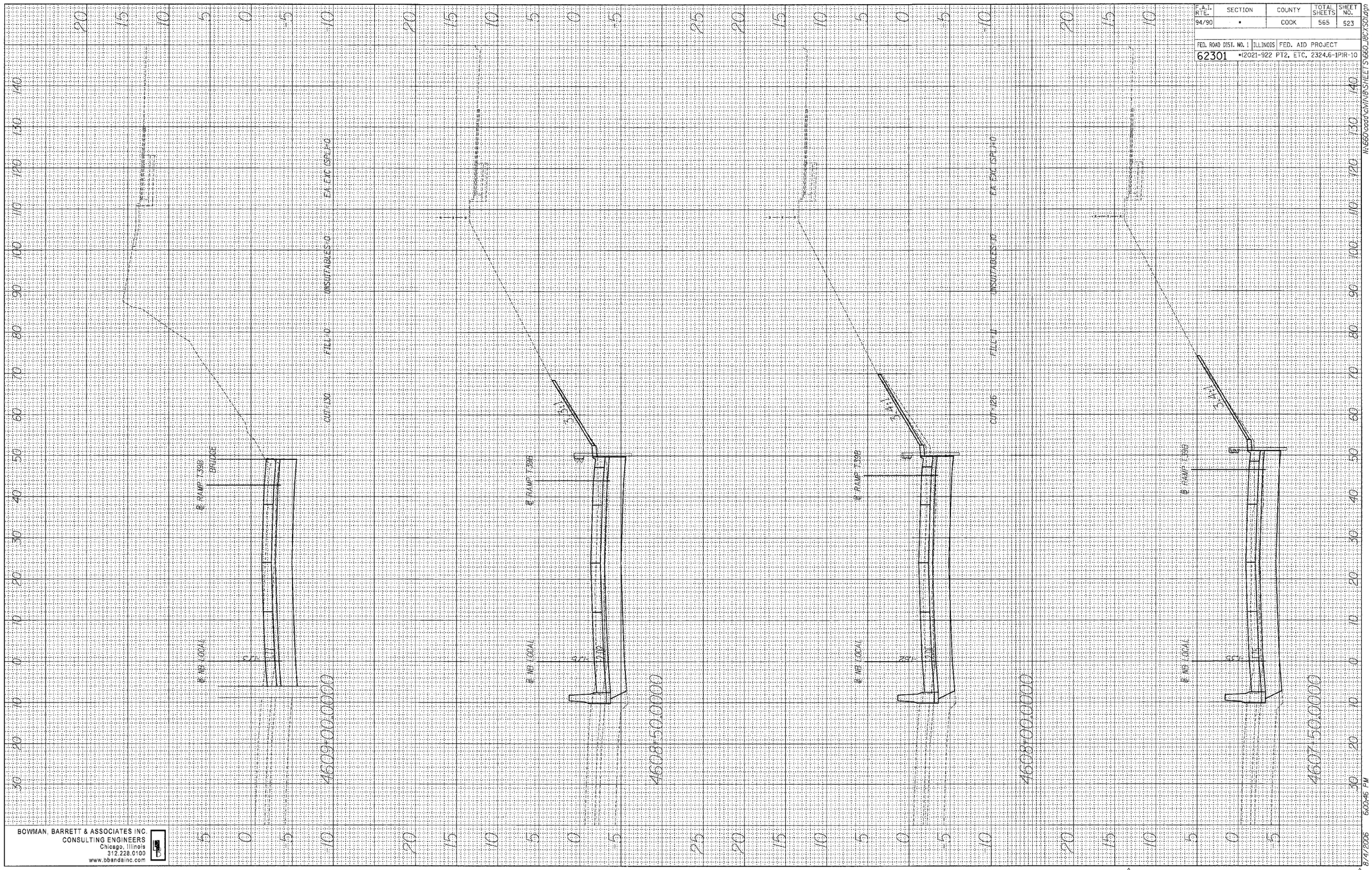

FINAL SURVEY	BY	DATE
SURVEYED		
PLOTTED		
TEMPLATE		
AREAS		
AREAS CHECKED		
NOTE BOOK NO.		

ORIGINAL SURVEY	BY	DATE
SURVEYED		
PLOTTED		
TEMPLATE		
AREAS		
AREAS CHECKED		
NOTE BOOK NO.		

BOWMAN, BARRETT & ASSOCIATES INC.
CONSULTING ENGINEERS
Chicago, Illinois
312.228.0100
www.bbandainc.com

N:\660cadd\cMVB\SHEETS\660_BCXS01.dgn

8/4/2006 6:00:46 PM

2 ADDENDUM 2 8/04/06 2

F.A.I. RTE.	SECTION	COUNTY	TOTAL SHEETS	SHEET NO.
94/90	*	COOK	565	524

FED. ROAD DIST. NO. 1 | ILLINOIS | FED. AID PROJECT

62301 *(2021-922 PT2, ETC. Z324.6-1P)R-10

FINAL SURVEY		BY	DATE
NOTE BOOK	SURVEYED		
	PLOTTED		
	TEMPLATE		
	AREAS		
NO.	AREAS CHECKED		

ORIGINAL SURVEY		BY	DATE
NOTE BOOK	SURVEYED		
	PLOTTED		
	TEMPLATE		
	AREAS		
NO.	AREAS CHECKED		

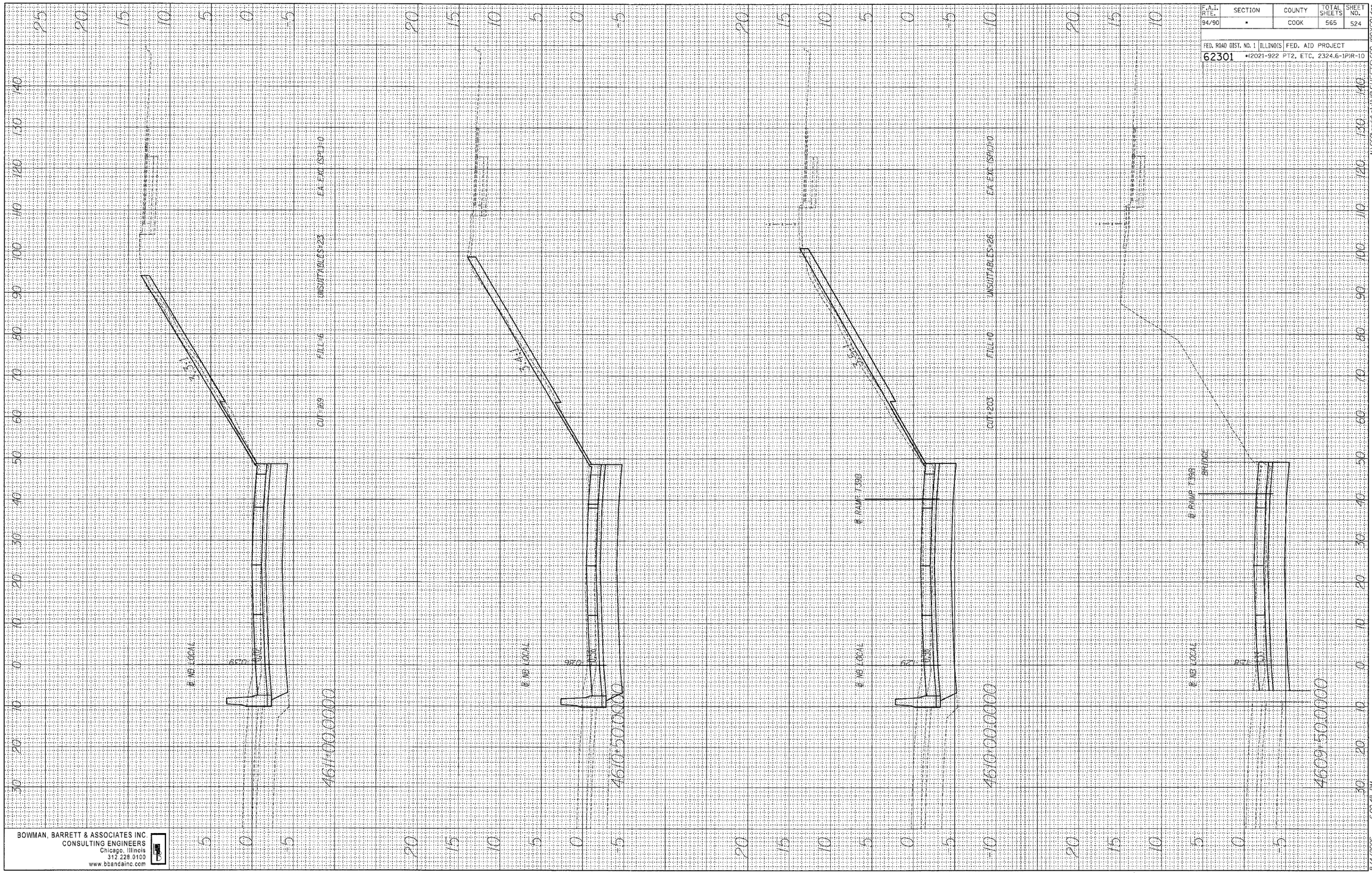

BOWMAN, BARRETT & ASSOCIATES INC.
CONSULTING ENGINEERS
Chicago, Illinois
312.228.0100
www.bbandainc.com

N:\660\cadd\civil\BS\SHEETS\660_18CXS01.dgn

8/4/2006 6:00:48 PM

2 ADDENDUM 2 8/04/06 2

F.A.I. RTE.	SECTION	COUNTY	TOTAL SHEETS	SHEET NO.
94/90	*	COOK	565	525

FED. ROAD DIST. NO. 1 | ILLINOIS | FED. AID PROJECT

62301 *(2021-922 PT2, ETC, 2324.6-1P)R-10

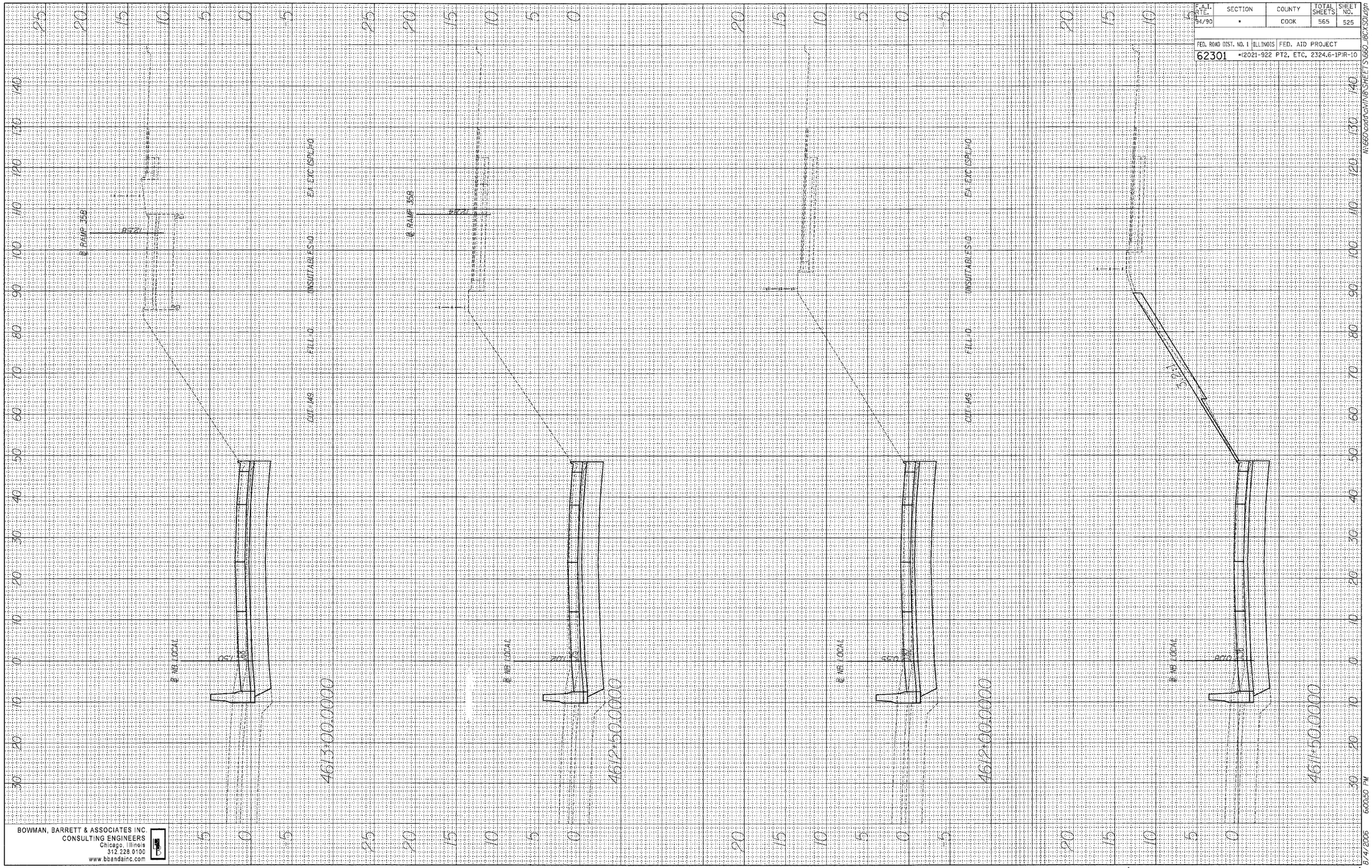

FINAL SURVEY	BY	DATE
SURVEYED		
PLOTTED		
TEMPLATE		
AREAS		
AREAS CHECKED		
NOTE BOOK NO.		

ORIGINAL SURVEY	BY	DATE
SURVEYED		
PLOTTED		
TEMPLATE		
AREAS		
AREAS CHECKED		
NOTE BOOK NO.		

BOWMAN, BARRETT & ASSOCIATES INC.
CONSULTING ENGINEERS
Chicago, Illinois
312.228.0100
www.bbandainc.com

△2 ADDENDUM 2 8/04/06 △2

8/4/2006 6:00:50 PM

N:\660\odot\CIVIL\SHEETS\660_JACKSO1.dgn

F.A.I. RTE.	SECTION	COUNTY	TOTAL SHEETS	SHEET NO.
94/90	*	COOK	565	526

FED. ROAD DIST. NO. 1 | ILLINOIS | FED. AID PROJECT

62301 *(2021-922 PT2, ETC. 2324.6-1P1R-10

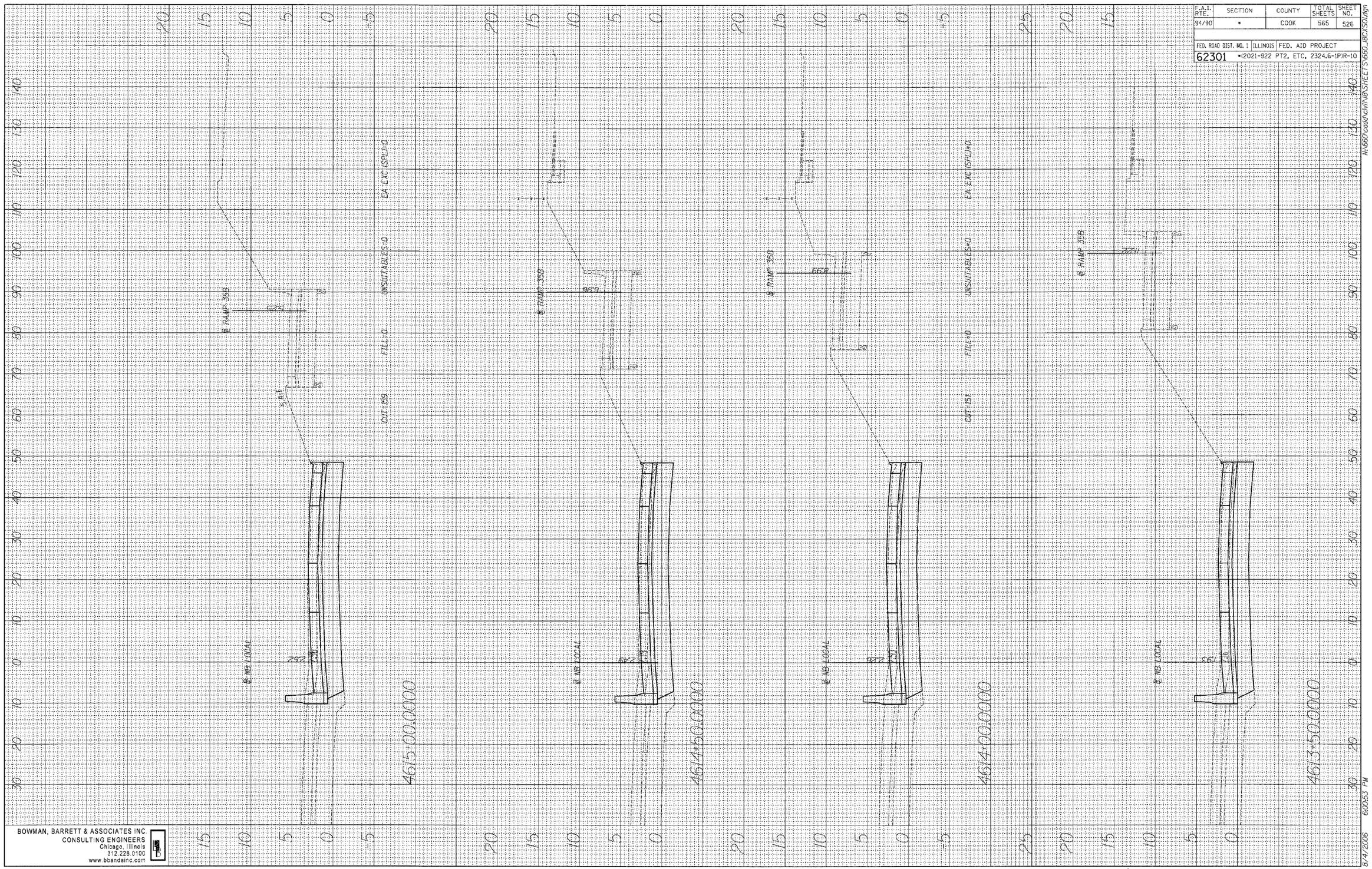

BOWMAN, BARRETT & ASSOCIATES INC.
CONSULTING ENGINEERS
Chicago, Illinois
312.226.0100
www.bbandainc.com

ORIGINAL SURVEY	SURVEYED	BY	DATE
	PLOTTED		
NOTE BOOK	TEMPLATE		
	AREAS		
NO.	AREAS CHECKED		

FINAL SURVEY	SURVEYED	BY	DATE
	PLOTTED		
NOTE BOOK	TEMPLATE		
	AREAS		
NO.	AREAS CHECKED		

N:\660\000\DWN\BSHEETS\660_BCKXS01.dgn

8/4/2006 6:00:53 PM

△2 ADDENDUM 2 8/04/06

F.A.I. RTE.	SECTION	COUNTY	TOTAL SHEETS	SHEET NO.
94/90	*	COOK	565	527

FED. ROAD DIST. NO. 1 | ILLINOIS | FED. AID PROJECT

62301 *(2021-922 PT2, ETC. 2324.6-1P)R-10

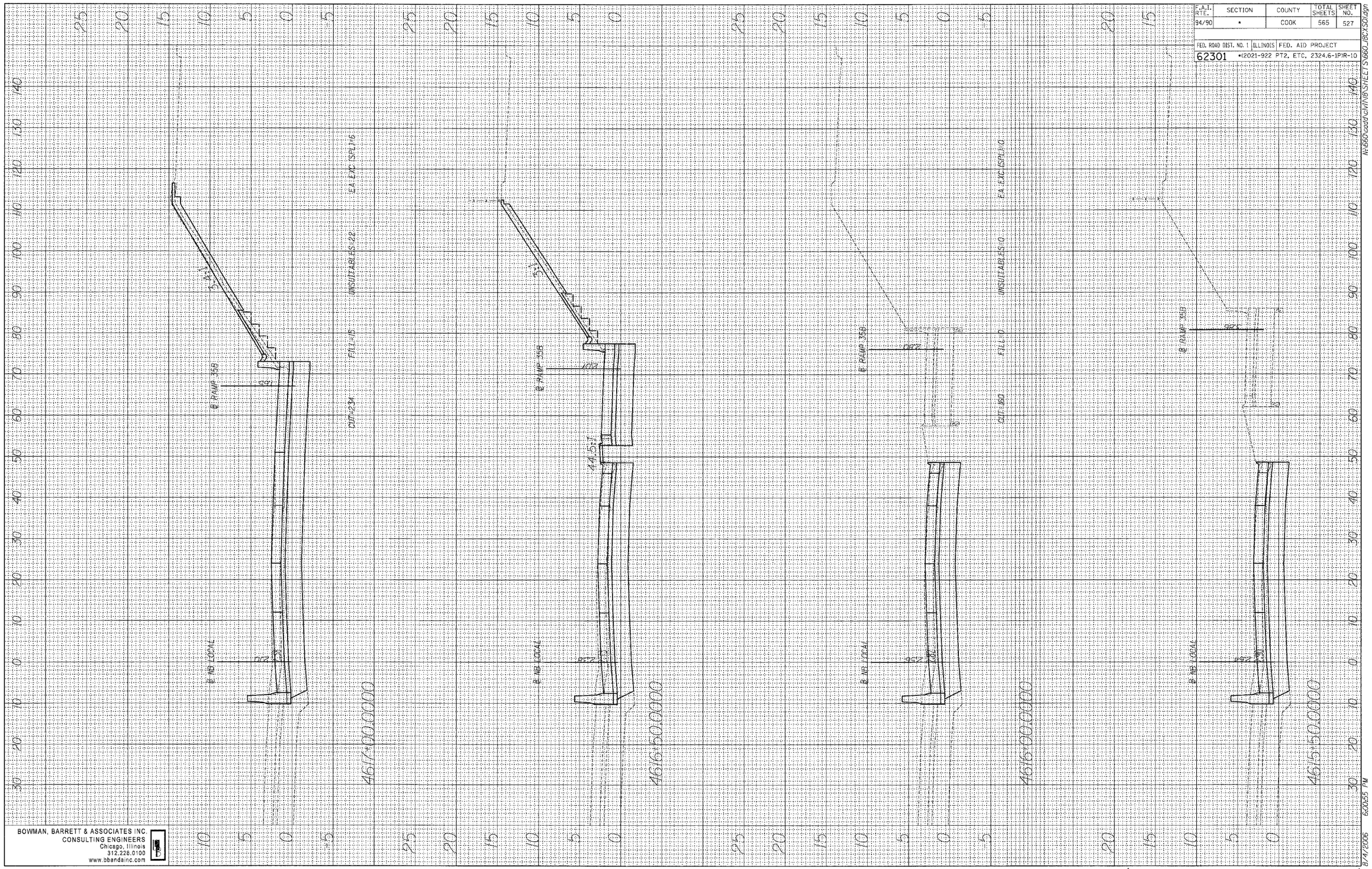

FINAL SURVEY	BY	DATE
SURVEYED		
PLOTTED		
NOTE BOOK TEMPLATE		
AREAS		
NO. AREAS CHECKED		

ORIGINAL SURVEY	BY	DATE
SURVEYED		
PLOTTED		
NOTE BOOK TEMPLATE		
AREAS		
NO. AREAS CHECKED		

BOWMAN, BARRETT & ASSOCIATES INC.
CONSULTING ENGINEERS
Chicago, Illinois
312.228.0100
www.bbandainc.com

ADDENDUM 2 8/04/06

N:\660\cadd\civil\B\SHEETS\660_B6CXS01.dgn

8/4/2006 PM 5:50:09

ORIGINAL SURVEY		BY	DATE
NOTE BOOK NO.	SURVEYED		
	PLOTTED		
	TEMPLATE		
	AREAS		
	AREAS CHECKED		

FINAL SURVEY		BY	DATE
NOTE BOOK NO.	SURVEYED		
	PLOTTED		
	TEMPLATE		
	AREAS		
	AREAS CHECKED		

BOWMAN, BARRETT & ASSOCIATES INC
CONSULTING ENGINEERS
Chicago, Illinois
(312) 782-8700
www.bbarettinc.com

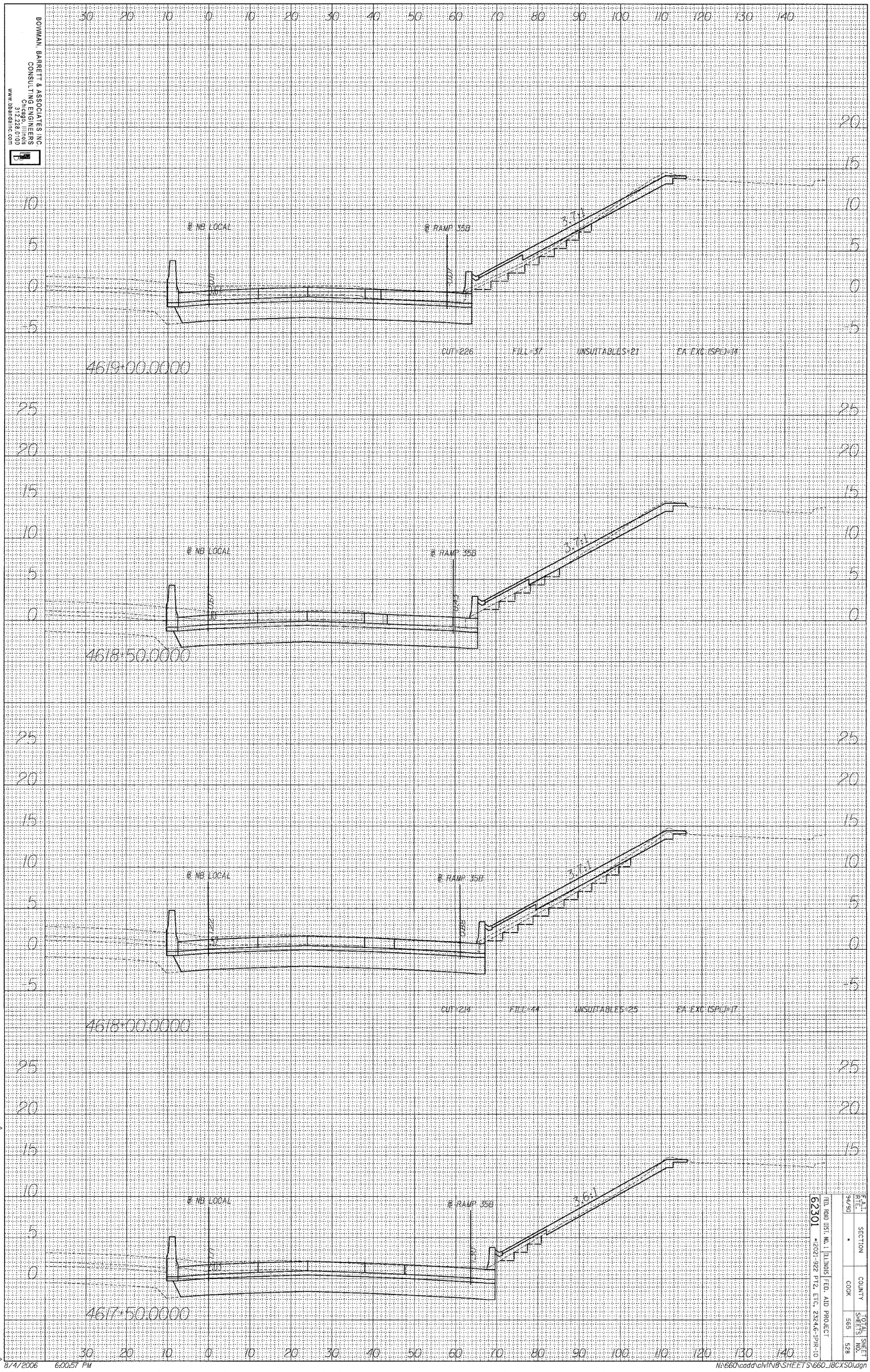

FAI-RTE.	SECTION	COUNTY	TOTAL SHEETS	SHEET NO.
54/90	*	COOK	565	528

TED. ROUD DIST. NO. 1 | ILLINOIS | FED. AID PROJECT

62301 *(2021-392 PT2, ETC. 2524.6-1PR-10

ADDENDUM 2 8/04/06

8/4/2006 6:00:57 PM

N:\660\cadd\civil\B\SHEETS\660_I80CX501.dgn

F.A.I. RTE.	SECTION	COUNTY	TOTAL SHEETS	SHEET NO.
94/90	•	COOK	565	529

FED. ROAD DIST. NO. 1 | ILLINOIS | FED. AID PROJECT

62301 •(2021-922 PT2, ETC. 2324.6-1P)R-10

N:\660\cadd\civil\SHEETS\660_PGC1SOI.dgn

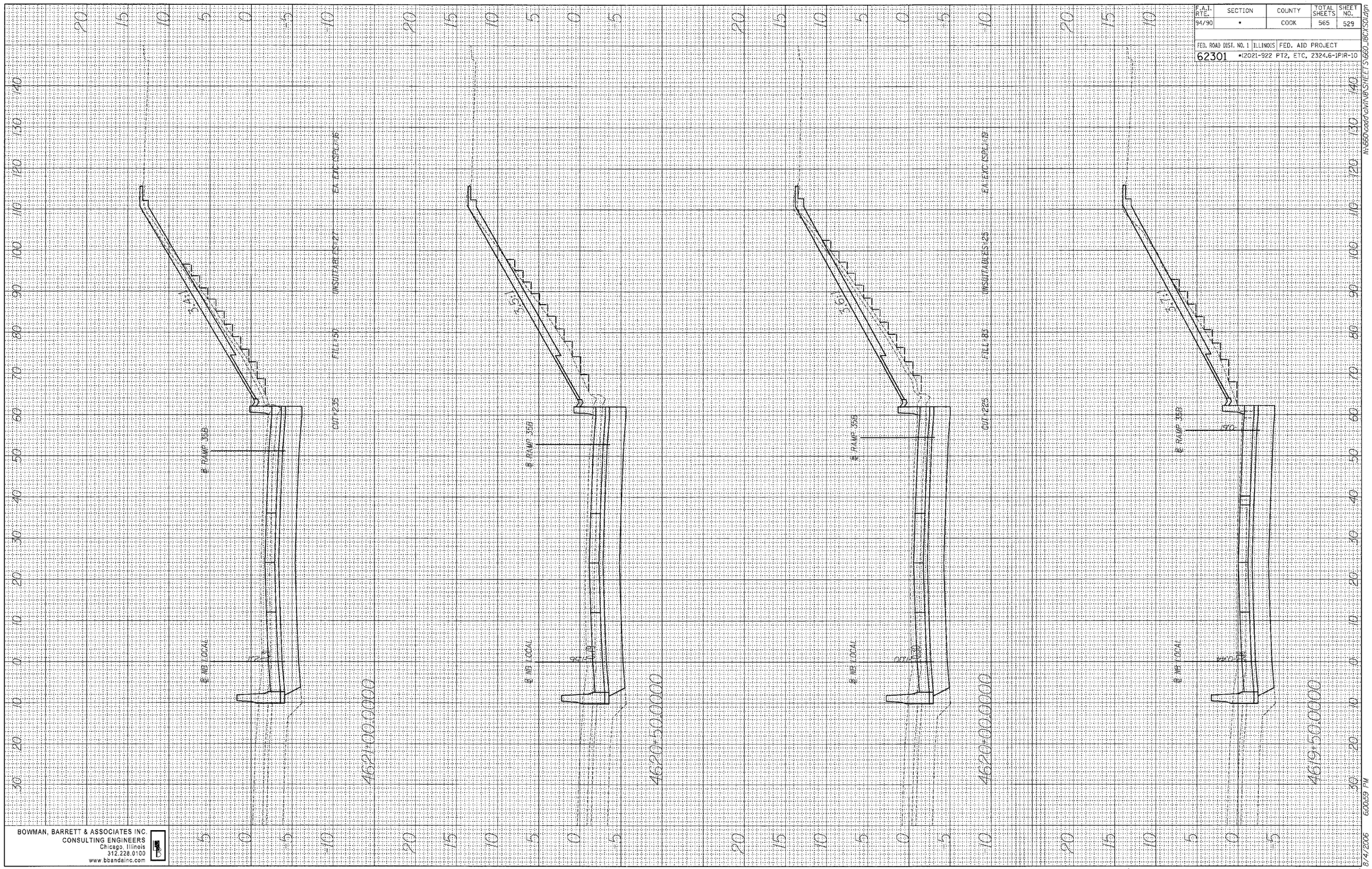

FINAL SURVEY	BY	DATE
SURVEYED		
PLOTTED		
NOTE BOOK TEMPLATE		
AREAS		
AREAS CHECKED		
NO.		

ORIGINAL SURVEY	BY	DATE
SURVEYED		
PLOTTED		
NOTE BOOK TEMPLATE		
AREAS		
AREAS CHECKED		
NO.		

BOWMAN, BARRETT & ASSOCIATES INC.
CONSULTING ENGINEERS
Chicago, Illinois
312.228.0100
www.bbandainc.com

8/4/2006 6:00:59 PM

ADDENDUM 2 8/04/06

F.A.I. RTE.	SECTION	COUNTY	TOTAL SHEETS	SHEET NO.
94/90	*	COOK	565	530

FED. ROAD DIST. NO. 1 | ILLINOIS | FED. AID PROJECT

62301 *(2021-922 PT2, ETC, 2324.6-1PJR-10

N:\660cadd\CMIN\SHEETS\660_IBCXSD.dgn

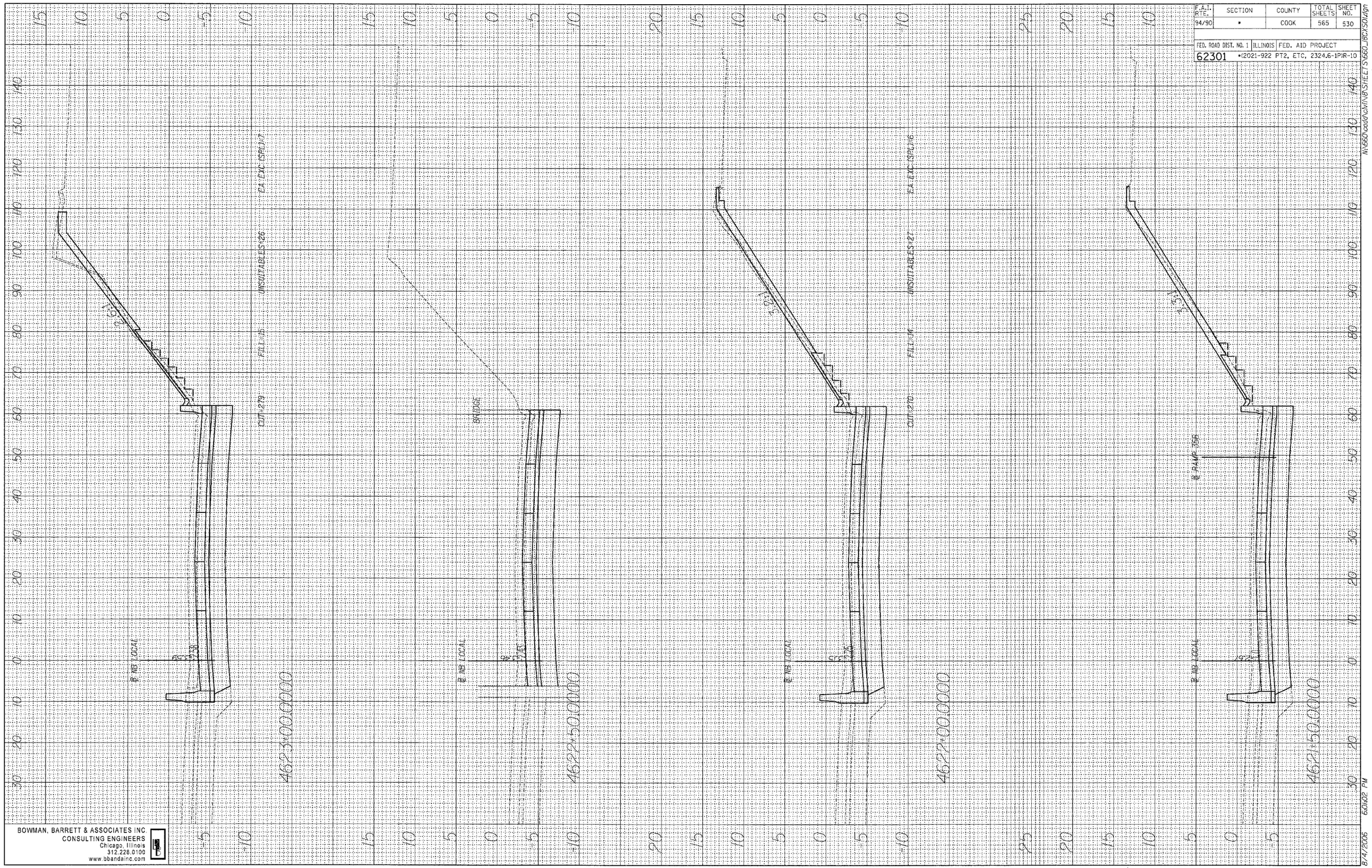

FINAL SURVEY	BY	DATE
SURVEYED		
PLOTTED		
NOTE BOOK TEMPLATE		
AREAS		
NO. AREAS CHECKED		

ORIGINAL SURVEY	BY	DATE
SURVEYED		
PLOTTED		
NOTE BOOK TEMPLATE		
AREAS		
NO. AREAS CHECKED		

BOWMAN, BARRETT & ASSOCIATES INC
CONSULTING ENGINEERS
Chicago, Illinois
312.228.0100
www.bbandainc.com

8/14/2006 9:09:02 PM

2 ADDENDUM 2 8/04/06

F.A.I. RTE.	SECTION	COUNTY	TOTAL SHEETS	SHEET NO.
94/90	*	COOK	565	531

FED. ROAD DIST. NO. 1 | ILLINOIS | FED. AID PROJECT

62301 *(2021-922 PT2, ETC. 2324.6-1P)R-10

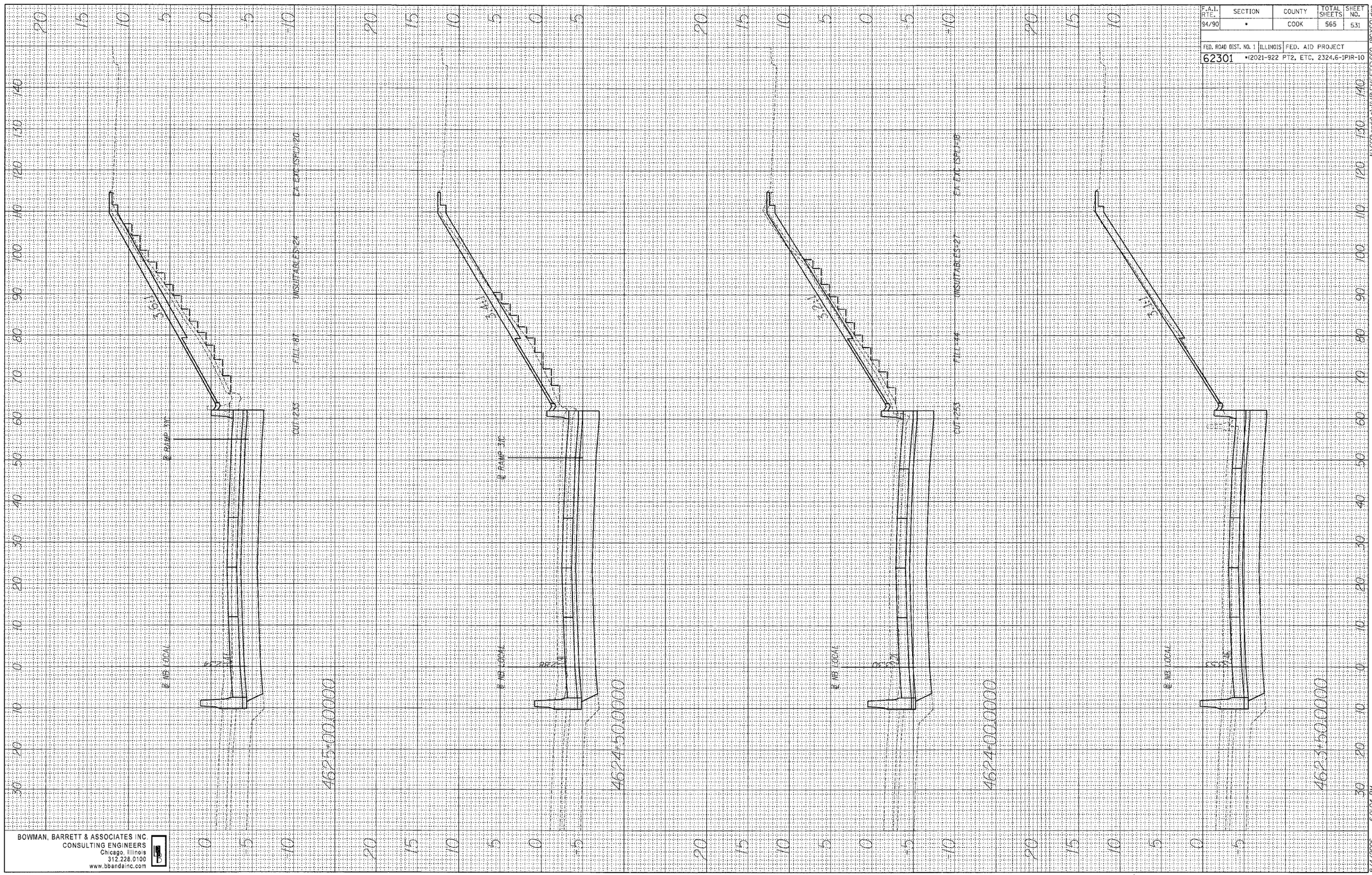

FINAL SURVEY	BY	DATE
SURVEYED		
PLOTTED		
NOTE BOOK TEMPLATE		
AREAS		
NO. AREAS CHECKED		

ORIGINAL SURVEY	BY	DATE
SURVEYED		
PLOTTED		
NOTE BOOK TEMPLATE		
AREAS		
NO. AREAS CHECKED		

BOWMAN, BARRETT & ASSOCIATES INC.
CONSULTING ENGINEERS
Chicago, Illinois
312.228.0100
www.bbandainc.com

N:\660\cadd\CMNB\SHEETS\660_18CXSO1.dgn

8/11/2006 3:10:04 PM

△2 ADDENDUM 2 8/04/06

F.A.I. RTE.	SECTION	COUNTY	TOTAL SHEETS	SHEET NO.
94/90	*	COOK	565	532

FED. ROAD DIST. NO. 1 | ILLINOIS | FED. AID PROJECT

62301 *(2021-922 PT2, ETC. 2324.6-1P)R-10

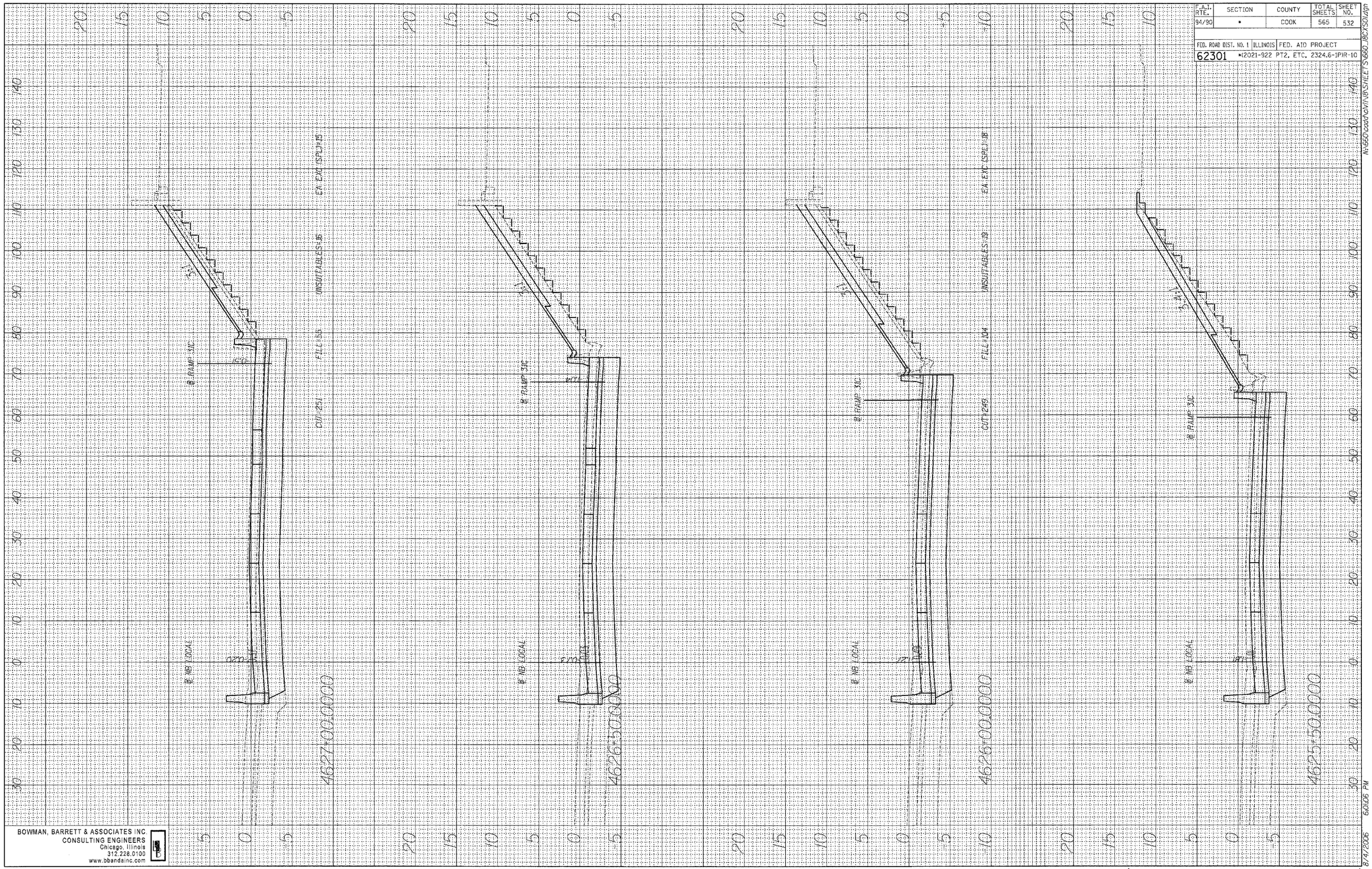

FINAL SURVEY	BY	DATE
SURVEYED		
PLOTTED		
NOTE BOOK TEMPLATE		
AREAS		
NO. AREAS CHECKED		

ORIGINAL SURVEY	BY	DATE
SURVEYED		
PLOTTED		
NOTE BOOK TEMPLATE		
AREAS		
NO. AREAS CHECKED		

BOWMAN, BARRETT & ASSOCIATES INC
CONSULTING ENGINEERS
Chicago, Illinois
312.228.0100
www.bbandainc.com

N:\660\cadd\civil\BSHEET\660_JBCYS01.dgn

8/4/2006 6:01:05 PM

2 ADDENDUM 2 8/04/06

ORIGINAL SURVEY		BY	DATE
NOTE BOOK	SURVEYED		
	PLOTTED		
	TEMPLATE		
	AREAS		
NO.	AREAS CHECKED		

FINAL SURVEY		BY	DATE
NOTE BOOK	SURVEYED		
	PLOTTED		
	TEMPLATE		
	AREAS		
NO.	AREAS CHECKED		

BOWMAN, BARRETT & ASSOCIATES INC
CONSULTING ENGINEERS
Chicago, Illinois
312.228.0100
www.bbaengrs.com

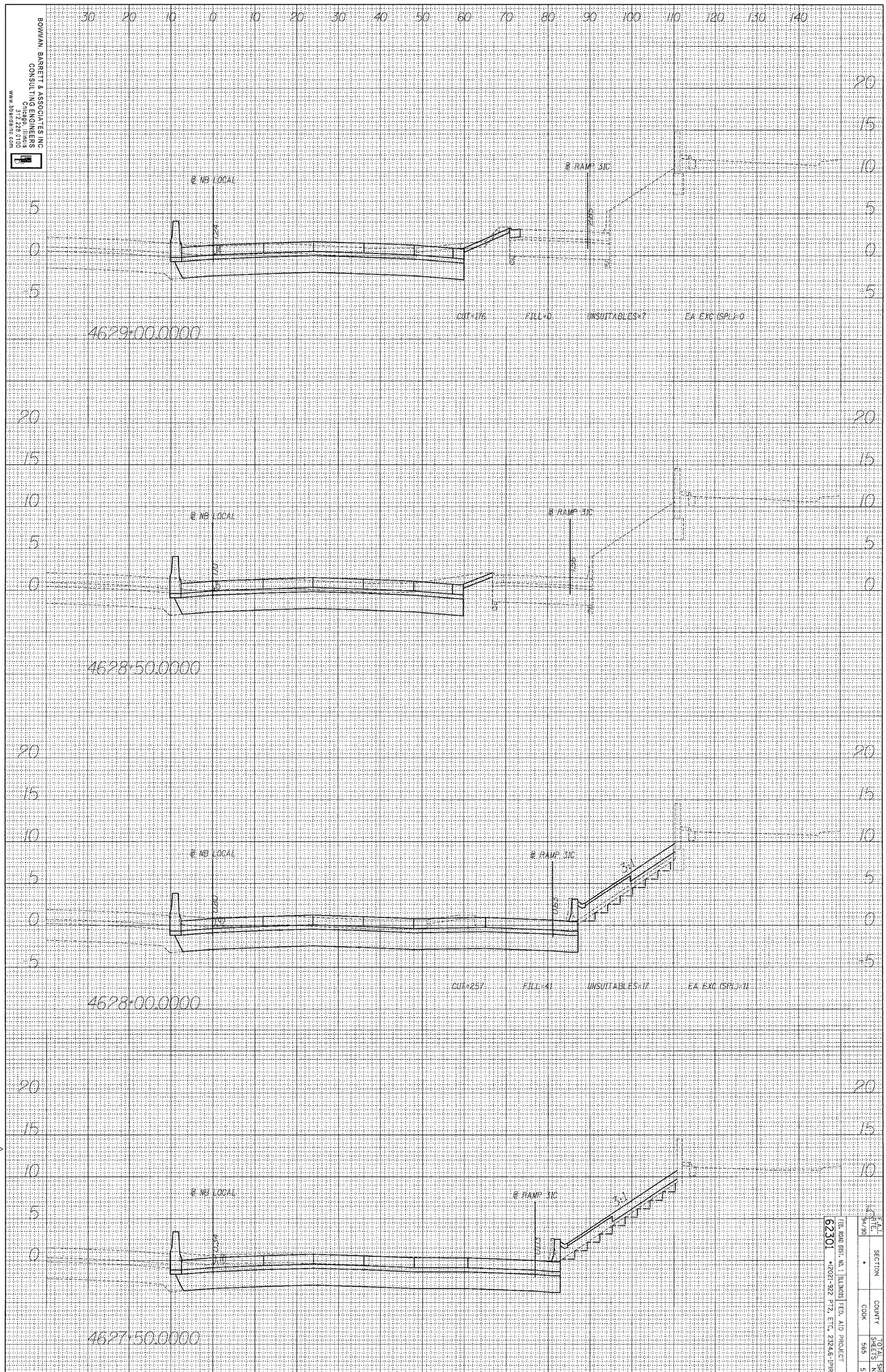

ADDENDUM 2 8/04/06

TOTAL SHEETS	SHEET NO.	COUNTY	SECTION	STATE	FED. ROAD DIST. NO. 1	ILLINOIS	FED. AID PROJECT
565	533	COOK	*	94/99			

62301

*(2021-92) PT2, ETC. 23246-1PR-10

8/4/2006 6:01:08 PM

N:\660\cadd\civil\NB\SHEETS\660_IBCXS01.dgn

F.A.I. RTE.	SECTION	COUNTY	TOTAL SHEETS	SHEET NO.
94/90	*	COOK	565	534

FED. ROAD DIST. NO. 1 | ILLINOIS | FED. AID PROJECT

62301 *(2021-922 PT2, ETC. 2324.6-1P)R-10

FINAL SURVEY	BY	DATE
SURVEYED		
PLOTTED		
NOTE BOOK TEMPLATE		
AREAS		
NO. AREAS CHECKED		

ORIGINAL SURVEY	BY	DATE
SURVEYED		
PLOTTED		
NOTE BOOK TEMPLATE		
AREAS		
NO. AREAS CHECKED		

BOWMAN, BARRETT & ASSOCIATES INC.
CONSULTING ENGINEERS
Chicago, Illinois
312.228.0100
www.bbandainc.com

N:\660\cadd\civil\NB\SHEET\S660_JBCXS01.dgn

8/4/2006 6:01:10 PM

2 ADDENDUM 2 8/04/06 2

F.A.I. RTE.	SECTION	COUNTY	TOTAL SHEETS	SHEET NO.
94/90	*	COOK	565	535

FED. ROAD DIST. NO. 1 | ILLINOIS | FED. AID PROJECT

62301 *(2021-922 PT2, ETC. 2324.6-1P)R-10

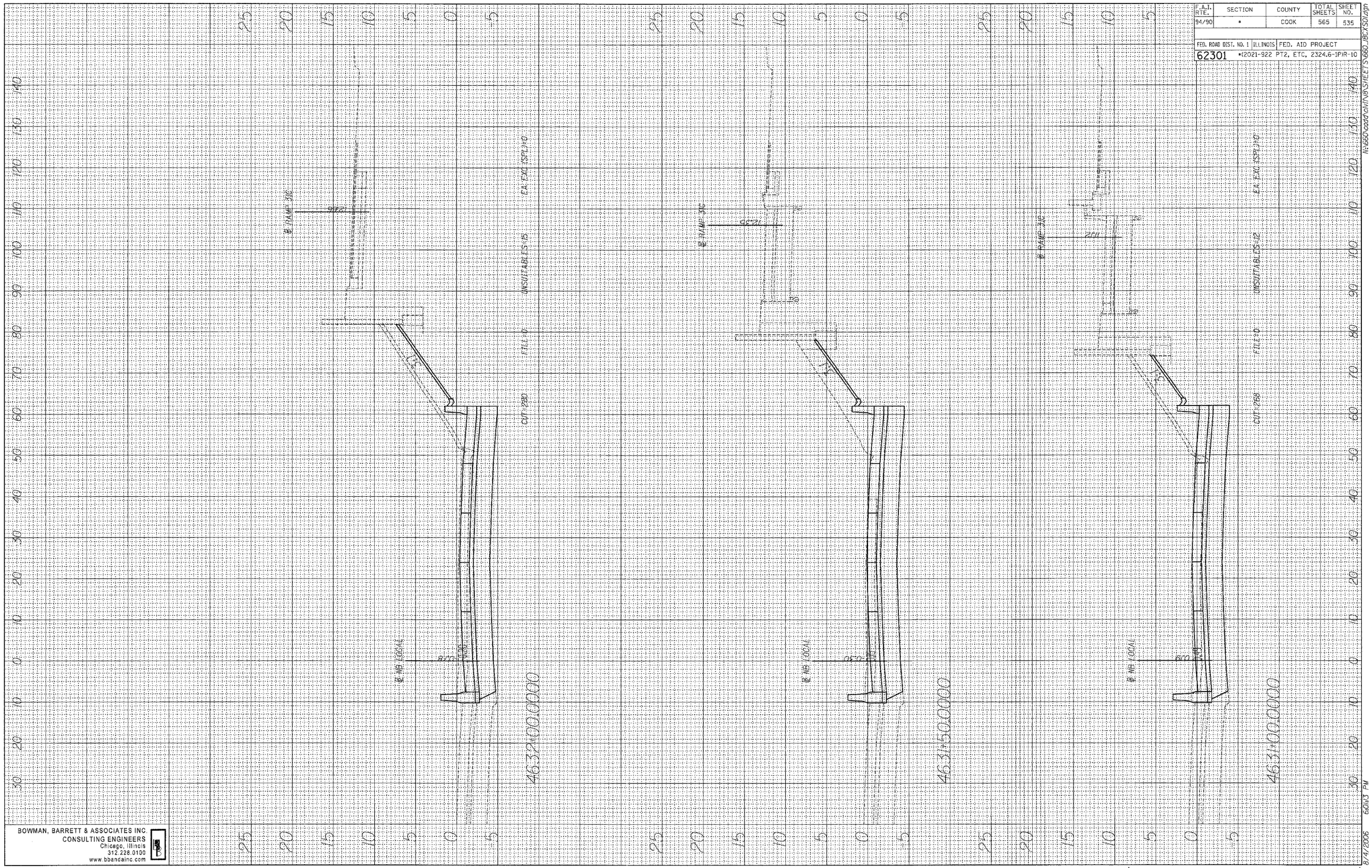

FINAL SURVEY	BY	DATE
SURVEYED		
PLOTTED		
TEMPLATE		
AREAS		
AREAS CHECKED		
NOTE BOOK NO.		

ORIGINAL SURVEY	BY	DATE
SURVEYED		
PLOTTED		
TEMPLATE		
AREAS		
AREAS CHECKED		
NOTE BOOK NO.		

BOWMAN, BARRETT & ASSOCIATES INC
CONSULTING ENGINEERS
Chicago, Illinois
312.228.0100
www.bbandainc.com

ADDENDUM 2 8/04/06

N:\660cadd\civil\SHEETS\660_18C(SOI).dgn

8/4/2006 6:01:13 PM

F.A.I. RTE.	SECTION	COUNTY	TOTAL SHEETS	SHEET NO.
94/90	*	COOK	565	535A

FED. ROAD DIST. NO. 1	ILLINOIS	FED. AID PROJECT
62301	*(2021-922 PT2, ETC. 2324.6-1PJR-10	

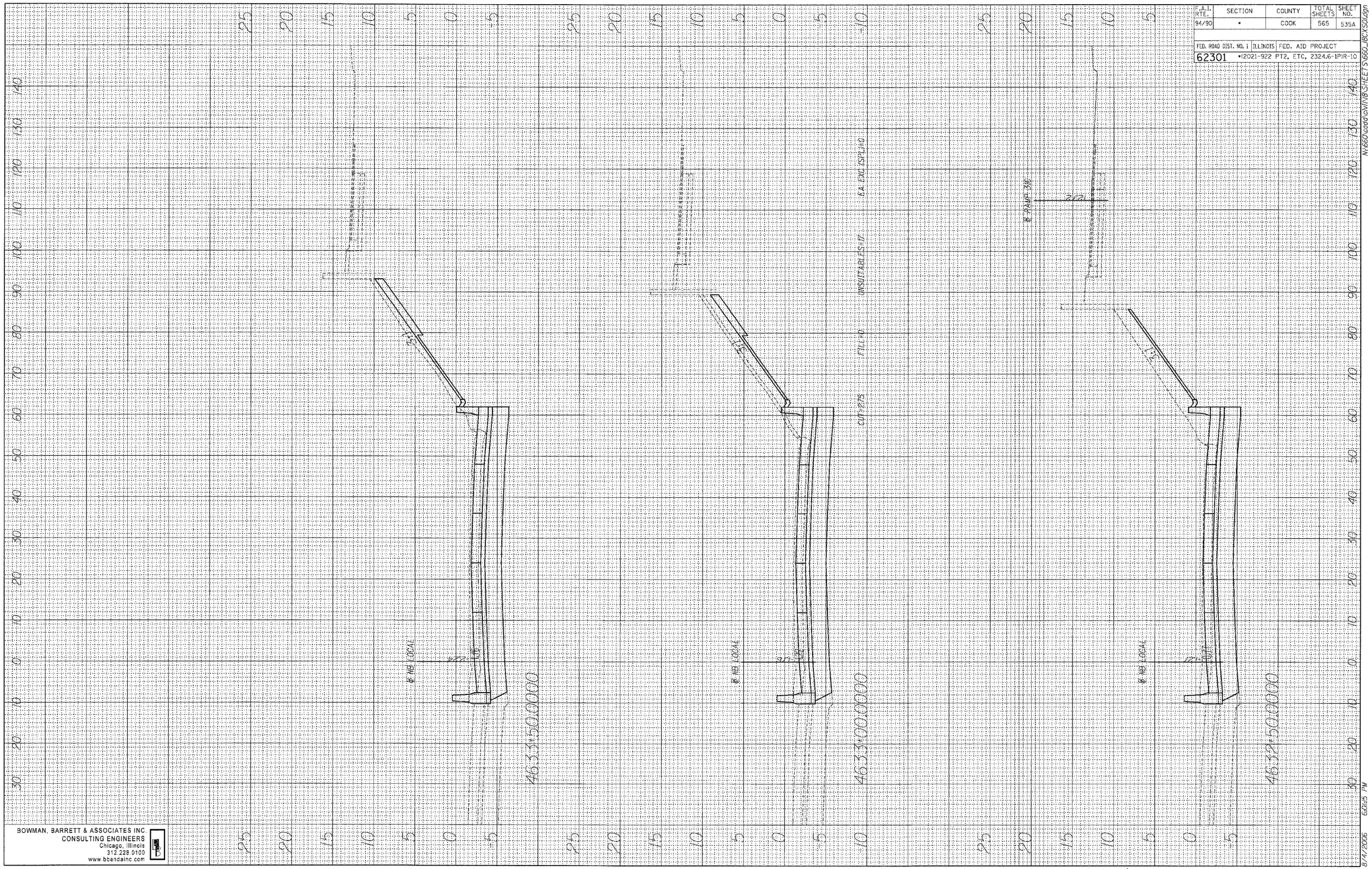

FINAL SURVEY	BY	DATE
SURVEYED		
PLOTTED		
NOTE BOOK TEMPLATE		
AREAS		
NO. AREAS CHECKED		

ORIGINAL SURVEY	BY	DATE
SURVEYED		
PLOTTED		
NOTE BOOK TEMPLATE		
AREAS		
NO. AREAS CHECKED		

BOWMAN, BARRETT & ASSOCIATES INC.
CONSULTING ENGINEERS
Chicago, Illinois
312.228.0100
www.bbandainc.com

N:\660\cadd\CIVIL\SHEETS\660_IBCXSO1.dgn

8/4/2006 6:01:15 PM

2 ADDENDUM 2 8/04/06 2

ORIGINAL SURVEY		BY	DATE
NOTE BOOK	SURVEYED		
	PLOTTED		
	TEMPLATE		
	AREAS		
NO.	AREAS CHECKED		

FINAL SURVEY		BY	DATE
NOTE BOOK	SURVEYED		
	PLOTTED		
	TEMPLATE		
	AREAS		
NO.	AREAS CHECKED		

BOWMAN, BARRETT & ASSOCIATES, INC
CONSULTING ENGINEERS
1000 Jorie Boulevard
Oak Brook, Illinois 60523
(312) 228.7000
www.bbandainc.com

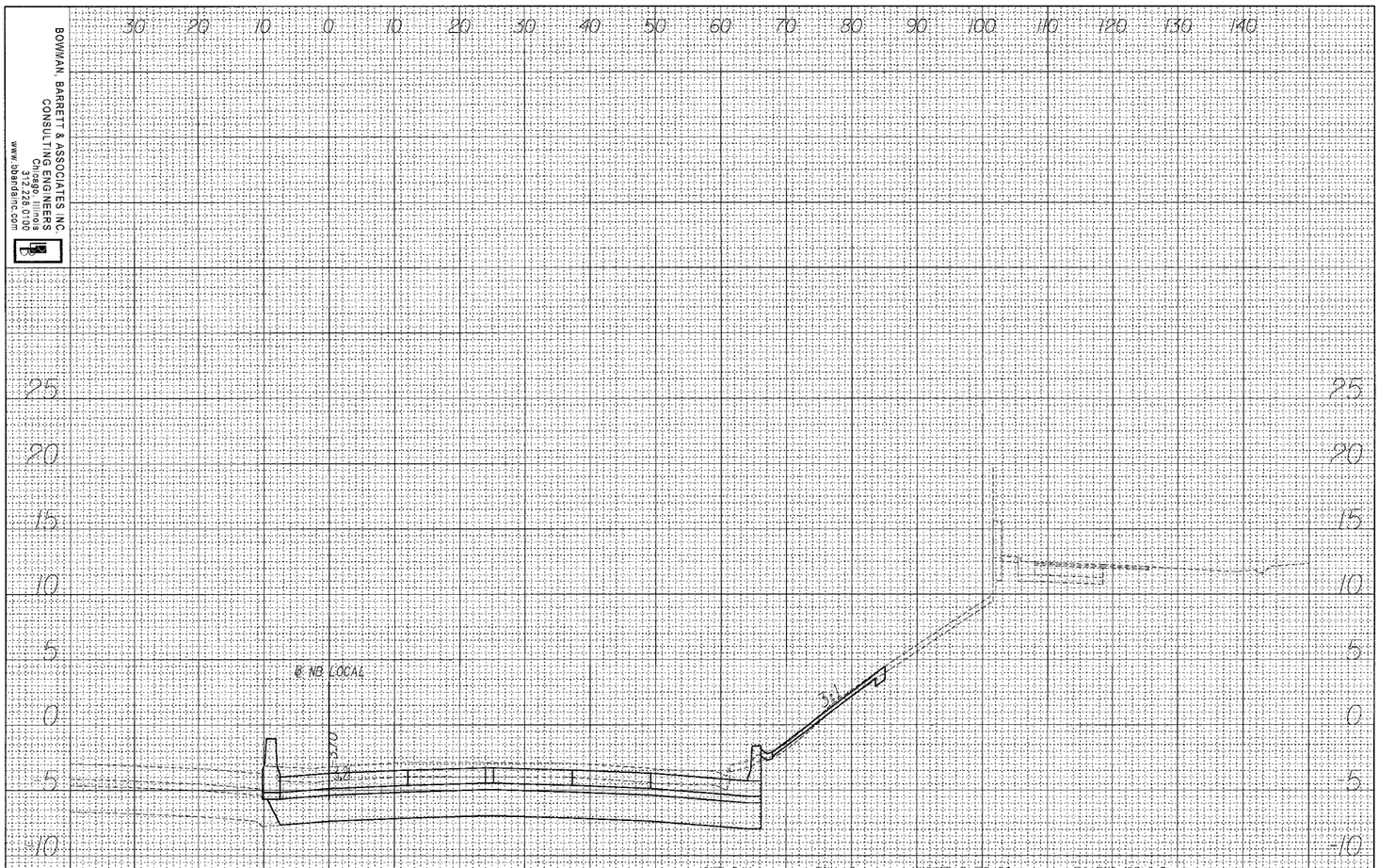

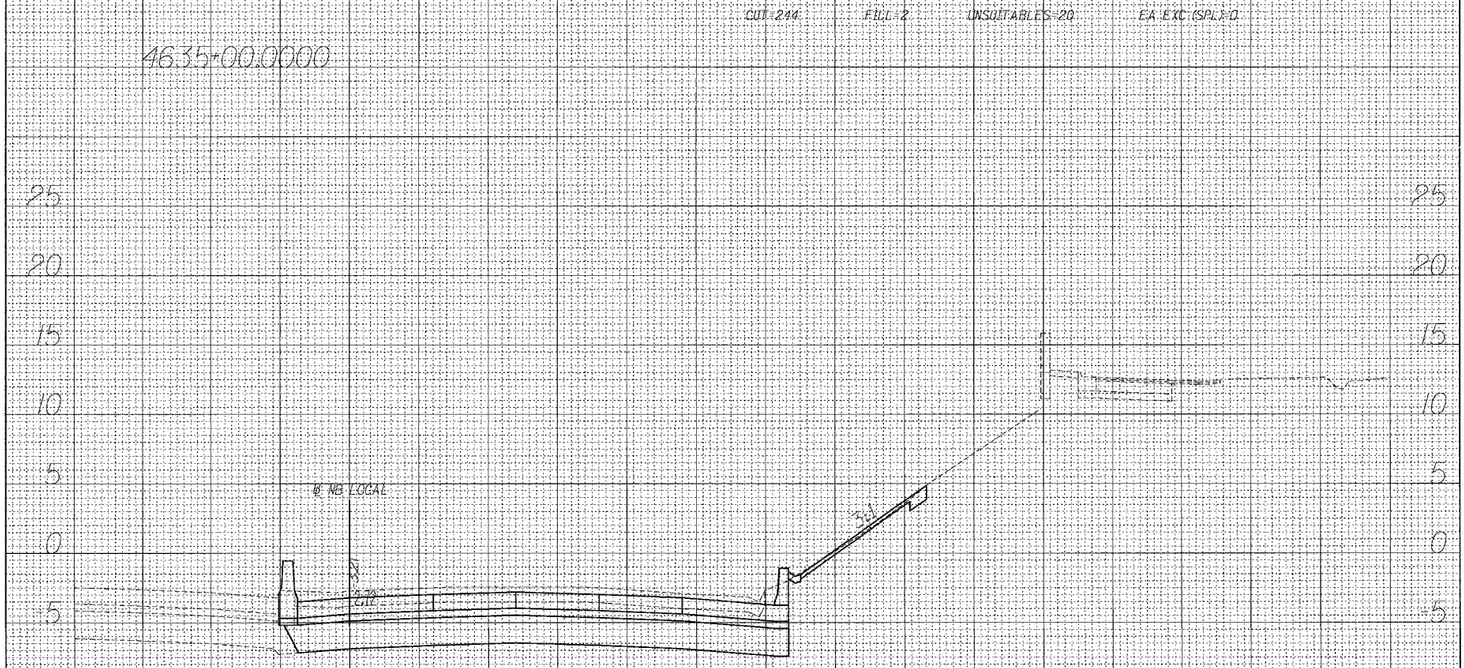

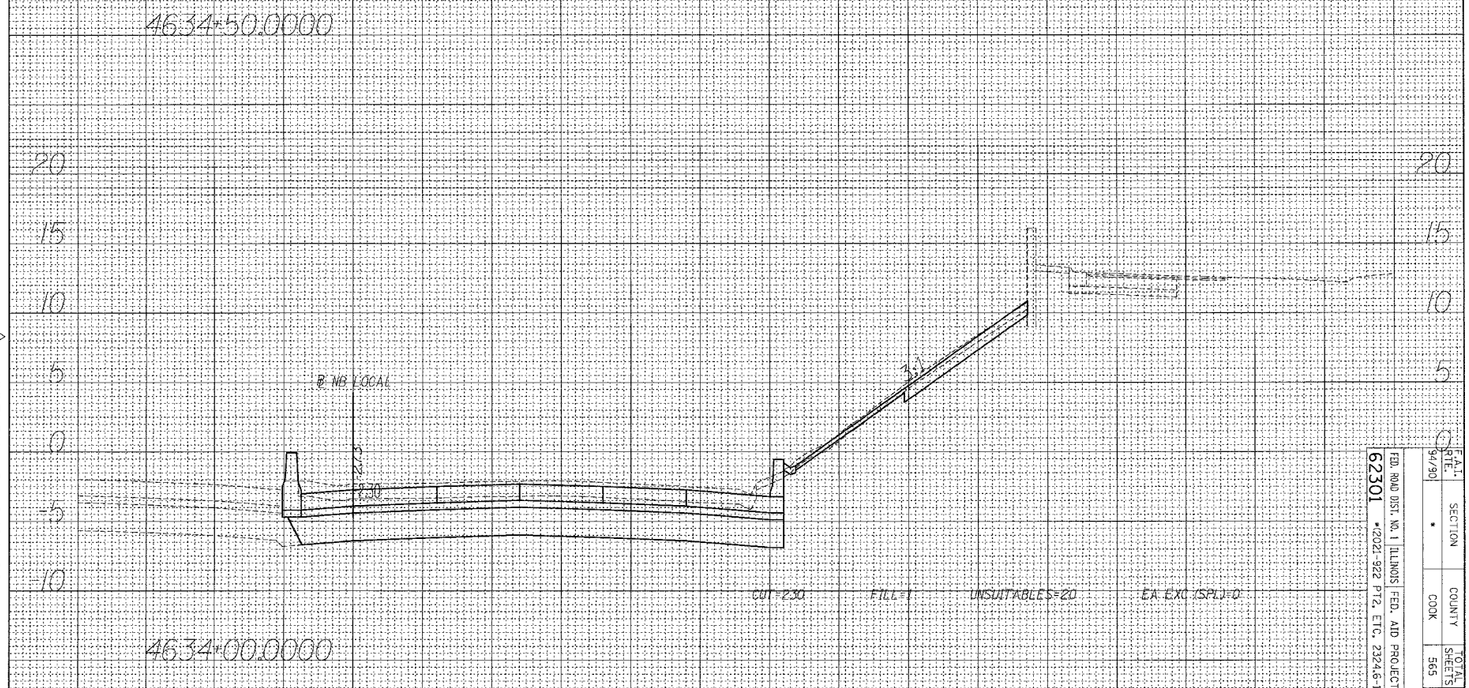

F.A.I. RTE.	SECTION	COUNTY	TOTAL SHEETS	SHEET NO.
64/90	*	COOK	565	535B

FED. ROAD DIST. NO. 1 ILLINOIS FED. AID PROJECT

62301 *2021-322-P2, ETC. 2324-6-PR-10

ADDENDUM 2 8/04/06

8/4/2006 6:01:17 PM

N:\660\cadd\civil\8\SHEETS\660_IBCXS01.dgn

F.A.I. RTE.	SECTION	COUNTY	TOTAL SHEETS	SHEET NO.
94/90	*	COOK	565	535C

FED. ROAD DIST. NO. 1	ILLINOIS	FED. AID PROJECT
62301	*(2021-922 PT2, ETC, 2324.6-1P)R-10	

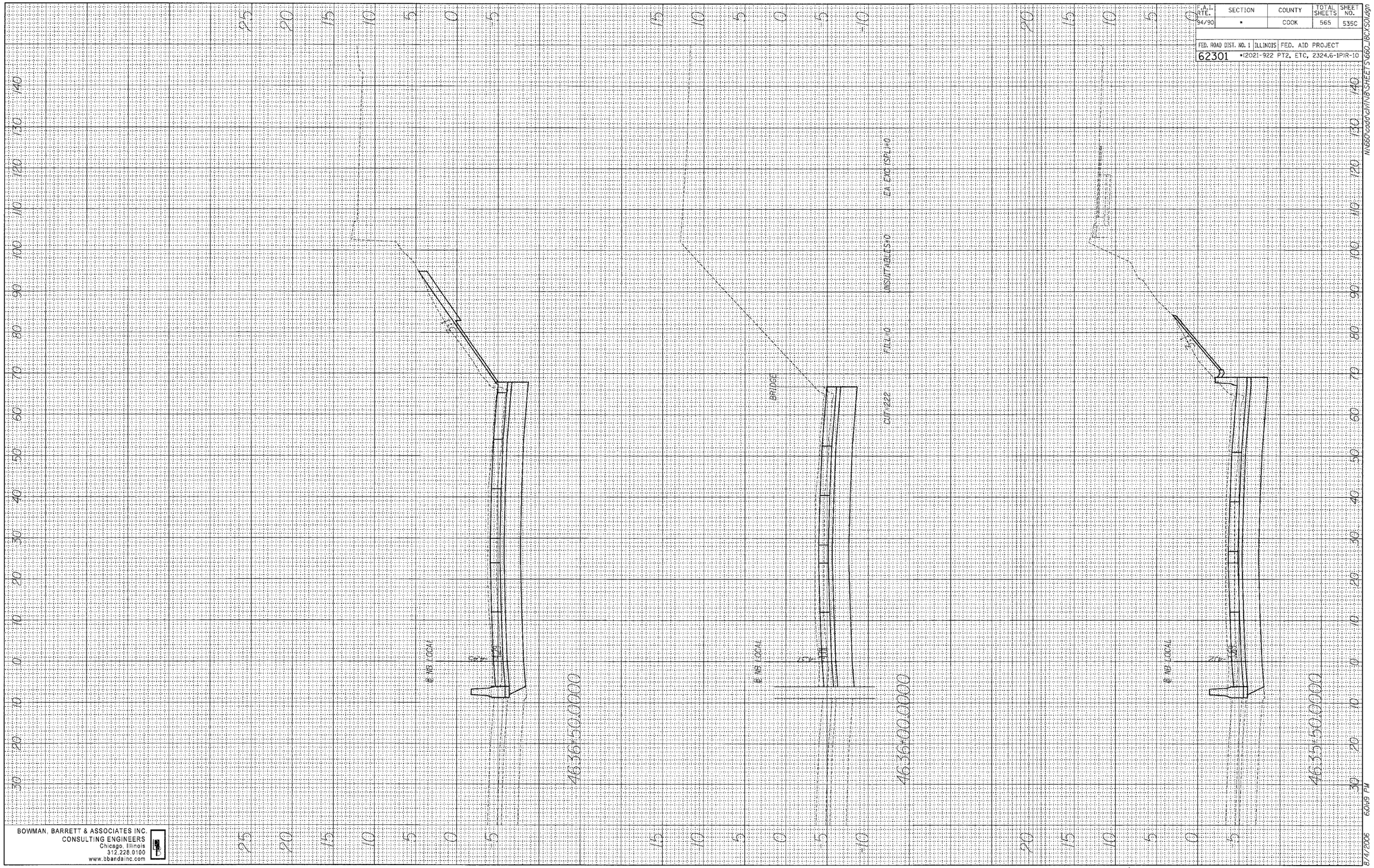

ORIGINAL SURVEY	SURVEYED	BY	DATE
	PLOTTED		
NOTE BOOK	TEMPLATE		
	AREAS		
NO.	AREAS CHECKED		

FINAL SURVEY	SURVEYED	BY	DATE
	PLOTTED		
NOTE BOOK	TEMPLATE		
	AREAS		
NO.	AREAS CHECKED		

BOWMAN, BARRETT & ASSOCIATES INC.
CONSULTING ENGINEERS
Chicago, Illinois
312.228.0100
www.bbandainc.com

N:\660\cadd\chl\INS\SHEETS\660_18CXSD.dgn

8/4/2006 6:01:19 PM

2 ADDENDUM 2 8/04/06 2

F.A.I. RTE.	SECTION	COUNTY	TOTAL SHEETS	SHEET NO.
94/90	*	COOK	565	5350

FED. ROAD DIST. NO. 1 | ILLINOIS | FED. AID PROJECT

62301 *(2021-922 PT2, ETC. 2324.6-1P)R-10

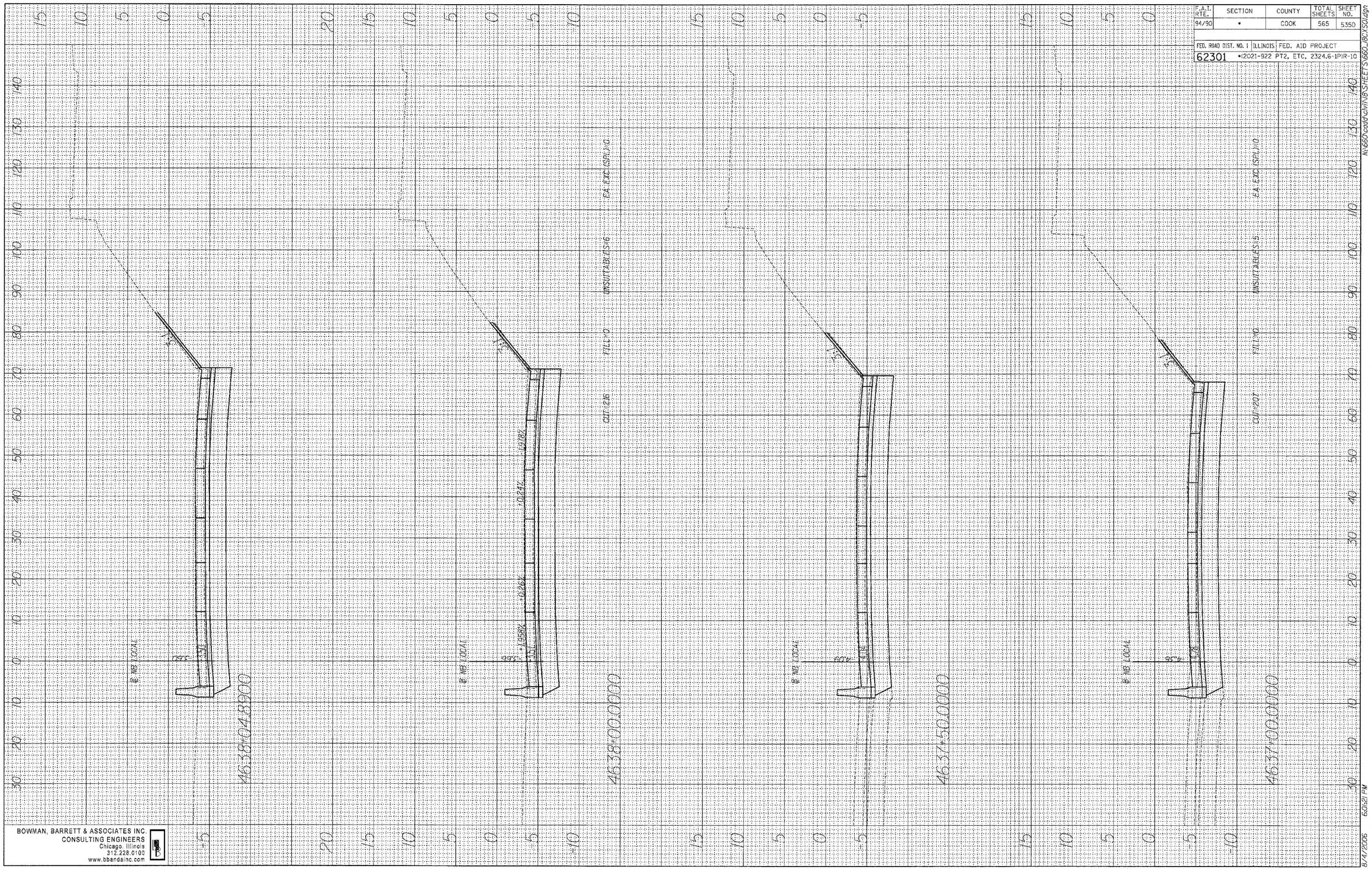

FINAL SURVEY		BY	DATE
NOTE BOOK	SURVEYED		
	PLOTTED		
	TEMPLATE		
	AREAS		
	AREAS CHECKED		
NO.			

ORIGINAL SURVEY		BY	DATE
NOTE BOOK	SURVEYED		
	PLOTTED		
	TEMPLATE		
	AREAS		
	AREAS CHECKED		
NO.			

BOWMAN, BARRETT & ASSOCIATES INC.
CONSULTING ENGINEERS
Chicago, Illinois
312.228.0100
www.bbandainc.com

N:\660\cadd\civil\B\SHEETS\660_IBC\SOI.dgn

6/14/2006 6:01:21 PM

2 ADDENDUM 2 8/04/06 2

F.A.I. RTE.	SECTION	COUNTY	TOTAL SHEETS	SHEET NO.
94/90	*	COOK	565	535E

FED. ROAD DIST. NO. 1 | ILLINOIS | FED. AID PROJECT

62301 *(2021-922 PT2, ETC, 2324.6-1P)R-10

N:\660cadd\civil\B\SHEETS\660_J6CXS01.dgn

FINAL SURVEY	BY	DATE
SURVEYED		
PLOTTED		
TEMPLATE		
AREAS		
AREAS CHECKED		
NOTE BOOK NO.		

ORIGINAL SURVEY	BY	DATE
SURVEYED		
PLOTTED		
TEMPLATE		
AREAS		
AREAS CHECKED		
NOTE BOOK NO.		

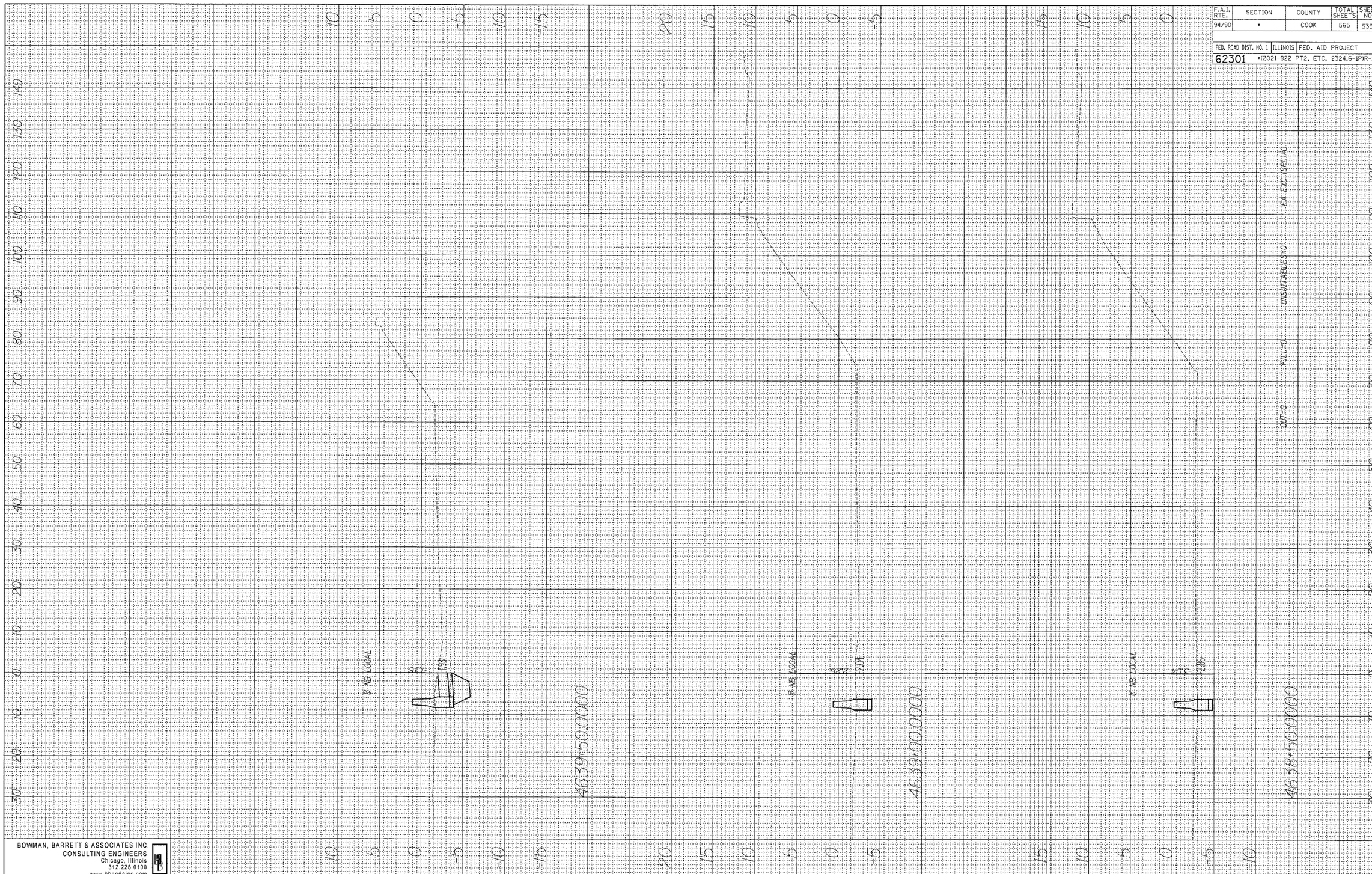

BOWMAN, BARRETT & ASSOCIATES INC.
CONSULTING ENGINEERS
Chicago, Illinois
312.228.0100
www.bbandainc.com

8/17/2006 9:01:27 PM

ADDENDUM 2 8/04/06