CONTRACT NO. 60B86

F.A.I. RTE.	SECTION	COUNTY	TOTAL SHEETS	SHEET NO.
55	2006-032 BY	WILL	505	251
STA.		TO STA.		
FED. ROAD DIST. NO.	ILLINOIS	FED. AID PROJECT		

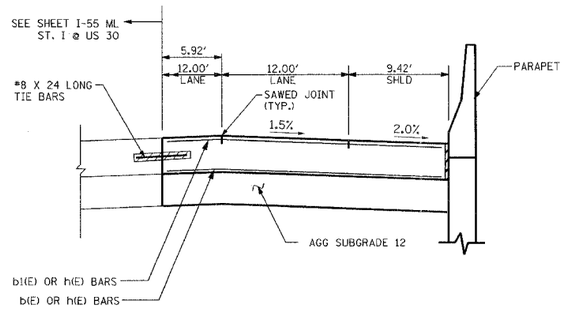

SECTION A-A: I-55 NB ST. II @ US 30

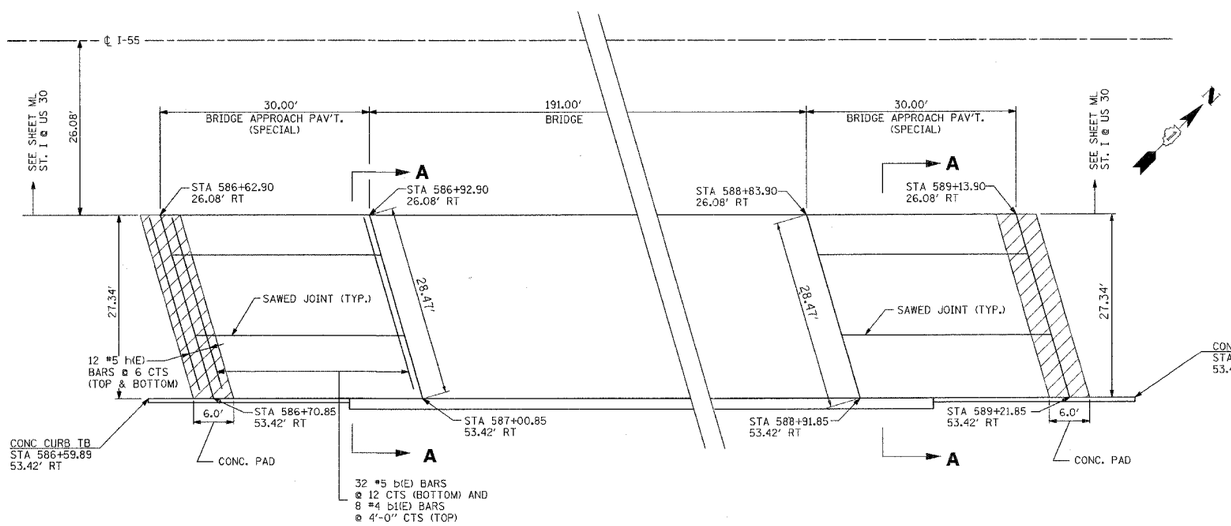

PLAN: I-55 NB ST. II @ US 30

BILL OF MATERIALS
I-55 NB SOTHWEST AT US30

Bar	No.	Size #	Length (feet)	Shape
a (E)	56	9	30.99	
a_1 (E)	28	5	30.74	
a_2 (E)	28	4	6.76	
a_3 (E)	28	4	5.58	
b (E)	32	5	28.30	
b_1 (E)	8	4	28.30	
h (E)	24	5	28.30	
d (E)	-	-	-	
t (E)	-	-	-	

	Item	Unit	Total
*	Concrete Structures	Cu Yd	38.0
*	Reinforcement Bars, Epoxy Coated	Pound	8,821
*	Preformed Joint Seal	Foot	30.1
*	Polyethylene Bond Breaker	Sq Yd	19.1
*	Concrete Pad	Sq Yd	19.1
*	Bridge Approach Pavement (Special)	Sq Yd	91.1
*	Tie Bars	Each	-
*	Aggregate Subgrade 12"	Sq Yd	91.1

BILL OF MATERIALS
I-55 NB NORTHEAST AT US 30

Bar	No.	Size #	Length (feet)	Shape
a (E)	56	9	30.99	
a_1 (E)	28	5	30.74	
a_2 (E)	28	4	6.76	
a_3 (E)	28	4	5.58	
b (E)	32	5	28.30	
b_1 (E)	8	4	28.30	
h (E)	24	5	28.30	
d (E)	-	-	-	
t (E)	-	-	-	

	Item	Unit	Total
*	Concrete Structures	Cu Yd	38.0
*	Reinforcement Bars, Epoxy Coated	Pound	8,821
*	Preformed Joint Seal	Foot	30.1
*	Polyethylene Bond Breaker	Sq Yd	19.1
*	Concrete Pad	Sq Yd	19.1
*	Bridge Approach Pavement (Special)	Sq Yd	91.1
*	Tie Bars	Each	-
*	Aggregate Subgrade 12"	Sq Yd	91.1

* ITEM INCLUDED IN THE COST OF BRIDGE APPROACH PAVEMENT (SPECIAL).

NOTES:

1. ALL DIMENSIONS ARE IN FEET (') UNLESS OTHERWISE NOTED.
2. ALL REINFORCING BARS SHALL BE EPOXY COATED.
3. DETAILING NOT SHOWN ON THIS SHEET SHALL CONFORM TO STATE STANDARD 420401 (BRIDGE APPROACH PAVEMENT).
4. THE UNIT PRICE BID FOR BRIDGE APPROACH PAVEMENT (SPECIAL) SHALL INCLUDE TIE BARS, PREFORMED JOINT SEAL, POLYETHYLENE BOND BREAKER, AGGREGATE SUBGRADE, REINFORCEMENT BARS, THE CONCRETE PAD (INCLUDING REINFORCEMENT AND EXCAVATION), CONCRETE BARRIERS (INCLUDING ALL CONCRETE AND REINFORCEMENT), AND ALL OTHER ITEMS NECESSARY TO COMPLETE THIS ITEM OF WORK.

REVISIONS	
NAME	DATE

ILLINOIS DEPARTMENT OF TRANSPORTATION
FAI ROUTE 55
US 30 (PLAINFIELD ROAD) TO LILY CACHE SLOUGH

ROADWAY DETAILS
BRIDGE APPROACH PAV'T (SPECIAL)
NB I-55 OVER US 30 (STAGE II)

SCALE: N.T.S — DRAWN BY GJF
DATE 07/21/06 — CHECKED BY DDH

TENG
TENG & ASSOCIATES, INC.
ENGINEERS/ARCHITECTS/PLANNERS
CHICAGO, ILLINOIS

PLOT DATE = $DATE$
FILE NAME = $FILEL$
PLOT SCALE = $SCALE$
USER NAME = $USER$

~ARD12\A2B1.DGN, ~ARD12\A2B1.DGN S:\DOCUMENT\B236152\VCIVIL\DGN\RD12AA06.SHT
7-18-2006, 17:28:47 BA:ZEKKJ