CONTRACT NO. 60B85

F.A.I. RTE.	SECTION	COUNTY	TOTAL SHEETS	SHEET NO.
55	2006-031 BY	WILL	137	82
STA.		TO STA.		
FED. ROAD DIST. NO.	ILLINOIS	FED. AID PROJECT		

When "A" is 3'-6" or less, the temporary concrete barrier shall be anchored to the new slab according to Detail I or Detail II. No anchorage is required when "A" is greater than 3'-6".

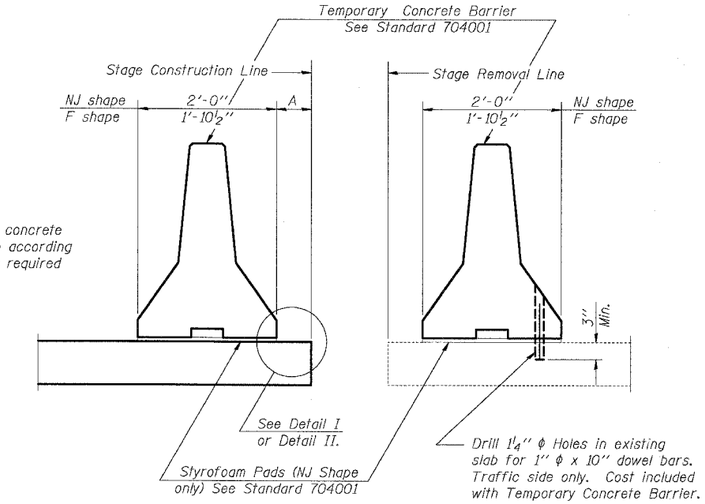

NEW SLAB

EXISTING SLAB

SECTIONS THRU SLAB

NOTES

Detail I - With Bar Splicer or Couplers:
Connect one (1) 1"x7"x10" steel ℙ to the top layer of couplers with 2-⅝" ϕ bolts screwed to coupler at approximate ℄ of each barrier panel.

Detail II - With Extended Reinforcement Bars:
Connect one (1) 1"x7"x10" steel ℙ to the concrete slab with 2-⅝" ϕ Expansion Anchors or cast in place inserts spaced between the top layer of reinforcement at approximate ℄ of each barrier panel.

Cost of anchorage is included with Temporary Concrete Barrier.

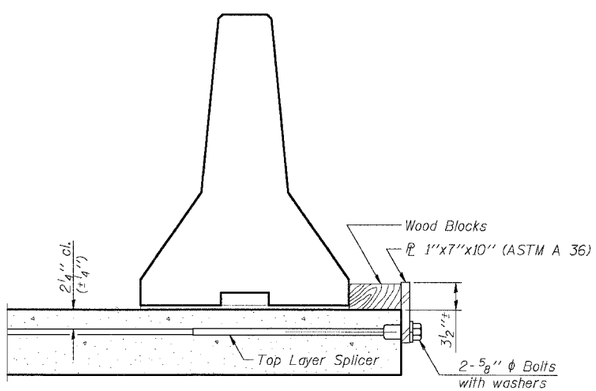

DETAIL I

The 1"x7"x10" Plate shall not be removed until Stage II Construction forms and reinforcement bars are in place.

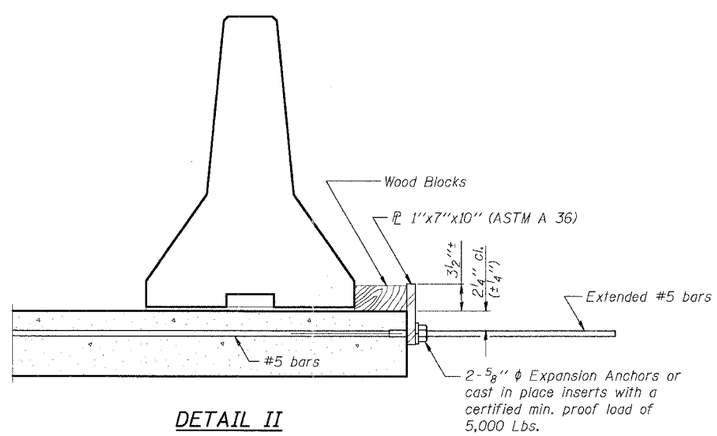

DETAIL II

The 1"x7"x10" Plate shall not be removed until Stage II Construction forms and all reinforcement bars are in place and the concrete is ready to be placed.

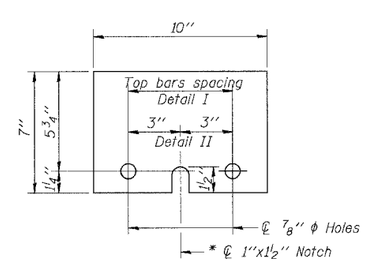

ℙ 1"x7"x10"

* Required only with Detail II

TEMPORARY CONCRETE BARRIER FOR STAGE CONSTRUCTION

SHT. SA-18 OF 21

REVISIONS	
NAME	DATE

ILLINOIS DEPARTMENT OF TRANSPORTATION
FAI ROUTE 55 (OVER CSX RR AND SUNNYLAND DRAIN)
BRIDGE WIDENING
SB I-55 OVER CSX RAILROAD, S.N. 099-0312
STA. 167+72.58, SECTION 2006-031 BY
WILL COUNTY

TEMPORARY CONCRETE BARRIER

SCALE: DRAWN BY MDB
DATE 07/07/06 CHECKED BY MJK

TENG & ASSOCIATES, INC.
ENGINEERS/ARCHITECTS/PLANNERS
CHICAGO, ILLINOIS

R-27

10-22-04

PLOT DATE = $DATE$
FILE NAME = $FILEL$
PLOT SCALE = $SCALE$
USER NAME = $USER$

..\BD-P91\A082.DGN
7-25-2006, 8:02:58
GARCIAAZ
S:\DOCUMENT\82361581\STRUCTURDGN\WSP91\A082.SHT