CONTRACT NO. 98963

F.A. RTE.	SECTION	COUNTY	TOTAL SHEETS	SHEET NO.
57/64	(41-3)HBK	JEFFERSON	518	032
STA.		TO STA.		
FED. ROAD DIST. NO.	ILLINOIS	FED. AID PROJECT		

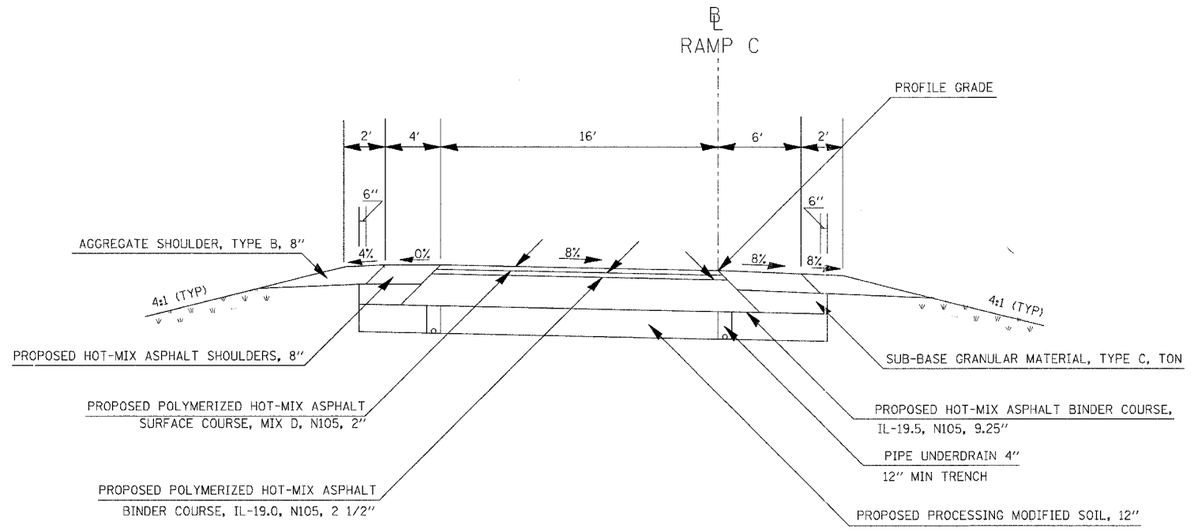

TO BE USED

STA 513+94.40 TO STA 515+28.63

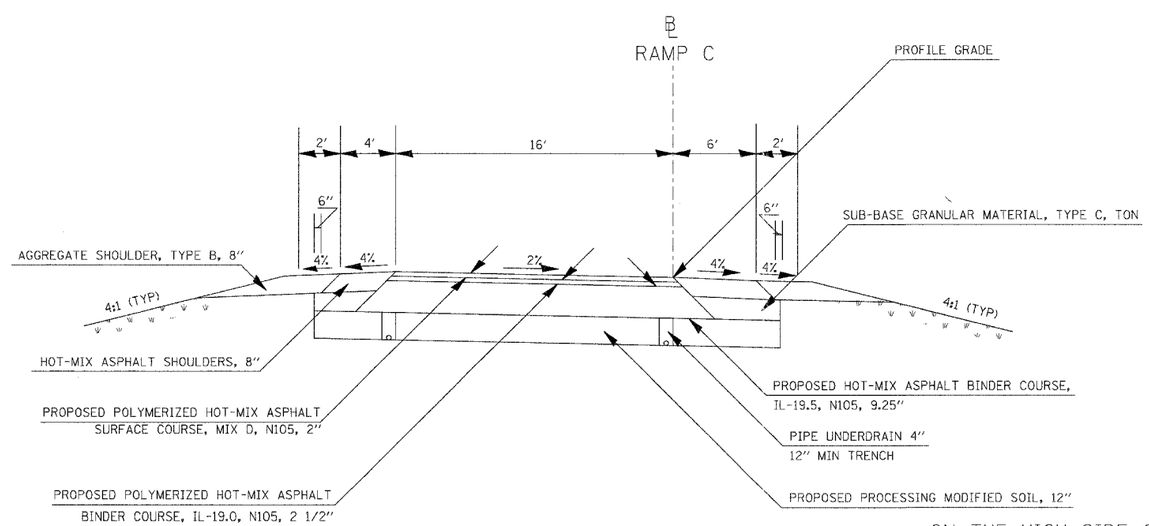

TO BE USED

STA 507+54.98 TO STA 511+34.40

ATTAIN SUPERELEVATION
STA 511+34.40 TO STA 513+94.40

REMOVE SUPERELEVATION
SEE STANDARD 406001-03

* ON THE HIGH SIDE OF SUPERELEVATED SECTIONS, THE MAXIMUM SHOULDER ROLLOVER SHALL NOT EXCEED 8%
* THE MINIMUM TRENCH WIDTH FOR PIPE UNDERDRAINS SHALL BE 12"
* FOR GUARDRAIL LOCATIONS SEE GUARDRAILS SCHEDULE
* SEE RAMP C CROSS SECTIONS FOR CROSS SLOPES

PLOT DATE = 03\21\2007, 07:27 AM
FILE NAME = I:\98_jobs\98s2019a\IDOT RAMPS\typicals.m32
PLOT SCALE = 5.0000 ' / IN.
USER NAME = Kwk

TYPICALS RAMP C