F.A.I. RTE.	SECTION	COUNTY	TOTAL SHEETS	SHEET NO.
94	2005-048 L	COOK	85	7
STA. ----+--		TO STA. ----+--		
FED. ROAD DIST. NO.	ILLINOIS	FED. AID PROJECT		

60A23

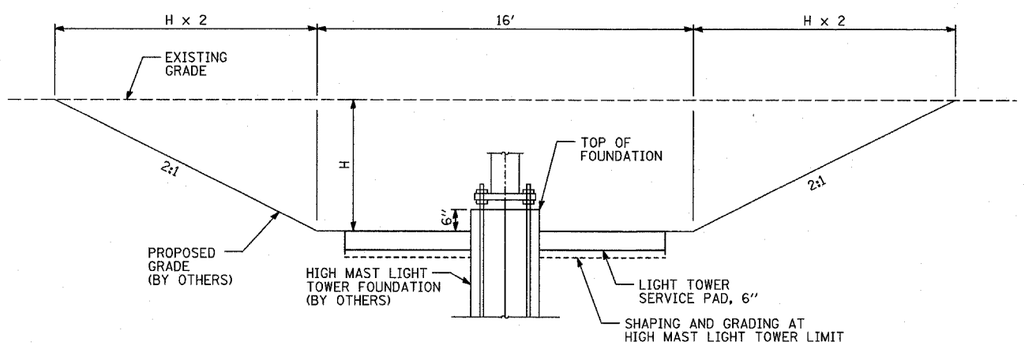

CUT GRADING DETAIL
SECTION A-A

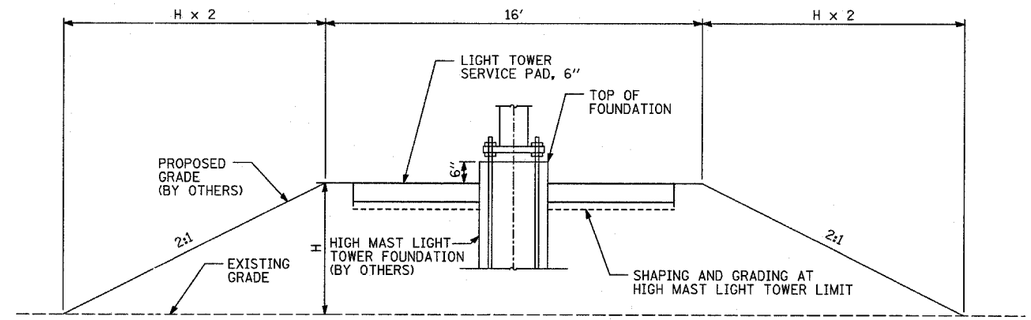

FILL GRADING DETAIL
SECTION A-A

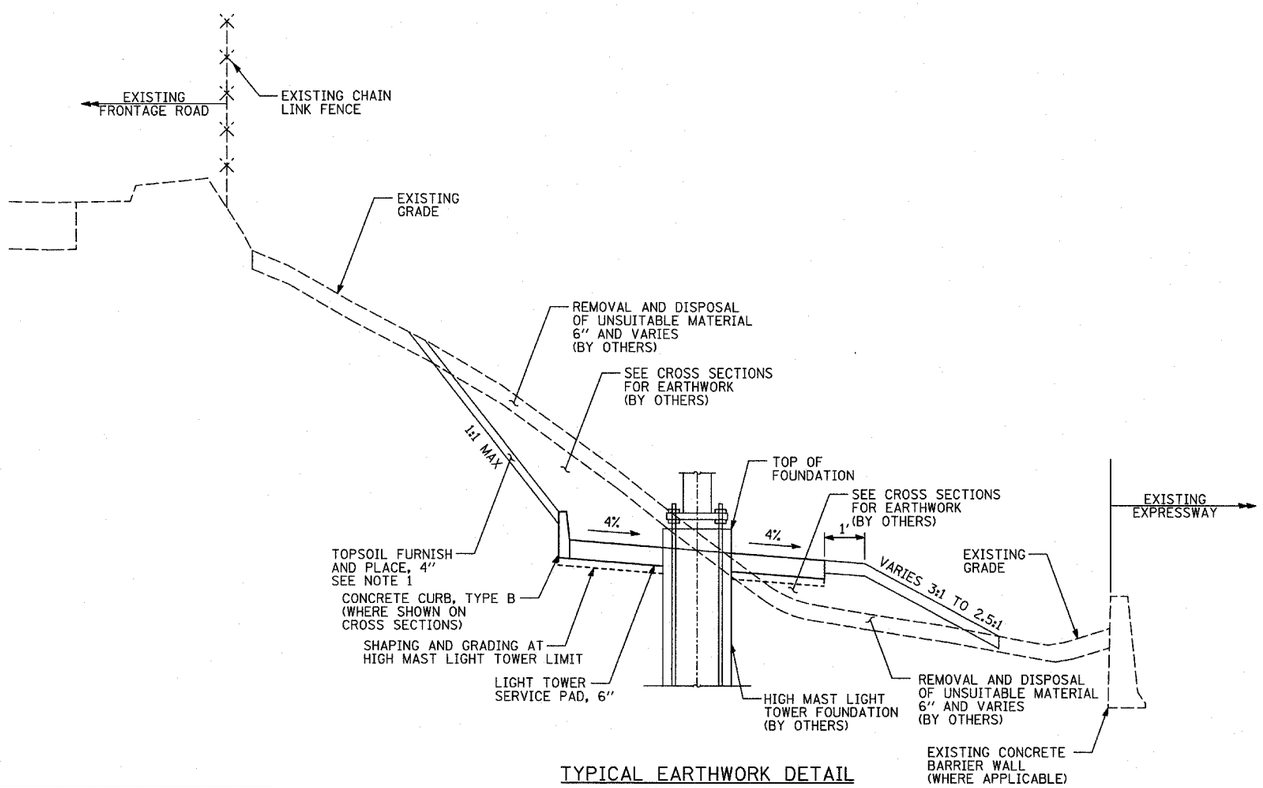

TYPICAL EARTHWORK DETAIL
SECTION B-B

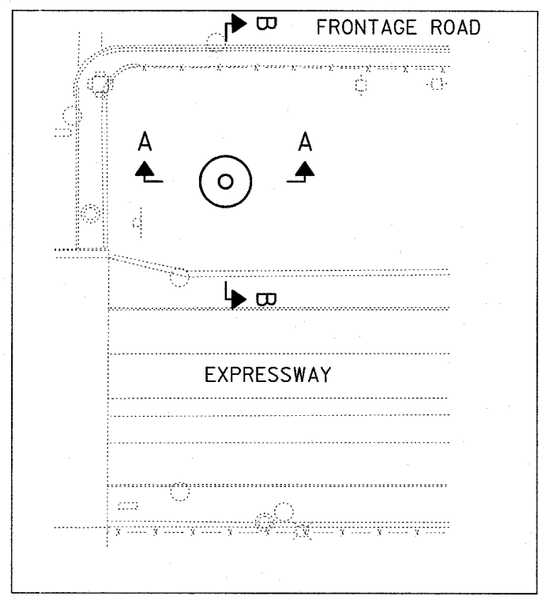

TYPICAL PLAN

NOTES:

1. TOPSOIL PLACEMENT IS NOT SHOWN ON THE PLANS, HOWEVER, A QUANTITY OF 4" TOPSOIL HAS BEEN PROVIDED AT EACH HMLT SERVICE PAD LOCATION TO ALLOW RESTORATION OF THE SITE TO PREVIOUS CONDITIONS AS LEFT BY CONTRACTS 62583, 62593 & 62304. THE QUANTITY IS BASED ON A 15' WIDE BAND MEASURED FROM THE OUTER LIMITS OF THE PAD. TOPSOIL PLACEMENT SHALL ONLY BE COMPLETED WHEN APPROVED BY THE ENGINEER.

2. COMPOST PLACEMENT IS NOT SHOWN ON THE PLANS, HOWEVER, A QUANTITY OF 6" COMPOST HAS BEEN PROVIDED AT HMLT 6MMN4, 6OIJ4, 6OIJ1, 6OKL1, 6OKL2, 6PAB4, 5PIJ3, 5PIJ2, 6OEF2, & 6OMN4 TO ALLOW RESTORATION OF SITE TO PREVIOUS CONDITIONS AS LEFT BY CONTRACTS 62583, 62593 & 62304. THE QUANTITY WAS CALCULATED USING THE SAME METHOD AS IN NOTE 1. COMPOST PLACEMENT SHALL ONLY BE COMPLETED WHEN APPROVED BY THE ENGINEER.

TY·LIN INTERNATIONAL

REVISIONS	
NAME	DATE
REVISED	06/20/07

ILLINOIS DEPARTMENT OF TRANSPORTATION
F.A.I. 94 (DAN RYAN EXPRESSWAY)
I-57 to 71st STREET

HIGH MAST LIGHT TOWER SERVICE PAD GRADING DETAIL

SCALE: 1"=20' DRAWN BY: RTM
DATE: JANUARY 9, 2007 CHECKED BY: TGB