09–19–2025 LETTING ITEM 043

F.A.I. RTE.	SECTION	COUNTY	TOTAL SHEETS	SHEET NO.
74	(92-9)BR	VERMILION	87	1
	ILLINOIS	CONTRACT NO. 70D66		

P–95–029–22

STATE OF ILLINOIS
DEPARTMENT OF TRANSPORTATION

FOR INDEX OF SHEETS, SEE SHEET NO. 2

FOR SUMMARY OF QUANTITIES, SEE SHEET NO. 3 – 9

PROPOSED HIGHWAY PLANS

FAI RTE. 74 (I–74)
SECTION (92–9)BR
PROJECT NO. BR–ZDC3(106)

BRIDGE REPLACEMENT
VERMILION COUNTY

C–95–026–19
STONY CREEK 2.4 MILES EAST OF ILL 49

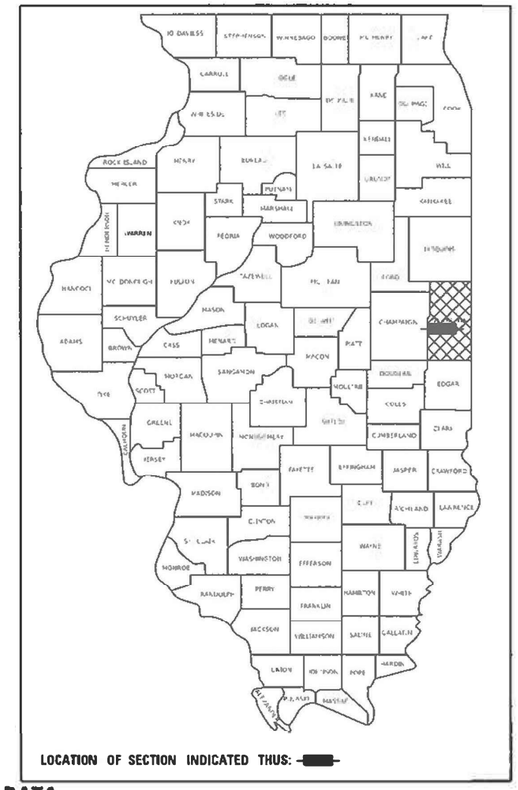

BEGIN IMPROVEMENT
I-74
STA. 1285+24

BRIDGE REPLACEMENT
EXIST S.N. 092-0002 (WB)
PROP S.N. 092-0211 (WB)
STA. 1285+41 TO STA 1287+10
168'-7" BK. - BK. ABUTMENTS
2 SPANS @ 50'-11"(1&3) & 1 SPAN @ 66'-9"(2)
REINF. CONC. DECK
15° SKEW

N

LOCATION MAP
SCALE 1" = 1 MILE

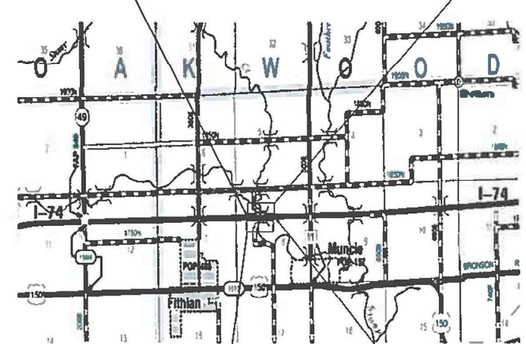

BRIDGE REPLACEMENT
EXIST S.N. 092-0001 (EB)
PROP S.N. 092-0210 (EB)
STA. 1285+24 TO STA 1286+93
168'-7" BK. - BK. ABUTMENTS
2 SPANS @ 50'-11"(1&3) & 1 SPAN @ 66'-9"(2)
REINF. CONC. DECK
15° SKEW

END IMPROVEMENT
I-74
STA. 1287+10

GROSS LENGTH = 169 FT. = 0.032 MILE
NET LENGTH = 169 FT. = 0.032 MILE

TRAFFIC DATA

F.A.I. 74 EASTBOUND	F.A.I. 74 WESTBOUND
FUNCTIONAL CLASSIFICATION: INTERSTATE	FUNCTIONAL CLASSIFICATION: INTERSTATE
POSTED SPEED LIMIT = 70 MPH	POSTED SPEED LIMIT = 70 MPH
DESIGN SPEED LIMIT = 70 MPH	DESIGN SPEED LIMIT = 70 MPH
2023 ADT = 13,200 (32% TRUCKS)	2023 ADT = 13,200 (31% TRUCKS)
2043 ADT = 15,000 (32% TRUCKS)	2043 ADT = 15,000 (31% TRUCKS)

100' 200' 300' — 1" = 100'
10' 20' 30' — 1" = 10'
50' 100' — 1" = 50'
50' 100' — 1" = 40'
50' 100' — 1" = 30'
50' 100' — 1" = 20'

FULL SIZE PLANS HAVE BEEN PREPARED USING STANDARD ENGINEERING SCALES. REDUCED SIZED PLANS WILL NOT CONFORM TO STANDARD SCALES. IN MAKING MEASUREMENTS ON REDUCED PLANS, THE ABOVE SCALES MAY BE USED.

J.U.L.I.E.
JOINT UTILITY LOCATION INFORMATION FOR EXCAVATION
1-800-892-0123
OR 811
TOWNSHIP(S): OAKWOOD

STATE OF ILLINOIS
DEPARTMENT OF TRANSPORTATION

SUBMITTED June 26 20 25
REGIONAL ENGINEER

August 15 20 25
ENGINEER OF DESIGN AND ENVIRONMENT

August 15 20 25
DIRECTOR OF HIGHWAYS PROJECT IMPLEMENTATION

PROJECT ENGINEER : RYAN T. CARROLL
PROJECT MANAGER : CLARE B. DIETZ
(217)465–4181

CONTRACT NO. 70D66

EPSTEIN
800 W FULTON ST
CHICAGO ILLINOIS
60661 1259
TEL 312 454 9100
FAX 312 559 1217
WEB www.epsteinglobal.com

PRINTED BY THE AUTHORITY OF THE STATE OF ILLINOIS

REV. 7/9/25

INDEX OF SHEETS

LIST OF HIGHWAY STANDARDS

STANDARD NUMBER	DESCRIPTION
000001-08	STANDARD SYMBOLS, ABBREVIATIONS AND PATTERNS
001001-02	AREAS OF REINFORCEMENT BARS
001006	DECIMAL EQUIVALENTS OF AN INCH AND FOOT
280001-07	TEMPORARY EROSION CONTROL SYSTEMS
420001-10	PAVEMENT JOINTS
420401-13	PAVEMENT CONNECTOR (PCC) FOR BRIDGE APPROACH SLAB
482001-02	HMA SHOULDER ADJACENT TO FLEXIBLE PAVEMENT
515001-04	NAME PLATE FOR BRIDGES
601001-05	PIPE UNDERDRAINS
601101-02	CONCRETE HEADWALL FOR PIPE DRAIN
630001-13	STEEL PLATE BEAM GUARDRAIL
630301-09	SHOULDER WIDENING FOR TYPE 1 (SPECIAL) GUARDRAIL TERMINALS
631031-18	TRAFFIC BARRIER TERMINAL, TYPE 6
642001-03	SHOULDER RUMBLE STRIPS, 16 INCHES
667101-02	PERMANENT SURVEY MARKERS
701400-12	APPROACH TO LANE CLOSURE FREEWAY/EXPRESSWAY
701401-13	LANE CLOSURE FREEWAY/EXPRESSWAY
701402-12	LANE CLOSURE FREEWAY/EXPRESSWAY WITH BARRIER
701428-01	TRAFFIC CONTROL SETUP AND REMOVAL FREEWAY/EXPRESSWAY
701901-10	TRAFFIC CONTROL DEVICES
704001-08	TEMPORARY CONCRETE BARRIER
725001-01	OBJECT AND TERMINAL MARKERS
782006-01	GUARDRAIL AND BARRIER WALL REFLECTOR MOUNTING DETAILS

LIST OF DISTRICT 5 STANDARDS

STANDARD NUMBER	DESCRIPTION
7800BBBB	PAVEMENT MARKING AND MARKERS (INTERSTATE & MULTILANE APPLICATIONS)
X032AAAA	REAL-TIME TRAFFIC CONTROL SYSTEM
X7200201	WIDTH RESTRICTION SIGNING
Z2700001	DETAIL FOR TEMPORARY RUMBLE STRIPS (SPECIAL)

GENERAL NOTES

G.N.-100B
MICROSTATION AND GEOPAK FILES OF THIS PROJECT WILL BE MADE AVAILABLE TO THE CONTRACTOR AFTER CONTRACT AWARD. IF THERE IS A CONFLICT BETWEEN THE ELECTRONIC FILES AND THE PRINTED CONTRACT PLANS AND DOCUMENTS, THE PRINTED CONTRACT PLANS AND DOCUMENTS SHALL TAKE PRECEDENCE OVER THE ELECTRONIC FILES. THE CONTRACTOR SHALL ACCEPT ALL RISK ASSOCIATED WITH USING THE ELECTRONIC FILES AND SHALL HOLD THE DEPARTMENT HARMLESS FOR ANY ERRORS OR OMISSIONS IN THE ELECTRONIC FILES AND THE DATA CONTAINED THEREIN. ERRORS OR DELAYS RESULTING FROM THE USE OF THE ELECTRONIC FILES BY THE CONTRACTOR SHALL NOT RESULT IN AN EXTENSION OF TIME FOR ANY INTERIM OR FINAL COMPLETION DATE OR SHALL NOT BE CONSIDERED CAUSE FOR ADDITIONAL COMPENSATION. THE CONTRACTOR SHALL NOT USE, SHARE, OR DISTRIBUTE THESE ELECTRONIC FILES EXCEPT FOR THE PURPOSE OF CONSTRUCTING THIS CONTRACT. ANY CLAIMS BY THIRD PARTIES DUE TO USE OR ERRORS SHALL BE THE SOLE RESPONSIBILITY OF THE CONTRACTOR. THE CONTRACTOR SHALL INCLUDE THIS DISCLAIMER WITH THE TRANSFER OF THESE ELECTRONIC FILES TO ANY OTHER PARTIES AND SHALL INCLUDE APPROPRIATE LANGUAGE BINDING THEM TO SIMILAR RESPONSIBILITIES.

G.N.-105.09A
ALL ELEVATIONS SHOWN IN THE PLANS ARE BASED ON NORTH AMERICAN VERTICAL DATUM OF 1988. (NAVD 88)

ALL WORK NECESSARY FOR THE PLACEMENT OF RIP RAP INCLUDING DEWATERING SHALL BE INCLUDED IN THE COST OF THE RIP RAP. REMOVAL AND DISPOSAL OF REGULATED SUBSTANCES WILL BE PAID SEPARATELY.

G.N.-201
TREES THAT INTERFERE WITH THE CONSTRUCTION OPERATIONS SHALL BE REMOVED AS DIRECTED BY THE ENGINEER. ANY TREE DUE TO ITS LOCATION AND DEEMED SUITABLE FOR SAVING BY THE ENGINEER SHALL BE PROTECTED DURING CLEARING AND SUBSEQUENT CONSTRUCTION OPERATIONS.

G.N.-406H
MIXTURE REQUIREMENTS:

THE FOLLOWING MIXTURE REQUIREMENTS ARE APPLICABLE FOR THIS PROJECT:

LOCATION(S):	I-74	I-74
MIXTURE USE(S):	SURFACE SHOULDER INLAY (3") & FULL DEPTH SHOULDER SURFACE (1.5")	BINDER SHOULDER (6.5")
AC/PG	PG 64-22	PG 64-22
DESIGN AIR VOIDS	4% @ 70 GYR.	4% @ 70 GYR.
MIXTURE COMP (GRADATION)	IL-9.5	IL-19.0
FRICTION AGGREGATE	MIX "D"	N/A
MIXTURE WEIGHT	112 LBS/SQYD/IN	112 LBS/SQYD/IN
QUALITY MANAGEMENT PROGRAM	QC/QA	QC/QA
SUBLOT SIZE	3000	3000
MATERIAL TRANSFER DEVICE (REQUIRED?)	NO	NO

G.N.-703A
SHORT TERM PAVEMENT MARKING SHALL BE APPLIED TO THE PAVEMENT AFTER ANY OF THE FOLLOWING: COLD MILLING AND/OR PLACING BITUMINOUS MATERIALS (TACK COAT), LEVELING BINDER (MACHINE METHOD), BINDER AND SURFACE COURSES, SHORT TERM PAVEMENT MARKING PLACED ON THE SURFACE SHALL COINCIDE WITH THE FINAL PAVEMENT STRIPING. SHORT TERM PAVEMENT MARKING PLACED PRIOR TO THE SURFACE SHALL COINCIDE WITH THE EXISTING PAVEMENT MARKINGS. USE 4 FEET PER 40 FEET (OR 10% PER STATION).

G.N.-781
THE FINAL PAVEMENT MARKINGS SHALL BE IN PLACE PRIOR TO PLACING THE RAISED REFLECTIVE PAVEMENT MARKERS.

COMMITMENTS

NO COMMITMENTS

SUMMARY OF QUANTITIES

CODE NO.	ITEM	UNIT	TOTAL QUANTITY	CONSTR. CODE FAI 74 VERMILLION COUNTY 90% FED/10% STATE BRIDGE 0010 RURAL
20100110	TREE REMOVAL (6 TO 15 UNITS DIAMETER)	UNIT	391	391
20100210	TREE REMOVAL (OVER 15 UNITS DIAMETER)	UNIT	184	184
20200100	EARTH EXCAVATION	CU YD	385	385
20300100	CHANNEL EXCAVATION	CU YD	2499	2499
25000210	SEEDING, CLASS 2A	ACRE	1	1
25000400	NITROGEN FERTILIZER NUTRIENT	POUND	90	90
25000500	PHOSPHORUS FERTILIZER NUTRIENT	POUND	90	90
25000600	POTASSIUM FERTILIZER NUTRIENT	POUND	90	90
25100630	EROSION CONTROL BLANKET	SQ YD	3795	3795
28000250	TEMPORARY EROSION CONTROL SEEDING	POUND	200	200
28000305	TEMPORARY DITCH CHECKS	FOOT	96	96
28000400	PERIMETER EROSION BARRIER	FOOT	807	807
28000510	INLET FILTERS	EACH	5	5
28001100	TEMPORARY EROSION CONTROL BLANKET	SQ YD	3795	3795

* DENOTES SPECIALTY ITEM

SUMMARY OF QUANTITIES

CODE NO.	ITEM	UNIT	TOTAL QUANTITY	CONSTR. CODE FAI 74 VERMILLION COUNTY 90% FED/10% STATE BRIDGE 0010 RURAL
28100107	STONE RIPRAP, CLASS A4	SQ YD	71	71
28100109	STONE RIPRAP, CLASS A5	SQ YD	3673	3673
28200200	FILTER FABRIC	SQ YD	3744	3744
31102400	SUBBASE GRANULAR MATERIAL, TYPE C 7"	SQ YD	1085	1085
40604062	HOT-MIX ASPHALT SURFACE COURSE, IL-9.5, MIX "D", N70	TON	403	403
42000080	PAVEMENT CONNECTOR (PCC) FOR BRIDGE APPROACH SLAB	SQ YD	463	463
44000100	PAVEMENT REMOVAL	SQ YD	318	318
44000161	HOT-MIX ASPHALT SURFACE REMOVAL, 3"	SQ YD	2748	2748
44004250	PAVED SHOULDER REMOVAL	SQ YD	870	870
48101500	AGGREGATE SHOULDERS, TYPE B 6"	SQ YD	1338	1338
48102100	AGGREGATE WEDGE SHOULDER, TYPE B	TON	21	21
48203029	HOT-MIX ASPHALT SHOULDERS, 8"	SQ YD	1009	1009
50100300	REMOVAL OF EXISTING STRUCTURES NO. 1	EACH	1	1
50100400	REMOVAL OF EXISTING STRUCTURES NO. 2	EACH	1	1

* DENOTES SPECIALTY ITEM

SUMMARY OF QUANTITIES

CODE NO.	ITEM	UNIT	TOTAL QUANTITY	CONSTR. CODE FAI 74 VERMILLION COUNTY 90% FED/10% STATE BRIDGE 0010 RURAL
50200100	STRUCTURE EXCAVATION	CU YD	520	520
50200300	COFFERDAM EXCAVATION	CU YD	675	675
50200400	ROCK EXCAVATION FOR STRUCTURES	CU YD	60	60
50201101	COFFERDAM (TYPE 1) (LOCATION - 1)	EACH	1	1
50201102	COFFERDAM (TYPE 1) (LOCATION - 2)	EACH	1	1
50201103	COFFERDAM (TYPE 1) (LOCATION - 3)	EACH	1	1
50201104	COFFERDAM (TYPE 1) (LOCATION - 4)	EACH	1	1
50300100	FLOOR DRAINS	EACH	40	40
50300225	CONCRETE STRUCTURES	CU YD	439.6	439.6
50300255	CONCRETE SUPERSTRUCTURE	CU YD	473.9	473.9
50300300	PROTECTIVE COAT	SQ YD	2402	2402
50301350	CONCRETE SUPERSTRUCTURE (APPROACH SLAB)	CU YD	236.8	236.8
50500105	FURNISHING AND ERECTING STRUCTURAL STEEL	L SUM	1	1
50500505	STUD SHEAR CONNECTORS	EACH	10404	10404

* DENOTES SPECIALTY ITEM

6/23/2025 10:27:07 AM
P:\Projects\22000\22351\C_DESIGN\01_Discipline\a_Civil\Working\Sheets\05_70D66_SOQ00.dgn

EPSTEIN

USER NAME = asharghi	DESIGNED - AS	REVISED -
	DRAWN - AS	REVISED -
PLOT SCALE = 100.000 ' / in.	CHECKED - JRK	REVISED -
PLOT DATE = 6/23/2025	DATE - 05/01/2025	REVISED -

STATE OF ILLINOIS
DIVISION OF TRANSPORTATION

SUMMARY OF QUANTITIES

SCALE: | SHEET 3 OF 8 SHEETS | STA. TO STA.

F.A.I. RTE.	SECTION	COUNTY	TOTAL SHEETS	SHEET NO.
74	(92-9)BR	VERMILION	87	5

CONTRACT NO. 70D66

ILLINOIS | FED. AID PROJECT

SUMMARY OF QUANTITIES

CODE NO.	ITEM	UNIT	TOTAL QUANTITY	CONSTR. CODE FAI 74 VERMILLION COUNTY 90% FED/10% STATE BRIDGE 0010 RURAL
50800205	REINFORCEMENT BARS, EPOXY COATED	POUND	280560	280560
50800515	BAR SPLICERS	EACH	2024	2024
51201610	FURNISHING STEEL PILES HP12X63	FOOT	904	904
51201800	FURNISHING STEEL PILES HP14X73	FOOT	710	710
51202305	DRIVING PILES	FOOT	904	904
51203610	TEST PILE STEEL HP12X63	EACH	2	2
51265001	DRILLING AND SETTING PILES (IN SOIL)	CU FT	491	491
51265002	DRILLING AND SETTING PILES (IN ROCK)	CU FT	547	547
51500100	NAME PLATES	EACH	2	2
52100520	ANCHOR BOLTS, 1"	EACH	96	96
52200010	TEMPORARY SHEET PILING	SQ FT	4464	4464
58600101	GRANULAR BACKFILL FOR STRUCTURES	CU YD	276	276
59100100	GEOCOMPOSITE WALL DRAIN	SQ YD	134	134
60100060	CONCRETE HEADWALLS FOR PIPE DRAINS	EACH	6	6

* DENOTES SPECIALTY ITEM

SUMMARY OF QUANTITIES

	CODE NO.	ITEM	UNIT	TOTAL QUANTITY	CONSTR. CODE FAI 74 VERMILLION COUNTY 90% FED/10% STATE BRIDGE 0010 RURAL
	60108100	PIPE UNDERDRAINS 4" (SPECIAL)	FOOT	108	108
	60108501	PIPE UNDERDRAINS, TYPE3	FOOT	1477	1477
	60146304	PIPE UNDERDRAINS FOR STRUCTURES 4"	FOOT	382	382
*	63000001	STEEL PLATE BEAM GUARDRAIL, TYPE A, 6 FOOT POSTS	FOOT	1200	1200
*	63100085	TRAFFIC BARRIER TERMINAL, TYPE 6	EACH	4	4
*	63100167	TRAFFIC BARRIER TERMINAL, TYPE 1 (SPECIAL) TANGENT	EACH	4	4
	63200310	GUARDRAIL REMOVAL	FOOT	1581	1581
	64200116	SHOULDER RUMBLE STRIPS, 16 INCH	FOOT	3060	3060
	66500105	WOVEN WIRE FENCE, 4'	FOOT	174	174
	67000500	ENGINEER'S FIELD OFFICE, TYPE B	CAL MO	18	18
	67100100	MOBILIZATION	L SUM	1	1
	70100205	TRAFFIC CONTROL AND PROTECTION, STANDARD 701401	EACH	2	2
	70100207	TRAFFIC CONTROL AND PROTECTION, STANDARD 701402	EACH	2	2
	70103815	TRAFFIC CONTROL SURVEILLANCE	CAL DA	72	72

* DENOTES SPECIALTY ITEM

SUMMARY OF QUANTITIES

	CODE NO.	ITEM	UNIT	TOTAL QUANTITY	CONSTR. CODE FAI 74 VERMILLION COUNTY 90% FED/10% STATE BRIDGE 0010 RURAL
	70106700	TEMPORARY RUMBLE STRIPS	EACH	16	16
	70107025	CHANGEABLE MESSAGE SIGN	CAL DA	28	28
	70300150	SHORT TERM PAVEMENT MARKING REMOVAL	SQ FT	4555	4555
	70300221	TEMPORARY PAVEMENT MARKING - LINE 4" - PAINT	FOOT	7201	7201
	70307120	TEMPORARY PAVEMENT MARKING - LINE 4" - TYPE IV TAPE	FOOT	13665	13665
	70400100	TEMPORARY CONCRETE BARRIER	FOOT	937.5	937.5
	70400125	PINNING TEMPORARY CONCRETE BARRIER	EACH	87	87
	70400200	RELOCATE TEMPORARY CONCRETE BARRIER	FOOT	912.5	912.5
	70600251	IMPACT ATTENUATORS, TEMPORARY (NON- REDIRECTIVE, NARROW), TEST LEVEL 3	EACH	2	2
	70600352	IMPACT ATTENUATORS, RELOCATE (NON- REDIRECTIVE, NARROW), TEST LEVEL 3	EACH	2	2
*	72501000	TERMINAL MARKER - DIRECT APPLIED	EACH	4	4
*	78000400	THERMOPLASTIC PAVEMENT MARKING - LINE 6"	FOOT	6181	6181
*	78008330	POLYUREA PAVEMENT MARKING TYPE II - LINE 6"	FOOT	1020	1020
*	78011035	GROOVING FOR RECESSED PAVEMENT MARKING 7"	FOOT	7201	7201

* DENOTES SPECIALTY ITEM

6/23/2025 10:27:12 AM
P:\Projects\22000\22351\C_DESIGN\01_Discipline\a_Civil\Working\Sheets\05_70D66_SCO06.dgn

SUMMARY OF QUANTITIES

	CODE NO.	ITEM	UNIT	TOTAL QUANTITY	CONSTR. CODE FAI 74 VERMILLION COUNTY 90% FED/10% STATE BRIDGE 0010 RURAL
*	78200005	GUARDRAIL REFLECTORS, TYPE A	EACH	20	20
*	78200011	BARRIER WALL REFLECTORS, TYPE C	EACH	70	70
	78300201	PAVEMENT MARKING REMOVAL - GRINDING	SQ FT	1118	1118
	X5030250	BRIDGE DECK GROOVING (LONGITUDINAL)	SQ YD	1209	1209
	X5080530	BAR TERMINATORS	EACH	1052	1052
	X6640104	FENCE REMOVAL	FOOT	174	174
*	X7011854	REAL-TIME TRAFFIC CONTROL CENTRAL BASE UNIT	CAL MO	18	18
*	X7011860	REAL-TIME TRAFFIC CONTROL WARNING SIGN	CAL MO	144	144
*	X7011862	REAL-TIME TRAFFIC MONITORING SENSOR UNIT	CAL MO	288	288
	X7200201	WIDTH RESTRICTION SIGNING	L SUM	1	1
	Z0004552	APPROACH SLAB REMOVAL	SQ YD	542	542
	Z0013798	CONSTRUCTION LAYOUT	L SUM	1	1
	Z0023201	SEDIMENT CONTROL, SILT CURTAIN	EACH	1	1
	Z0029090	DIAMOND GRINDING (BRIDGE SECTION)	SQ YD	1829	1829

* DENOTES SPECIALTY ITEM

SUMMARY OF QUANTITIES

	CODE NO.	ITEM	UNIT	TOTAL QUANTITY	CONSTR. CODE FAI 74 VERMILLION COUNTY 90% FED/10% STATE BRIDGE 0010 RURAL
*	Z0038700	PERMANENT BENCH MARKS	EACH	2	2
	Z0040530	PIPE UNDERDRAIN REMOVAL	FOOT	1477	1477
Ø	Z0076600	TRAINEES	HOUR	500	500
Ø	Z0076604	TRAINEES - TRAINING PROGRAM GRADUATE	HOUR	500	500

* DENOTES SPECIALTY ITEM

Ø 0042

EPSTEIN

USER NAME = asharghi	DESIGNED - AS	REVISED -
	DRAWN - AS	REVISED -
PLOT SCALE = 100.000 ' / in.	CHECKED - JRK	REVISED -
PLOT DATE = 6/23/2025	DATE - 05/01/2025	REVISED -

STATE OF ILLINOIS
DIVISION OF TRANSPORTATION

SUMMARY OF QUANTITIES

SCALE: | SHEET 8 OF 8 SHEETS | STA. TO STA.

F.A.I. RTE.	SECTION	COUNTY	TOTAL SHEETS	SHEET NO.
74	(92-9)BR	VERMILION	87	10

CONTRACT NO. 70D66

ILLINOIS | FED. AID PROJECT

6/23/2025 10:27:15 AM
P:\Projects\2200\22317C_DESIGN\01_Disciplines_Civil\Working\Sheets\D5_70D66_SOQ06.dgn

REV. 7/28/25REV. 7/7/25

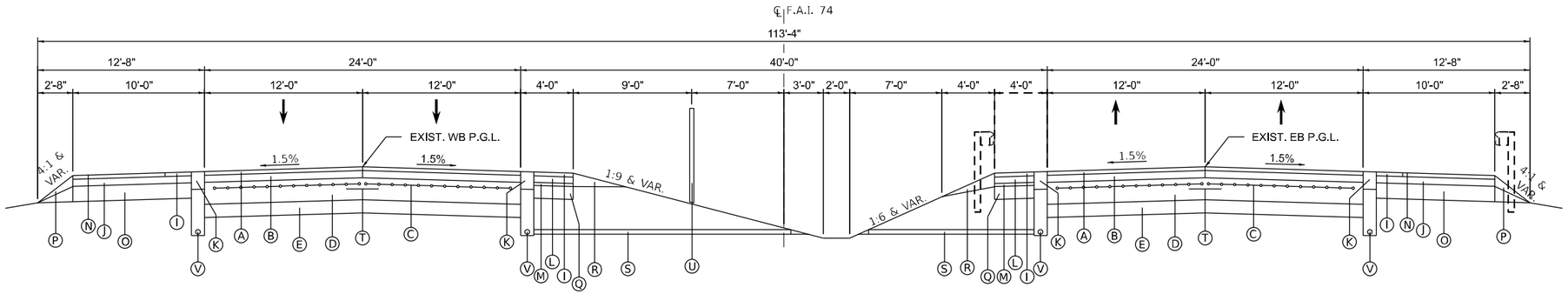

EXISTING TYPICAL SECTION

I-74
EB STA 1279+00.0 TO STA 1285+24.0
WB STA 1279+00.0 TO STA 1285+41.0
(LOOKING EAST)
EB START STATION 1279+37.0
WB START STATION 1281+22.0

LEGEND:

- Ⓐ EXISTING HMA SURFACE COURSE, 1.75"
- Ⓑ EXISTING HMA BINDER, 3.25"
- Ⓒ EXISTING PAVEMENT FABRIC
- Ⓓ EXISTING PCC PAVEMENT, 10"
- Ⓔ EXISTING SUBBASE GRANULAR MATERIAL, 6"
- Ⓘ EXISTING HMA SHOULDERS, 1.75"
- Ⓙ EXISTING HMA SHOULDERS, 3.25"
- Ⓚ EXISTING HMA SHOULDERS, 8"
- Ⓛ EXISTING HMA SHOULDERS, 3"
- Ⓜ EXISTING HMA SHOULDERS, 1.5"
- Ⓝ EXISTING SHOULDER SEAL COAT
- Ⓞ EXISTING AGGREGATE SHOULDERS, 7"
- Ⓟ EXISTING AGGREGATE SHOULDERS, TYPE B
- Ⓠ EXISTING GRAVEL OR CRUSHED STONE SHOULDER, 8.5"
- Ⓡ EXISTING AGGREGATE SHOULDERS, WEDGE
- Ⓢ EXISTING PIPE UNDERDRAIN W/ CONCRETE HEADWALL
- Ⓣ EXISTING TIE BARS #5
- Ⓤ EXISTING CABLE MEDIAN BARRIER
- Ⓥ EXISTING PIPE UNDERDRAIN

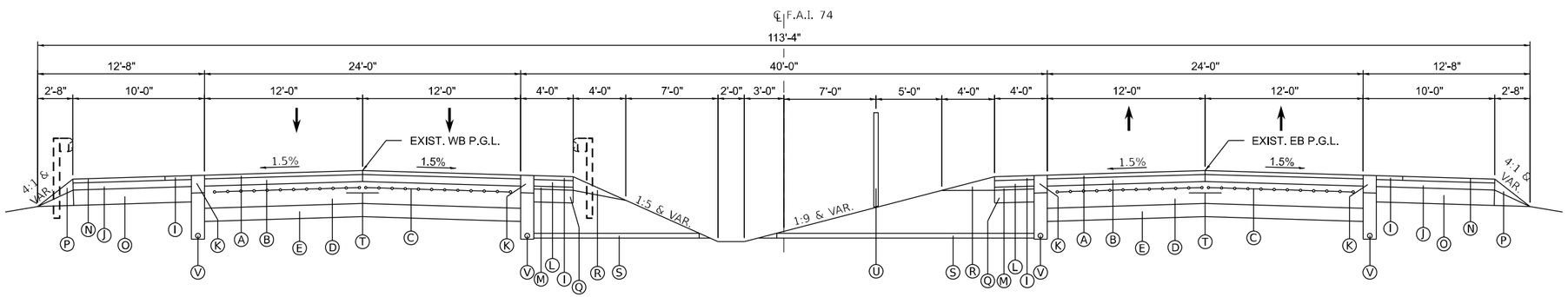

EXISTING TYPICAL SECTION

I-74
EB STA 1286+93.0 TO STA 1293+00.0
WB STA 1287+10.0 TO STA 1293+00.0
(LOOKING EAST)
EB END STATION 1291+15.0
WB END STATION 1292+63.0

EPSTEIN	USER NAME = asharghi	DESIGNED - AS	REVISED -	STATE OF ILLINOIS DIVISION OF TRANSPORTATION	I-74 OVER STONY CREEK EXISTING TYPICAL SECTIONS	F.A.I. RTE.	SECTION	COUNTY	TOTAL SHEETS / SHEET NO.
		DRAWN - AS	REVISED -			74	(92-9)BR	VERMILION	87 / 11
	PLOT SCALE = 10.000 ' / in.	CHECKED - JRK	REVISED -					CONTRACT NO. 70D66	
	PLOT DATE = 6/23/2025	DATE - 05/01/2025	REVISED -		SCALE: SHEET 1 OF 2 SHEETS STA. TO STA.		ILLINOIS	FED. AID PROJECT	

6/23/2025 10:27:16 AM
P:\Projects\22000\22351C_DESIGN\01_Design\Illinois_Civil\Working\Sheets\D5_70D66_Typ01.dgn,dgn

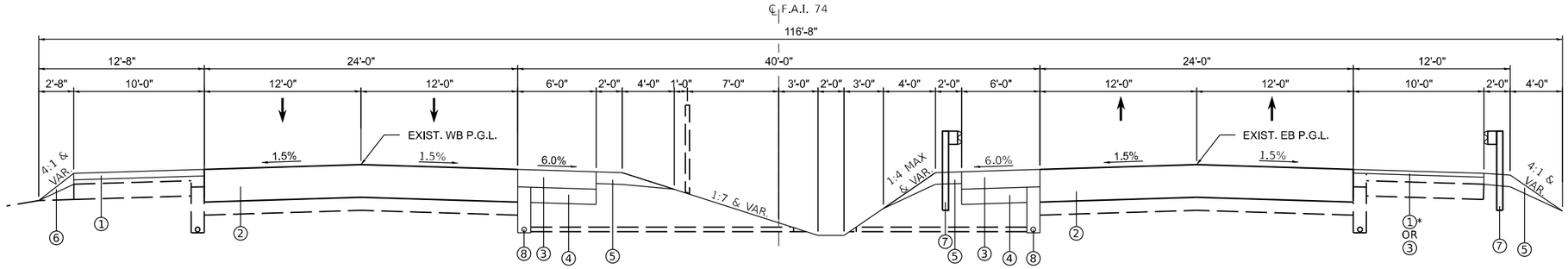

PROPOSED TYPICAL SECTION

I-74
EB STA 1279+00.0 TO STA 1285+24.0
WB STA 1279+00.0 TO STA 1285+41.0
(LOOKING EAST)
EB START STATION 1279+37.0
WB START STATION 1281+22.0

* OUTSIDE SHOULDER SURFACE REMOVAL
STA. 1281+00 TO STA. 1283+19 RT
OUTSIDE FULL DEPTH SHOULDER REPLACEMENT
STA. 1283+19 TO STA. 1284+88 RT

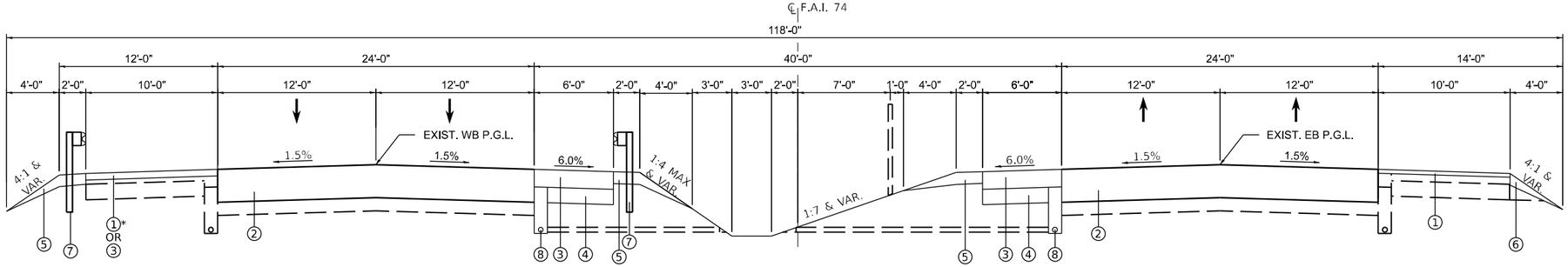

PROPOSED TYPICAL SECTION

I-74
EB STA 1286+93.0 TO STA 1293+00.0
WB STA 1287+10.0 TO STA 1293+00.0
(LOOKING EAST)
EB END STATION 1291+15.0
WB END STATION 1292+63.0
* OUTSIDE FULL DEPTH SHOULDER REPLACEMENT
STA. 1287+39 TO STA. 1288+48 LT
OUTSIDE SHOULDER SURFACE REMOVAL
STA. 1288+48 TO STA. 1291+00 LT

LEGEND:

1. HMA SURFACE COURSE, IL-9.5, MIX "D", N70, 336 LBS/SQYD
2. PAVEMENT CONNECTOR (PCC) FOR BRIDGE APPROACH SLAB
3. HMA SHOULDER, 8"
4. SUBBASE GRANULAR MATERIAL, TYPE C 7"
5. AGGREGATE SHOULDER, TYPE B, 6"
6. AGGREGATE WEDGE SHOULDER, TYPE B
7. STEEL PLATE BEAM GUARDRAIL, TYPE A, 6 FOOT POSTS
8. PIPE UNDERDRAINS, TYPE 1, 4"

6/24/2025 11:41:39 AM
P:\Projects\2200\22301C_DESIGN\01_Discipline\a_Civil\Working\Sheets\D5_76D66_Typ02.dgn\dgn

EPSTEIN	USER NAME = asharghi	DESIGNED - AS	REVISED -	STATE OF ILLINOIS DIVISION OF TRANSPORTATION	I-74 OVER STONY CREEK PROPOSED TYPICAL SECTIONS
		DRAWN - AS	REVISED -		
	PLOT SCALE = 10.000 ' / in.	CHECKED - JRK	REVISED -		
	PLOT DATE = 6/24/2025	DATE - 05/01/2025	REVISED -		SCALE: SHEET 2 OF 2 SHEETS STA. TO STA.

F.A.I. RTE.	SECTION	COUNTY	TOTAL SHEETS	SHEET NO.
74	(92-9)BR	VERMILION	87	12
		CONTRACT NO. 70D66		
	ILLINOIS	FED. AID PROJECT		

PAVING SCHEDULE

LOCATION			SUBBASE GRANULAR MATERIAL, TYPE C 7" 31102400	HOT-MIX ASPHALT SURFACE COURSE, IL-9.5, MIX "D", N70 40604062	PAVEMENT CONNECTOR (PCC) FOR BRIDGE APPROACH SLAB 42000080	AGGREGATE SHOULDERS, TYPE B 6" 48101500	AGGREGATE WEDGE SHOULDER, TYPE B 48102100	HOT-MIX ASPHALT SHOULDERS, 8" 48203029
STATION TO STATION	ROADWAY	OFFSET	(SQ YD)	(TON)	(SQ YD)	(SQ YD)	(TON)	(SQ YD)
1279+37 TO 1284+95	I-74 EB	18' RT		42				
1280+90 TO 1284+50	I-74 EB	14' RT	260					240
1280+90 TO 1285+13	I-74 EB	12' RT				282		
1280+00 TO 1283+19	I-74 EB	44' RT		60				
1281+00 TO 1284+66	I-74 EB	54' RT				244		
1281+23 TO 1285+04	I-74 WB	18' LT		28				
1282+80 TO 1284+94	I-74 WB	14' LT	155					143
1282+80 TO 1285+21	I-74 WB	8' LT				161		
1281+90 TO 1284+94	I-74 WB	44' LT		57				
1282+90 TO 1285+12	I-74 WB	54' LT					8	
1283+19 TO 1284+50	I-74 EB	44' RT	153					146
1284+30 TO 1284+50	I-74 EB	30' RT		9				
1284+50 TO 1284+95	I-74 EB	17' RT			181			
1284+74 TO 1284+94	I-74 WB	30' LT		9				
1284+93 TO 1285+05	I-74 EB	18' RT		3				
1284+94 TO 1285+12	I-74 WB	16' LT			69			
1287+00 TO 1287+18	I-74 EB	18' RT		4				
1287+07 TO 1289+50	I-74 EB	12' RT				162		
1287+13 TO 1289+40	I-74 EB	54' RT					13	
1287+14 TO 1287+30	I-74 WB	18' LT		4				
1287+14 TO 1287+50	I-74 EB	16' RT			145			
1287+14 TO 1291+10	I-74 WB	12' LT				264		
1287+22 TO 1291+15	I-74 EB	18' RT		29				
1287+30 TO 1287+51	I-74 WB	15' LT			68			
1287+31 TO 1292+63	I-74 WB	18' LT		40				
1287+50 TO 1289+50	I-74 EB	14' RT	144					133
1287+50 TO 1289+40	I-74 EB	15' RT		36				
1287+50 TO 1287+70	I-74 EB	30' RT		9				
1287+51 TO 1287+71	I-74 WB	30' LT		9				
1287+51 TO 1291+10	I-74 WB	14' LT	260					239
1287+51 TO 1288+48	I-74 WB	43' LT	113					108
1287+62 TO 1291+00	I-74 WB	54' LT				225		
1288+48 TO 1292+00	I-74 WB	15' LT		66				
		I-74 TOTAL	1085	405	463	1338	21	1009

REMOVAL SCHEDULE

LOCATION			PAVEMENT REMOVAL 44000100	HOT-MIX ASPHALT SURFACE REMOVAL, 3" 44000161	PAVED SHOULDER REMOVAL 44004250
STATION TO STATION	ROADWAY	OFFSET	(SQ YD)	(SQ YD)	(SQ YD)
1278+37 TO 1284+95	I-74 EB	18' RT		292	
1280+00 TO 1283+19	I-74 EB	44' RT		354	
1281+00 TO 1284+95	I-74 EB	16' RT			176
1280+22 TO 1285+04	I-74 WB	18' LT		214	
1281+90 TO 1285+13	I-74 WB	44' LT		359	
1282+90 TO 1285+13	I-74 WB	16' LT			99
1283+19 TO 1284+95	I-74 EB	44' RT			196
1284+30 TO 1284+50	I-74 EB	30' RT		53	
1284+50 TO 1284+95	I-74 EB	20' RT	120		
1284+74 TO 1284+94	I-74 WB	30' RT		53	
1284+91	I-74	88' RT			
1284+93 TO 1285+05	I-74 EB	16' LT		16	
1284+94 TO 1285+13	I-74 WB	20' LT	51		
1285+26	I-74	84' LT			
1286+98	I-74	90' RT			
1287+00 TO 1287+18	I-74 EB	15' RT		24	
1287+14 TO 1290+40	I-74 EB	15' RT		362	
1287+14 TO 1289+40	I-74 EB	16' RT			100
1287+14 TO 1287+30	I-74 WB	16' RT		21	
1287+14 TO 1287+50	I-74 EB	20' RT	96		
1287+20 TO 1291+00	I-74 WB	16' LT			169
1287+22 TO 1292+15	I-74 EB	18' RT		219	
1287+31 TO 1288+48	I-74 WB	15' LT			130
1287+31 TO 1293+63	I-74 WB	18' LT		281	
1287+32 TO 1287+51	I-74 WB	20' LT	51		
1287+38	I-74	89' LT			
1287+50 TO 1287+70	I-74 EB	30' RT		53	
1287+51 TO 1287+71	I-74 WB	30' LT		53	
1288+48 TO 1292+00	I-74 WB	15' LT		391	
		I-74 TOTAL	318	2745	870

FENCE REMOVAL AND REPLACEMENT SCHEDULE

LOCATION			WOVEN WIRE FENCE, 4' 66500105	FENCE REMOVAL X6640104
STATION TO STATION	ROADWAY	OFFSET	(FOOT)	(FOOT)
1284+91	I-74	88' RT	48	48
1285+26	I-74	84' LT	36	36
1286+98	I-74	90' RT	42	42
1287+38	I-74	89' LT	48	48
		I-74 TOTAL	174	174

EARTHWORK SCHEDULE

LOCATION		EARTH EXCAVATION			
		20200100			
STATION TO STATION	ROADWAY	CUT (CU YD)	FILL (CU YD)	ADJ FILL (CU YD)	BALANCE (CU YD)
1281+00	I-74	6.1	0	0	6.1
1281+50	I-74	12.9	0	0	12.9
1282+00	I-74	12.6	0	0	12.6
1282+50	I-74	11.9	0	0	11.9
1283+00	I-74	17.8	0	0	17.8
1283+50	I-74	32.0	0	0	32.0
1284+00	I-74	41.0	0	0	41.0
1284+50	I-74	41.8	0	0	41.8
1285+00	I-74	40.3	0	0	40.3
1288+00	I-74	44.2	0	0	44.2
1288+50	I-74	35.8	0	0	35.8
1289+00	I-74	26.4	0	0	26.4
1289+50	I-74	18.8	0	0	18.8
1290+00	I-74	11.7	0	0	11.7
1290+50	I-74	12.2	0	0	12.2
1291+00	I-74	12.6	0	0	12.6
1291+50	I-74	6.2	0	0	6.2
	I-74 TOTAL	385	0	0	385

PIPE UNDERDRAIN SCHEDULE

LOCATION			CONCRETE HEADWALLS FOR PIPE DRAINS	PIPE UNDERDRAINS 4" (SPECIAL)	PIPE UNDERDRAINS, TYPE 3	PIPE UNDERDRAINS FOR STRUCTURES 4"	PIPE UNDERDRAIN REMOVAL
			60100060	60108100	60108501	60146304	Z0040530
STATION TO STATION	ROADWAY	OFFSET	(EACH)	(FOOT)	(FOOT)	(FOOT)	(FOOT)
1281+00 TO 1284+96	I-74	16' RT			396		396
1282+90 TO 1285+04	I-74	16' LT			214		214
1283+19 TO 1284+88	I-74	44' RT			169		169
1284+88	I-74	44' RT		44			
1284+94	I-74	16' LT		12			
1284+96	I-74	118' RT	1				
1285+28	I-74	1' RT				121	
1285+28	I-74	1' LT				121	
1285+61	I-74	117' LT	1				
1286+81	I-74	71' RT	1				
1287+00	I-74	1' RT				70	
1287+00	I-74	1' LT				70	
1287+18	I-74	67' LT	1				
1287+22 TO 1289+40	I-74	16' RT			218		218
1287+30 TO 1291+00	I-74	16' LT			370		370
1287+38 TO 1288+48	I-74	44' LT			110		110
1288+47	I-74	7' LT	1				
1288+48	I-74	44' LT		37			
1289+40	I-74	16' RT		15			
1289+40	I-74	2' RT	1				
		I-74 TOTAL	6	108	1477	382	1477

EROSION CONTROL SCHEDULE

LOCATION			SEEDING, CLASS 2A	EROSION CONTROL BLANKET	TEMPORARY DITCH CHECKS	PERIMETER EROSION BARRIER	INLET FILTERS	TEMPORARY EROSION CONTROL BLANKET
			25000210	25100630	28000305	28000400	28000510	28001100
STATION TO STATION	ROADWAY	OFFSET	(ACRE)	(SQ YD)	(FOOT)	(FOOT)	(EACH)	(SQ YD)
1280+90 TO 1285+37	I-74	2' RT	0.25	1,200				1,200
1281+08 TO 1281+67	I-74	54' RT	0.02	83.00				83
1282+10	I-74	10' RT			8			
1282+39	I-74	4' RT			8			
1283+39	I-74	1' RT			8			
1283+72	I-74	5' LT					1	
1284+47 TO 1285+76	I-74	54' RT	0.12	583				583
1284+54 TO 1286+17	I-74	54' LT	0.11	549				549
1284+82	I-74	0' RT			8			
1284+80 TO 1285+06	I-74	118' RT				444		
1284+95	I-74	1' RT					1	
1285+51	I-74	125' RT			8			
1286+00	I-74	95' LT			8			
1286+24	I-74	76' RT			8			
1286+57	I-74	71' LT			8			
1286+89 TO 1287+75	I-74	54' LT	0.02	78				79
1287+04 TO 1287+27	I-74	0' RT	0.01	49				49
1287+05	I-74	70' LT			8			
1287+22 TO 1287+38	I-74	56' LT	0.004	19				19
1287+45 TO 1287+42	I-74	76' RT				363		
1287+48 TO 1287+60	I-74	56' LT	0.001	4				4
1287+29 TO 1291+44	I-74	0' RT	0.22	1044				1043
1287+60	I-74	4' LT			8			
1288+66	I-74	3' LT			8			
1289+53	I-74	5' LT			8			
1289+82	I-74	4' LT					1	
1289+96	I-74	4' LT					1	
1290+11	I-74	4' LT					1	
1290+28 TO 1291+38	I-74	54' LT	0.04	186				186
		I-74 TOTAL	0.795	3795	96	807	5	3795

SEEDING SCHEDULE

LOCATION		NITROGEN FERTILIZER NUTRIENT	PHOSPHORUS FERTILIZER NUTRIENT	POTASSIUM FERTILIZER NUTRIENT	TEMPORARY EROSION CONTROL SEEDING
		25000400	25000500	25000600	28000250
		90 LBS/ACRE	90 LBS/ACRE	90 LBS/ACRE	100 LBS/ACRE
ROADWAY	SEEDING AREA (ACRE)	(POUND)	(POUND)	(POUND)	(POUND)
I-74	1.0	90	90	90	100
	SECOND APPLICATION				100
	I-74 TOTAL	90	90	90	200

PAVEMENT MARKING SCHEDULE

LOCATION			SHOULDER RUMBLE, STRIPS, 16 INCH	THERMOPLASTIC PAVEMENT MARKING - LINE 6"	POLYUREA PAVEMENT MARKING TYPE II - LINE 6"	GROOVING FOR RECESSED PAVEMENT MARKING 7"	PAVEMENT MARKING REMOVAL - GRINDING
			64200116	78000400	78008330	78011035	78300201
STATION TO STATION	ROADWAY	OFFSET	(FOOT)	(FOOT)	(FOOT)	(FOOT)	(SQ FT)
1278+00 TO 1284+50	I-74 EB	44' RT		650		650	
1278+00 TO 1284+50	I-74 EB	20' RT		650		650	
1278+00 TO 1284+50	I-74 EB	32' RT		163		163	
1278+00 TO 1284+94	I-74 WB	44' LT		694		694	
1278+00 TO 1284+94	I-74 WB	20' LT		694		694	
1278+00 TO 1284+94	I-74 WB	32' LT		174		174	
1279+37 TO 1284+95	I-74 EB	18' RT	558				
1280+90 TO 1285+00	I-74 WB	44' LT					137
1280+90 TO 1285+00	I-74 WB	20' LT					34
1280+90 TO 1285+00	I-74 WB	32' LT					137
1280+90 TO 1284+50	I-74 EB	44' RT					120
1280+90 TO 1284+50	I-74 EB	20' RT					30
1280+90 TO 1284+50	I-74 EB	32' RT					120
1281+00 TO 1284+88	I-74 EB	46' RT	388				
1281+24 TO 1285+04	I-74 WB	18' LT	380				
1282+90 TO 1285+12	I-74 WB	46' LT	222				
1284+50 TO 1287+50	I-74 EB	44' RT			300	300	
1284+50 TO 1287+50	I-74 EB	32' RT			75	75	
1284+50TO 1287+50	I-74 EB	20' RT			300	300	
1284+94 TO 1287+51	I-74 WB	20' LT			257	257	
1284+94 TO 1287+51	I-74 WB	32' LT			64	64	
1284+94 TO 1287+51	I-74 WB	44' LT			257	257	
1287+14 TO 1289+40	I-74 EB	46' RT	226				
1287+50 TO 1294+00	I-74 EB	44' RT		650		650	
1287+50 TO 1294+00	I-74 EB	20' RT		163		163	
1287+50 TO 1294+00	I-74 EB	32' RT		650		650	
1287+22 TO 1291+15	I-74 EB	18' RT	393				
1287+31 TO 1292+63	I-74 WB	18' LT	532				
1287+51 TO 1294+00	I-74 WB	20' LT		649		649	
1287+51 TO 1294+00	I-74 WB	32' LT		162		162	
1287+51 TO 1294+00	I-74 WB	44' LT		649		649	
1287+39 TO 1291+00	I-74 WB	46' LT	361				
1287+50 TO 1291+10	I-74 WB	44' LT					120
1287+50 TO 1291+10	I-74 WB	20' LT					30
1287+50 TO 1291+10	I-74 WB	32' LT					120
1287+50 TO 1291+10	I-74 EB	44' RT					120
1287+50 TO 1291+10	I-74 EB	20' RT					30
1287+50 TO 1291+10	I-74 EB	32' RT					120
		I-74 TOTAL	3060	5947	1254	7201	1118

MAINTENANCE OF TRAFFIC SCHEDULE

LOCATION			SHORT TERM PAVEMENT MARKING REMOVAL	TEMPORARY PAVEMENT MARKING - LINE 4" - PAINT	TEMPORARY PAVEMENT MARKING - LINE 4" - TYPE IV TAPE	TEMPORARY CONCRETE BARRIER	PINNING TEMPORARY COCNRETE BARRIER	RELOCATE TEMPORARY CONCRETE BARRIER	IMPACT ATTENUATORS, TEMPORARY (NON-REDIRECTIVE, NARROW), TEST LEVEL 3	IMPACT ATTENUATORS, RELOCATE (NON-REDIRECTIVE, NARROW), TEST LEVEL 3	BARRIER WALL RELECTORS, TYPE C
			70300150	70300221	70307120	70400100	70400125	70400200	70600251	70600352	78200011
STATION TO STATION	ROADWAY	OFFSET	(SQ FT)	(FOOT)	(FOOT)	(FOOT)	(EACH)	(FOOT)	(EACH)	(EACH)	(EACH)
1264+37 TO 1289+40	I-74 EB STAGE 1	29' RT	834.3		2503						
1266+30 TO 1289+50	I-74 EB STAGE 2	40' RT	773.3		2320						
1278+87 TO 1290+30	I-74 WB STAGE 2	52' LT	381.0		1143						
1280+07 TO 1291+15	I-74 EB STAGE 1	18' RT	369.3		1108						
1281+22 TO 1292+43	I-74 WB STAGE 1	18' LT	373.7		1121						
1281+30 TO 1293+37	I-74 EB STAGE 2	52' RT	402.3		1207						
1282+62	I-74 EB STAGE 1	44' RT							1		
1282+62 TO 1287+50	I-74 EB STAGE 1	44' RT				487.5	48				20
1282+90 TO 1307+63	I-74 WB STAGE 1	29' LT	824.3		2473						
1284+88 TO 1289+37	I-74 WB STAGE 1	44' LT				450	39				18
1285+03 TO 1286+94	I-74 EB	55' RT									8
1285+14 TO 1287+05	I-74 EB	13' RT									8
1285+21 TO 1287+12	I-74 WB	13' LT									8
1285+32 TO 1287+23	I-74 WB	55' LT									8
1287+80 TO 1305+70	I-74 WB STAGE 2	40' LT	596.7		1790						
1289+37	I-74 WB STAGE 2	44' LT							1		
1282+75	I-74 EB STAGE 2	27' RT								1	
1282+75 TO 1287+50	I-74 EB STAGE 2	37' RT						475			
1284+85 TO 1289+25	I-74 WB STAGE 2	37' LT						437.5			
1289+25	I-74 WB STAGE 2	27' LT								1	
WINTER SHUTDOWN	I-74			7201							
		I-74 TOTAL	4555	7201	13665	937.5	87	912.5	2	2	70

GUARDRAIL SCHEDULE

LOCATION			STEEL PLATE BEAM GUARDRAIL, TYPE A, 6 FOOT POSTS	TRAFFIC BARRIER TERMINAL, TYPE 6	TRAFFIC BARRIER TERMINAL, TYPE 1 (SPECIAL) TANGENT	GUARDRAIL REMOVAL	TERMINAL MARKER - DIRECT APPLIED	GUARDRAIL REFLECTORS, TYPE A
			63000001	63100085	63100167	63200310	72501000	78200005
STATION TO STATION	ROADWAY	OFFSET	(FOOT)	(EACH)	(EACH)	(FOOT)	(EACH)	(EACH)
1281+04 TO 1285+22	I-74 EB	55' RT				418		
1281+40	I-74 EB	14' RT					1	
1281+40 TO 1281+77	I-74 EB	14' RT			1			1
1281+42	I-74 EB	55' RT					1	
1281+42 TO 1281+80	I-74 EB	55' RT			1			1
1281+63 TO 1285+33	I-74 EB	14' RT				370		
1281+77 TO 1284+77	I-74 EB	14' RT	300					3
1281+80 TO 1284+66	I-74 EB	55' RT	287.5					3
1284+66 TO 1285+03	I-74 EB	14' RT		1				1
1284+77 TO 1285+14	I-74 EB	55' RT		1				1
1286+93 TO 1291+14	I-74 WB	14' LT				421		
1287+00 TO 1290+72	I-74 WB	54' LT				372		
1287+12 TO 1287+51	I-74 WB	14' LT		1				1
1287+23 TO 1287+62	I-74 WB	54' LT		1				1
1287+51 TO 1290+72	I-74 WB	14' LT	325					3
1287+62 TO 1290+50	I-74 WB	54' LT	287.5					3
1290+50 TO 1290+87	I-74 WB	14' LT			1			1
1290+87	I-74 WB	14' LT					1	
1290+72 TO 1291+10	I-74 WB	54' LT			1			1
1291+10	I-74 WB	54' LT					1	
		I-74 TOTAL	1200	4	4	1581	4	20

EPSTEIN

USER NAME = asharghi	DESIGNED - AS	REVISED -
	DRAWN - AS	REVISED -
PLOT SCALE = 100.000 ' / in.	CHECKED - JRK	REVISED -
PLOT DATE = 6/23/2025	DATE - 05/01/2025	REVISED -

STATE OF ILLINOIS
DIVISION OF TRANSPORTATION

I-74 OVER STONY CREEK
SCHEDULE OF QUANTITIES

SCALE: SHEET OF SHEETS STA. TO STA.

F.A.I. RTE.	SECTION	COUNTY	TOTAL SHEETS	SHEET NO.
74	(92-9)BR	VERMILION	87	15

CONTRACT NO. 70D66

ILLINOIS FED. AID PROJECT

6/23/2025 10:27:21 AM
P:\Projects\22000\22331C_DESIGN\01_Disciplines\a_Civil\Working\Sheets\D5_70D66_Sched\sch03.dgn

CONTROL POINT DATA

POINT #	STATION	NORTHING	EASTING
400	1280+99.87	1259393.842	1116873.246
401	1284+25.15	1259513.863	1117196.104
402	1287+25.61	1259518.029	1117496.545
403	1287+22.46	1259623.451	1117491.211
404	1285+00.94	1259617.318	1117269.766

I–74 CENTERLINE

	STATION	NORTHING	EASTING
POT	1224+63.88	1259440.466	1111235.076
POT	1353+43.86	1259707.697	1124112.288

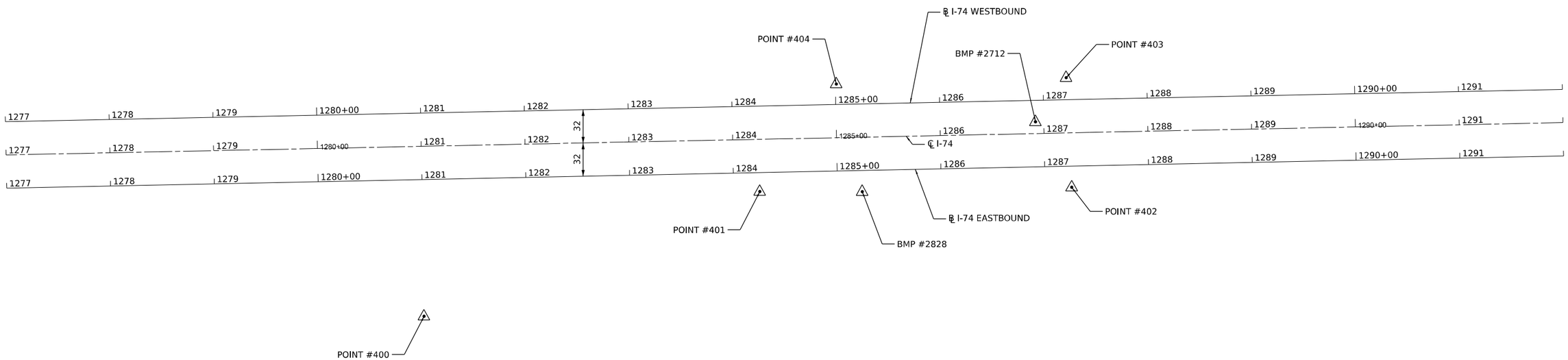

BENCHMARKS

POINT #2712 - CHISELED "□" ON TOP OF SE ABUTMENT END WALL OF SN 092-0002 (WB),
STATION 1286+92.00, OFFSET 11.29' LT., ELEVATION 648.42

POINT #2828 - CHISELED "□" ON TOP OF NW ABUTMENT END WALL OF SN 092-0001 (EB),
STATION 1285+23.65, OFFSET 52.55' RT., ELEVATION 650.61

N

0 50 100 150

SCALE IN FEET

6/23/2025 10:27:24 AM
P:\Projects\22009\22351C_DESIGN\01_Discipline\a_Civil\Working\Sheets\D5_70D66_Sht_ATB.dgn\dgn

EPSTEIN	USER NAME = asharghi	DESIGNED - AS	REVISED -
		DRAWN - AS	REVISED -
	PLOT SCALE = 100.0000 ' / in.	CHECKED - JRK	REVISED -
	PLOT DATE = 6/23/2025	DATE - 05/01/2025	REVISED -

STATE OF ILLINOIS
DIVISION OF TRANSPORTATION

I–74 OVER STONY CREEK
ALIGNMENT, TIES AND BENCHMARKS

SCALE: | SHEET 1 OF 1 SHEETS | STA. TO STA.

F.A.I. RTE.	SECTION	COUNTY	TOTAL SHEETS	SHEET NO.
74	(92-9)BR	VERMILION	87	16
		CONTRACT NO. 70D66		
		ILLINOIS	FED. AID PROJECT	

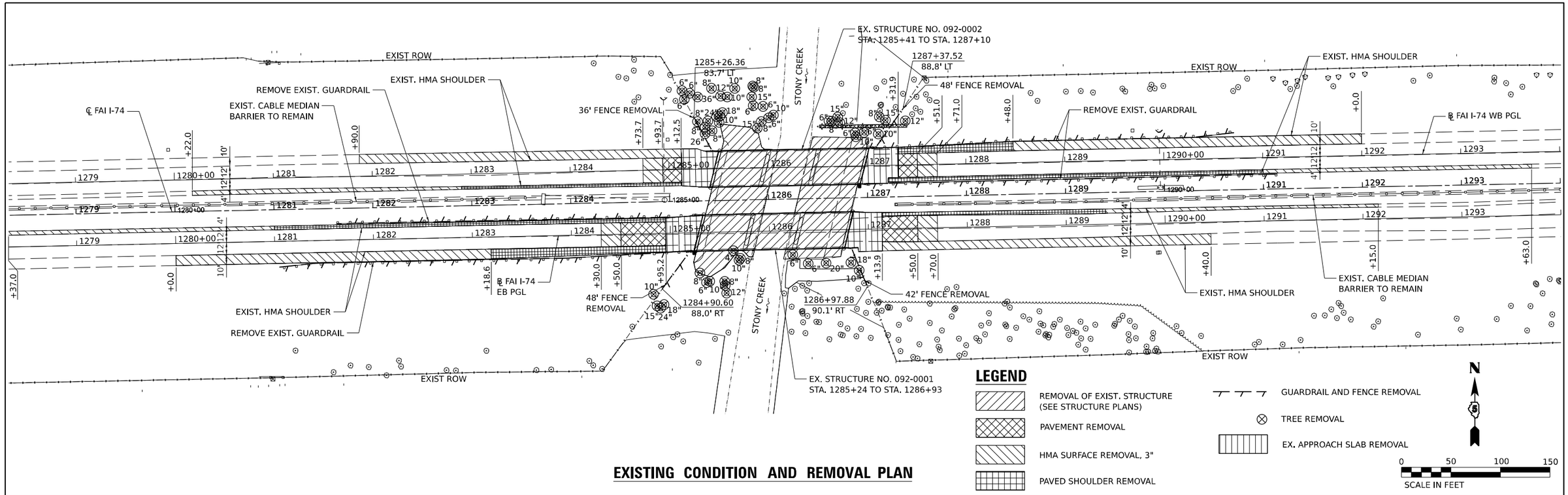

EXISTING CONDITION AND REMOVAL PLAN

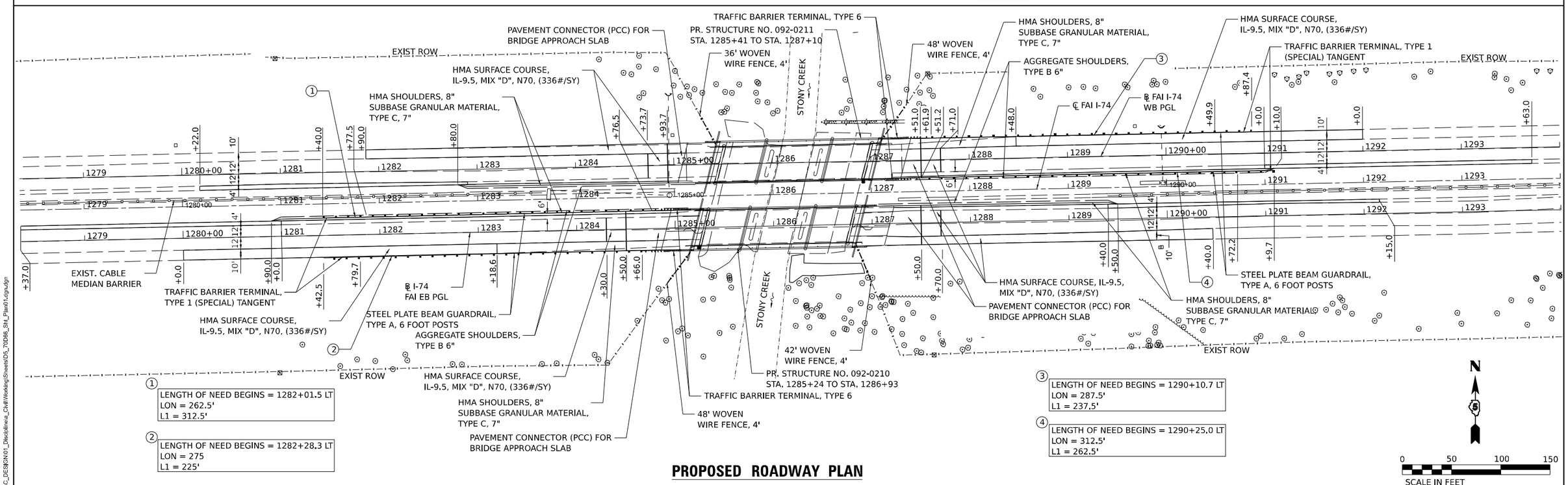

PROPOSED ROADWAY PLAN

EPSTEIN	USER NAME = asharghi	DESIGNED - AS	REVISED -
		DRAWN - AS	REVISED -
	PLOT SCALE = 100.000 ' / in.	CHECKED - JRK	REVISED -
	PLOT DATE = 6/23/2025	DATE - 05/01/2025	REVISED -

STATE OF ILLINOIS
DIVISION OF TRANSPORTATION

I-74 OVER STONY CREEK
EXISTING AND PROPOSED ROADWAY PLAN

SCALE: SHEET 1 OF 1 SHEETS STA. TO STA.

F.A.I. RTE.	SECTION	COUNTY	TOTAL SHEETS	SHEET NO.
74	(92-9)BR	VERMILION	87	17
		CONTRACT NO. 70D66		
		ILLINOIS	FED. AID PROJECT	

6/23/2025 10:27:25 AM
P:\Projects\22000\22351\C_DESIGN\01_Dec\dlinea_Civil\Working\Sheets\D5_70D66_Sht_Plan01.dgn\dgn

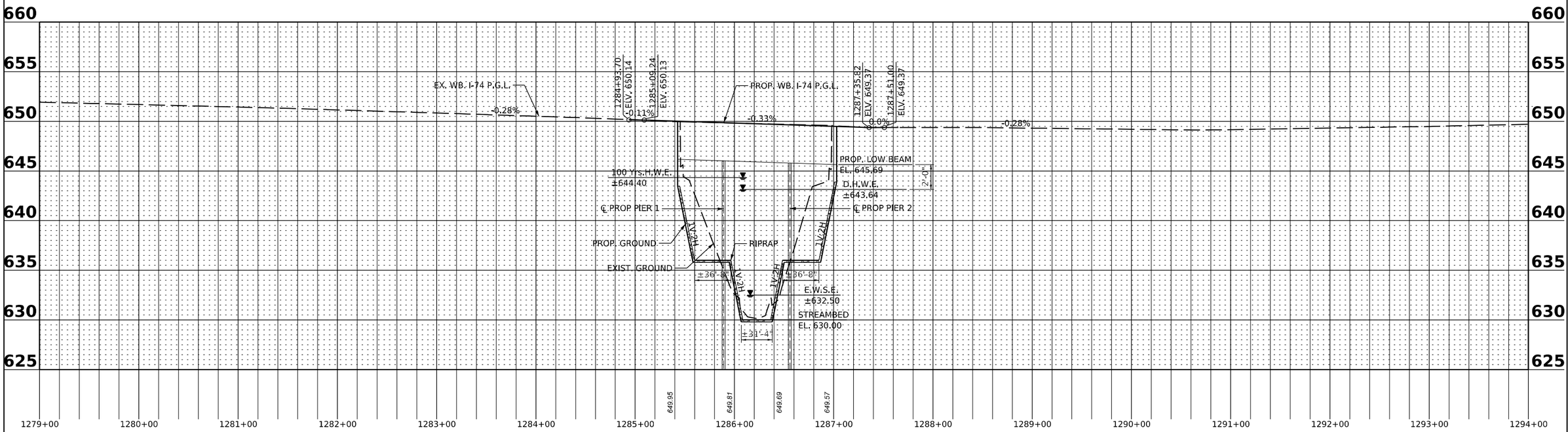

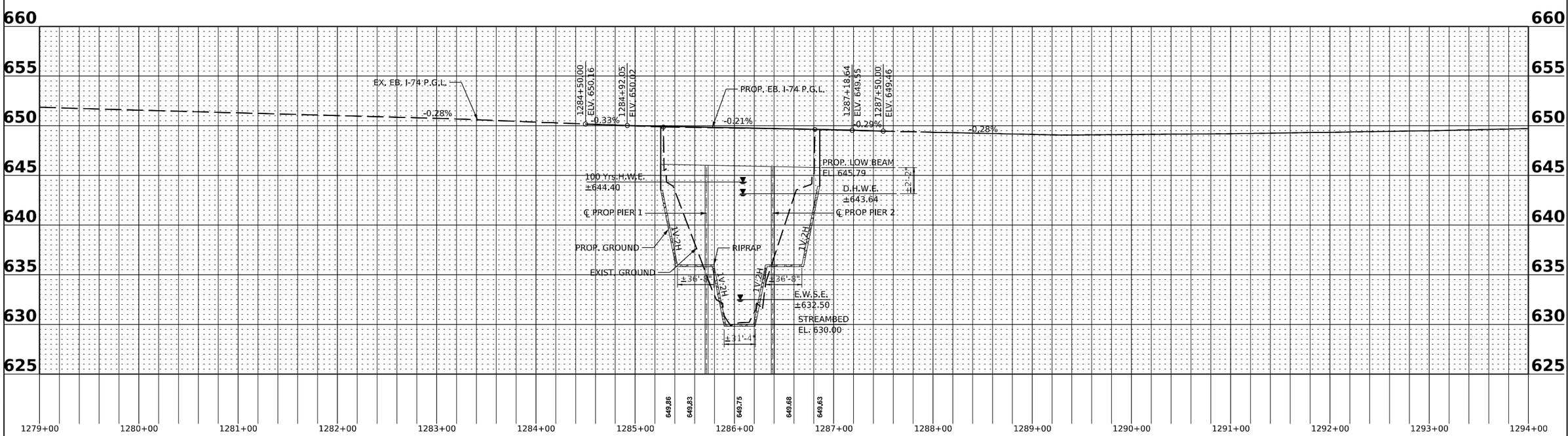

6/23/2025 10:27:26 AM
P:\Projects\220092235\C_DESIGN\01_Discipline\a_Civil\Working\Sheets\D5_70D66_Sht_Prof01.dgn-dgn

EPSTEIN

USER NAME = asharghi	DESIGNED - AS	REVISED -	
	DRAWN - AS	REVISED -	
PLOT SCALE = 100.000 ' / in.	CHECKED - JRK	REVISED -	
PLOT DATE = 6/23/2025	DATE - 05/01/2025	REVISED -	

STATE OF ILLINOIS
DIVISION OF TRANSPORTATION

I–74 OVER STONY CREEK
PROPOSED ROADWAY PROFILE

SCALE: | SHEET 1 OF 1 SHEETS | STA. | TO STA.

F.A.I. RTE.	SECTION	COUNTY	TOTAL SHEETS	SHEET NO.
74	(92-9)BR	VERMILION	87	18

CONTRACT NO. 70D66

ILLINOIS | FED. AID PROJECT

SUGGESTED CONSTRUCTION STAGING TRAFFIC CONTROL NOTES

1. THE CONTRACTOR SHALL USE TEMPORARY PAVEMENT MARKING TAPE, TYPE IV FOR TEMPORARY LANE MARKING ON ALL PERMANENT PAVEMENT.

2. TEMPORARY PAVEMENT MARKING SHALL BE USED ON SURFACES TO BE REMOVED OR OVERLAID.

3. EXISTING TRAFFIC CONTROL SIGNS AND MESSAGES SHALL BE TEMPORARILY COVERED, MODIFIED OR REMOVED AS DIRECTED BY THE ENGINEER.

4. A MINIMUM OF ONE LANE OF EASTBOUND AND WESTBOUND TRAFFIC ON INTERSTATE 74 WILL BE MAINTAINED AT ALL TIMES.

5. ALL OF THE TRAFFIC CONTROL DEVICES SHALL CONFORM TO THE TRAFFIC CONTROL PLANS THE LATEST EDITION OF THE "ILLINOIS MANUAL OF UNIFORM TRAFFIC CONTROL DEVICES FOR STREETS AND HIGHWAYS" AND SHALL BE IN PLACE BEFORE CONSTRUCTION IS STARTED.

6. THE EXACT NUMBER, LOCATION AND SPACING OF ALL SIGNS AND TRAFFIC CONTROL DEVICES MAY BE ADJUSTED TO FIT FIELD CONDITIONS AS DIRECTED BY THE ENGINEER.

7. ALL EXISTING PAVEMENT MARKINGS THAT ARE IN CONFLICT WITH THE TEMPORARY PAVEMENT MARKINGS FOR TRAFFIC CONTROL AND PROTECTION PLANS SHALL BE REMOVED. THIS WORK SHALL BE PAID FOR A PAVEMENT MARKING REMOVAL - WATER BLASTING.

8. ARROW BOARDS SHALL HAVE SOLAR POWER CAPABILITY.

9. THE CONTRACTOR SHALL PROVIDE ADVANCE NOTICE USING CHANGEABLE MESSAGE SIGNS ONE WEEK IN ADVANCE OF THE START OF CONSTRUCTION.

10. CONSTRUCTION WORK WILL NOT COMMENCE UNTIL ALL SIGNS AND PAVEMENT MARKINGS IN CONFLICT WITH THE STAGED CONSTRUCTION HAVE BEEN REMOVED AND ALL TEMPORARY SIGNS, PAVEMENT MARKINGS AND BARRICADES ARE IN PLACE AND APPROVED BY THE ENGINEER.

11. THE CONTRACTOR SHALL PROVIDE ALL BARRIERS, SIGNS, SUPPORTS, PAVEMENT MARKING MATERIALS AND LABOR NECESSARY FOR THE MAINTENANCE OF TRAFFIC UNLESS NOTED OTHERWISE IN THE SPECIAL PROVISIONS.

12 IMMEDIATELY AFTER THE COMPLETION OF THE WORK, THE CONTRACTOR SHALL RESTORE ALL PERMANENT PAVEMENT MARKINGS, SIGNS, AND OTHER TRAFFIC CONTROL DEVICES THAT WERE COVERED, REMOVED, MODIFIED, DAMAGED OR OTHERWISE AFFECTED BY THE CONSTRUCTION.

13. THE CONTRACTOR SHALL PROVIDE, ERECT AND MAINTAIN ALL NECESSARY BARRICADES, CONES, DRUMS, FLAGS AND LIGHTS FOR WARNING AND PROTECTION OF TRAFFIC, AS REQUIRED BY SECTIONS 107 AND 701 THROUGH 704 OF THE STANDARD SPECIFICATIONS.

14. FOR EACH STAGE OF CONSTRUCTION PROVIDE TRAFFIC CONTROL AS DESCRIBED HEREIN, COORDINATE INSTALLATION OF TEMPORARY PAVEMENT MARKINGS AND OTHER TRAFFIC CONTROL DEVICES WITH THE EXISTING TRAFFIC PATTERNS AT THE END OF THE PROJECT.

15. COST OF ANCHORING TEMPORARY CONCRETE BARRIER TO BRIDGE DECK IS INCLUDED IN THE COST OF TEMPORARY CONCRETE BARRIER. ADDITIONAL PINNING BEYOND THE STRUCTURE LIMITS SHALL BE PAID FOR AS 70400125 PINNING TEMPORARY CONCRETE BARRIER.

SUGGESTED CONSTRUCTION STAGING TRAFFIC CONTROL

THE FOLLOWING SEQUENCE OF TRAFFIC CONTROL IS SUGGESTED. VARIATIONS MAY BE MADE WITH THE APPROVAL OF THE ENGINEER, IF THE PREVAILING SITE CONDITIONS AT THE TIME OF CONSTRUCTION ALLOW.

PRE STAGE

CLOSE LEFT (INSIDE) LANE OF BOTH EASTBOUND AND WESTBOUND I-74 AS SHOWN ON TRAFFIC STAGING TYPICAL SECTIONS.
REDIRECT TRAFFIC TO USE RIGHT (OUTSIDE) LANE USING HIGHWAY STANDARD 701401.
INLAY INSIDE SHOULDERS ON BOTH EASTBOUND AND WESTBOUND TO REMOVE EXISTING RUMBLE STRIPS.
PAID FOR AS "HMA SURFACE REMOVAL, 3" AND "HMA SURFACE COURSE, IL-9.5, MIX "D", N70".
PAVEMENT PATCHING ON INSIDE LANES OF I-74 FOR TRAFFIC IN STAGE 1.
PATCHING ON EAST (12 FT) AND WEST (18 FT) BRIDGE APPROACH FOR I-74 EB.
PATCHING ON EAST (16 FT) BRIDGE APPROACH FOR I-74 WB.

STAGE 1

EASTBOUND

PLACE TEMPORARY CONCRETE BARRIER TO CLOSE RIGHT (OUTSIDE) LANE OF EASTBOUND I-74.
REDIRECT TRAFFIC TO USE LEFT (INSIDE) LANE AND SHOULDER USING HIGHWAY STANDARD 701402. REMOVE SOUTH HALF OF EXISTING BRIDGE DECK AND SUBSTRUCTURE. CONSTRUCT PROPOSED SOUTH HALF OF BRIDGE DECK AND SUBSTRUCTURE AND COMPLETE OUTSIDE (RIGHT) SHOULDER IMPROVEMENTS.

WESTBOUND

PLACE TEMPORARY CONCRETE BARRIER TO CLOSE RIGHT (OUTSIDE) LANE OF WESTBOUND I-74.
REDIRECT TRAFFIC TO USE LEFT (INSIDE) LANE AND SHOULDER USING HIGHWAY STANDARD 701402. REMOVE NORTH HALF OF EXISTING BRIDGE DECK AND SUBSTRUCTURE. CONSTRUCT PROPOSED NORTH HALF OF BRIDGE DECK AND SUBSTRUCTURE AND COMPLETE OUTSIDE (RIGHT) SHOULDER IMPROVEMENTS.

STAGE 2

EASTBOUND

PLACE TEMPORARY CONCRETE BARRIER TO CLOSE LEFT (INSIDE) LANE OF EASTBOUND I-74 .
REDIRECT TRAFFIC TO USE RIGHT (OUTSIDE) LANE AND SHOULDER USING HIGHWAY STANDARD 701402. REMOVE NORTH HALF OF EXISTING BRIDGE DECK AND SUBSTRUCTURE. CONSTRUCT PROPOSED NORTH HALF OF BRIDGE DECK AND SUBSTRUCTURE AND COMPLETE INSIDE (LEFT) SHOULDER IMPROVEMENTS.

WESTBOUND

PLACE TEMPORARY CONCRETE BARRIER TO CLOSE LEFT (INSIDE) LANE OF WESTBOUND I-74.
REDIRECT TRAFFIC TO USE RIGHT (OUTSIDE) LANE AND SHOULDER USING HIGHWAY STANDARD 701402. REMOVE SOUTH HALF OF EXISTING BRIDGE DECK AND SUBSTRUCTURE. CONSTRUCT PROPOSED SOUTH HALF OF BRIDGE DECK AND SUBSTRUCTURE AND COMPLETE INSIDE (LEFT) SHOULDER IMPROVEMENTS.

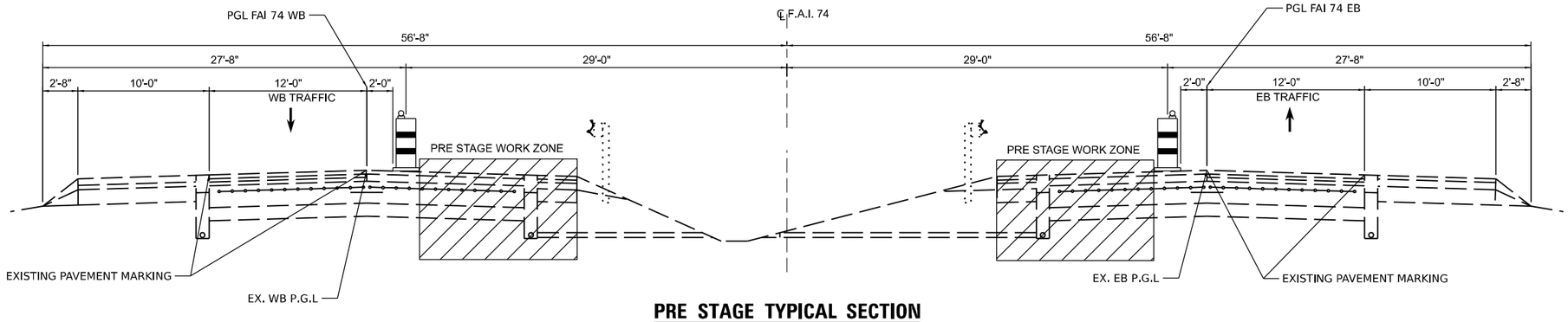

PRE STAGE TYPICAL SECTION

(LOOKING EAST)

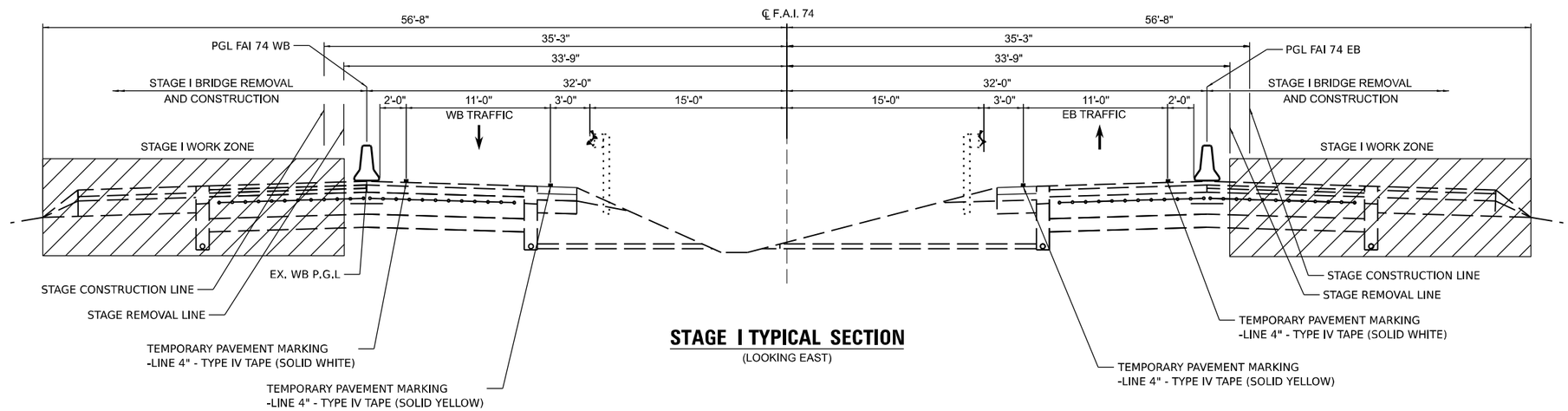

STAGE I TYPICAL SECTION

(LOOKING EAST)

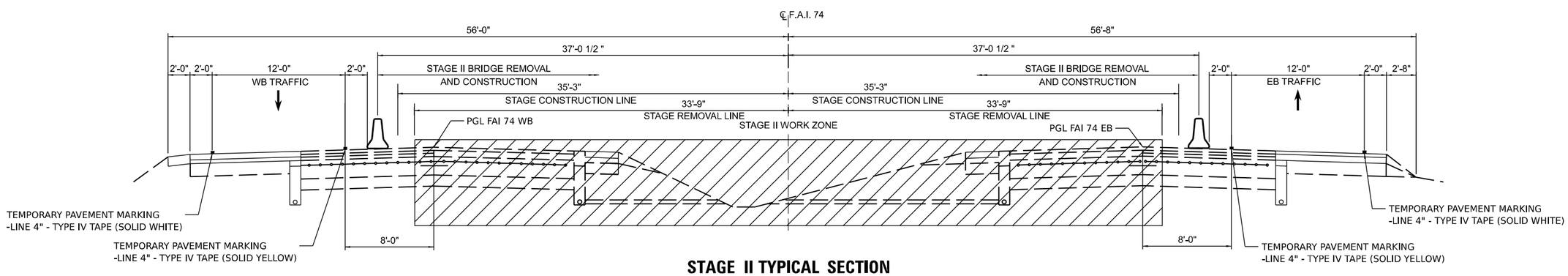

STAGE II TYPICAL SECTION

(LOOKING EAST)

6/23/2025 10:27:29 AM
P:\Projects\230\0223\01C_DESIGN\01_Disciplines_Civil\Working\Sheets\D5_70D66_Sht_MOTTyp.dgn

EPSTEIN	USER NAME = asharghi	DESIGNED - AS	REVISED -	STATE OF ILLINOIS DIVISION OF TRANSPORTATION	I-74 OVER STONY CREEK STAGING TYPICAL SECTIONS
		DRAWN - AS	REVISED -		
	PLOT SCALE = 10.0000 ' / in.	CHECKED - JRK	REVISED -		
	PLOT DATE = 6/23/2025	DATE - 05/01/2025	REVISED -		SCALE: SHEET 2 OF 7 SHEETS STA. TO STA.

F.A.I. RTE.	SECTION	COUNTY	TOTAL SHEETS	SHEET NO.
74	(92-9)BR	VERMILION	87	20
		CONTRACT NO. 70D66		
		ILLINOIS FED. AID PROJECT		

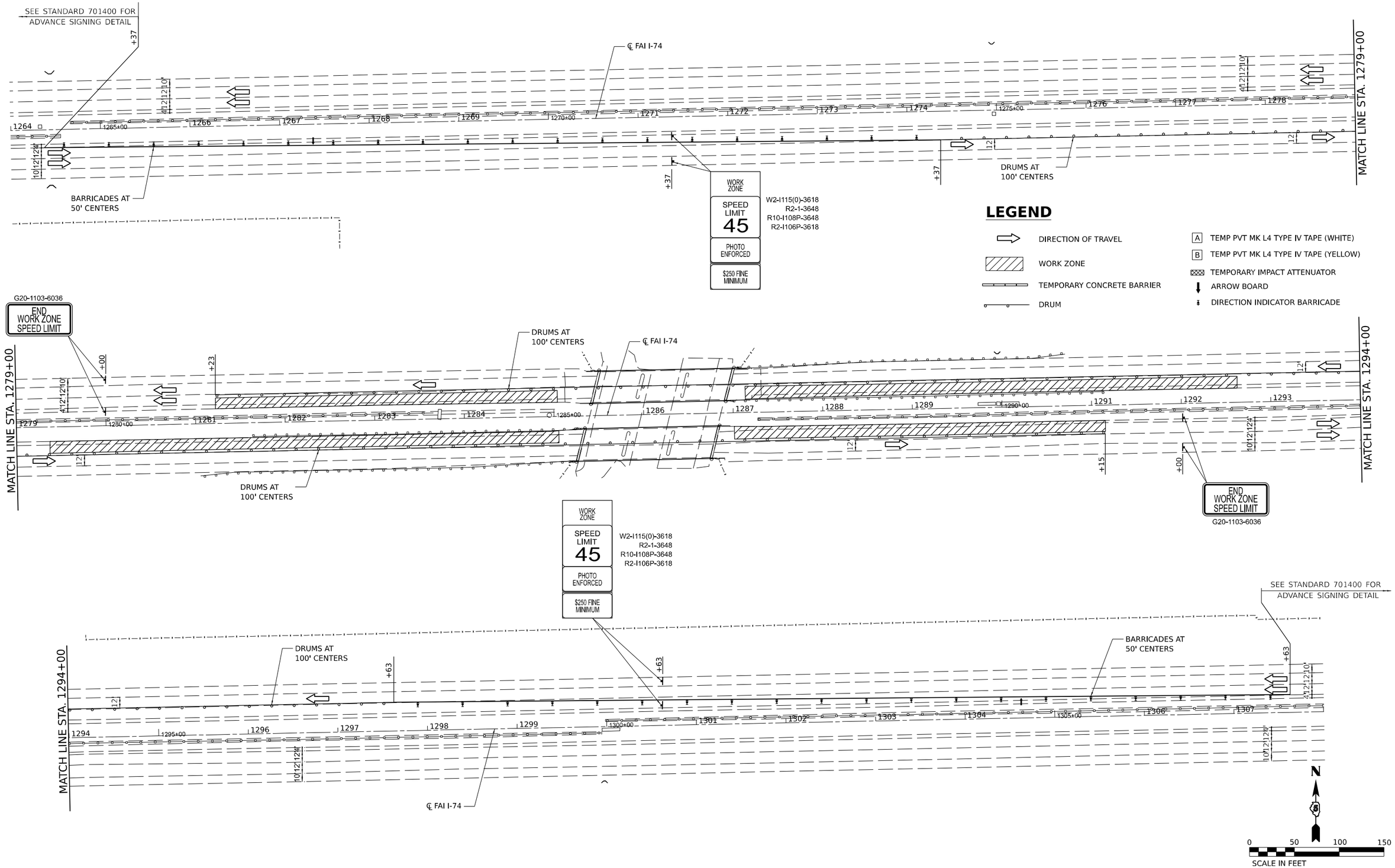

EPSTEIN	USER NAME = asharghi	DESIGNED - AS	REVISED -	STATE OF ILLINOIS DIVISION OF TRANSPORTATION	I-74 OVER STONY CREEK STAGE CONSTRUCTION TRAFFIC CONTROL – PRE STAGE
		DRAWN - AS	REVISED -		
	PLOT SCALE = 100.0000 ' / in.	CHECKED - JRK	REVISED -		
	PLOT DATE = 6/23/2025	DATE - 05/01/2025	REVISED -		SCALE: SHEET 3 OF 7 SHEETS STA. TO STA.

F.A.I. RTE.	SECTION	COUNTY	TOTAL SHEETS	SHEET NO.
74	(92-9)BR	VERMILION	87	21
		CONTRACT NO. 70D66		
		ILLINOIS FED. AID PROJECT		

6/23/2025 10:27:29 AM
P:\Projects\22000\22351C_DESIGN\01_Discipline\a_Civil\Working\Sheets\D5_70D66_Sht_MOTPreStage.dgn:dgn

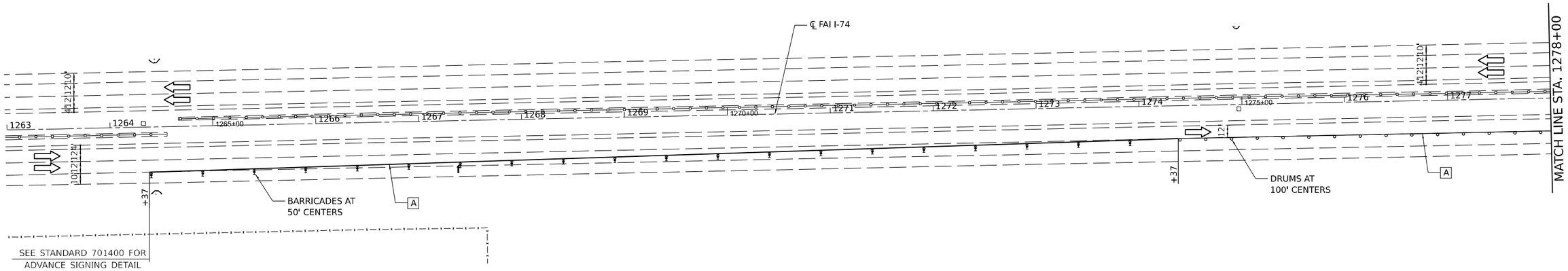

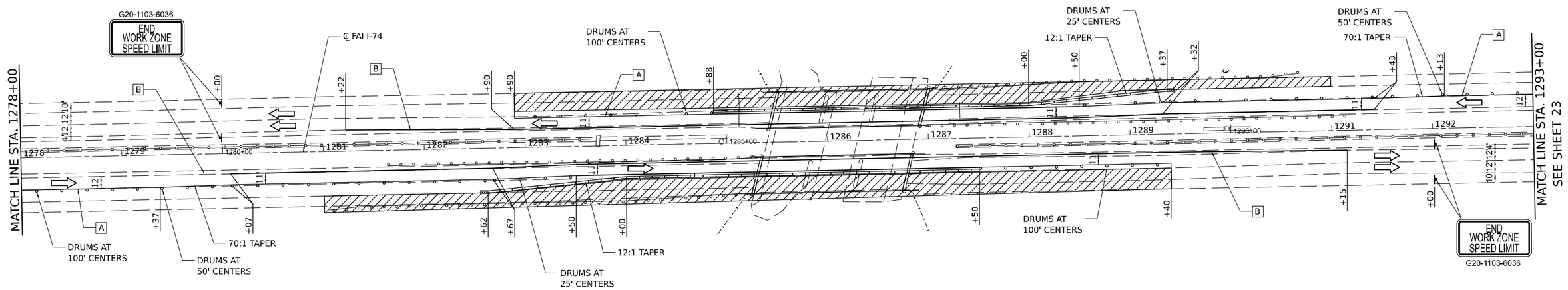

LEGEND

- DIRECTION OF TRAVEL
- WORK ZONE
- TEMPORARY CONCRETE BARRIER
- DRUM
- A — TEMP PVT MK L4 TYPE IV TAPE (WHITE)
- B — TEMP PVT MK L4 TYPE IV TAPE (YELLOW)
- TEMPORARY IMPACT ATTENUATOR
- ARROW BOARD
- DIRECTION INDICATOR BARRICADE

N

0 50 100 150
SCALE IN FEET

6/23/2025 10:27:29 AM
P:\Projects\22000\22351\C_DESIGN\01_Discipline\a_Civil\Working\Sheets\D5_70D66_Sht_MOTStage1_01.dgn:dgn

EPSTEIN	USER NAME = asharghi	DESIGNED - AS	REVISED -
		DRAWN - AS	REVISED -
	PLOT SCALE = 100.0000 ' / in.	CHECKED - JRK	REVISED -
	PLOT DATE = 6/23/2025	DATE - 05/01/2025	REVISED -

STATE OF ILLINOIS
DIVISION OF TRANSPORTATION

I-74 OVER STONY CREEK
STAGE CONSTRUCTION – STAGE I

SCALE: SHEET 4 OF 7 SHEETS STA. TO STA.

F.A.I. RTE.	SECTION	COUNTY	TOTAL SHEETS	SHEET NO.
74	(92-9)BR	VERMILION	87	22
		CONTRACT NO. 70D66		
	ILLINOIS	FED. AID PROJECT		

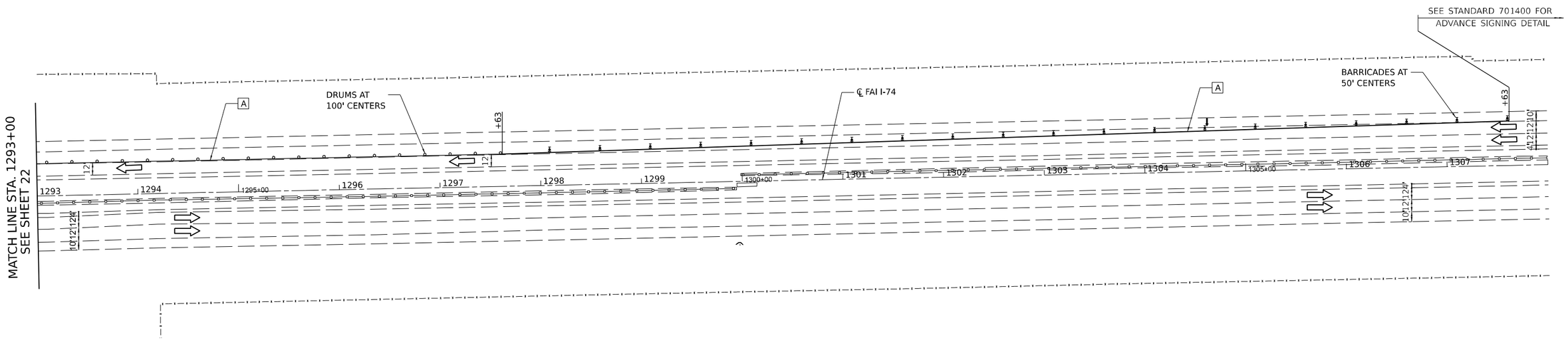

N

0 50 100 150
SCALE IN FEET

LEGEND

- DIRECTION OF TRAVEL
- WORK ZONE
- TEMPORARY CONCRETE BARRIER
- DRUM
- A TEMP PVT MK L4 TYPE IV TAPE (WHITE)
- B TEMP PVT MK L4 TYPE IV TAPE (YELLOW)
- TEMPORARY IMPACT ATTENUATOR
- ARROW BOARD
- DIRECTION INDICATOR BARRICADE

6/23/2025 10:27:30 AM
P:\Projects\22000\22331C_DESIGN\01_Disciplines_Civil\Working\Sheets\D5_70D66_Sht_MOTStage1_02.dgn.dgn

EPSTEIN	USER NAME = asharghi	DESIGNED - AS	REVISED -	STATE OF ILLINOIS DIVISION OF TRANSPORTATION	I-74 OVER STONY CREEK STAGE CONSTRUCTION – STAGE I
		DRAWN - AS	REVISED -		
	PLOT SCALE = 100.0000 ' / in.	CHECKED - JRK	REVISED -		SCALE: SHEET 5 OF 7 SHEETS STA. TO STA.
	PLOT DATE = 6/23/2025	DATE - 05/01/2025	REVISED -		

F.A.I. RTE.	SECTION	COUNTY	TOTAL SHEETS	SHEET NO.
74	(92-9)BR	VERMILION	87	23
		CONTRACT NO. 70D66		
	ILLINOIS	FED. AID PROJECT		

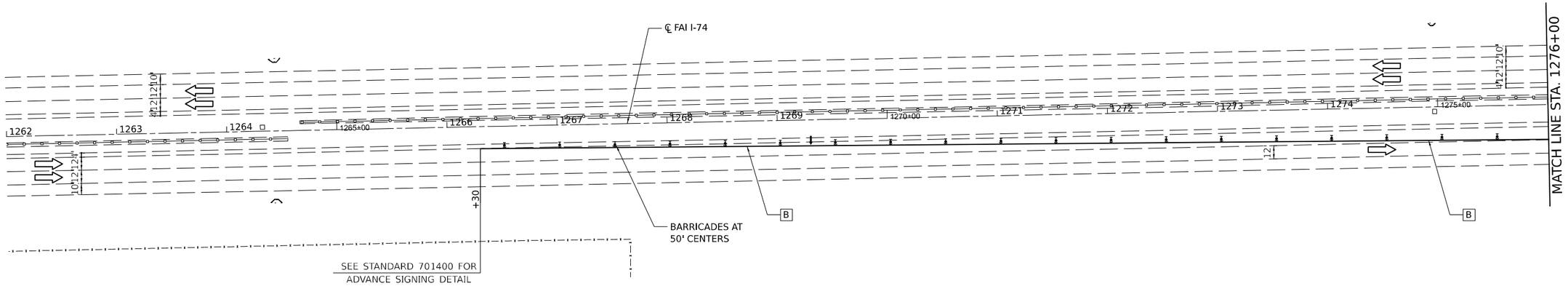

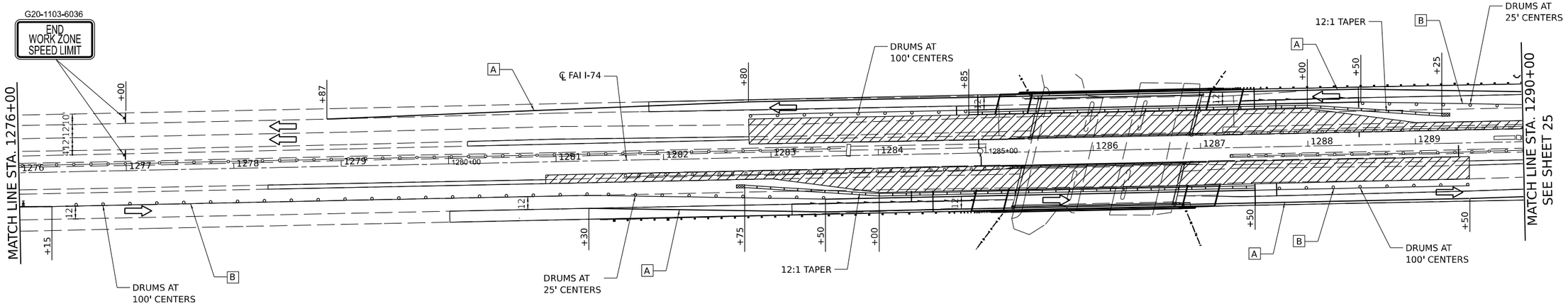

LEGEND

- DIRECTION OF TRAVEL
- WORK ZONE
- TEMPORARY CONCRETE BARRIER
- DRUM
- A — TEMP PVT MK L4 TYPE IV TAPE (WHITE)
- B — TEMP PVT MK L4 TYPE IV TAPE (YELLOW)
- TEMPORARY IMPACT ATTENUATOR
- ARROW BOARD
- DIRECTION INDICATOR BARRICADE

N

0 50 100 150
SCALE IN FEET

6/23/2025 10:27:30 AM
P:\Projects\22000\22351C_DESIGN\01_Discipline\a_Civil\Working\Sheets\D5_70D66_Sht_MOTStageII_01.dgn-dgn

EPSTEIN	USER NAME = asharghi	DESIGNED - AS	REVISED -
		DRAWN - AS	REVISED -
	PLOT SCALE = 100.0000 ' / in.	CHECKED - JRK	REVISED -
	PLOT DATE = 6/23/2025	DATE - 05/01/2025	REVISED -

STATE OF ILLINOIS
DIVISION OF TRANSPORTATION

I-74 OVER STONY CREEK
STAGE CONSTRUCTION – STAGE II

SCALE: | SHEET 6 OF 7 SHEETS | STA. TO STA.

F.A.I. RTE.	SECTION	COUNTY	TOTAL SHEETS	SHEET NO.
74	(92-9)BR	VERMILION	87	24
		CONTRACT NO. 70D66		
		ILLINOIS FED. AID PROJECT		

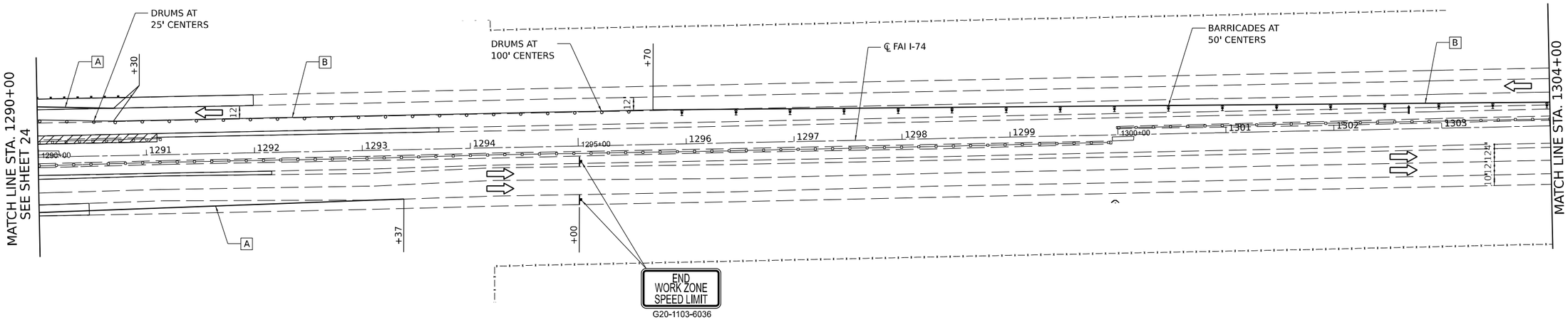

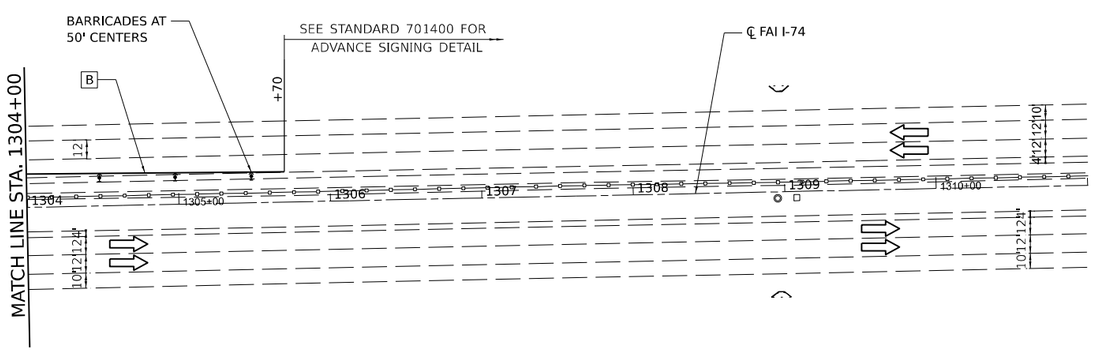

LEGEND

- DIRECTION OF TRAVEL
- WORK ZONE
- TEMPORARY CONCRETE BARRIER
- DRUM
- A TEMP PVT MK L4 TYPE IV TAPE (WHITE)
- B TEMP PVT MK L4 TYPE IV TAPE (YELLOW)
- TEMPORARY IMPACT ATTENUATOR
- ARROW BOARD
- DIRECTION INDICATOR BARRICADE

N

0 50 100 150

SCALE IN FEET

6/23/2025 10:27:31 AM
P:\Projects\22000\22351\C_DESIGN\01_Discipline\a_Civil\Working\Sheets\D5_70D66_Sht_MOTStage1_02.dgn.dgn

EPSTEIN	USER NAME = asharghi	DESIGNED - AS	REVISED -	STATE OF ILLINOIS DIVISION OF TRANSPORTATION	I-74 OVER STONY CREEK STAGE CONSTRUCTION – STAGE II	F.A.I. RTE.	SECTION	COUNTY	TOTAL SHEETS / SHEET NO.
		DRAWN - AS	REVISED -			74	(92-9)BR	VERMILION	87 / 25
	PLOT SCALE = 100.0000 ' / in.	CHECKED - JRK	REVISED -					CONTRACT NO. 70D66	
	PLOT DATE = 6/23/2025	DATE - 05/01/2025	REVISED -		SCALE: SHEET 7 OF 7 SHEETS STA. TO STA.		ILLINOIS	FED. AID PROJECT	

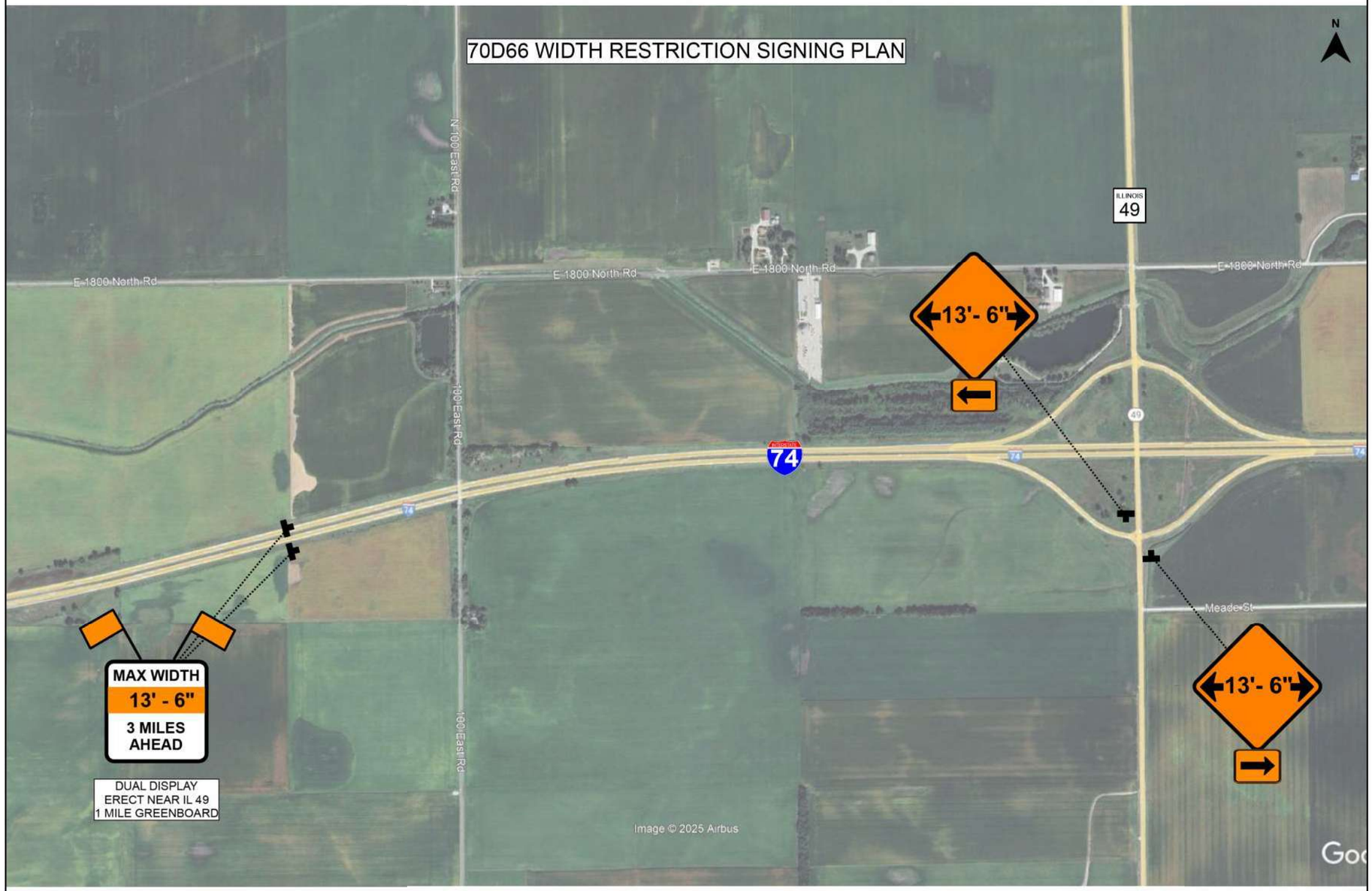

*SEE SHEET 76 OF 87 FOR WIDTH RESTRICTION SIGNING DETAILS

6/23/2025 10:27:31 AM
P:\Projects\22000\22351C_DESIGN\01_Discipline\a_Civil\WorkingSheets\70D66_SHL Width Plan01.dgn

EPSTEIN	USER NAME = asharghi	DESIGNED - AS	REVISED -	STATE OF ILLINOIS DIVISION OF TRANSPORTATION	I-74 OVER STONY CREEK WIDTH RESTRICTION SIGNING PLAN	F.A.I. RTE.	SECTION	COUNTY	TOTAL SHEETS / SHEET NO.
		DRAWN - AS	REVISED -			74	(92-9)BR	VERMILION	87 / 26
	PLOT SCALE = 2.000 ' / in.	CHECKED - JRK	REVISED -					CONTRACT NO. 70D66	
	PLOT DATE = 6/23/2025	DATE - 05/01/2025	REVISED -		SCALE: NONE / SHEET 1 OF 3 SHEETS / STA. / TO STA.		ILLINOIS	FED. AID PROJECT	

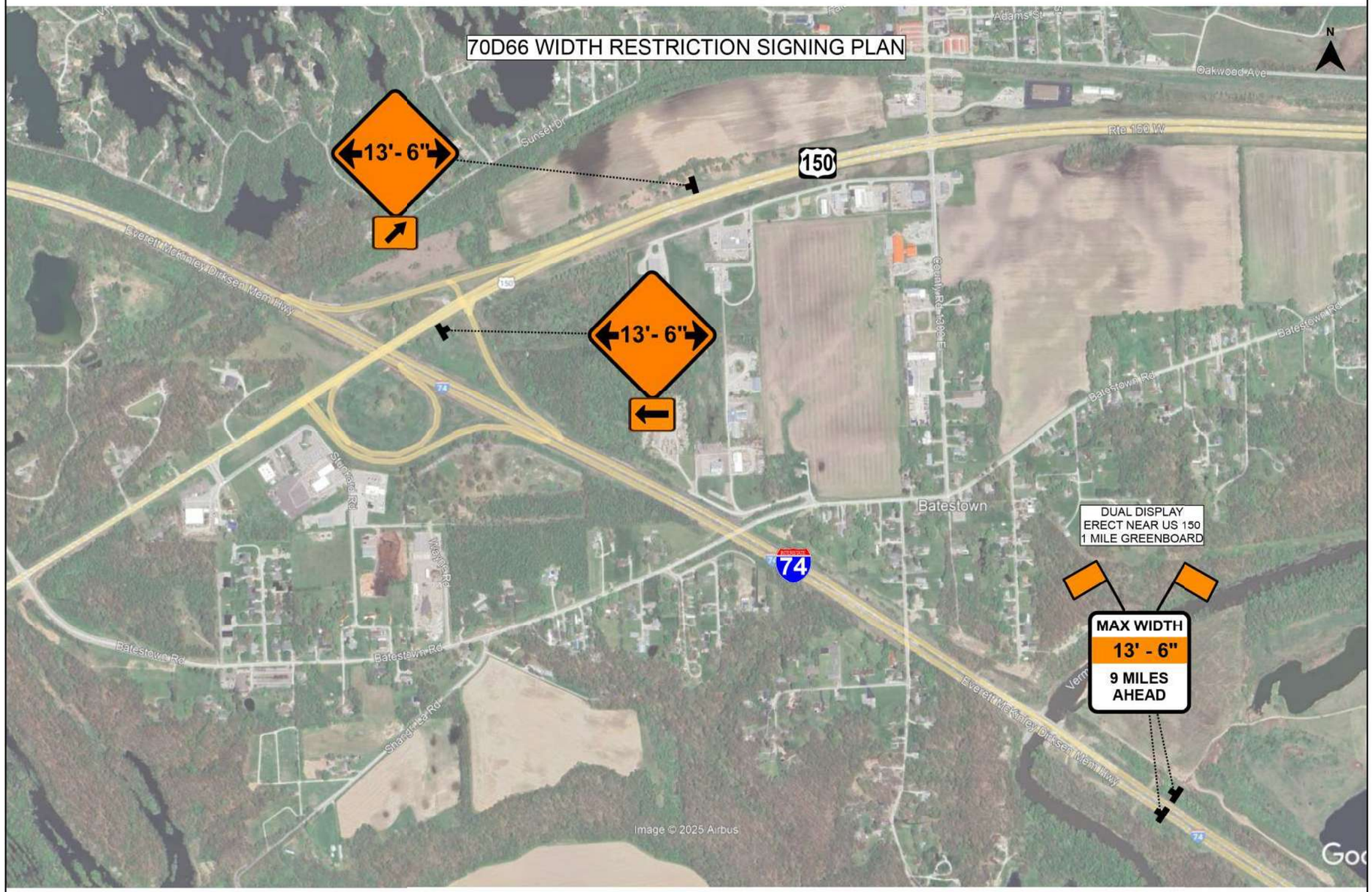

*SEE SHEET 76 OF 87 FOR WIDTH RESTRICTION SIGNING DETAILS

EPSTEIN	USER NAME = asharghi	DESIGNED - AS	REVISED -	STATE OF ILLINOIS DIVISION OF TRANSPORTATION	I-74 OVER STONY CREEK WIDTH RESTRICTION SIGNING PLAN	F.A.I. RTE.	SECTION	COUNTY	TOTAL SHEETS / SHEET NO.
		DRAWN - AS	REVISED -			74	(92-9)BR	VERMILION	87 / 27
	PLOT SCALE = 2.000 ' / in.	CHECKED - JRK	REVISED -					CONTRACT NO. 70D66	
	PLOT DATE = 6/23/2025	DATE - 05/01/2025	REVISED -		SCALE: NONE / SHEET 2 OF 3 SHEETS / STA. TO STA.			ILLINOIS / FED. AID PROJECT	

6/23/2025 10:27:34 AM
P:\Projects\22000\22351C_DESIGN\01_Discipline\a_Civil\WorkingSheets\70D66_SHL Width Plan02.dgn

*SEE SHEET 76 OF 87 FOR WIDTH RESTRICTION SIGNING DETAILS

6/23/2025 10:27:37 AM
P:\Projects\22009\22351C_DESIGN\01_Discipline\a_Civil\Working\Sheets\70D66_Sht_Width Plan02.dgn

EPSTEIN	USER NAME = asharghi	DESIGNED - AS	REVISED -	STATE OF ILLINOIS DIVISION OF TRANSPORTATION	I-74 OVER STONY CREEK WIDTH RESTRICTION SIGNING PLAN	F.A.I. RTE.	SECTION	COUNTY	TOTAL SHEETS / SHEET NO.
		DRAWN - AS	REVISED -			74	(92-9)BR	VERMILION	87 / 28
	PLOT SCALE = 2.000 ' / in.	CHECKED - JRK	REVISED -					CONTRACT NO. 70D66	
	PLOT DATE = 6/23/2025	DATE - 05/01/2025	REVISED -		SCALE: NONE / SHEET 3 OF 3 SHEETS / STA. TO STA.			ILLINOIS / FED. AID PROJECT	

SEDIMENT CONTROL SILT CURTAIN DETAIL AND NOTES

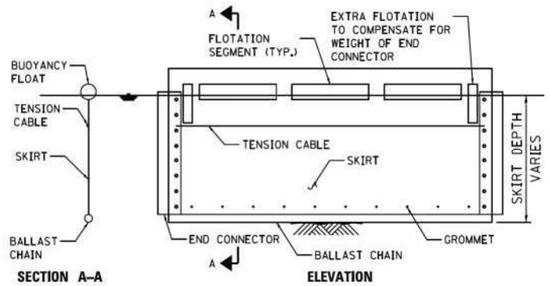

NOTES:

1. FLOTATION BOOM SHALL BE ANCHORED TO PREVENT DRIFT SHOREWARD OR DOWNSTREAM. ANCHORAGES SHALL BE INSTALLED ON BOTH SHORE AND STREAM SIDE. BOOMS ARE NOT TO BE INSTALLED ACROSS FLOWING BODY OF WATER.

2. SHORE ANCHORS SHALL CONSIST OF A POST WITH DEADMAN OR APPROVED EQUAL. STREAM ANCHORS SHALL BE OF SUFFICIENT SIZE TO STABILIZE THE BARRIER WITH NUMBER AND SPACING DEPENDENT ON WATERWAY VELOCITIES.

3. FABRIC SECTIONS SHALL BE CONNECTED END TO WITH MINIMUM ⅝" DIAMETER POLYPROPYLENE ROPE.

4. DESIGN OF BOOM AND ANCHORAGE SHALL BE IN ACCORDANCE WITH MANUFACTURER'S RECOMMENDATIONS. BOTTOM OF BOOM SHALL REACH BOTTOM OF WATERWAY USING ONE OR TWO VERTICAL SECTIONS AS REQUIRED.

5. MAINTENANCE SHALL BE PERFORMED AS NEEDED. CONTRACTOR SHALL REMOVE THE BOOM AT COMPLETION OF WORK IN A MANNER THAT WILL PREVENT SILTATION OF THE WATERWAY.

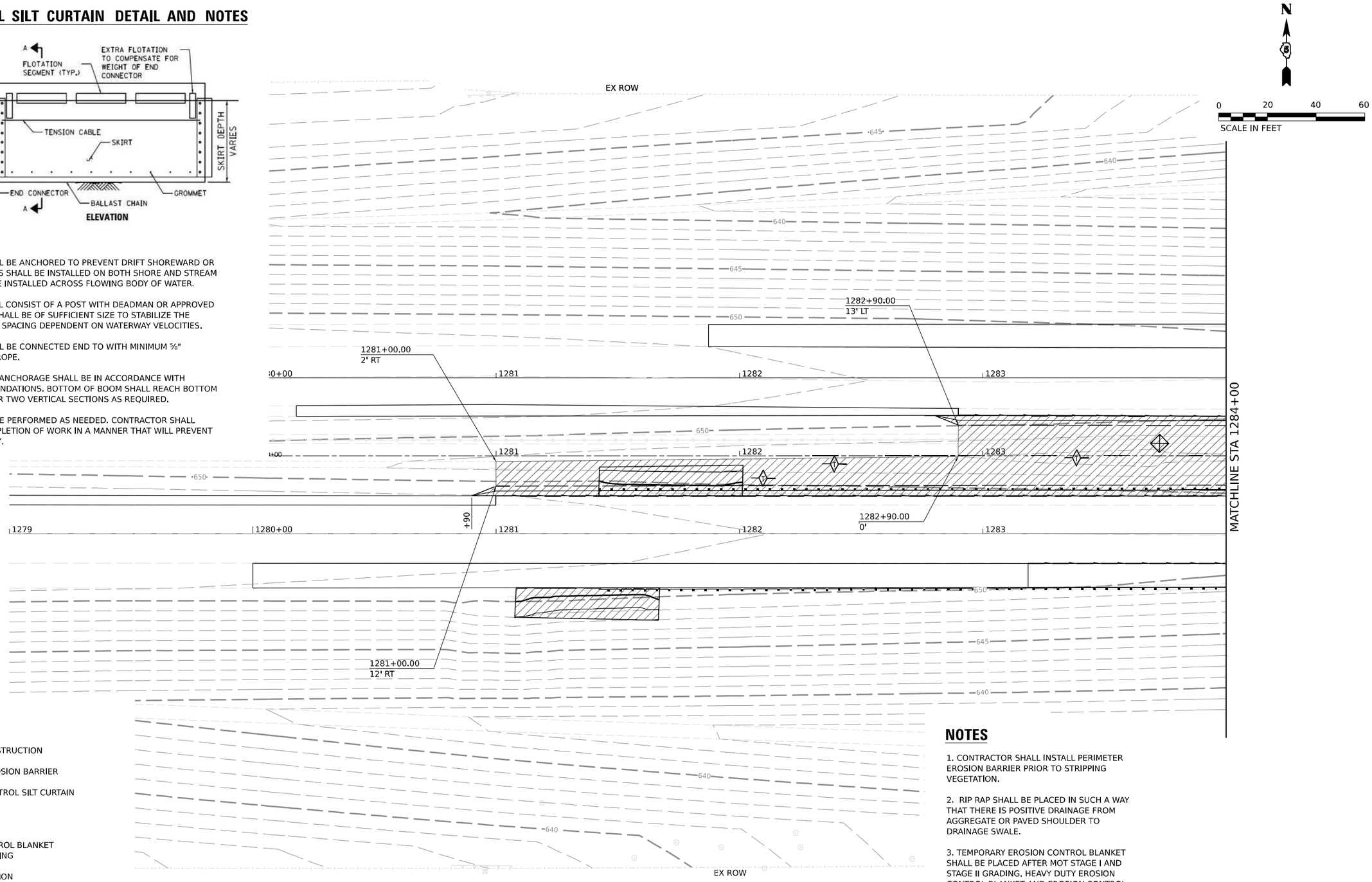

LEGEND

- LIMITS OF CONSTRUCTION
- PERMIETER EROSION BARRIER
- SEDIMENT CONTROL SILT CURTAIN
- RIPRAP
  FILTER FABRIC
- EROSION CONTROL BLANKET
  CLASS 2A SEEDING
- INLET PROTECTION
- TEMPORARY DITCH CHECKS

NOTES

1. CONTRACTOR SHALL INSTALL PERIMETER EROSION BARRIER PRIOR TO STRIPPING VEGETATION.

2. RIP RAP SHALL BE PLACED IN SUCH A WAY THAT THERE IS POSITIVE DRAINAGE FROM AGGREGATE OR PAVED SHOULDER TO DRAINAGE SWALE.

3. TEMPORARY EROSION CONTROL BLANKET SHALL BE PLACED AFTER MOT STAGE I AND STAGE II GRADING. HEAVY DUTY EROSION CONTROL BLANKET AND EROSION CONTROL BLANKET SHALL BE PLACED FOR FINAL SEEDING.

6/23/2025 10:27:40 AM
P:\Projects\2200\22301C_DESIGN\01_Disciplines_Civil\Working\Sheets\D5_70D66_Sht_Erosion01.dgn

EPSTEIN	USER NAME = asharghi	DESIGNED - AS	REVISED -	STATE OF ILLINOIS DIVISION OF TRANSPORTATION	I–74 OVER STONY CREEK PROPOSED EROSION CONTROL AND FINAL RESTORATION PLAN	F.A.I. RTE.	SECTION	COUNTY	TOTAL SHEETS	SHEET NO.
		DRAWN - AS	REVISED -			74	(92-9)BR	VERMILION	87	29
	PLOT SCALE = 40.000 ' / in.	CHECKED - JRK	REVISED -					CONTRACT NO. 70D66		
	PLOT DATE = 6/23/2025	DATE - 05/01/2025	REVISED -		SCALE: 1" = 20' SHEET 1 OF 3 SHEETS STA. 1279+00 TO STA. 1284+00			ILLINOIS FED. AID PROJECT		

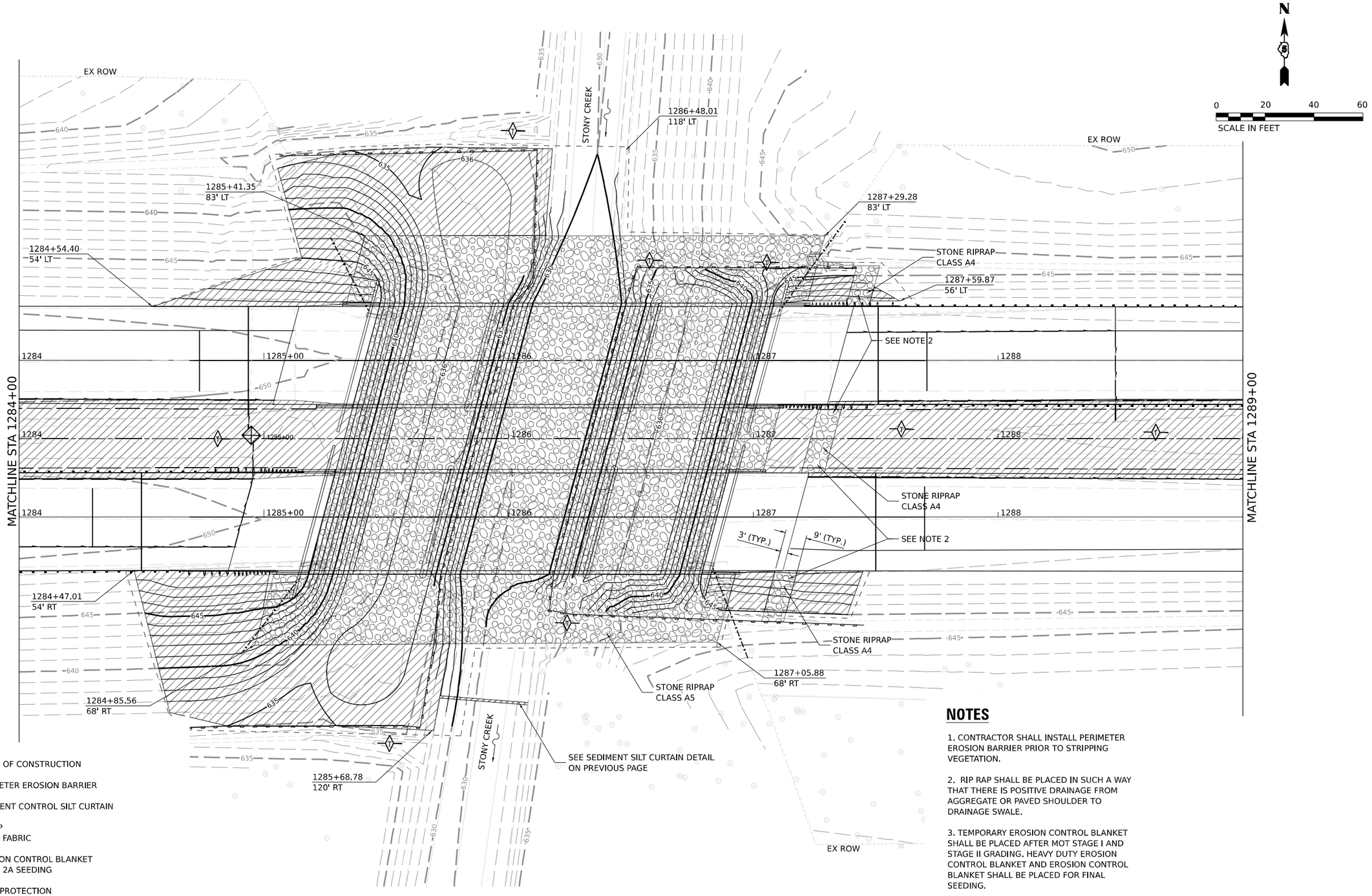

LEGEND

- LIMITS OF CONSTRUCTION
- PERMIETER EROSION BARRIER
- SEDIMENT CONTROL SILT CURTAIN
- RIPRAP
  FILTER FABRIC
- EROSION CONTROL BLANKET
  CLASS 2A SEEDING
- INLET PROTECTION
- TEMPORARY DITCH CHECKS

NOTES

1. CONTRACTOR SHALL INSTALL PERIMETER EROSION BARRIER PRIOR TO STRIPPING VEGETATION.

2. RIP RAP SHALL BE PLACED IN SUCH A WAY THAT THERE IS POSITIVE DRAINAGE FROM AGGREGATE OR PAVED SHOULDER TO DRAINAGE SWALE.

3. TEMPORARY EROSION CONTROL BLANKET SHALL BE PLACED AFTER MOT STAGE I AND STAGE II GRADING. HEAVY DUTY EROSION CONTROL BLANKET AND EROSION CONTROL BLANKET SHALL BE PLACED FOR FINAL SEEDING.

6/23/2025 10:28:14 AM
P:\Projects\2300\2235\1C_DESIGN\01_Disciplines_Civil\Working\Sheets\D6_70D66_Sht_Erosion02.dgn

EPSTEIN

USER NAME = asharghi	DESIGNED - AS	REVISED -	
	DRAWN - AS	REVISED -	
PLOT SCALE = 40.000 ' / in.	CHECKED - JRK	REVISED -	
PLOT DATE = 6/23/2025	DATE - 05/01/2025	REVISED -	

STATE OF ILLINOIS
DIVISION OF TRANSPORTATION

I-74 OVER STONY CREEK
PROPOSED EROSION CONTROL AND FINAL RESTORATION PLAN

SCALE: 1" = 20' | SHEET 2 OF 3 SHEETS | STA. 1284+00 TO STA. 1289+00

F.A.I. RTE.	SECTION	COUNTY	TOTAL SHEETS	SHEET NO.
74	(92-9)BR	VERMILION	87	30

CONTRACT NO. 70D66

ILLINOIS | FED. AID PROJECT

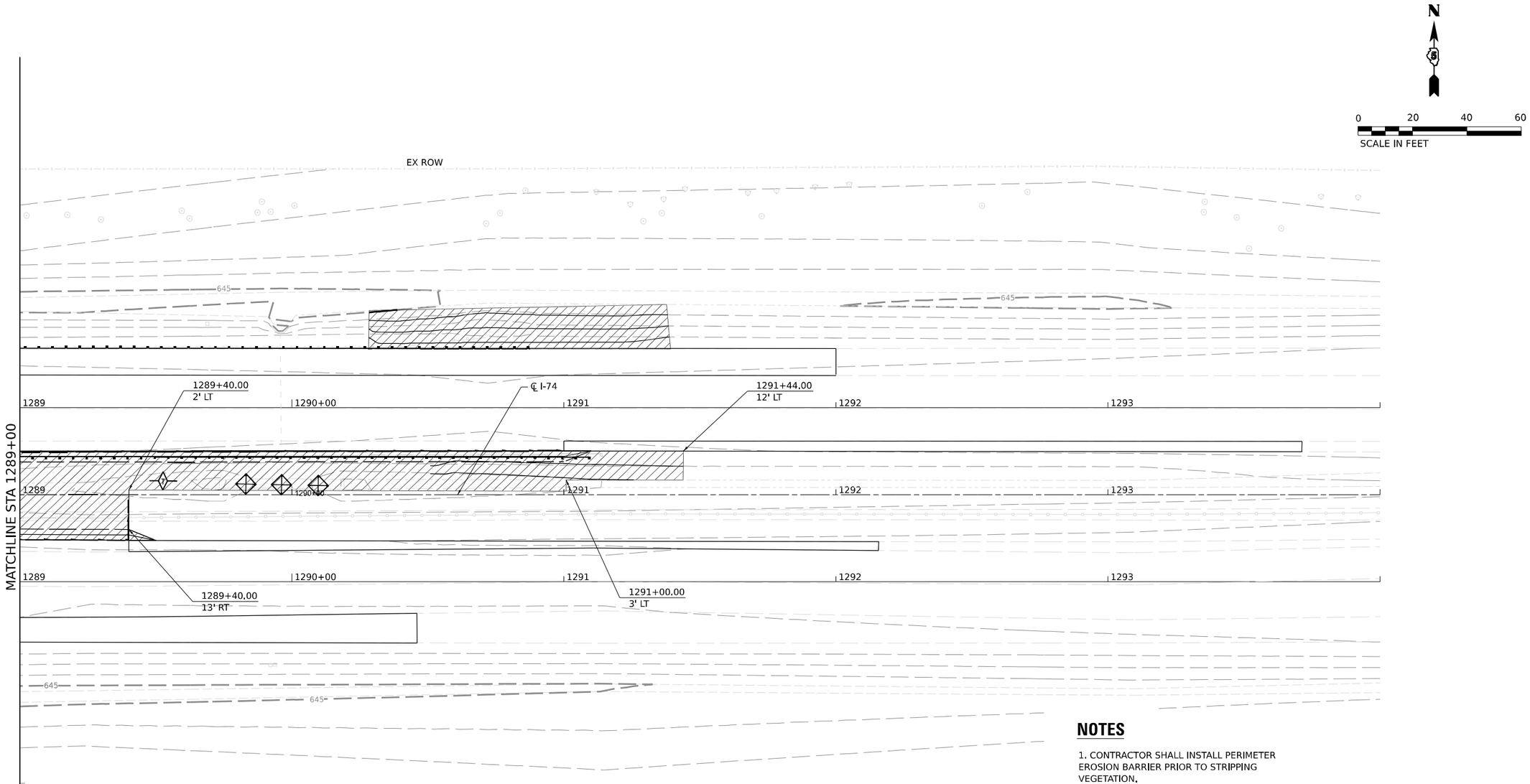

LEGEND

- LIMITS OF CONSTRUCTION
- PERMIETER EROSION BARRIER
- SEDIMENT CONTROL SILT CURTAIN
- RIPRAP
  FILTER FABRIC
- EROSION CONTROL BLANKET
  CLASS 2A SEEDING
- INLET PROTECTION
- TEMPORARY DITCH CHECKS

NOTES

1. CONTRACTOR SHALL INSTALL PERIMETER EROSION BARRIER PRIOR TO STRIPPING VEGETATION.

2. RIP RAP SHALL BE PLACED IN SUCH A WAY THAT THERE IS POSITIVE DRAINAGE FROM AGGREGATE OR PAVED SHOULDER TO DRAINAGE SWALE.

3. TEMPORARY EROSION CONTROL BLANKET SHALL BE PLACED AFTER MOT STAGE I AND STAGE II GRADING. HEAVY DUTY EROSION CONTROL BLANKET AND EROSION CONTROL BLANKET SHALL BE PLACED FOR FINAL SEEDING.

6/23/2025 10:28:21 AM
P:\Projects\22000\22351\C_DESIGN\01_Discipline\a_Civil\Working\Sheets\D5_70D66_Sht_Erosion03.dgn

EPSTEIN

USER NAME = asharghi	DESIGNED - AS	REVISED -	
	DRAWN - AS	REVISED -	
PLOT SCALE = 40.000 ' / in.	CHECKED - JRK	REVISED -	
PLOT DATE = 6/23/2025	DATE - 05/01/2025	REVISED -	

STATE OF ILLINOIS
DIVISION OF TRANSPORTATION

I-74 OVER STONY CREEK
PROPOSED EROSION CONTROL AND FINAL RESTORATION PLAN

SCALE: 1" = 20' | SHEET 3 OF 3 SHEETS | STA. 1284+00 TO STA. 1289+00

F.A.I. RTE.	SECTION	COUNTY	TOTAL SHEETS	SHEET NO.
74	(92-9)BR	VERMILION	87	31
		CONTRACT NO. 70D66		
		ILLINOIS	FED. AID PROJECT	

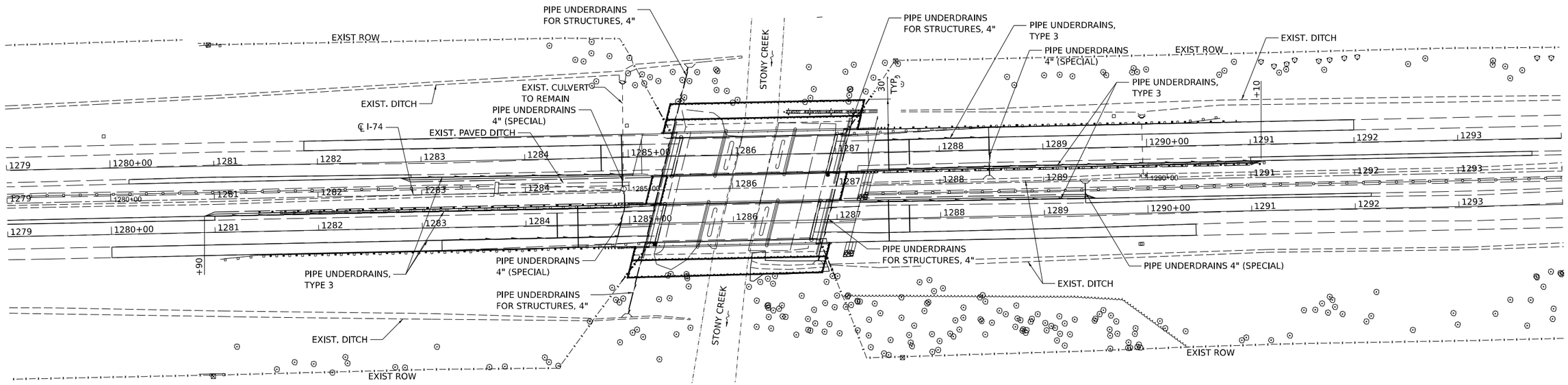

NOTES

1. ALL 4" PERFORATED PIPE UNDERDRAINS SHALL OUTLET TO DITCHES, SEE STRUCTURAL PLANS FOR LOCATION AND DETAILS
2. CONTRACTOR SHALL VERIFY EXISTING PIPE LOCATION AND INVERT ELEVATION PRIOR TO CONSTRUCTION.

LEGEND

LIMITS OF PROPOSED RIPRAP

DRAINAGE PLAN

N

0 50 100 150

SCALE IN FEET

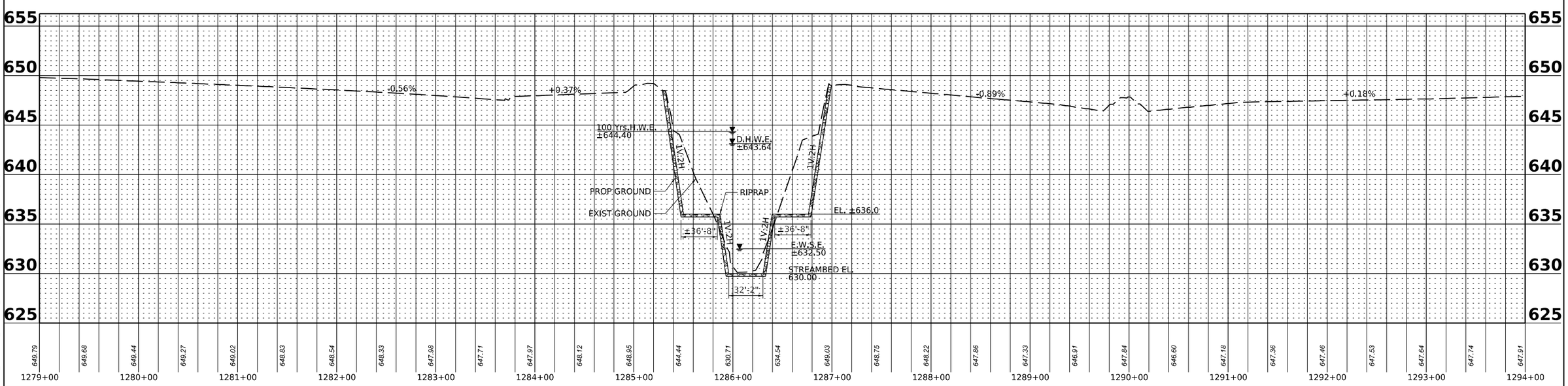

EPSTEIN	USER NAME = asharghi	DESIGNED - AS	REVISED -
		DRAWN - AS	REVISED -
	PLOT SCALE = 100.000 ' / in.	CHECKED - JRK	REVISED -
	PLOT DATE = 6/23/2025	DATE - 05/01/2025	REVISED -

STATE OF ILLINOIS
DIVISION OF TRANSPORTATION

I-74 OVER STONY CREEK
PROPOSED DRAINGAE PLAN AND PROFILE

SCALE: SHEET 1 OF 1 SHEETS STA. TO STA.

F.A.I. RTE.	SECTION	COUNTY	TOTAL SHEETS	SHEET NO.
74	(92-9)BR	VERMILION	87	32

CONTRACT NO. 70D66

ILLINOIS FED. AID PROJECT

6/23/2025 10:28:22 AM
P:\Projects\2300\22351C_DESIGN\01_Disciplines_Civil\Working\Sheets\D5_70D66_Sht_Drainage.dgn

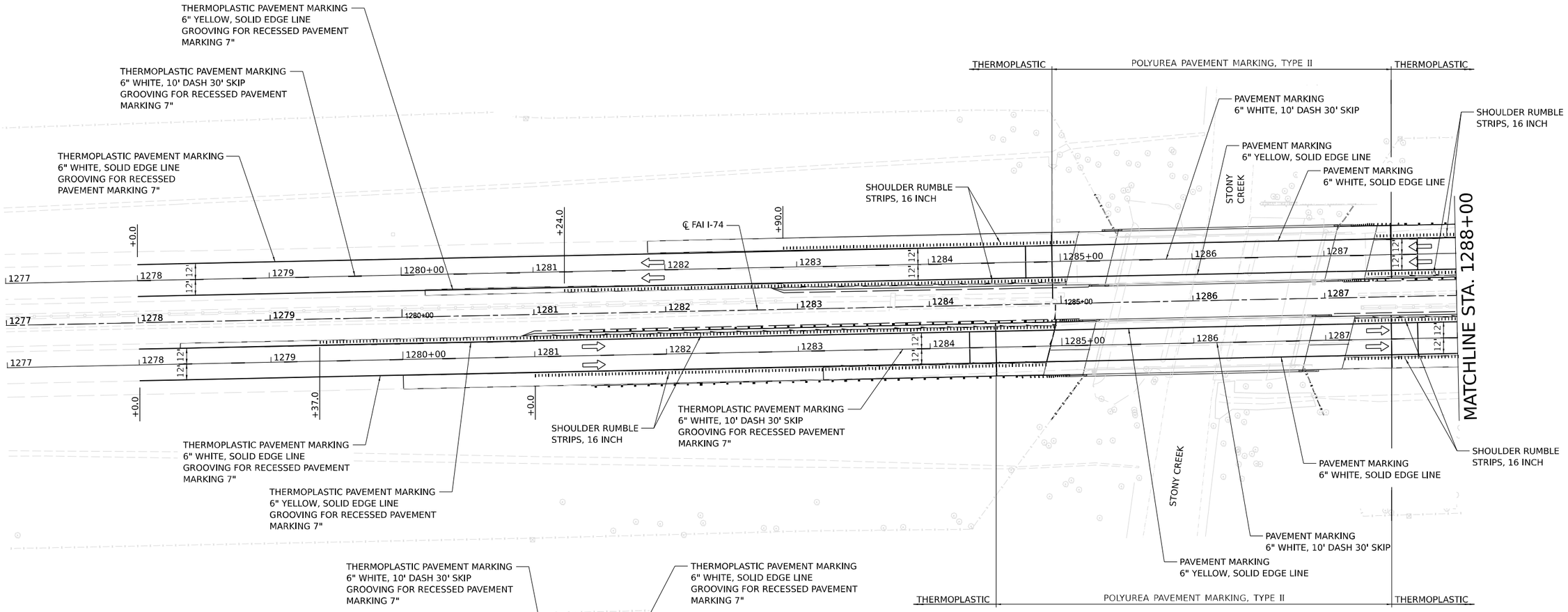

NOTE:

ALL STRIPING REMOVED FOR MAINTENANCE OF TRAFFIC SHALL BE REPLACED

6/23/2025 10:28:23 AM
P:\Projects\22000\22351_DESIGN\01_Discipline\a_Civil\Working\Sheets\D5_70D66_Sht_PMK.dgn\.dgn

EPSTEIN	USER NAME = asharghi	DESIGNED - AS	REVISED -
		DRAWN - AS	REVISED -
	PLOT SCALE = 80.0000 ' / in.	CHECKED - JRK	REVISED -
	PLOT DATE = 6/23/2025	DATE - 05/01/2025	REVISED -

STATE OF ILLINOIS
DIVISION OF TRANSPORTATION

I-74 OVER STONY CREEK
SIGNING AND PAVEMENT MARKING

SCALE: | SHEET 1 OF 1 SHEETS | STA. TO STA.

F.A.I. RTE.	SECTION	COUNTY	TOTAL SHEETS	SHEET NO.
74	(92-9)BR	VERMILION	87	33

CONTRACT NO. 70D66

ILLINOIS | FED. AID PROJECT

BENCHMARK: Point #2712 - Chiseled "□" on top of SE abutment end wall of SN 092-0002 (WB), Station 1286+92.00, Offset 11.29' Lt., Elevation 648.42

EXISTING STRUCTURE: Structure Numbers 092-0001 (EB) and 092-0002 (WB) were originally built in 1959 as FAI 5, Section 92-9B, Station 1286+17. In 1989 the curb and metal rail were removed and replaced with a Type F parapet. The bituminous surface course and membrane waterproofing system were removed and replaced in 1989 and 2011. The existing dual structures each consist of three simple span PPC I-Beam and non-composite reinforced concrete deck superstructue with hammerhead piers and pile bent spill-thru abutments. Overall length is 154'-7⅞" and clear roadway width is 34'-0". Traffic to be maintained using staged construction.

SALVAGE: None

① Est. Top of Rock
Elev. 614.5 (EB)
Elev. 629.0 (WB)

② Steel H-piles set in rock.

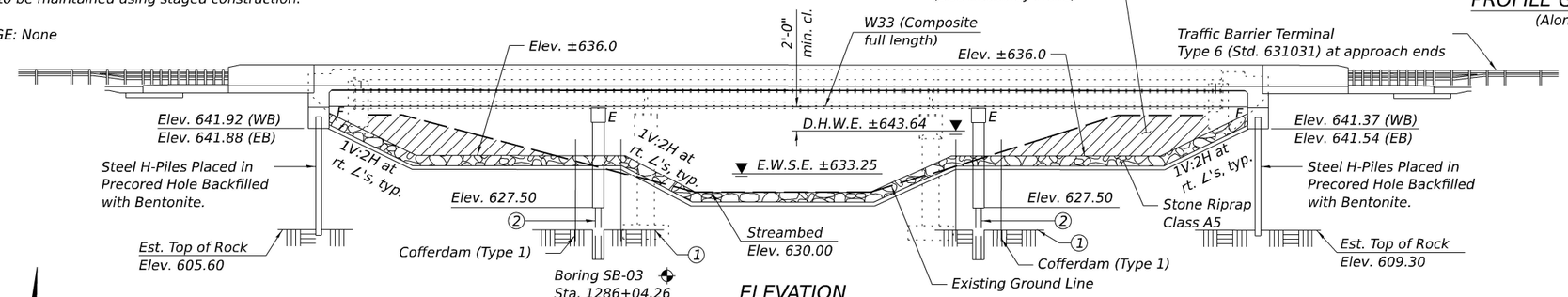

ELEVATION

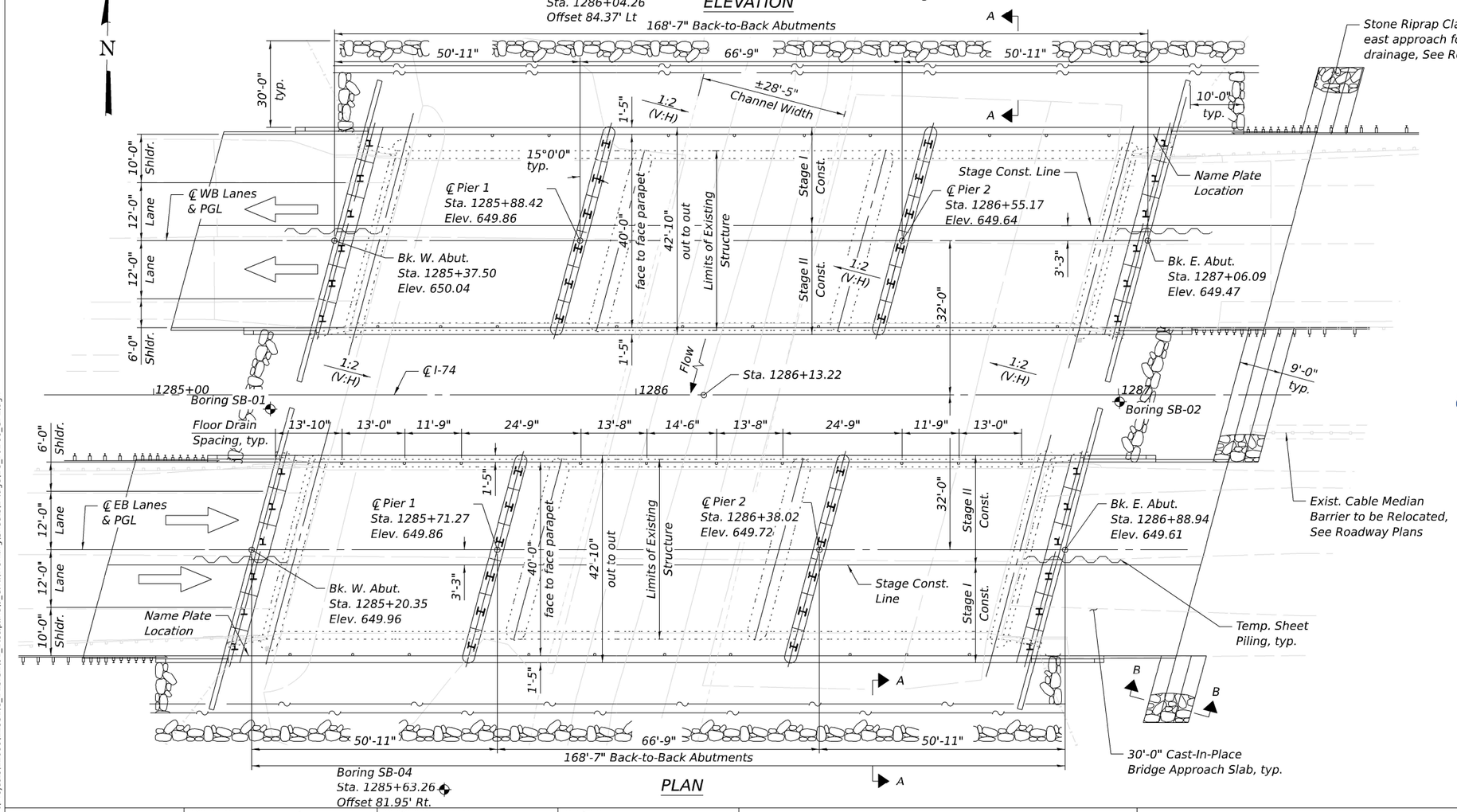

PLAN

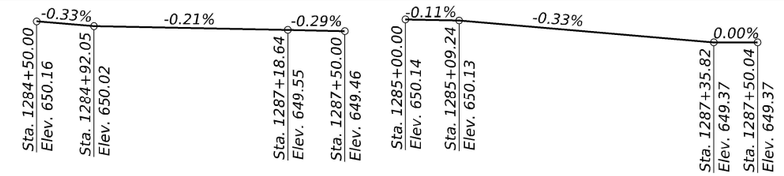

PROFILE GRADE - I-74 (EB)

(Along ℄ EB Lanes)

PROFILE GRADE - I-74 (WB)

(Along ℄ WB Lanes)

The Profile Grades show the final grade after grinding.

Note:
Up to ¼" to be ground off the bridge deck and approach slabs.
Elevations shown in Plan represent elevations after grinding.
For Section A-A and Section B-B, see sheet S-2.

DESIGN SPECIFICATIONS

2020 AASHTO LRFD Bridge Design Specifications, 9th Edition

LOADING HL-93

Allow 50#/sq. ft. for future wearing surface.

DESIGN STRESSES

FIELD UNITS

f'c = 3,500 psi
f'c = 4,000 psi (Superstructure)
fy = 60,000 psi (Reinforcement)
fy = 50,000 psi (structural steel) (M270 Grade 50)
All Structural Steel shall be galvanized

SEISMIC DATA

Seismic Performance Zone (SPZ) = 1
Design Spectral Acceleration at 1.0 sec. (SD1) = 0.094g
Design Spectral Acceleration at 0.2 sec. (SDS) = 0.173g
Soil Site Class = C

TIMOTHY C. GALL
081-006644
LICENSED STRUCTURAL ENGINEER
STATE OF ILLINOIS

Expires: 11/30/2026
Date: 5/1/2025

APPROVED
For Structural Adequacy Only
Engineer of Bridges & Structures

Range 13 W, 2nd P.M.

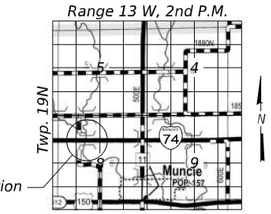

LOCATION SKETCH

GENERAL PLAN & ELEVATION
I-74 OVER STONY CREEK
F.A.I. ROUTE 74 - SECTION (92-9)BR
VERMILION COUNTY
STATION 1286+13.22
STRUCTURE NO. 092-0210 (E.B.)
STRUCTURE NO. 092-0211 (W.B.)

MODEL: Default
FILE NAME: P:\Projects\22000\22351C_DESIGN\01_Discipline\a_Civil\WorkingSheets\Bridge\D5_70D66_GPE.dgn

EPSTEIN

USER NAME = asharghi	DESIGNED - AS	REVISED -	
	CHECKED - TCG	REVISED -	
PLOT SCALE = 25.000 ' / in.	DRAWN - AS	REVISED -	
PLOT DATE = 6/23/2025	CHECKED - TCG	REVISED -	

STATE OF ILLINOIS
DEPARTMENT OF TRANSPORTATION

GENERAL PLAN AND ELEVATION
STRUCTURE NO. 092-0210 (E.B.) & 092-0211 (W.B.)

SHEET S-1 OF S-40 SHEETS

F.A. RTE.	SECTION	COUNTY	TOTAL SHEETS	SHEET NO.
74	(92-9)BR	VERMILION	87	34
		CONTRACT NO. 70D66		
	ILLINOIS	FED. AID PROJECT		

6/23/2025 10:28:42 AM

GENERAL NOTES

1. All structural steel shall be galvanized. See Special Provision for "Hot Dip Galvanizing for Structural Steel".

2. Calculated weight of Structural Steel = 327,580 lbs. (M270 Grade 50)
   = 43,290 lbs. (M270 Grade 36)

3. No field welding is permitted except as specified in the contract documents.

4. Fasteners shall be ASTM F 3125 Grade A325 Type 1. Fasteners shall be hot dip galvanized. See Special Provision for "Hot Dip Galvanizing for Structural Steel." Bolts 7/8 in. diameter, holes 15/16 in. diameter, unless otherwise noted.

5. Reinforcement bars designated (E) shall be epoxy coated.

6. If the Contractor elects to use cantilever forming brackets on the exterior beams or girders, the brackets shall be placed at the same locations as required for the hardwood blocks in Article 503.06(b) of the Standard Specifications. If additional cantilever forming brackets are required, hardwood blocking shall be wedged between the exterior and first interior beam at each of these additional bracket locations.

7. Bearing seat surfaces shall be constructed or adjusted to the designated elevations within a tolerance of 1/8 in. (0.01 ft.). Adjustment shall be made either by grinding the surface or by shimming the bearings.

8. Layout of the slope protection system may be varied to suit ground conditions in the field as directed by the Engineer.

WATERWAY INFORMATION

Existing Overtopping Elev. 648.96 @ Sta. 1290+73.0
Drainage Area = 45.8 sq. mi. Proposed Overtopping Elev. 648.96 @ Sta. 1290+73.0

Flood	Freq. Yr.	Discharge C.F.S.	Opening Ft² Exist.	Opening Ft² Prop.	Natural H.W.E.	Head - Ft. Exist.	Head - Ft. Prop.	Headwater El. Exist.	Headwater El. Prop.
Ten-Year	10	2,960	621	780	642.08	0.15	0.0	642.23	642.08
Design	50	4,710	799	974	643.64	0.33	0.12	643.97	643.76
Base	100	5,480	872	1,050	644.21	0.43	0.19	644.64	644.40
Overtopping	200	5,948	915	1,093	644.53	0.49	0.24	645.02	644.77
Max. Calc.	500	7,350	1,027	1,213	645.42	0.74	0.35	646.16	645.77

10-Year Velocity through Existing Structure = 3.16 fps
10-Year Velocity through Proposed Structure = 2.92 fps

DESIGN SCOUR ELEVATION TABLE

S.N. 092-0210 (E.B.)

Event / Limit State	Design Scour Elevations (ft.) W. Abut.	Pier 1	Pier 2	E. Abut.	Item 113
Q100	642.00	625.0	625.0	641.53	5
Q200	642.00	624.7	624.7	641.53	
Design	642.00	625.0	625.0	641.53	
Check	642.00	624.7	624.7	641.53	

DESIGN SCOUR ELEVATION TABLE

S.N. 092-0211 (W.B.)

Event / Limit State	Design Scour Elevations (ft.) W. Abut.	Pier 1	Pier 2	E. Abut.	Item 113
Q100	641.92	625.0	625.0	641.48	5
Q200	641.92	624.7	624.7	641.48	
Design	641.92	625.0	625.0	641.48	
Check	641.92	624.7	624.7	641.48	

INDEX OF SHEETS

TOTAL BILL OF MATERIAL

ITEM	UNIT	SUPER	SUB	TOTAL
Stone Riprap, Class A5	Sq Yd		3,673	3,673
Filter Fabric	Sq Yd		3,744	3,744
Removal Of Existing Structures No. 1	Each	1		1
Removal Of Existing Structures No. 2	Each	1		1
Structure Excavation	Cu Yd		520	520
Cofferdam Excavation	Cu Yd		675	675
Rock Excavation For Structure	Cu Yd		60	60
Cofferdam (Type 1) (Location-1)	Each		1	1
Cofferdam (Type 1) (Location-2)	Each		1	1
Cofferdam (Type 1) (Location-3)	Each		1	1
Cofferdam (Type 1) (Location-4)	Each		1	1
Floor Drains	Each	40		40
Concrete Structures	Cu Yd		439.7	439.7
Concrete Superstructure	Cu Yd	473.9		473.9
Protective Coat	Sq Yd	2,402		2,402
Concrete Superstructure (Approach Slab)	Cu Yd	236.8		236.8
Furnishing And Erecting Structural Steel	L Sum	1		1
Stud Shear Connectors	Each	10,404		10,404
Reinforcement Bars, Epoxy Coated	Pound	239,300	41,260	280,560
Bar Splicers	Each	1,640	384	2,024
Furnishing Steel Piles HP12x63	Foot		904	904
Furnishing Steel Piles HP14x73	Foot		710	710
Driving Piles	Foot		904	904
Test Pile Steel HP12x63	Each		2	2
Drilling And Setting Piles (In Soil)	Cu Ft		491	491
Drilling And Setting Piles (In Rock)	Cu Ft		547	547
Name Plates	Each	2		2
Anchor Bolts, 1"	Each	96		96
Temporary Sheet Piling	Sq Ft		4,464	4,464
Granular Backfill For Structures	Cu Yd		276	276
Geocomposite Wall Drain	Sq Yd		134	134
Pipe Underdrains For Structures, 4"	Foot		382	382
Bridge Deck Grooving (Longitudinal)	Sq Yd	1,209		1,209
Bar Terminators	Each	188	864	1,052
Diamond Grinding (Bridge Section)	Sq Yd	1,829		1,829

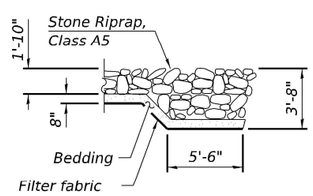

SECTION A-A

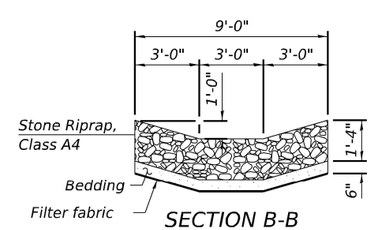

SECTION B-B
(See Roadway Plans)

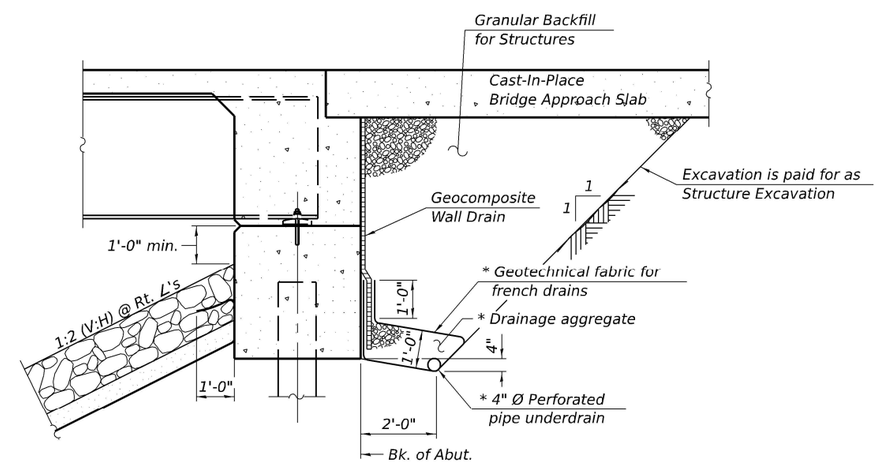

SECTION THRU INTEGRAL ABUTMENT
(Horiz. dim. at Rt. ∠'s)
*Included in the cost of Pipe Underdrains for Structures.

Note:
All drainage system components shall extend to 2'-0" from the end of each wingwall except an outlet pipe shall extend until intersecting with the side slopes. The pipes shall drain into concrete headwalls. (See Article 601.05 of the Standard Specifications and Highway Standard 601101).

STA. 1286+04.65
BUILT 20 BY
STATE OF ILLINOIS
F.A.I. RT. 74 -SEC. (92-9)BR
LOADING HL-93
STR. NO. 092-0210

STA. 1286+21.80
BUILT 20 BY
STATE OF ILLINOIS
F.A.I. RT. 74 -SEC. (92-9)BR
LOADING HL-93
STR. NO. 092-0211

NAME PLATES
See Std. 515001

MODEL: Default
FILE NAME: P:\Projects\22000\22351C_DESIGN\01_Discipline\a_Civil\Working\Sheets\Bridge\D5_70D66_Data.dgn
7/22/2025 12:01:24 PM

EPSTEIN

USER NAME = asharghi	DESIGNED - AS	REVISED -	
	CHECKED - TCG	REVISED -	
PLOT SCALE = 0.167 ' / in.	DRAWN - AS	REVISED -	
PLOT DATE = 7/22/2025	CHECKED - TCG	REVISED -	

STATE OF ILLINOIS
DEPARTMENT OF TRANSPORTATION

GENERAL DATA
STRUCTURE NO. 092-0210 (E.B.) & 092-0211 (W.B.)
SHEET S-2 OF S-40 SHEETS

F.A. RTE.	SECTION	COUNTY	TOTAL SHEETS	SHEET NO.
74	(92-9)BR	VERMILION	87	35

CONTRACT NO. 70D66
ILLINOIS FED. AID PROJECT

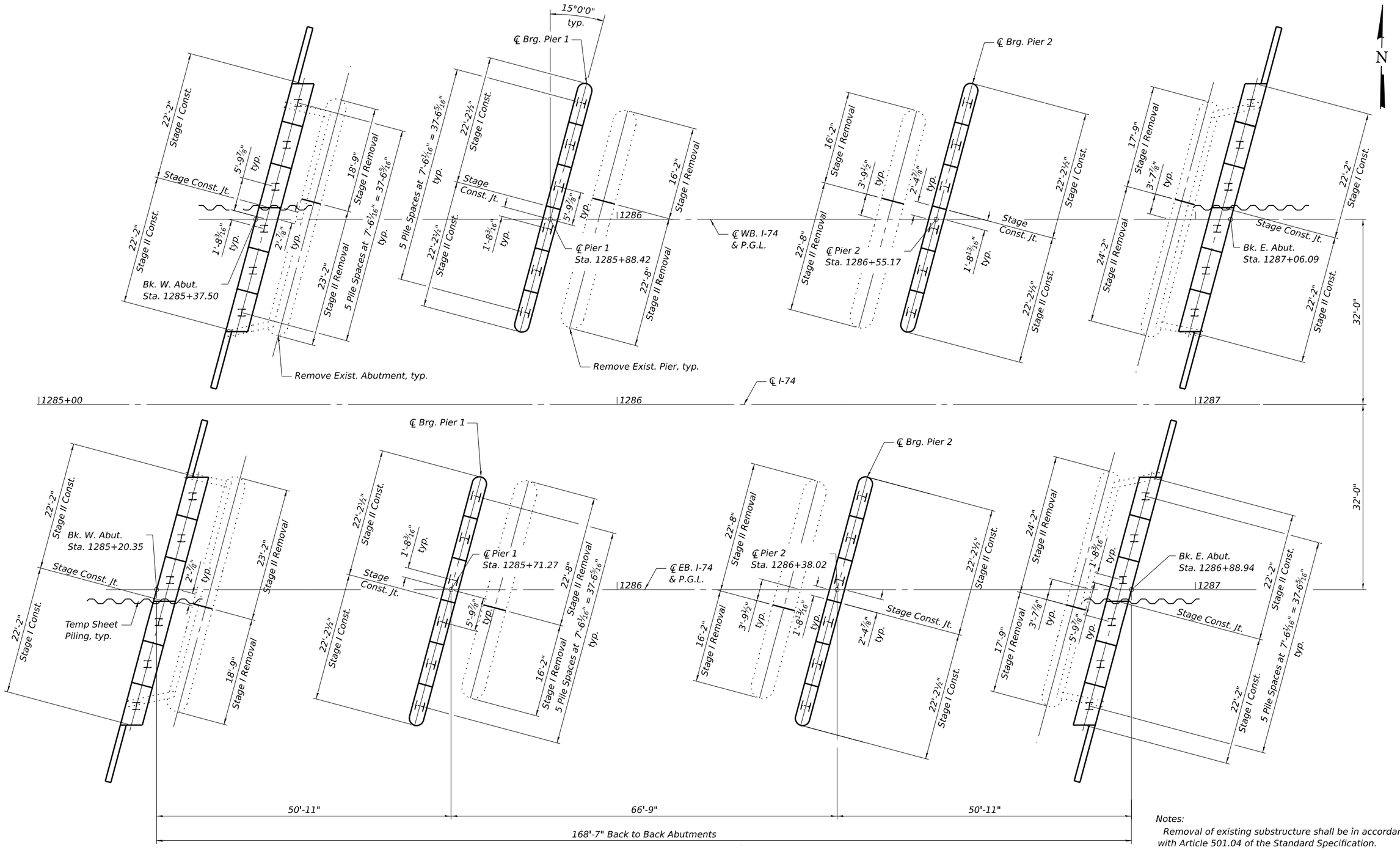

PLAN

Notes:
Removal of existing substructure shall be in accordance with Article 501.04 of the Standard Specification.
The stage construction and stage removal limits for superstructure and substructure occurred at different locations. See plan for relative dimension from P.G.L.

MODEL: Default
FILE NAME: P:\Projects\22000\22351C_DESIGN\01_Discipline\a_Civil\Working\Sheets\Bridge\D5_70D66_Sub Layout.dgn

EPSTEIN

USER NAME = asharghi	DESIGNED - AS	REVISED -	
	CHECKED - TCG	REVISED -	
PLOT SCALE = 16.000 ' / in.	DRAWN - AS	REVISED -	
PLOT DATE = 6/23/2025	CHECKED - TCG	REVISED -	

STATE OF ILLINOIS
DEPARTMENT OF TRANSPORTATION

SUBSTRUCTURE LAYOUT
STRUCTURE NO. 092-0210 (E.B.) & 092-0211 (W.B.)

SHEET S-3 OF S-40 SHEETS

F.A. RTE.	SECTION	COUNTY	TOTAL SHEETS	SHEET NO.
74	(92-9)BR	VERMILION	87	36
		CONTRACT NO. 70D66		
		ILLINOIS	FED. AID PROJECT	

6/23/2025 10:28:45 AM

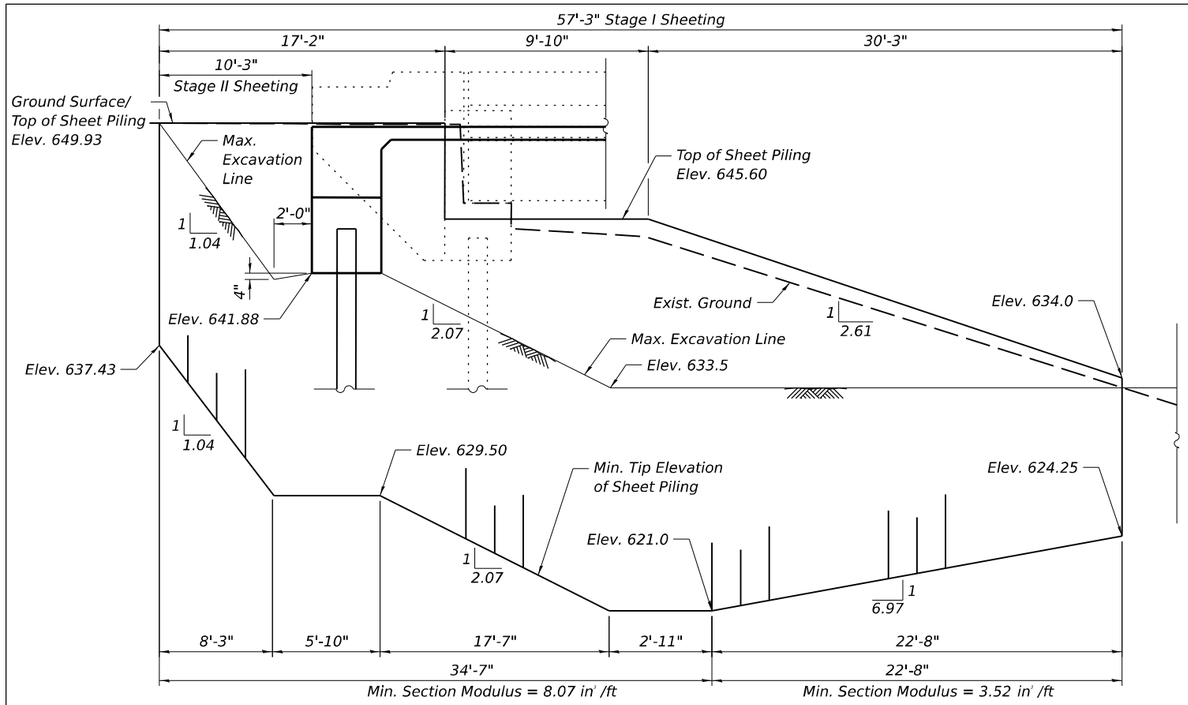

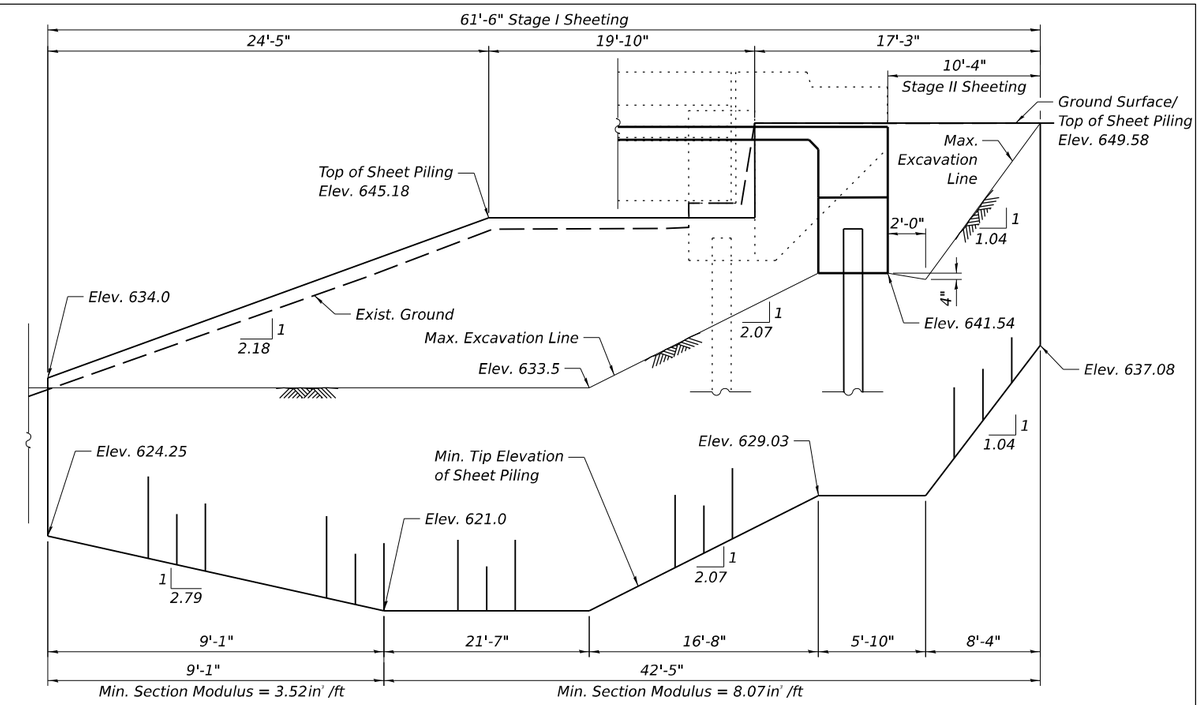

SN. 092-0210

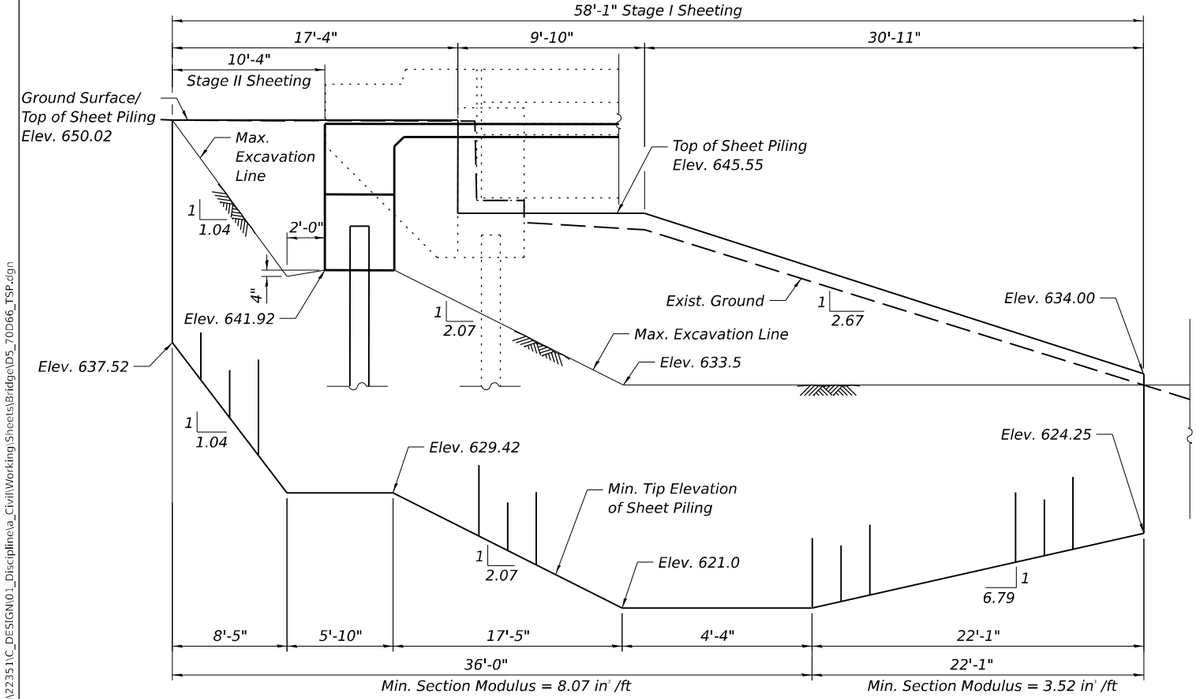

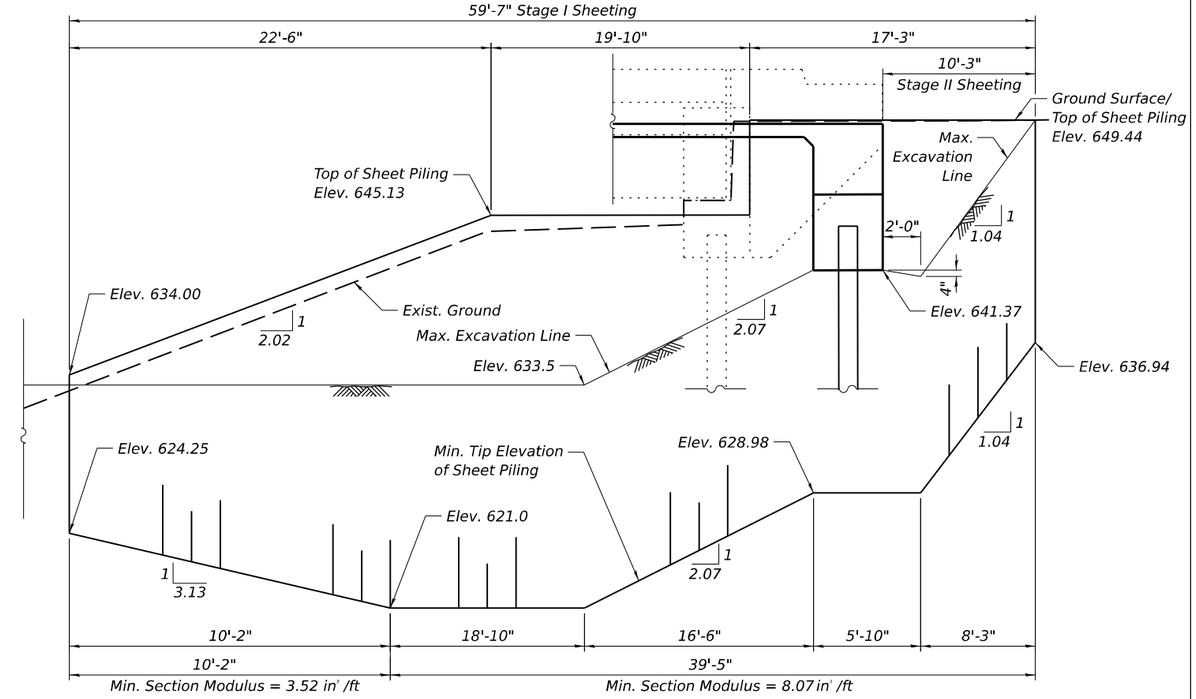

SN. 092-0211

Note:
If Contractor chooses to alter the temporary cantilevered sheet piling design requirements shown on the plans, a design submittal including plan details and calculations will be required for review and acceptance by the Engineer.

TEMPORARY SHEET PILING

MODEL: Default
FILE NAME: P:\Projects\22000\22351\C_DESIGN\01_Discipline\a_Civil\Working\Sheets\Bridge\D5_70D66_TSP.dgn

EPSTEIN

USER NAME = asharghi	DESIGNED - AS	REVISED -	
	CHECKED - TCG	REVISED -	
PLOT SCALE = 8.000 ' / in.	DRAWN - AS	REVISED -	
PLOT DATE = 6/23/2025	CHECKED - TCG	REVISED -	

STATE OF ILLINOIS
DEPARTMENT OF TRANSPORTATION

TEMPORARY SHEET PILING DETAILS
STRUCTURE NO. 092-0210 (E.B.) & 092-0211 (W.B.)

SHEET S-4 OF S-40 SHEETS

F.A. RTE.	SECTION	COUNTY	TOTAL SHEETS	SHEET NO.
74	(92-9)BR	VERMILION	87	37
		CONTRACT NO. 70D66		
	ILLINOIS	FED. AID PROJECT		

6/23/2025 10:28:46 AM

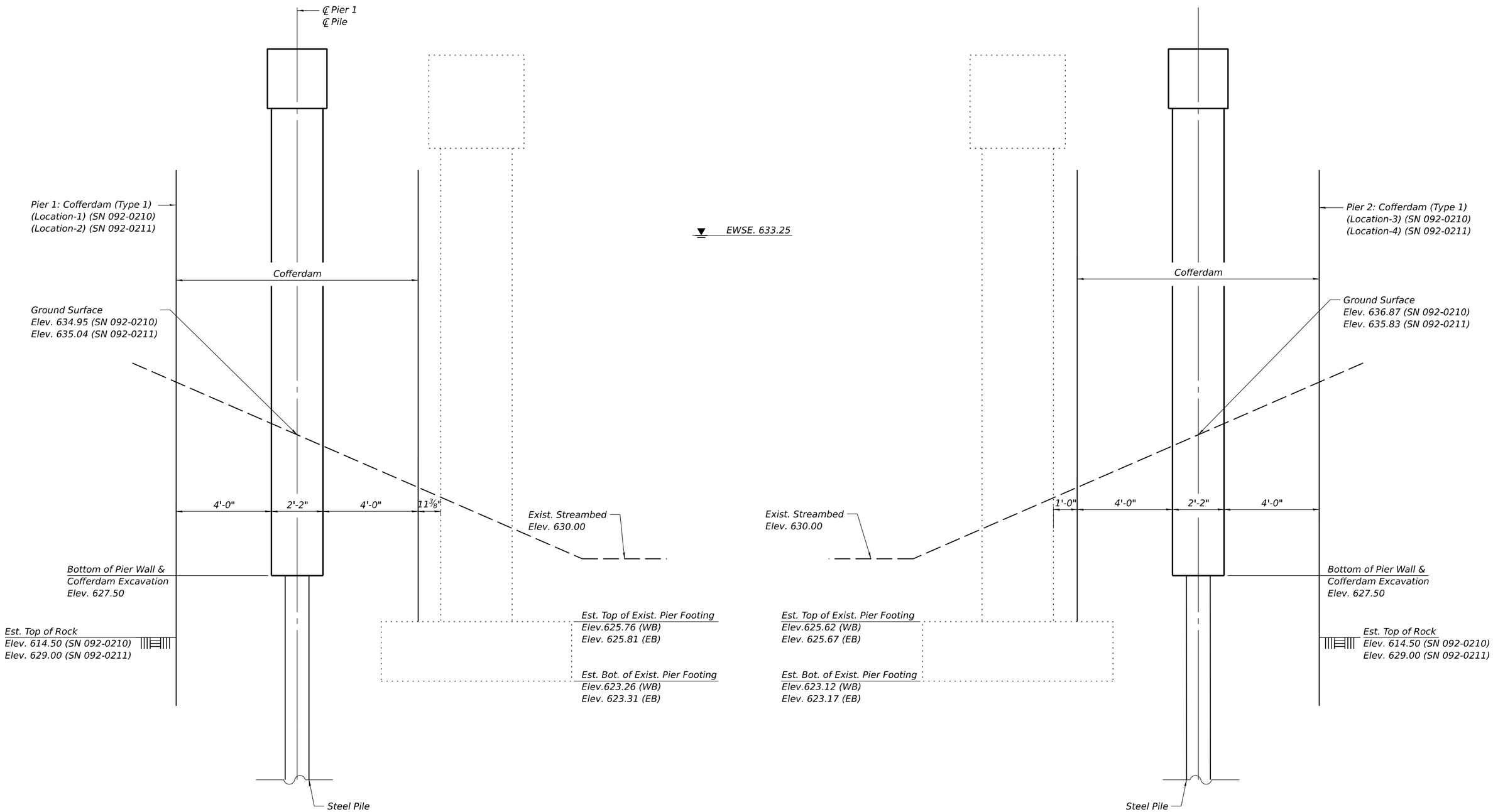

SECTION THRU COFFERDAM

MODEL: Default
FILE NAME: P:\Projects\22000\22351\C_DESIGN\01_Discipline\a_Civil\Working\Sheets\Bridge\D5_70D66_Co erdam.dgn

EPSTEIN

USER NAME = asharghi	DESIGNED - AS	REVISED -	
	CHECKED - TCG	REVISED -	
PLOT SCALE = 4,000 ' / in.	DRAWN - AS	REVISED -	
PLOT DATE = 6/23/2025	CHECKED - TCG	REVISED -	

STATE OF ILLINOIS
DEPARTMENT OF TRANSPORTATION

COFFERDAM DETAILS
STRUCTURE NO. 092-0210 (E.B.) & 092-0211 (W.B.)

SHEET S-5 OF S-40 SHEETS

F.A. RTE.	SECTION	COUNTY	TOTAL SHEETS	SHEET NO.
74	(92-9)BR	VERMILION	87	38

CONTRACT NO. 70D66

ILLINOIS | FED. AID PROJECT

6/23/2025 10:28:47 AM

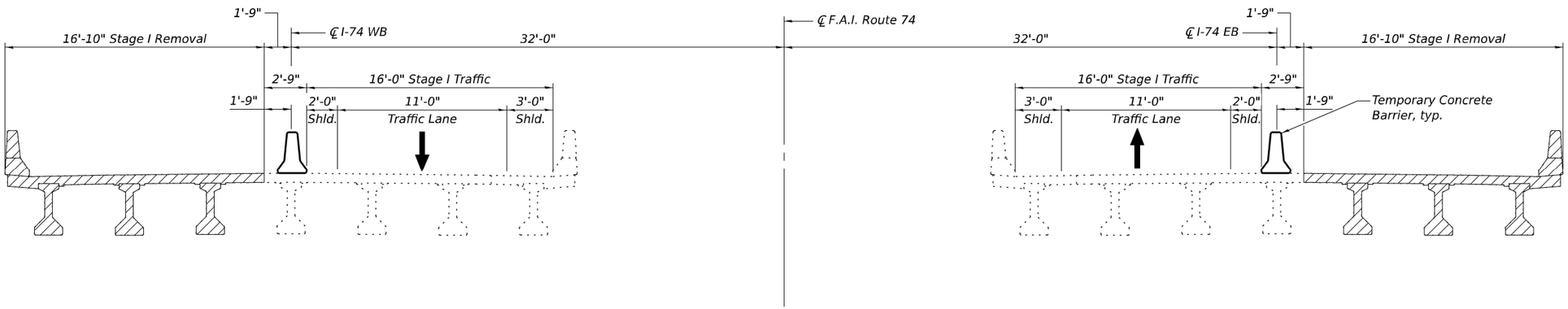

STAGE I REMOVAL

(Looking East)

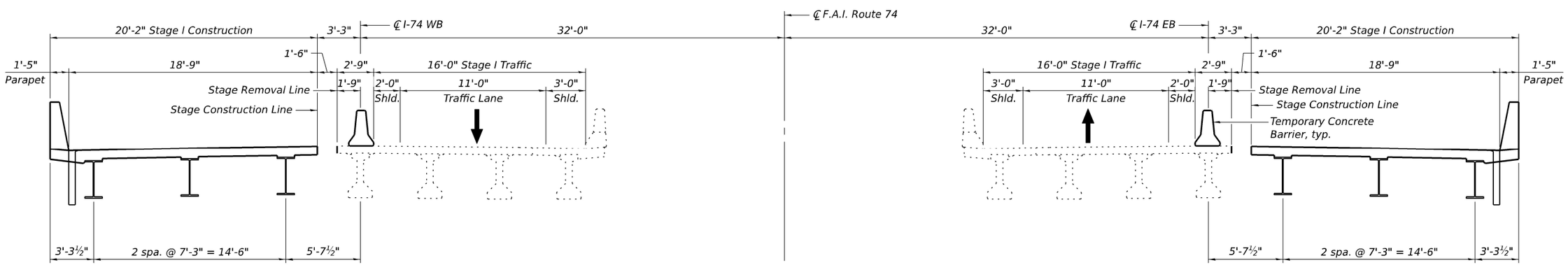

STAGE I CONSTRUCTION

(Looking East)

Notes:

For Temporary Concrete Barrier Details, see sheet S-8 .

Hatched area indicates Removal of Existing Structures.

For quantity of Temporary Concrete Barrier, see Roadway Plans

The stage construction and stage removal limits for superstructure and substructure occurred at different locations. See plan for relative dimension from P.G.L.

MODEL: Default
FILE NAME: P:\Projects\22000\2235 IIC_DESIGN\01_Discipline\a_Civil\WorkingSheets\Bridge\d5_70d66_Stage Const1.dgn

6/23/2025 10:28:47 AM

EPSTEIN

USER NAME = asharghi	DESIGNED - AS	REVISED -	
	CHECKED - TCG	REVISED -	
PLOT SCALE = 8:0.0000 ':" / in.	DRAWN - AS	REVISED -	
PLOT DATE = 6/23/2025	CHECKED - TCG	REVISED -	

STATE OF ILLINOIS
DEPARTMENT OF TRANSPORTATION

STAGE CONSTRUCTION DETAILS
STRUCTURE NO. 092-0210 (E.B.) & 092-0211 (W.B.)

SHEET S-6 OF S-40 SHEETS

F.A. RTE.	SECTION	COUNTY	TOTAL SHEETS	SHEET NO.
74	(92-9)BR	VERMILION	87	39
		CONTRACT NO. 70D66		
	ILLINOIS	FED. AID PROJECT		

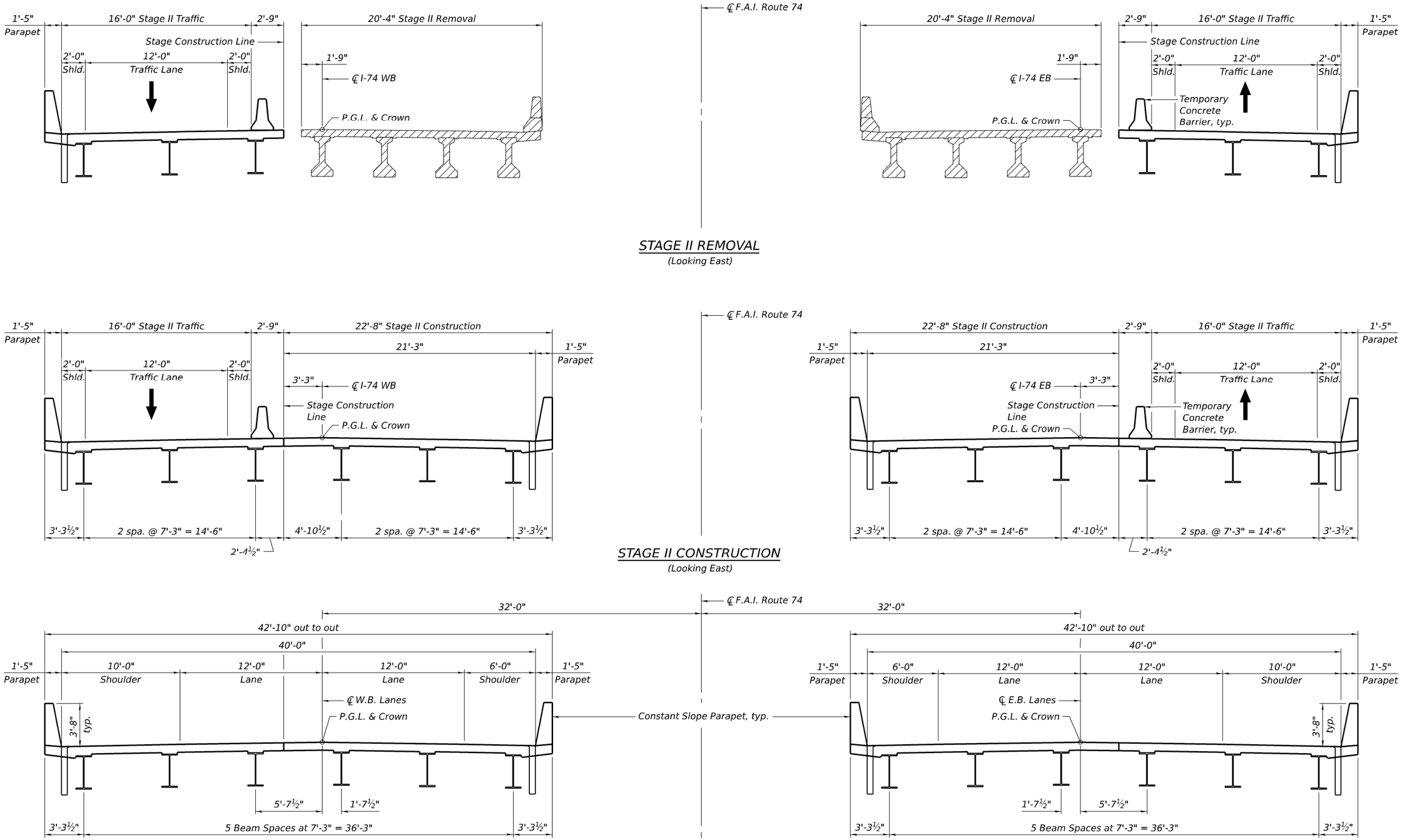

Notes:
For Temporary Concrete Barrier Details, see sheet S-8 .
Hatched area indicates Removal of Existing Structures.
For quantity of Temporary Concrete Barrier, see Roadway Plans.
The stage construction and stage removal limits for superstructure and substructure occurred at different locations. See plan for relative dimension from P.G.L.

MODEL: Default
FILE NAME: P:\Projects\22000\22351C_DESIGN\01_Discipline\a_Civil\Working\Sheets\Bridge\d5_70d66_Stage_Const2.dgn
6/23/2025 10:28:48 AM

EPSTEIN

USER NAME = asharghi	DESIGNED - AS	REVISED -	
	CHECKED - TCG	REVISED -	
PLOT SCALE = 8:0.0000 ':" / in.	DRAWN - AS	REVISED -	
PLOT DATE = 6/23/2025	CHECKED - TCG	REVISED -	

STATE OF ILLINOIS
DEPARTMENT OF TRANSPORTATION

STAGE CONSTRUCTION DETAILS
STRUCTURE NO. 092-0210 (E.B.) & 092-0211 (W.B.)

SHEET S-7 OF S-40 SHEETS

F.A. RTE.	SECTION	COUNTY	TOTAL SHEETS	SHEET NO.
74	(92-9)BR	VERMILION	87	40
		CONTRACT NO. 70D66		
		ILLINOIS	FED. AID PROJECT	

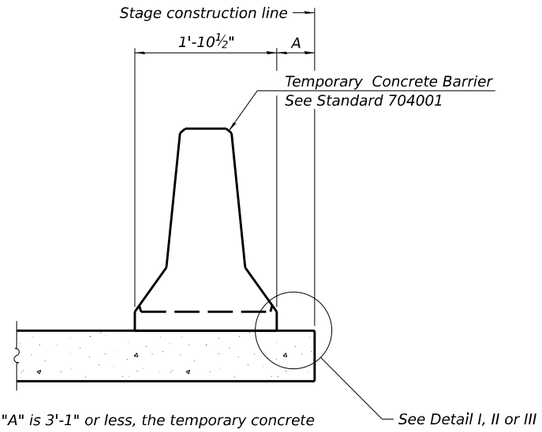

When "A" is 3'-1" or less, the temporary concrete barrier shall be restrained to the new slab according to Detail I, II or III. No restraint is required when "A" is greater than 3'-1".

NEW SLAB OR NEW DECK BEAM

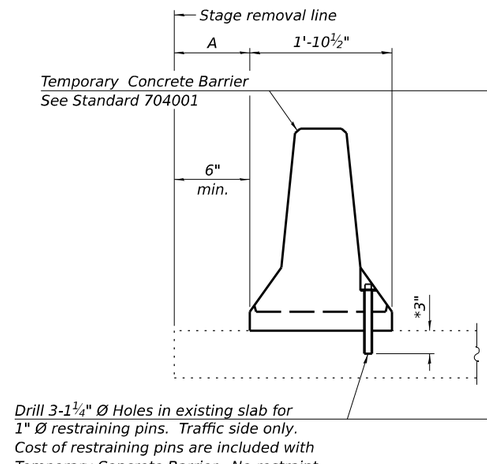

EXISTING SLAB

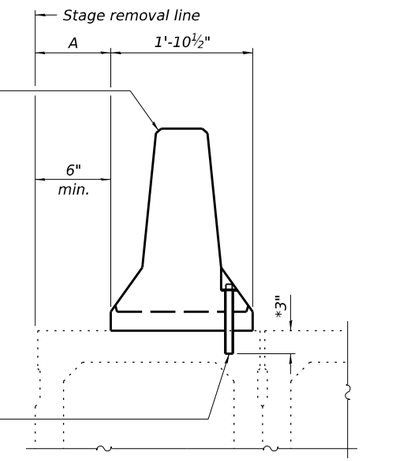

* When hot-mix asphalt wearing surface is present, embedment shall be 3" plus the wearing surface depth.

EXISTING DECK BEAM

SECTIONS THRU SLAB OR DECK BEAM

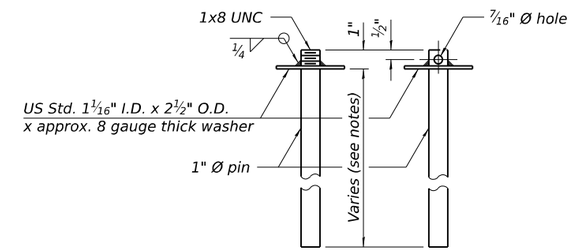

RESTRAINING PIN

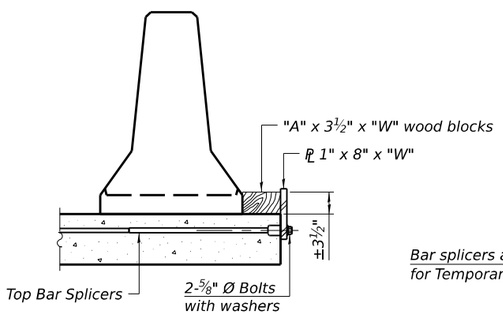

DETAIL I

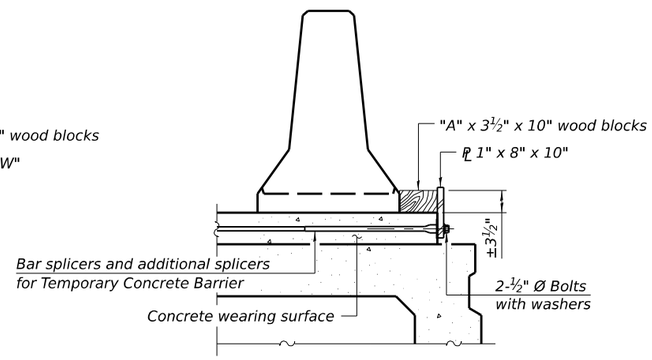

DETAIL II

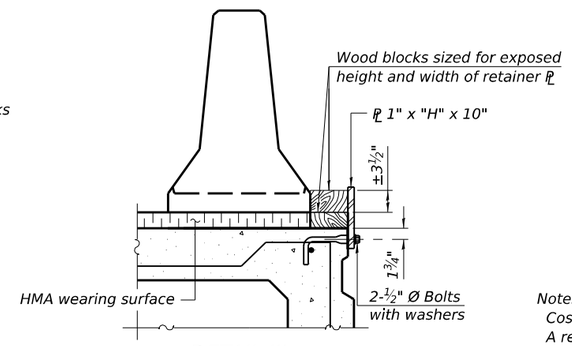

DETAIL III

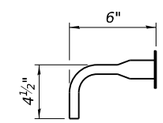

BAR SPLICER FOR #4 BAR - DETAIL III

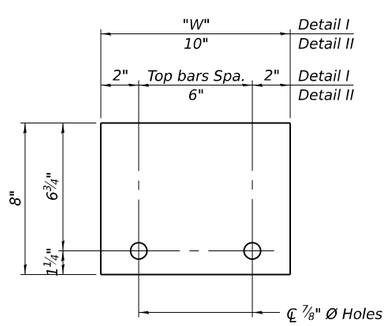

STEEL RETAINER PL 1" x 8" x "W"

(Detail I and II)

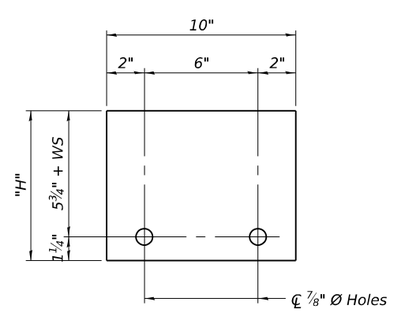

STEEL RETAINER PL 1" x "H" x 10"

(Detail III)

Notes:

Cost of retainer assembly is included with Temporary Concrete Barrier.

A retainer assembly shall be located at the approximate ℄ of each temporary concrete barrier.

The retainer plate shall not be removed until the concrete on the adjacent stage is ready to be poured. For Detail III applications the retainer plate shall not be removed until just prior to placing the adjacent beam.

When the 'A' dimension is less than 1½", the wood block shall be omitted and the barrier shall be placed in direct contact with the steel retainer plate. For deck beam applications the minimum required 'A' distance is 6" to accommodate the shear key clamping device.

Detail I - Installation for a new bridge deck or bridge slab.

Detail II - Installation for a new deck beam with an initial concrete wearing surface. Additional bar splicers shall be provided at 6'-0" centers and paired with the bar splicers of the concrete wearing surface reinforcement to accommodate the installation of the retainer assemblies. The cost of the additional bar splicers is included with the concrete wearing surface.

Detail III - Installation for a new deck beam with no initial wearing surface or with an initial hot-mix asphalt (HMA) wearing surface present. The deck beam directly beneath the temporary concrete barrier shall be fabricated with bar splicer inserts in the side of the beam, as detailed, to accommodate the installation of the retainer assemblies. A pair of bar splicers, 6" apart, shall be placed at 6'-0" centers along the length of the beam. The cost of the bar splicers is included with the deck beam.

RAILING CRITERIA

NCHRP 350 Test Level	3
Railing Weight (plf)	440

R-27

5-15-2023

MODEL: Default
FILE NAME: P:\Projects\22000\22351C_DESIGN\01_Discipline\a_Civil\Working\Sheets\Bridge\D5_70D66_Sht_TCB.dgn

6/23/2025 10:28:49 AM

EPSTEIN

USER NAME = asharghi	DESIGNED - AS	REVISED -	
	CHECKED - TCG	REVISED -	
PLOT SCALE = 0.167 ' / in.	DRAWN - AS	REVISED -	
PLOT DATE = 6/23/2025	CHECKED - TCG	REVISED -	

STATE OF ILLINOIS
DEPARTMENT OF TRANSPORTATION

TEMPORARY CONCRETE BARRIER
STRUCTURE NO. 092-0210 (E.B.) & 092-0211 (W.B.)

SHEET S-8 OF S-40 SHEETS

F.A. RTE.	SECTION	COUNTY	TOTAL SHEETS	SHEET NO.
74	(92-9)BR	VERMILION	87	41
		CONTRACT NO. 70D66		
		ILLINOIS	FED. AID PROJECT	

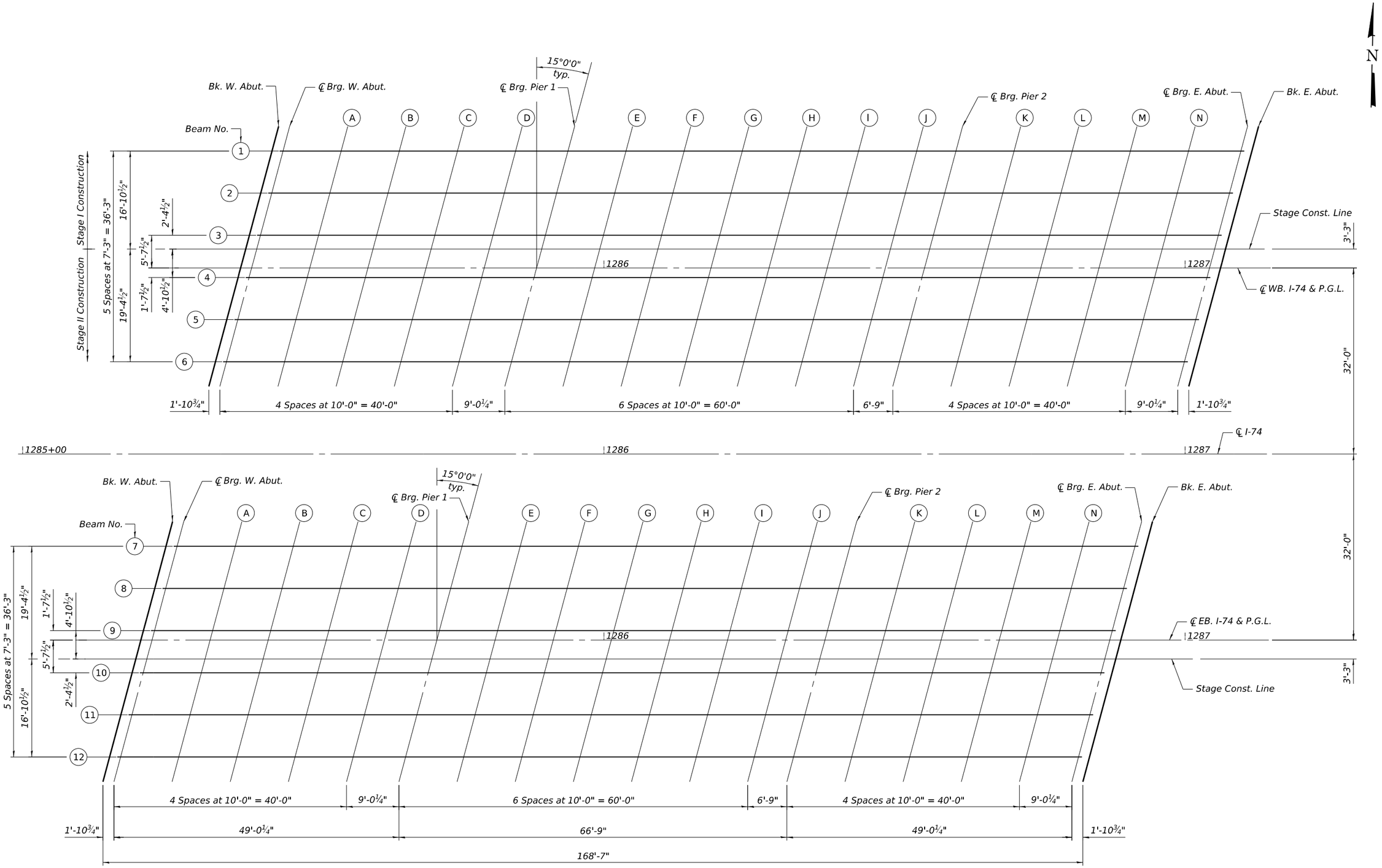

PLAN

MODEL: Default
FILE NAME: P:\Projects\22000\22351\C_DESIGN\01_Discipline\a_Civil\Working\Sheets\Bridge\D5_70D66_TOS-1.dgn

6/23/2025 10:28:50 AM

EPSTEIN

USER NAME = asharghi	DESIGNED - AS	REVISED -	
	CHECKED - TCG	REVISED -	
PLOT SCALE = 16.000 ' / in.	DRAWN - AS	REVISED -	
PLOT DATE = 6/23/2025	CHECKED - TCG	REVISED -	

STATE OF ILLINOIS
DEPARTMENT OF TRANSPORTATION

TOP OF SLAB ELEVATIONS
STRUCTURE NO. 092-0210 (E.B.) & 092-0211 (W.B.)

SHEET S-9 OF S-40 SHEETS

F.A. RTE.	SECTION	COUNTY	TOTAL SHEETS	SHEET NO.
74	(92-9)BR	VERMILION	87	42
		CONTRACT NO. 70D66		
	ILLINOIS	FED. AID PROJECT		

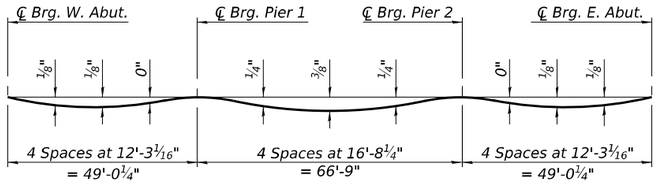

DEAD LOAD DEFLECTION DIAGRAM

(Includes weight of concrete only).

Note:
The above deflections are not to be used in the field if the engineer is working from the grade elevations adjusted for dead load deflections and grinding as shown below and on sheet S-11 .

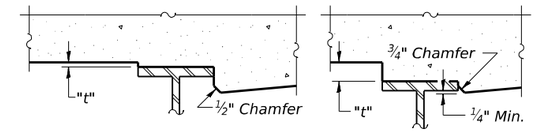

At Minimum Fillet At Maximum Fillet

To determine "t": After all structural steel has been erected, elevations of the top flanges of the beams shall be taken at intervals shown below. These elevations subtracted from the "Theoretical Grade Elevations Adjusted for Dead Load Deflection and Grinding" shown below and on sheet S-11, minus the initial slab thickness prior to grinding, equals the fillet heights "t" above top flange of beams.

The slab is to be ground after curing to achieve smoothness, but the slab is not to be ground to elevations below the "Theoretical Grade Elevations" shown below and on sheet S-11. For grinding the deck, see Special Provisions.

FILLET HEIGHTS

BEAM 7

Location	Station	Offset	Theoretical Grade Elevations	Theoretical Grade Elevations Adjusted For Dead Load Deflection and Grinding
Bk. W. Abut.	1285+24.67	15.88	649.69	649.71
℄ Brg. W. Abut.	1285+26.57	15.88	649.68	649.70
A	1285+36.57	15.88	649.66	649.69
B	1285+46.57	15.88	649.64	649.67
C	1285+56.57	15.88	649.62	649.65
D	1285+66.57	15.88	649.60	649.62
℄ Brg. Pier 1	1285+75.59	15.88	649.58	649.60
E	1285+85.59	15.88	649.56	649.59
F	1285+95.59	15.88	649.54	649.59
G	1286+05.59	15.88	649.52	649.57
H	1286+15.59	15.88	649.50	649.55
I	1286+25.59	15.88	649.48	649.52
J	1286+35.59	15.88	649.46	649.48
℄ Brg. Pier 2	1286+42.34	15.88	649.44	649.46
K	1286+52.34	15.88	649.42	649.44
L	1286+62.34	15.88	649.40	649.43
M	1286+72.34	15.88	649.38	649.41
N	1286+82.34	15.88	649.36	649.39
℄ Brg. E. Abut.	1286+91.36	15.88	649.34	649.36
Bk. E. Abut.	1286+93.26	15.88	649.34	649.36

BEAM 8

Location	Station	Offset	Theoretical Grade Elevations	Theoretical Grade Elevations Adjusted For Dead Load Deflection and Grinding
Bk. W. Abut.	1285+22.73	23.13	649.82	649.84
℄ Brg. W. Abut.	1285+24.63	23.13	649.82	649.84
A	1285+34.63	23.13	649.80	649.83
B	1285+44.63	23.13	649.78	649.81
C	1285+54.63	23.13	649.76	649.79
D	1285+64.63	23.13	649.74	649.76
℄ Brg. Pier 1	1285+73.65	23.13	649.72	649.74
E	1285+83.65	23.13	649.70	649.73
F	1285+93.65	23.13	649.68	649.72
G	1286+03.65	23.13	649.66	649.71
H	1286+13.65	23.13	649.63	649.69
I	1286+23.65	23.13	649.61	649.66
J	1286+33.65	23.13	649.59	649.62
℄ Brg. Pier 2	1286+40.40	23.13	649.58	649.60
K	1286+50.40	23.13	649.56	649.58
L	1286+60.40	23.13	649.54	649.57
M	1286+70.40	23.13	649.52	649.55
N	1286+80.40	23.13	649.50	649.53
℄ Brg. E. Abut.	1286+89.42	23.13	649.48	649.50
Bk. E. Abut.	1286+91.32	23.13	649.47	649.49

BEAM 9

Location	Station	Offset	Theoretical Grade Elevations	Theoretical Grade Elevations Adjusted For Dead Load Deflection and Grinding
Bk. W. Abut.	1285+20.79	30.38	649.94	649.96
℄ Brg. W. Abut.	1285+22.69	30.38	649.93	649.95
A	1285+32.69	30.38	649.91	649.94
B	1285+42.69	30.38	649.89	649.92
C	1285+52.69	30.38	649.87	649.90
D	1285+62.69	30.38	649.85	649.87
℄ Brg. Pier 1	1285+71.71	30.38	649.83	649.85
E	1285+81.71	30.38	649.81	649.84
F	1285+91.71	30.38	649.79	649.84
G	1286+01.71	30.38	649.77	649.82
H	1286+11.71	30.38	649.75	649.80
I	1286+21.71	30.38	649.73	649.77
J	1286+31.71	30.38	649.71	649.73
℄ Brg. Pier 2	1286+38.46	30.38	649.69	649.71
K	1286+48.46	30.38	649.67	649.69
L	1286+58.46	30.38	649.65	649.68
M	1286+68.46	30.38	649.63	649.66
N	1286+78.46	30.38	649.61	649.64
℄ Brg. E. Abut.	1286+87.47	30.38	649.59	649.61
Bk. E. Abut.	1286+89.37	30.38	649.59	649.61

Note:
Offsets are measured from ℄ I-74.

℄ EB. I-74 & P.G.L.

Location	Station	Offset	Theoretical Grade Elevations	Theoretical Grade Elevations Adjusted For Dead Load Deflection and Grinding
Bk. W. Abut.	1285+20.35	32.00	649.96	649.98
℄ Brg. W. Abut.	1285+22.25	32.00	649.96	649.98
A	1285+32.25	32.00	649.94	649.97
B	1285+42.25	32.00	649.92	649.95
C	1285+52.25	32.00	649.90	649.92
D	1285+62.25	32.00	649.87	649.90
℄ Brg. Pier 1	1285+71.27	32.00	649.86	649.88
E	1285+81.27	32.00	649.83	649.87
F	1285+91.27	32.00	649.81	649.86
G	1286+01.27	32.00	649.79	649.85
H	1286+11.27	32.00	649.77	649.83
I	1286+21.27	32.00	649.75	649.79
J	1286+31.27	32.00	649.73	649.76
℄ Brg. Pier 2	1286+38.02	32.00	649.72	649.74
K	1286+48.02	32.00	649.70	649.72
L	1286+58.02	32.00	649.68	649.71
M	1286+68.02	32.00	649.65	649.69
N	1286+78.02	32.00	649.63	649.66
℄ Brg. E. Abut.	1286+87.04	32.00	649.62	649.64
Bk. E. Abut.	1286+88.94	32.00	649.61	649.63

STAGE CONSTRUCTION LINE

Location	Station	Offset	Theoretical Grade Elevations	Theoretical Grade Elevations Adjusted For Dead Load Deflection and Grinding
Bk. W. Abut.	1285+19.48	35.25	649.91	649.94
℄ Brg. W. Abut.	1285+21.38	35.25	649.91	649.93
A	1285+31.38	35.25	649.89	649.92
B	1285+41.38	35.25	649.87	649.90
C	1285+51.38	35.25	649.85	649.88
D	1285+61.38	35.25	649.83	649.85
℄ Brg. Pier 1	1285+70.40	35.25	649.81	649.83
E	1285+80.40	35.25	649.79	649.82
F	1285+90.40	35.25	649.77	649.81
G	1286+00.40	35.25	649.75	649.80
H	1286+10.40	35.25	649.73	649.78
I	1286+20.40	35.25	649.71	649.75
J	1286+30.40	35.25	649.68	649.71
℄ Brg. Pier 2	1286+37.15	35.25	649.67	649.69
K	1286+47.15	35.25	649.65	649.67
L	1286+57.15	35.25	649.63	649.66
M	1286+67.15	35.25	649.61	649.64
N	1286+77.15	35.25	649.59	649.62
℄ Brg. E. Abut.	1286+86.17	35.25	649.57	649.59
Bk. E. Abut.	1286+88.07	35.25	649.56	649.59

BEAM 10

Location	Station	Offset	Theoretical Grade Elevations	Theoretical Grade Elevations Adjusted For Dead Load Deflection and Grinding
Bk. W. Abut.	1285+18.85	37.63	649.88	649.90
℄ Brg. W. Abut.	1285+20.75	37.63	649.88	649.90
A	1285+30.75	37.63	649.86	649.89
B	1285+40.75	37.63	649.83	649.87
C	1285+50.75	37.63	649.81	649.84
D	1285+60.75	37.63	649.79	649.82
℄ Brg. Pier 1	1285+69.76	37.63	649.77	649.80
E	1285+79.76	37.63	649.75	649.79
F	1285+89.76	37.63	649.73	649.78
G	1285+99.76	37.63	649.71	649.77
H	1286+09.76	37.63	649.69	649.75
I	1286+19.76	37.63	649.67	649.71
J	1286+29.76	37.63	649.65	649.68
℄ Brg. Pier 2	1286+36.51	37.63	649.64	649.66
K	1286+46.51	37.63	649.62	649.64
L	1286+56.51	37.63	649.59	649.62
M	1286+66.51	37.63	649.57	649.61
N	1286+76.51	37.63	649.55	649.58
℄ Brg. E. Abut.	1286+85.53	37.63	649.53	649.56
Bk. E. Abut.	1286+87.43	37.63	649.53	649.55

BEAM 11

Location	Station	Offset	Theoretical Grade Elevations	Theoretical Grade Elevations Adjusted For Dead Load Deflection and Grinding
Bk. W. Abut.	1285+16.90	44.88	649.77	649.79
℄ Brg. W. Abut.	1285+18.80	44.88	649.77	649.79
A	1285+28.80	44.88	649.75	649.78
B	1285+38.80	44.88	649.72	649.76
C	1285+48.80	44.88	649.70	649.73
D	1285+58.80	44.88	649.68	649.71
℄ Brg. Pier 1	1285+67.82	44.88	649.66	649.69
E	1285+77.82	44.88	649.64	649.68
F	1285+87.82	44.88	649.62	649.67
G	1285+97.82	44.88	649.60	649.66
H	1286+07.82	44.88	649.58	649.64
I	1286+17.82	44.88	649.56	649.60
J	1286+27.82	44.88	649.54	649.57
℄ Brg. Pier 2	1286+34.57	44.88	649.53	649.55
K	1286+44.57	44.88	649.51	649.53
L	1286+54.57	44.88	649.48	649.51
M	1286+64.57	44.88	649.46	649.50
N	1286+74.57	44.88	649.44	649.47
℄ Brg. E. Abut.	1286+83.59	44.88	649.42	649.45
Bk. E. Abut.	1286+85.49	44.88	649.42	649.44

BEAM 12

Location	Station	Offset	Theoretical Grade Elevations	Theoretical Grade Elevations Adjusted For Dead Load Deflection and Grinding
Bk. W. Abut.	1285+14.96	52.13	649.62	649.64
℄ Brg. W. Abut.	1285+16.86	52.13	649.62	649.64
A	1285+26.86	52.13	649.60	649.63
B	1285+36.86	52.13	649.58	649.61
C	1285+46.86	52.13	649.56	649.59
D	1285+56.86	52.13	649.54	649.56
℄ Brg. Pier 1	1285+65.88	52.13	649.52	649.54
E	1285+75.88	52.13	649.50	649.53
F	1285+85.88	52.13	649.48	649.52
G	1285+95.88	52.13	649.46	649.51
H	1286+05.88	52.13	649.43	649.49
I	1286+15.88	52.13	649.41	649.46
J	1286+25.88	52.13	649.39	649.42
℄ Brg. Pier 2	1286+32.63	52.13	649.38	649.40
K	1286+42.63	52.13	649.36	649.38
L	1286+52.63	52.13	649.34	649.37
M	1286+62.63	52.13	649.32	649.35
N	1286+72.63	52.13	649.30	649.33
℄ Brg. E. Abut.	1286+81.65	52.13	649.28	649.30
Bk. E. Abut.	1286+83.54	52.13	649.27	649.29

Note:
Offsets are measured from ℄ I-74.

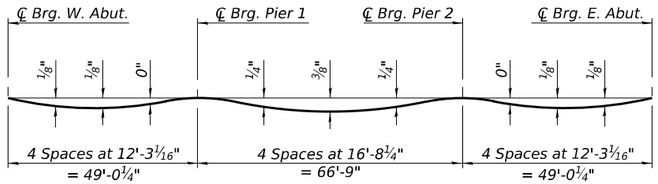

DEAD LOAD DEFLECTION DIAGRAM

(Includes weight of concrete only).

Note:
The above deflections are not to be used in the field if the engineer is working from the grade elevations adjusted for dead load deflections and grinding as shown below and on sheet S-13 .

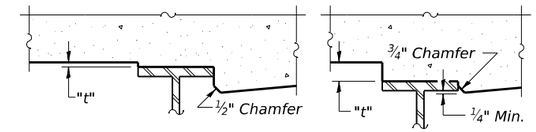

At Minimum Fillet At Maximum Fillet

To determine "t": After all structural steel has been erected, elevations of the top flanges of the beams shall be taken at intervals shown below. These elevations subtracted from the "Theoretical Grade Elevations Adjusted for Dead Load Deflection and Grinding" shown below and on sheet S-13, minus the initial slab thickness prior to grinding, equals the fillet heights "t" above top flange of beams.
The slab is to be ground after curing to achieve smoothness, but the slab is not to be ground to elevations below the "Theoretical Grade Elevations" shown below and on sheet S-13. For grinding the deck, see Special Provisions.

FILLET HEIGHTS

BEAM 1

Location	Station	Offset	Theoretical Grade Elevations	Theoretical Grade Elevations Adjusted For Dead Load Deflection and Grinding
Bk. W. Abut.	1285+42.89	-52.13	649.67	649.69
℄ Brg. W. Abut.	1285+44.79	-52.13	649.66	649.68
A	1285+54.79	-52.13	649.63	649.66
B	1285+64.79	-52.13	649.59	649.63
C	1285+74.79	-52.13	649.56	649.59
D	1285+84.79	-52.13	649.53	649.55
℄ Brg. Pier 1	1285+93.81	-52.13	649.50	649.52
E	1286+03.81	-52.13	649.46	649.50
F	1286+13.81	-52.13	649.43	649.48
G	1286+23.81	-52.13	649.40	649.45
H	1286+33.81	-52.13	649.36	649.42
I	1286+43.81	-52.13	649.33	649.37
J	1286+53.81	-52.13	649.30	649.32
℄ Brg. Pier 2	1286+60.56	-52.13	649.27	649.29
K	1286+70.56	-52.13	649.24	649.26
L	1286+80.56	-52.13	649.21	649.24
M	1286+90.56	-52.13	649.17	649.21
N	1287+00.56	-52.13	649.14	649.17
℄ Brg. E. Abut.	1287+09.58	-52.13	649.11	649.13
Bk. E. Abut.	1287+11.48	-52.13	649.10	649.12

BEAM 2

Location	Station	Offset	Theoretical Grade Elevations	Theoretical Grade Elevations Adjusted For Dead Load Deflection and Grinding
Bk. W. Abut.	1285+40.95	-44.88	649.83	649.85
℄ Brg. W. Abut.	1285+42.85	-44.88	649.82	649.84
A	1285+52.85	-44.88	649.79	649.82
B	1285+62.85	-44.88	649.75	649.79
C	1285+72.85	-44.88	649.72	649.75
D	1285+82.85	-44.88	649.68	649.71
℄ Brg. Pier 1	1285+91.87	-44.88	649.65	649.68
E	1286+01.87	-44.88	649.62	649.65
F	1286+11.87	-44.88	649.59	649.63
G	1286+21.87	-44.88	649.55	649.61
H	1286+31.87	-44.88	649.52	649.58
I	1286+41.87	-44.88	649.49	649.53
J	1286+51.87	-44.88	649.45	649.48
℄ Brg. Pier 2	1286+58.62	-44.88	649.43	649.45
K	1286+68.62	-44.88	649.40	649.42
L	1286+78.62	-44.88	649.36	649.39
M	1286+88.62	-44.88	649.33	649.36
N	1286+98.62	-44.88	649.30	649.33
℄ Brg. E. Abut.	1287+07.64	-44.88	649.27	649.29
Bk. E. Abut.	1287+09.54	-44.88	649.26	649.28

BEAM 3

Location	Station	Offset	Theoretical Grade Elevations	Theoretical Grade Elevations Adjusted For Dead Load Deflection and Grinding
Bk. W. Abut.	1285+39.01	-37.63	649.95	649.97
℄ Brg. W. Abut.	1285+40.91	-37.63	649.94	649.96
A	1285+50.91	-37.63	649.91	649.94
B	1285+60.91	-37.63	649.87	649.91
C	1285+70.91	-37.63	649.84	649.87
D	1285+80.91	-37.63	649.81	649.83
℄ Brg. Pier 1	1285+89.93	-37.63	649.77	649.80
E	1285+99.93	-37.63	649.74	649.77
F	1286+09.93	-37.63	649.71	649.76
G	1286+19.93	-37.63	649.67	649.73
H	1286+29.93	-37.63	649.64	649.70
I	1286+39.93	-37.63	649.61	649.65
J	1286+49.93	-37.63	649.57	649.60
℄ Brg. Pier 2	1286+56.68	-37.63	649.55	649.57
K	1286+66.68	-37.63	649.52	649.54
L	1286+76.68	-37.63	649.48	649.51
M	1286+86.68	-37.63	649.45	649.48
N	1286+96.68	-37.63	649.42	649.45
℄ Brg. E. Abut.	1287+05.70	-37.63	649.39	649.41
Bk. E. Abut.	1287+07.59	-37.63	649.38	649.40

Note:
Offsets are measured from ℄ I-74.

STAGE CONSTRUCTION LINE

Location	Station	Offset	Theoretical Grade Elevations	Theoretical Grade Elevations Adjusted For Dead Load Deflection and Grinding
Bk. W. Abut.	1285+38.37	-35.25	649.98	650.00
℄ Brg. W. Abut.	1285+40.27	-35.25	649.98	650.00
A	1285+50.27	-35.25	649.94	649.97
B	1285+60.27	-35.25	649.91	649.94
C	1285+70.27	-35.25	649.88	649.91
D	1285+80.27	-35.25	649.84	649.87
℄ Brg. Pier 1	1285+89.29	-35.25	649.81	649.83
E	1285+99.29	-35.25	649.78	649.81
F	1286+09.29	-35.25	649.75	649.79
G	1286+19.29	-35.25	649.71	649.77
H	1286+29.29	-35.25	649.68	649.73
I	1286+39.29	-35.25	649.65	649.69
J	1286+49.29	-35.25	649.61	649.64
℄ Brg. Pier 2	1286+56.04	-35.25	649.59	649.61
K	1286+66.04	-35.25	649.56	649.58
L	1286+76.04	-35.25	649.52	649.55
M	1286+86.04	-35.25	649.49	649.52
N	1286+96.04	-35.25	649.45	649.48
℄ Brg. E. Abut.	1287+05.06	-35.25	649.42	649.45
Bk. E. Abut.	1287+06.96	-35.25	649.42	649.44

℄ WB. I-74 & P.G.L.

Location	Station	Offset	Theoretical Grade Elevations	Theoretical Grade Elevations Adjusted For Dead Load Deflection and Grinding
Bk. W. Abut.	1285+37.50	-32.00	650.04	650.06
℄ Brg. W. Abut.	1285+39.40	-32.00	650.03	650.05
A	1285+49.40	-32.00	650.00	650.03
B	1285+59.40	-32.00	649.96	650.00
C	1285+69.40	-32.00	649.93	649.96
D	1285+79.40	-32.00	649.89	649.92
℄ Brg. Pier 1	1285+88.42	-32.00	649.86	649.89
E	1285+98.42	-32.00	649.83	649.86
F	1286+08.42	-32.00	649.80	649.84
G	1286+18.42	-32.00	649.76	649.82
H	1286+28.42	-32.00	649.73	649.78
I	1286+38.42	-32.00	649.70	649.74
J	1286+48.42	-32.00	649.66	649.69
℄ Brg. Pier 2	1286+55.17	-32.00	649.64	649.66
K	1286+65.17	-32.00	649.61	649.63
L	1286+75.17	-32.00	649.57	649.60
M	1286+85.17	-32.00	649.54	649.57
N	1286+95.17	-32.00	649.51	649.54
℄ Brg. E. Abut.	1287+04.19	-32.00	649.48	649.50
Bk. E. Abut.	1287+06.09	-32.00	649.47	649.49

BEAM 4

Location	Station	Offset	Theoretical Grade Elevations	Theoretical Grade Elevations Adjusted For Dead Load Deflection and Grinding
Bk. W. Abut.	1285+37.07	-30.38	650.01	650.03
℄ Brg. W. Abut.	1285+38.97	-30.38	650.01	650.03
A	1285+48.97	-30.38	649.97	650.00
B	1285+58.97	-30.38	649.94	649.97
C	1285+68.97	-30.38	649.91	649.93
D	1285+78.97	-30.38	649.87	649.89
℄ Brg. Pier 1	1285+87.98	-30.38	649.84	649.86
E	1285+97.98	-30.38	649.81	649.84
F	1286+07.98	-30.38	649.77	649.82
G	1286+17.98	-30.38	649.74	649.80
H	1286+27.98	-30.38	649.71	649.76
I	1286+37.98	-30.38	649.67	649.72
J	1286+47.98	-30.38	649.64	649.67
℄ Brg. Pier 2	1286+54.73	-30.38	649.62	649.64
K	1286+64.73	-30.38	649.58	649.61
L	1286+74.73	-30.38	649.55	649.58
M	1286+84.73	-30.38	649.52	649.55
N	1286+94.73	-30.38	649.48	649.51
℄ Brg. E. Abut.	1287+03.75	-30.38	649.45	649.47
Bk. E. Abut.	1287+05.65	-30.38	649.45	649.47

BEAM 5

Location	Station	Offset	Theoretical Grade Elevations	Theoretical Grade Elevations Adjusted For Dead Load Deflection and Grinding
Bk. W. Abut.	1285+35.12	-23.13	649.91	649.93
℄ Brg. W. Abut.	1285+37.02	-23.13	649.90	649.92
A	1285+47.02	-23.13	649.87	649.90
B	1285+57.02	-23.13	649.84	649.87
C	1285+67.02	-23.13	649.80	649.83
D	1285+77.02	-23.13	649.77	649.79
℄ Brg. Pier 1	1285+86.04	-23.13	649.74	649.76
E	1285+96.04	-23.13	649.71	649.74
F	1286+06.04	-23.13	649.67	649.72
G	1286+16.04	-23.13	649.64	649.69
H	1286+26.04	-23.13	649.61	649.66
I	1286+36.04	-23.13	649.57	649.61
J	1286+46.04	-23.13	649.54	649.57
℄ Brg. Pier 2	1286+52.79	-23.13	649.52	649.54
K	1286+62.79	-23.13	649.48	649.50
L	1286+72.79	-23.13	649.45	649.48
M	1286+82.79	-23.13	649.41	649.45
N	1286+92.79	-23.13	649.38	649.41
℄ Brg. E. Abut.	1287+01.81	-23.13	649.35	649.37
Bk. E. Abut.	1287+03.71	-23.13	649.34	649.37

BEAM 6

Location	Station	Offset	Theoretical Grade Elevations	Theoretical Grade Elevations Adjusted For Dead Load Deflection and Grinding
Bk. W. Abut.	1285+33.18	-15.88	649.78	649.80
℄ Brg. W. Abut.	1285+35.08	-15.88	649.78	649.80
A	1285+45.08	-15.88	649.74	649.77
B	1285+55.08	-15.88	649.71	649.74
C	1285+65.08	-15.88	649.68	649.71
D	1285+75.08	-15.88	649.64	649.67
℄ Brg. Pier 1	1285+84.10	-15.88	649.61	649.63
E	1285+94.10	-15.88	649.58	649.61
F	1286+04.10	-15.88	649.55	649.59
G	1286+14.10	-15.88	649.51	649.57
H	1286+24.10	-15.88	649.48	649.53
I	1286+34.10	-15.88	649.45	649.49
J	1286+44.10	-15.88	649.41	649.44
℄ Brg. Pier 2	1286+50.85	-15.88	649.39	649.41
K	1286+60.85	-15.88	649.36	649.38
L	1286+70.85	-15.88	649.32	649.35
M	1286+80.85	-15.88	649.29	649.32
N	1286+90.85	-15.88	649.25	649.28
℄ Brg. E. Abut.	1286+99.87	-15.88	649.22	649.25
Bk. E. Abut.	1287+01.77	-15.88	649.22	649.24

Note:
Offsets are measured from ℄ I-74.

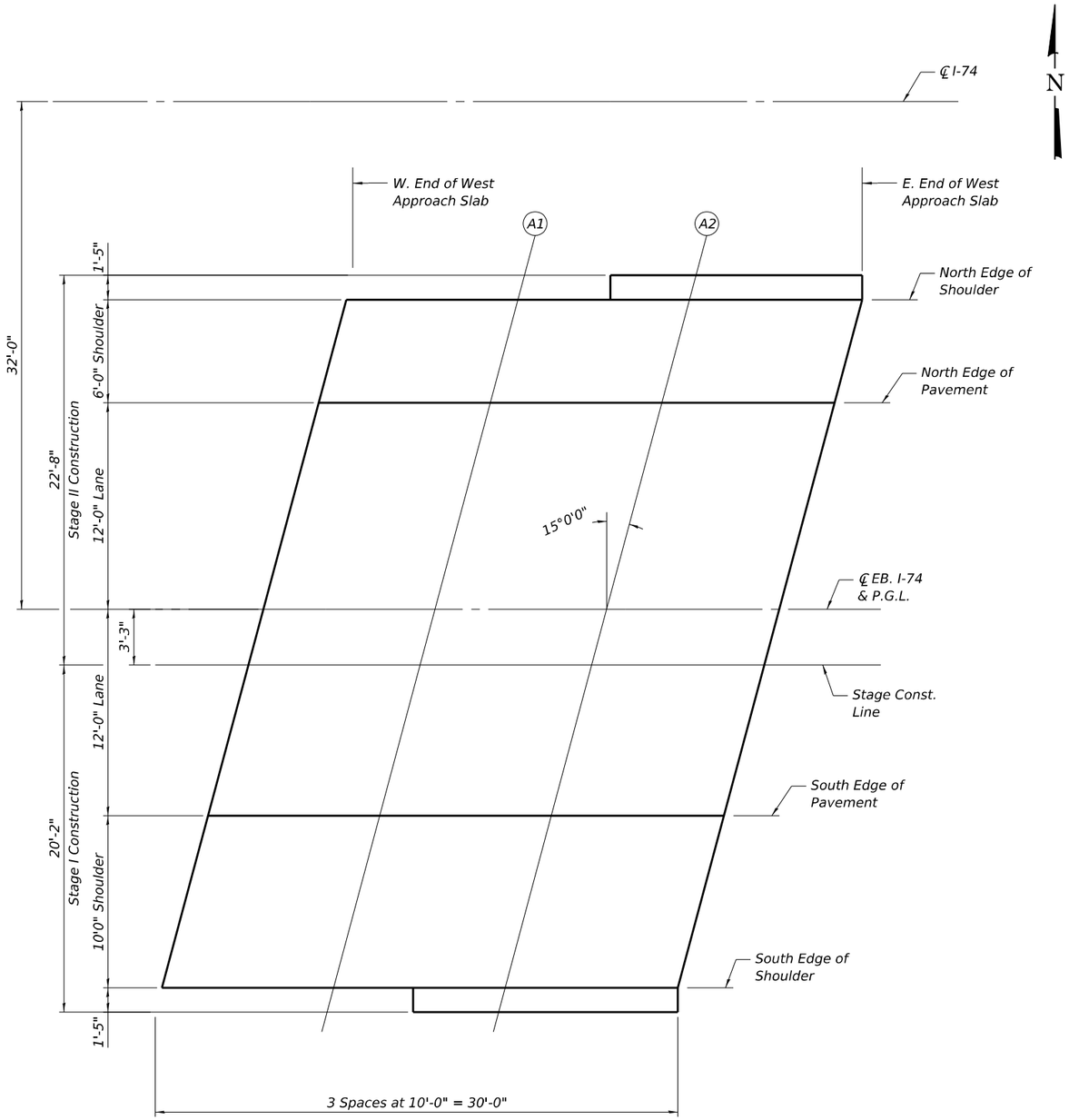

PLAN

West Approach (E.B.)

NORTH EDGE OF SHOULDER

Location	Station	Offset	Theoretical Grade Elevations Adjusted For Grinding
W. End	1284+96.21	14.00	649.72
A1	1285+06.21	14.00	649.71
A2	1285+16.21	14.00	649.69
E. End	1285+26.21	14.00	649.66

STAGE CONSTRUCTION LINE

Location	Station	Offset	Theoretical Grade Elevations Adjusted For Grinding
W. End	1284+90.52	35.25	650.00
A1	1285+00.52	35.25	649.97
A2	1285+10.52	35.25	649.95
E. End	1285+20.52	35.25	649.93

NORTH EDGE OF PAVEMENT

Location	Station	Offset	Theoretical Grade Elevations Adjusted For Grinding
W. End	1284+94.61	20.00	649.86
A1	1285+04.61	20.00	649.83
A2	1285+14.61	20.00	649.81
E. End	1285+24.61	20.00	649.79

SOUTH EDGE OF PAVEMENT

Location	Station	Offset	Theoretical Grade Elevations Adjusted For Grinding
W. End	1284+88.17	44.00	649.87
A1	1284+98.17	44.00	649.85
A2	1285+08.17	44.00	649.83
E. End	1285+18.17	44.00	649.81

℄ EB. I-74 & P.G.L.

Location	Station	Offset	Theoretical Grade Elevations Adjusted For Grinding
W. End	1284+91.39	32.00	650.04
A1	1285+01.39	32.00	650.02
A2	1285+11.39	32.00	650.00
E. End	1285+21.39	32.00	649.98

SOUTH EDGE OF SHOULDER

Location	Station	Offset	Theoretical Grade Elevations Adjusted For Grinding
W. End	1284+85.49	54.00	649.62
A1	1284+95.49	54.00	649.62
A2	1285+05.49	54.00	649.62
E. End	1285+15.49	54.00	649.60

Note:
Offsets are measured from ℄ I-74.

MODEL: Default
FILE NAME: P:\Projects\22000\22351C_DESIGN\01_Discipline\a_Civil\Working\Sheets\Bridge\D5_70D66_TAS-1.dgn

6/23/2025 10:28:54 AM

EPSTEIN

USER NAME = asharghi	DESIGNED - AS	REVISED -	
	CHECKED - TCG	REVISED -	
PLOT SCALE = 0.167 ' / in.	DRAWN - AS	REVISED -	
PLOT DATE = 6/23/2025	CHECKED - TCG	REVISED -	

STATE OF ILLINOIS
DEPARTMENT OF TRANSPORTATION

TOP OF APPROACH SLAB ELEVATIONS
STRUCTURE NO. 092-0210

SHEET S-14 OF S-40 SHEETS

F.A. RTE.	SECTION	COUNTY	TOTAL SHEETS	SHEET NO.
74	(92-9)BR	VERMILION	87	47

CONTRACT NO. 70D66

ILLINOIS FED. AID PROJECT

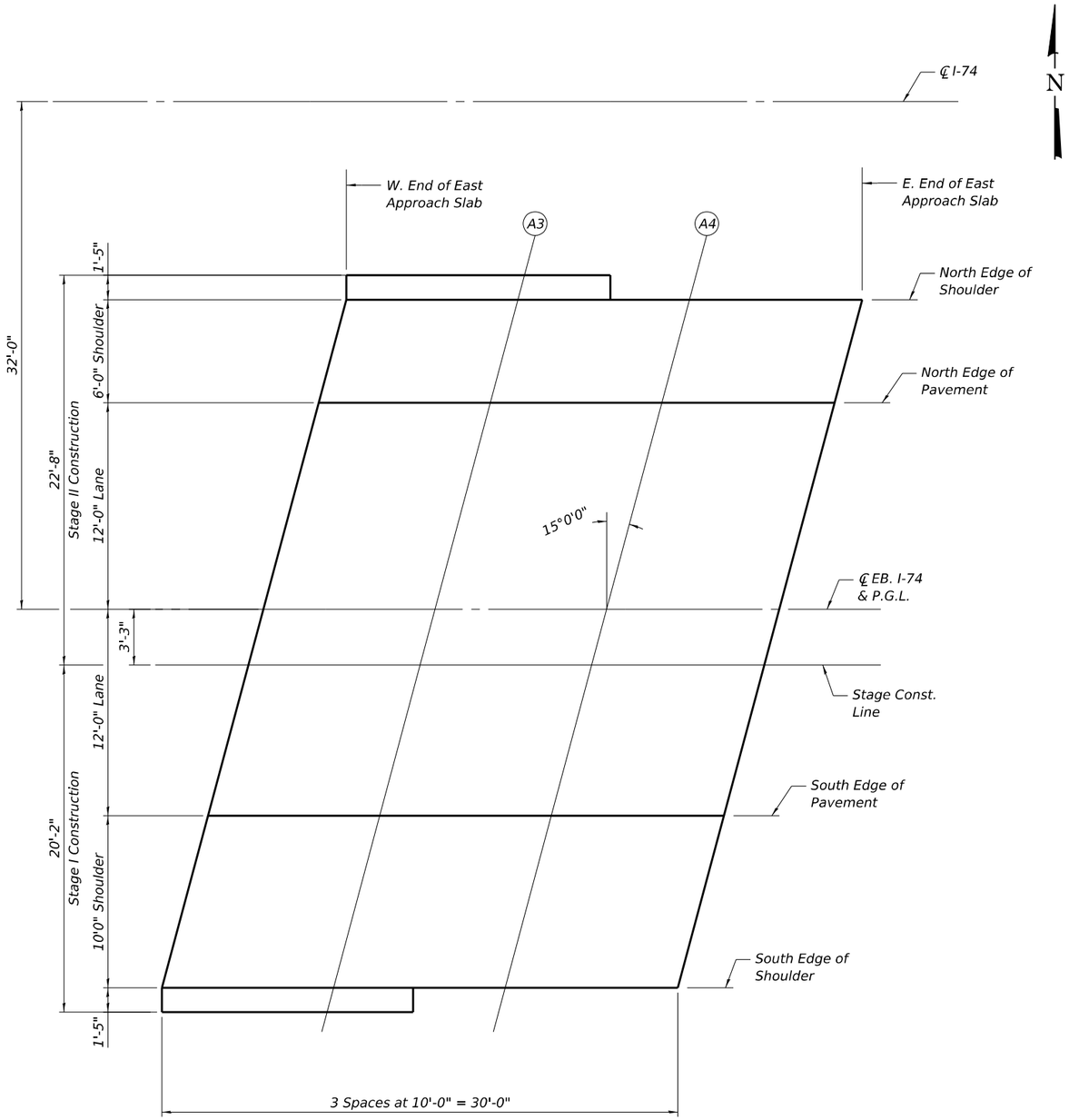

PLAN

East Approach (E.B.)

NORTH EDGE OF SHOULDER

Location	Station	Offset	Theoretical Grade Elevations Adjusted For Grinding
W. End	1286+92.73	14.00	649.32
A3	1287+02.73	14.00	649.30
A4	1287+12.73	14.00	649.28
E. End	1287+22.73	14.00	649.23

STAGE CONSTRUCTION LINE

Location	Station	Offset	Theoretical Grade Elevations Adjusted For Grinding
W. End	1286+87.03	35.25	649.59
A3	1286+97.03	35.25	649.57
A4	1287+07.03	35.25	649.55
E. End	1287+17.03	35.25	649.53

NORTH EDGE OF PAVEMENT

Location	Station	Offset	Theoretical Grade Elevations Adjusted For Grinding
W. End	1286+91.12	20.00	649.45
A3	1287+01.12	20.00	649.43
A4	1287+11.12	20.00	649.41
E. End	1287+21.12	20.00	649.38

SOUTH EDGE OF PAVEMENT

Location	Station	Offset	Theoretical Grade Elevations Adjusted For Grinding
W. End	1286+84.69	44.00	649.46
A3	1286+94.69	44.00	649.44
A4	1287+04.69	44.00	649.42
E. End	1287+14.69	44.00	649.40

℄ EB. I-74 & P.G.L.

Location	Station	Offset	Theoretical Grade Elevations Adjusted For Grinding
W. End	1286+87.90	32.00	649.63
A3	1286+97.90	32.00	649.61
A4	1287+07.90	32.00	649.59
E. End	1287+17.90	32.00	649.57

SOUTH EDGE OF SHOULDER

Location	Station	Offset	Theoretical Grade Elevations Adjusted For Grinding
W. End	1286+82.01	54.00	649.26
A3	1286+92.01	54.00	649.24
A4	1287+02.01	54.00	649.22
E. End	1287+12.01	54.00	649.20

Note:
Offsets are measured from ℄ I-74.

MODEL: Default
FILE NAME: P:\Projects\22000\223511C_DESIGN\01_Discipline\a_Civil\Working\Sheets\Bridge\D5_70D66_TAS-2.dgn

EPSTEIN

USER NAME = asharghi	DESIGNED - AS	REVISED -	
	CHECKED - TCG	REVISED -	
PLOT SCALE = 0.167 ' / in.	DRAWN - AS	REVISED -	
PLOT DATE = 6/23/2025	CHECKED - TCG	REVISED -	

STATE OF ILLINOIS
DEPARTMENT OF TRANSPORTATION

TOP OF APPROACH SLAB ELEVATIONS
STRUCTURE NO. 092-0210

SHEET S-15 OF S-40 SHEETS

F.A. RTE.	SECTION	COUNTY	TOTAL SHEETS	SHEET NO.
74	(92-9)BR	VERMILION	87	48

CONTRACT NO. 70D66

ILLINOIS | FED. AID PROJECT

6/23/2025 10:28:55 AM

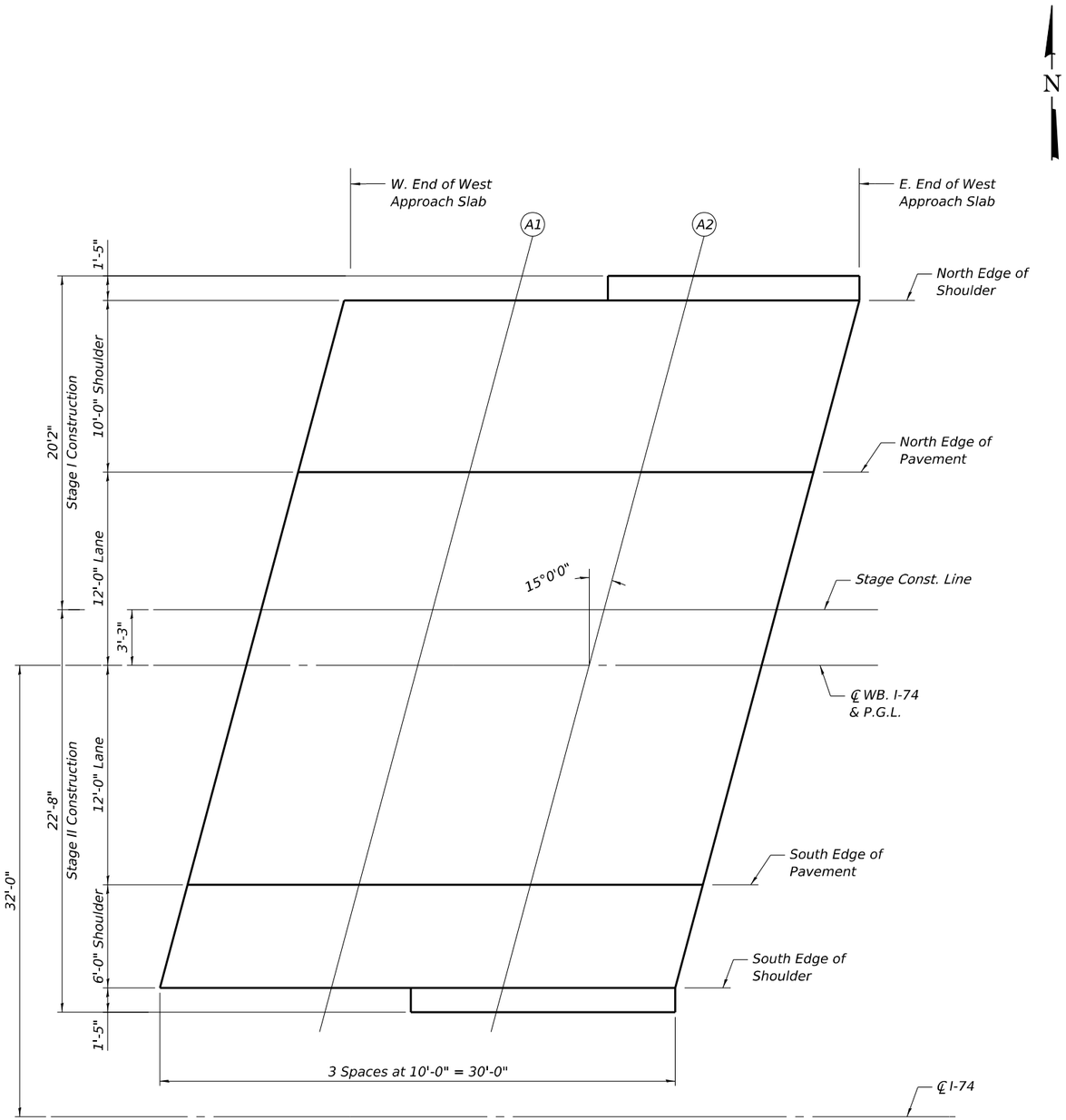

PLAN

West Approach (W.B.)

NORTH EDGE OF SHOULDER

Location	Station	Offset	Theoretical Grade Elevations Adjusted For Grinding
W. End	1285+14.43	-54.00	649.75
A1	1285+24.43	-54.00	649.71
A2	1285+34.43	-54.00	649.68
E. End	1285+44.43	-54.00	649.64

℄ WB. I-74 & P.G.L.

Location	Station	Offset	Theoretical Grade Elevations Adjusted For Grinding
W. End	1285+08.54	-32.00	650.15
A1	1285+18.54	-32.00	650.12
A2	1285+28.54	-32.00	650.09
E. End	1285+38.54	-32.00	650.05

NORTH EDGE OF PAVEMENT

Location	Station	Offset	Theoretical Grade Elevations Adjusted For Grinding
W. End	1285+11.75	-44.00	649.96
A1	1285+21.75	-44.00	649.93
A2	1285+31.75	-44.00	649.90
E. End	1285+41.75	-44.00	649.86

SOUTH EDGE OF PAVEMENT

Location	Station	Offset	Theoretical Grade Elevations Adjusted For Grinding
W. End	1285+05.32	-20.00	649.98
A1	1285+15.32	-20.00	649.95
A2	1285+25.32	-20.00	649.92
E. End	1285+35.32	-20.00	649.88

STAGE CONSTRUCTION LINE

Location	Station	Offset	Theoretical Grade Elevations Adjusted For Grinding
W. End	1285+09.41	-35.25	650.10
A1	1285+19.41	-35.25	650.07
A2	1285+29.41	-35.25	650.03
E. End	1285+39.41	-35.25	650.00

SOUTH EDGE OF SHOULDER

Location	Station	Offset	Theoretical Grade Elevations Adjusted For Grinding
W. End	1285+03.72	-14.00	649.85
A1	1285+13.72	-14.00	649.83
A2	1285+23.72	-14.00	649.80
E. End	1285+33.72	-14.00	649.76

Note:
Offsets are measured from ℄ I-74.

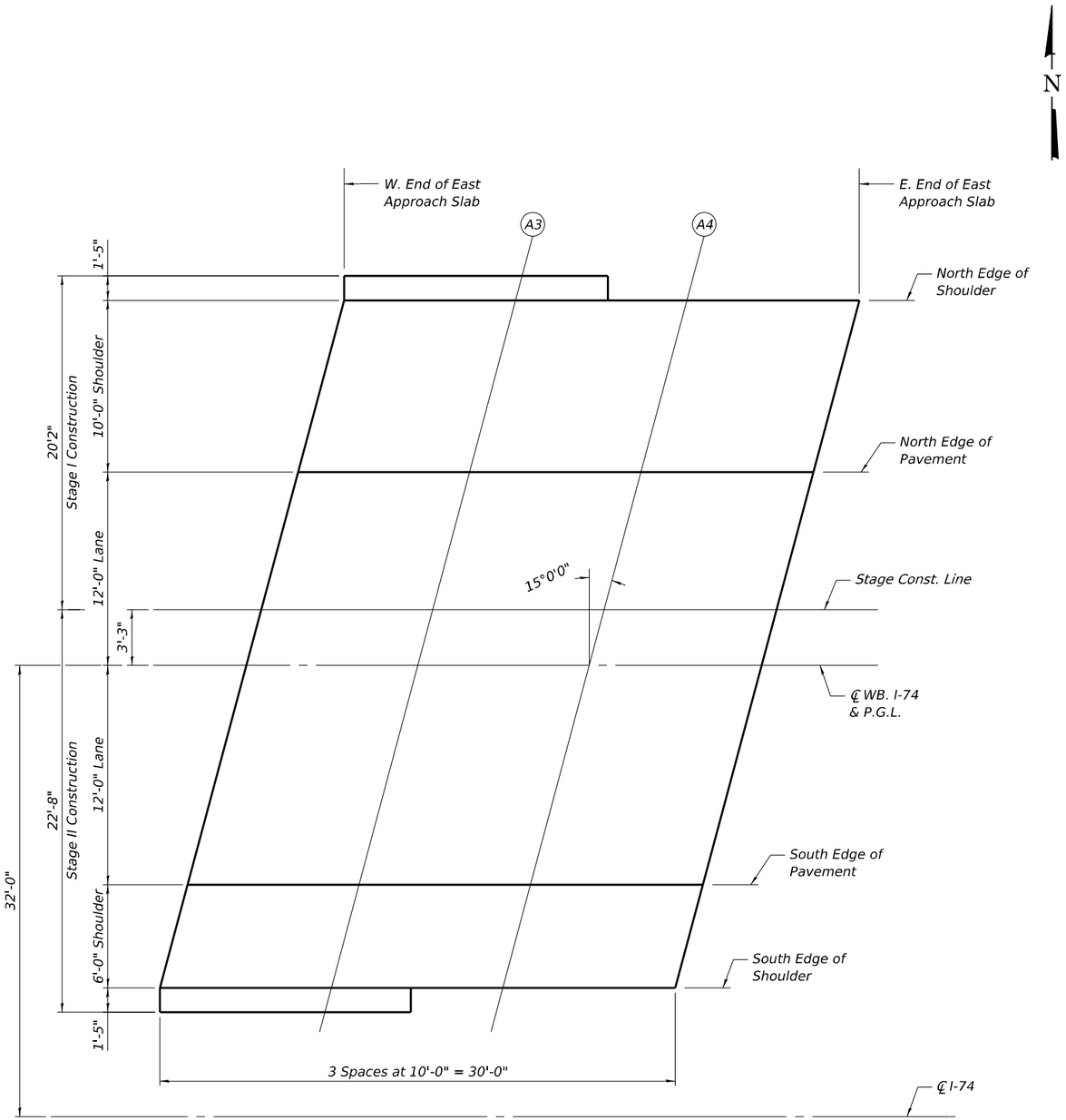

PLAN
East Approach (W.B.)

NORTH EDGE OF SHOULDER

Location	Station	Offset	Theoretical Grade Elevations Adjusted For Grinding
W. End	1287+10.95	-54.00	649.09
A3	1287+20.95	-54.00	649.02
A4	1287+30.95	-54.00	648.93
E. End	1287+40.95	-54.00	648.86

℄ WB. I-74 & P.G.L.

Location	Station	Offset	Theoretical Grade Elevations Adjusted For Grinding
W. End	1287+05.05	-32.00	649.49
A3	1287+15.05	-32.00	649.46
A4	1287+25.05	-32.00	649.43
E. End	1287+35.05	-32.00	649.39

NORTH EDGE OF PAVEMENT

Location	Station	Offset	Theoretical Grade Elevations Adjusted For Grinding
W. End	1287+08.27	-44.00	649.30
A3	1287+18.27	-44.00	649.27
A4	1287+28.27	-44.00	649.24
E. End	1287+38.27	-44.00	649.21

SOUTH EDGE OF PAVEMENT

Location	Station	Offset	Theoretical Grade Elevations Adjusted For Grinding
W. End	1287+01.84	-20.00	649.32
A3	1287+11.84	-20.00	649.29
A4	1287+21.84	-20.00	649.26
E. End	1287+31.84	-20.00	649.22

STAGE CONSTRUCTION LINE

Location	Station	Offset	Theoretical Grade Elevations Adjusted For Grinding
W. End	1287+05.92	-35.25	649.44
A3	1287+15.92	-35.25	649.41
A4	1287+25.92	-35.25	649.38
E. End	1287+35.92	-35.25	649.34

SOUTH EDGE OF SHOULDER

Location	Station	Offset	Theoretical Grade Elevations Adjusted For Grinding
W. End	1287+00.23	-14.00	649.21
A3	1287+10.23	-14.00	649.17
A4	1287+20.23	-14.00	649.12
E. End	1287+30.23	-14.00	649.06

Note:
Offsets are measured from ℄ I-74.

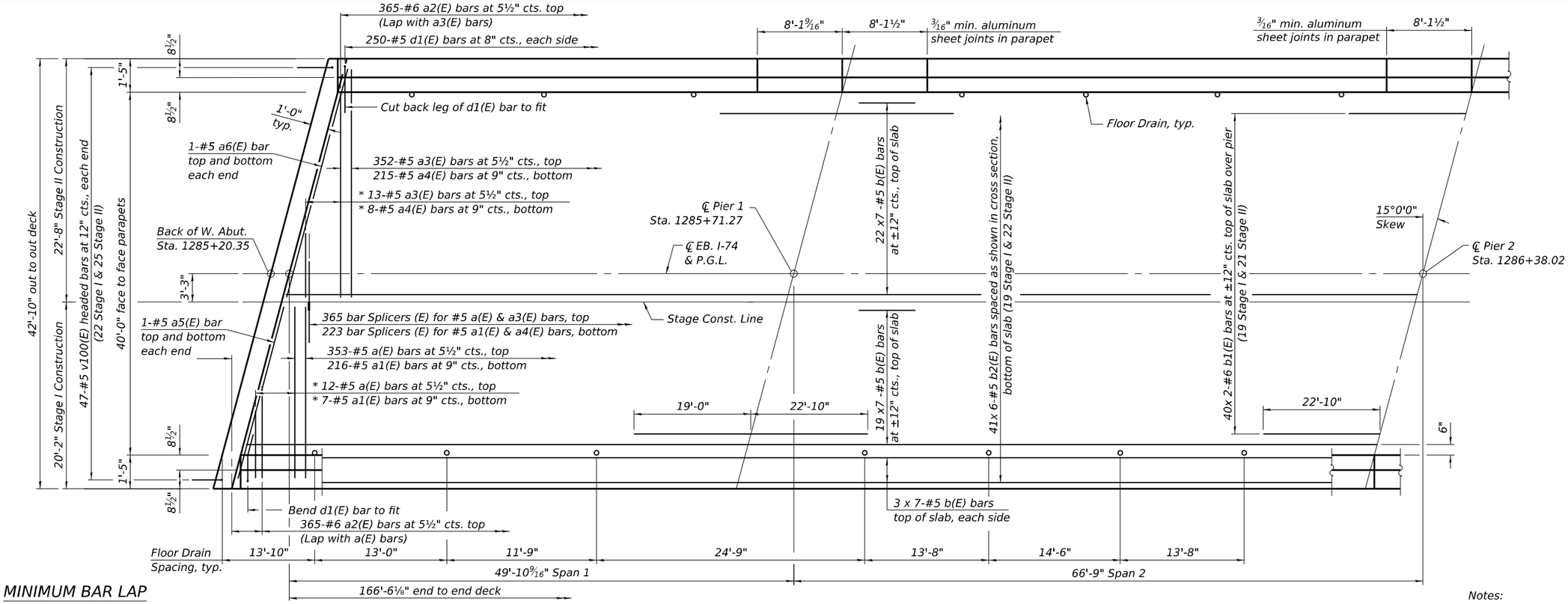

MINIMUM BAR LAP

#5 bar = 3'-10"
#6 bar = 5'-3"

* Order a(E), a1(E), a3(E) and a4(E) bars full length.
Cut to fit skew and use remainder of bars in opposite end.

PARTIAL PLAN

Notes:
See sheet S-20 for superstructure details and Bill of Material.
Bars indicated thus 20 x 3-#5 etc. indicates 20 lines of bars with 3 lengths per line.

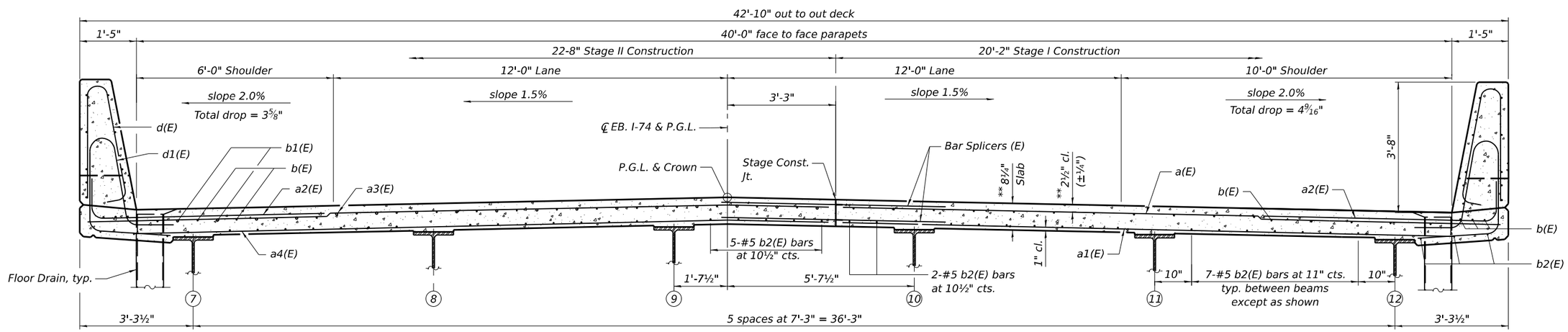

CROSS SECTION

(Looking East)
** Prior to Grinding

EPSTEIN	USER NAME = asharghi	DESIGNED - AS	REVISED -	STATE OF ILLINOIS DEPARTMENT OF TRANSPORTATION	SUPERSTRUCTURE PLAN STRUCTURE NO. 092-0210	F.A. RTE.	SECTION	COUNTY	TOTAL SHEETS / SHEET NO.
		CHECKED - TCG	REVISED -			74	(92-9)BR	VERMILION	87 / 51
	PLOT SCALE = 0.167 ' / in.	DRAWN - AS	REVISED -					CONTRACT NO. 70D66	
	PLOT DATE = 6/23/2025	CHECKED - TCG	REVISED -		SHEET S-18 OF S-40 SHEETS		ILLINOIS	FED. AID PROJECT	

MODEL: Default
FILE NAME: P:\Projects\22000\22311C_DESIGN\01_Discipline\a_Civil\Working\Sheets\Bridge\D5_70D66_Super-1.dgn
6/23/2025 10:28:56 AM

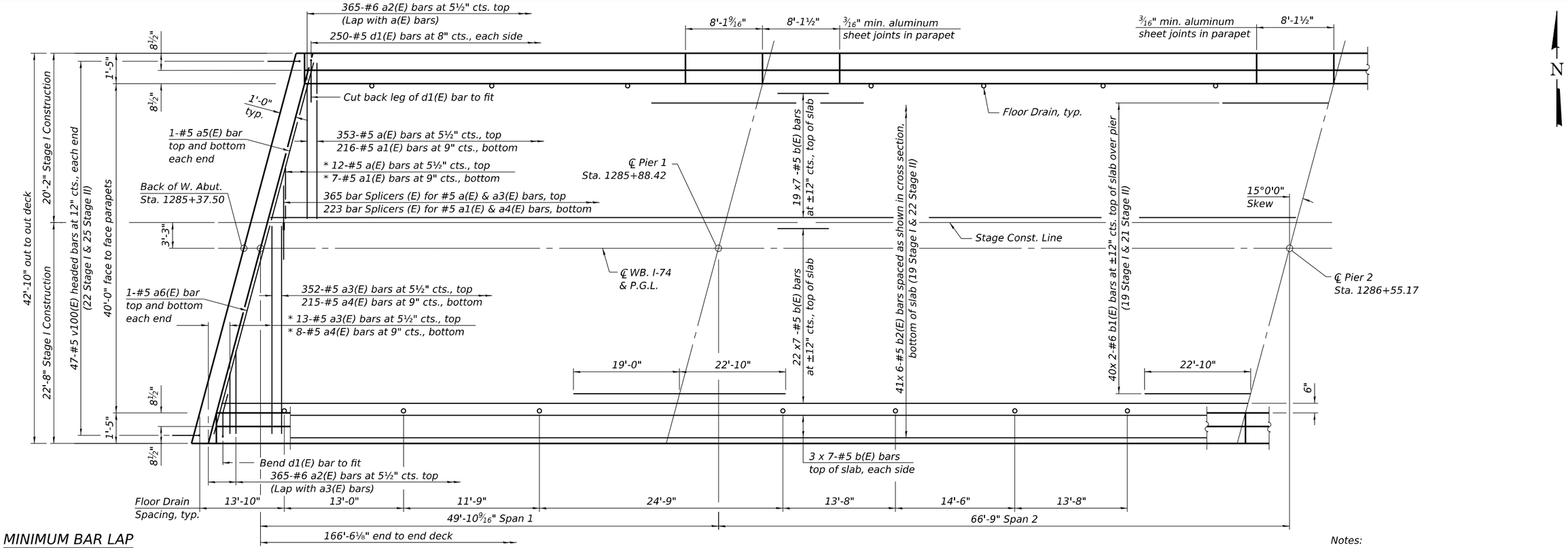

MINIMUM BAR LAP

#5 bar = 3'-10"
#6 bar = 5'-3"

* Order a(E), a1(E), a3(E) and a4(E) bars full length.
Cut to fit skew and use remainder of bars in opposite end.

SPAN 1 (SPAN 3 SIMILAR)

SPAN 2

PARTIAL PLAN

Notes:
See sheet S-20 for superstructure details and Bill of Material.
Bars indicated thus 20 x 3-#5 etc. indicates 20 lines of bars with 3 lengths per line.

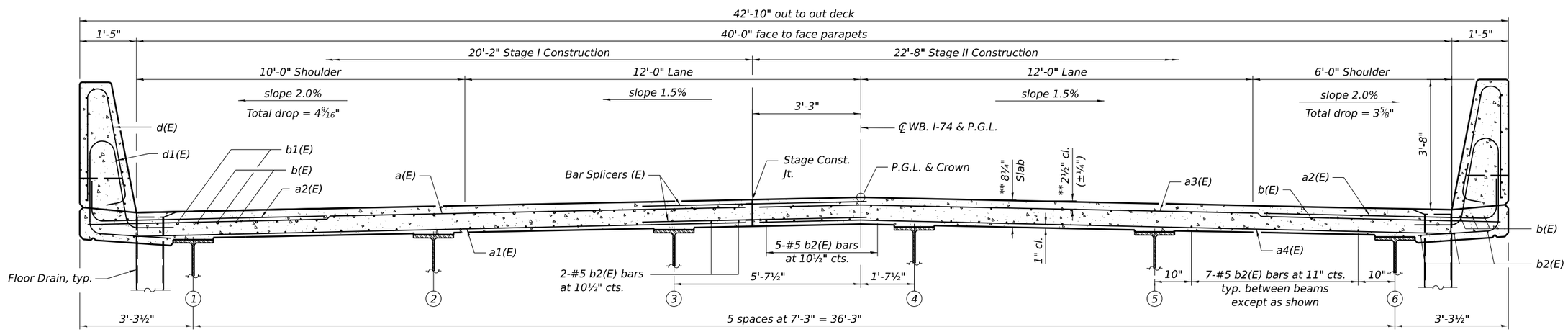

NEAR PIER

NEAR MIDSPAN

CROSS SECTION

(Looking East)

** Prior to Grinding

MODEL: Default
FILE NAME: P:\Projects\22000\22311C_DESIGN\01_Discipline\a_Civil\Working\Sheets\Bridge\D5_70D66_Super-2.dgn

6/23/2025 10:28:57 AM

EPSTEIN	USER NAME = asharghi	DESIGNED - AS	REVISED -	STATE OF ILLINOIS DEPARTMENT OF TRANSPORTATION	SUPERSTRUCTURE PLAN STRUCTURE NO. 092-0211
		CHECKED - TCG	REVISED -		
	PLOT SCALE = 0.167 ' / in.	DRAWN - AS	REVISED -		SHEET S-19 OF S-40 SHEETS
	PLOT DATE = 6/23/2025	CHECKED - TCG	REVISED -		

F.A. RTE.	SECTION	COUNTY	TOTAL SHEETS	SHEET NO.
74	(92-9)BR	VERMILION	87	52
		CONTRACT NO. 70D66		
		ILLINOIS	FED. AID PROJECT	

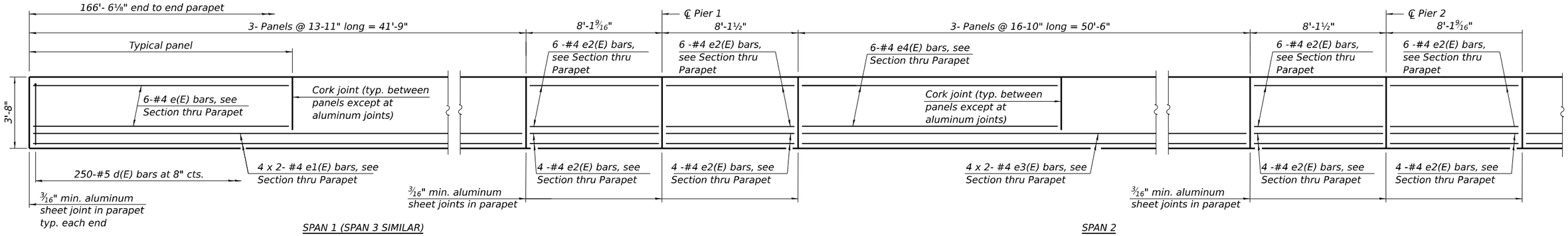

INSIDE ELEVATION OF PARAPET

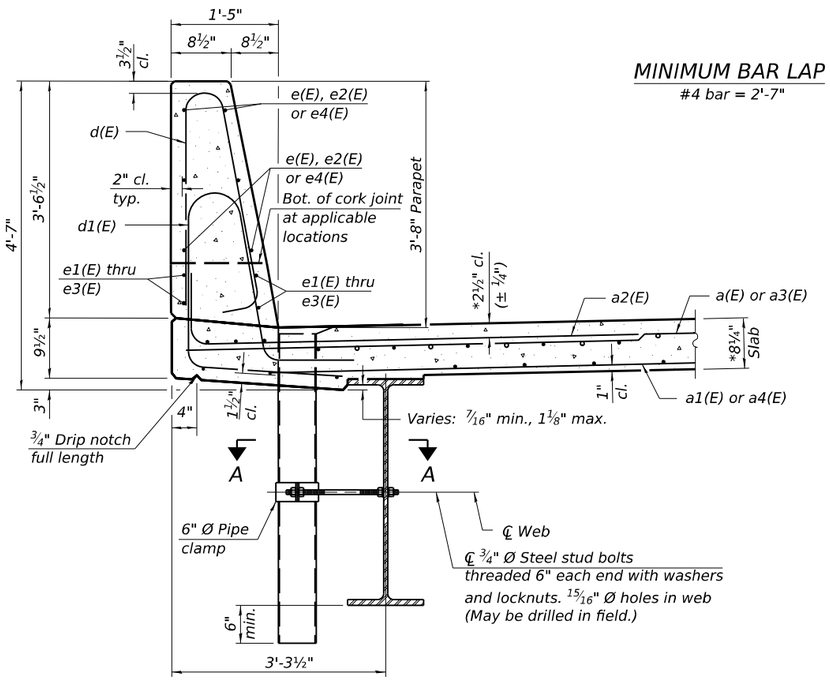

MINIMUM BAR LAP

#4 bar = 2'-7"

SECTION THRU PARAPET

* Prior to Grinding

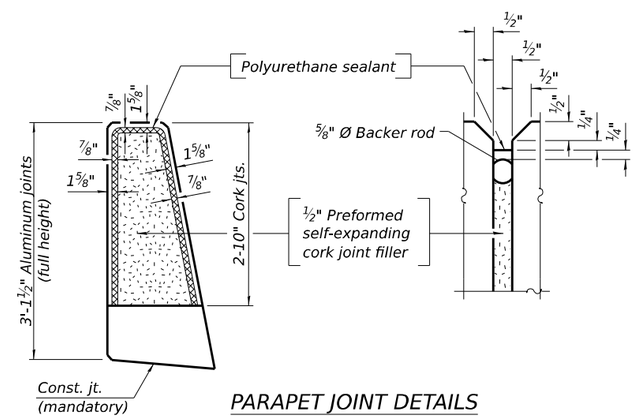

PARAPET JOINT DETAILS

Notes:

Fiberglass pipe shall conform to ASTM D2996, with short-time rupture strength hoop tensile stress of 30,000 p.s.i. minimum.

Floor drains need not be painted.

The top portion of aluminum floor drains shall be coated with 5 mils of either bitumen paint or epoxy paint to minimize reaction with wet concrete.

The clamping device shall be galvanized according to AASHTO M 232. Cost of clamping device included with Floor Drains.

The 3/16" min. aluminum sheet shall be ASTM B 209 alloy 3003-H14 and coated with 5 mils of either bitumen paint or epoxy paint to minimize reaction with wet concrete. Cost included with Concrete Superstructure.

The polyurethane sealant shall be according to Article 1050.04 of the Std. Spec. and the color shall be gray.

Bar terminators, paid for separately. See Total Bill of Material.

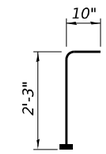

BAR v100(E)

(Headed. 188-#5 Bar terminators)

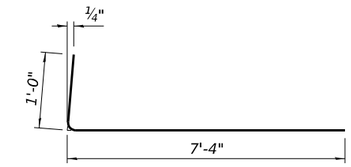

BAR a2(E)

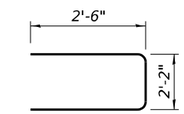

BAR s10(E)

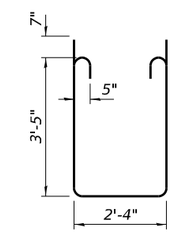

BAR s11(E)

SUPERSTRUCTURE BILL OF MATERIAL

Bar	No.	Size	Length	Shape
a(E)	730	#5	19'-10"	
a1(E)	446	#5	19'-10"	
a2(E)	1460	#6	8'-4"	
a3(E)	730	#5	22'-4"	
a4(E)	446	#5	22'-4"	
a5(E)	8	#5	20'-7"	
a6(E)	8	#5	23'-2"	
b(E)	658	#5	27'-0"	
b1(E)	320	#6	24'-0"	
b2(E)	492	#5	30'-11"	
d(E)	1000	#5	7'-0"	
d1(E)	1000	#5	8'-4"	
e(E)	144	#4	13'-7"	
e1(E)	64	#4	22'-1"	
e2(E)	160	#4	7'-10"	
e3(E)	32	#4	26'-7"	
e4(E)	72	#4	16'-6"	
m10(E)	16	#6	20'-7"	
m11(E)	48	#6	7'-2"	
m12(E)	24	#6	3'-1"	
m13(E)	12	#6	4'-9"	
m14(E)	12	#6	2'-2"	
m15(E)	16	#6	23'-2"	
s20(E)	164	#5	7'-2"	
s21(E)	164	#5	10'-4"	
v100(E)	188	#5	3'-1"	
Reinforcement Bars, Epoxy Coated			Lbs.	142,140
Concrete Superstructure			Cu. Yds.	457.0

Bars indicated thus 1 x 2-#4 etc. indicates 1 line of bars with 2 lengths per line.

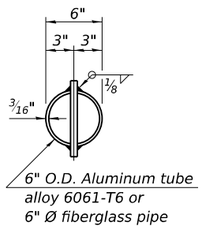

TOP PLAN

(Showing aluminum tube)

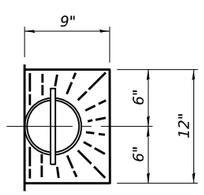

TOP PLAN

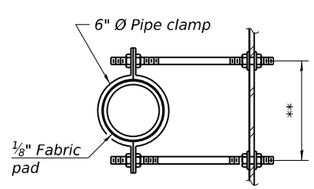

SECTION A-A

**Dimension as required by pipe clamp

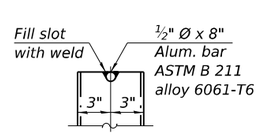

ALUMINUM TUBE

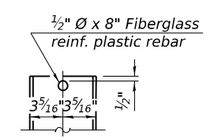

FIBERGLASS PIPE

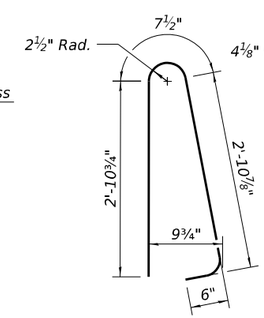

BAR d(E)

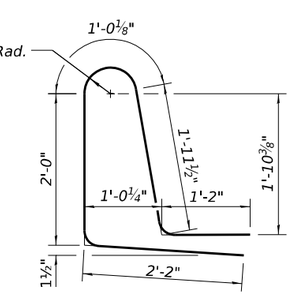

BAR d1(E)

MODEL: Default
FILE NAME: P:\Projects\22000\02351\C_DESIGN\01_Discipline\a_Civil\Working\Sheets\Bridge\D5_70D66_Super-3.dgn

6/23/2025 10:28:58 AM

EPSTEIN

USER NAME = asharghi	DESIGNED - AS	REVISED -		
	CHECKED - TCG	REVISED -		
PLOT SCALE = 0.167 ' / in.	DRAWN - AS	REVISED -		
PLOT DATE = 6/23/2025	CHECKED - TCG	REVISED -		

STATE OF ILLINOIS
DEPARTMENT OF TRANSPORTATION

SUPERSTRUCTURE DETAILS
STRUCTURE NO. 092-0210 (E.B.) & 092-0211 (W.B.)

SHEET S-20 OF S-40 SHEETS

F.A. RTE.	SECTION	COUNTY	TOTAL SHEETS	SHEET NO.
74	(92-9)BR	VERMILION	87	53
		CONTRACT NO. 70D66		
		ILLINOIS	FED. AID PROJECT	

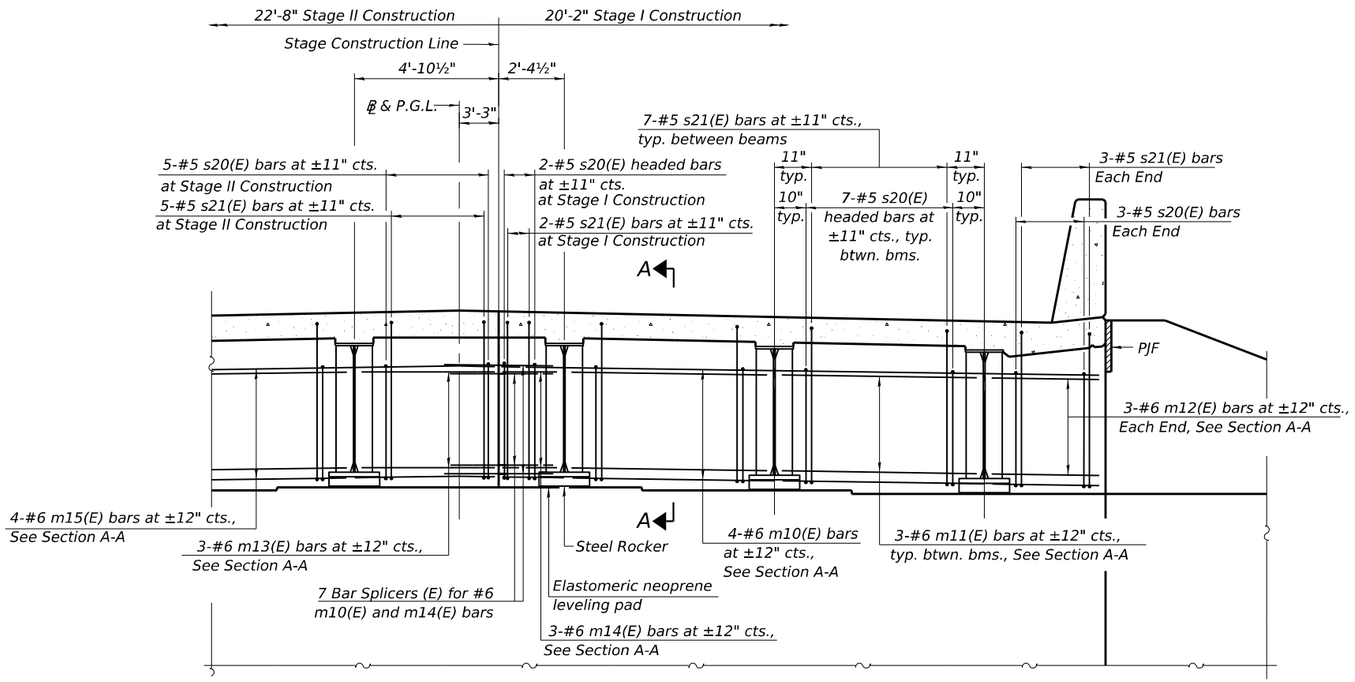

DIAPHRAGM AT ABUTMENT

(Looking East (E.B. Structure) - Looking West (W.B. Structure))
(Symmetrical about ℄ F.A.I. 74)

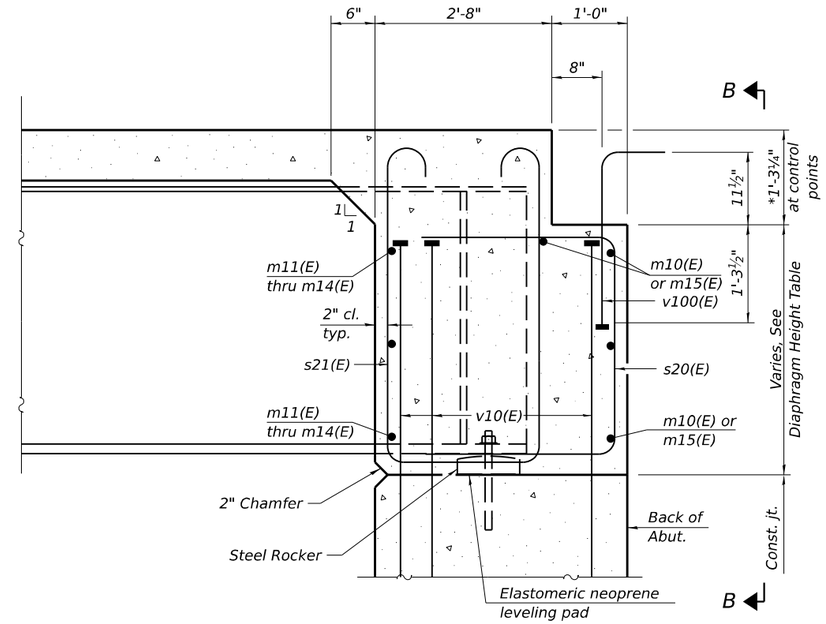

SECTION A-A

(at Rt. ∠'s)

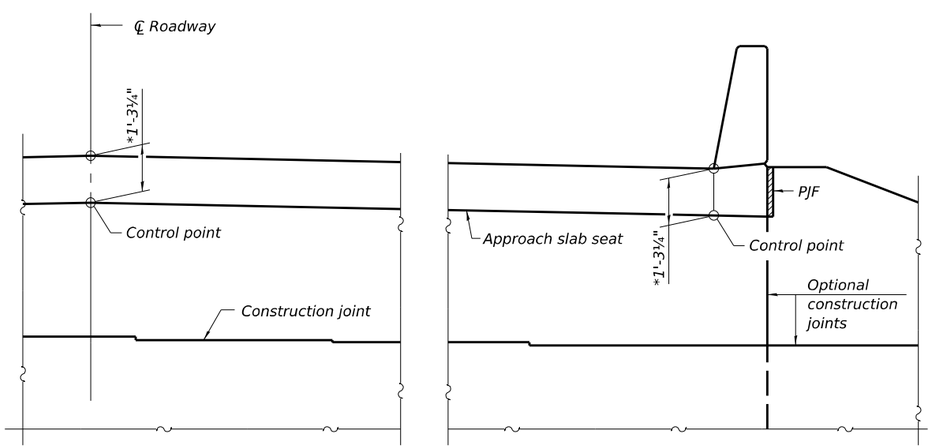

VIEW B-B

* Prior to Grinding

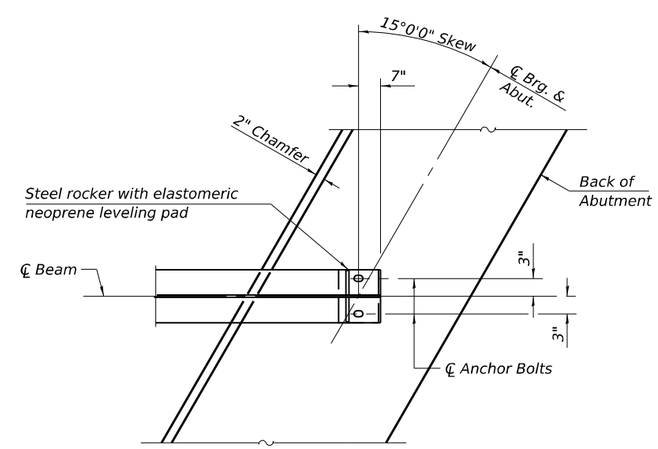

PLAN AT ABUTMENT

(Showing bottom flange of beam)

DIAPHRAGM HEIGHT TABLE

Location		Min.	Max.
SN 092-0210	W. Abut	2'-5⅛"	2'-6⅞"
	E. Abut	2'-5"	2'-6⅞"
SN 092-0211	W. Abut	2'-4⅞"	2'-7"
	E. Abut	2'-4¾"	2'-6⅞"

Notes:
See sheet S-20 for superstructure details and Bill of Material.
See sheet S-24 for PJF details.
The s10(E) and s11(E) bars shall be placed parallel to the beams. Spacing for these bars shall be at right angles to the beams.
The approach slab seat shall have a constant slope determined from the control points shown.

MODEL: Default
FILE NAME: P:\Projects\22000\22351\C_DESIGN\01_Discipline\a_Civil\WorkingSheets\Bridge\D5_70D66_AbutDiaphragm.dgn

EPSTEIN

USER NAME = asharghi	DESIGNED - AS	REVISED -	
	CHECKED - TCG	REVISED -	
PLOT SCALE = 0.167 ' / in.	DRAWN - AS	REVISED -	
PLOT DATE = 6/23/2025	CHECKED - TCG	REVISED -	

STATE OF ILLINOIS
DEPARTMENT OF TRANSPORTATION

DIAPHRAGM DETAILS
STRUCTURE NO. 092-0210 (E.B.) & 092-0211 (W.B.)

SHEET S-21 OF S-40 SHEETS

F.A. RTE.	SECTION	COUNTY	TOTAL SHEETS	SHEET NO.
74	(92-9)BR	VERMILION	87	54
		CONTRACT NO. 70D66		
	ILLINOIS	FED. AID PROJECT		

6/23/2025 10:28:59 AM

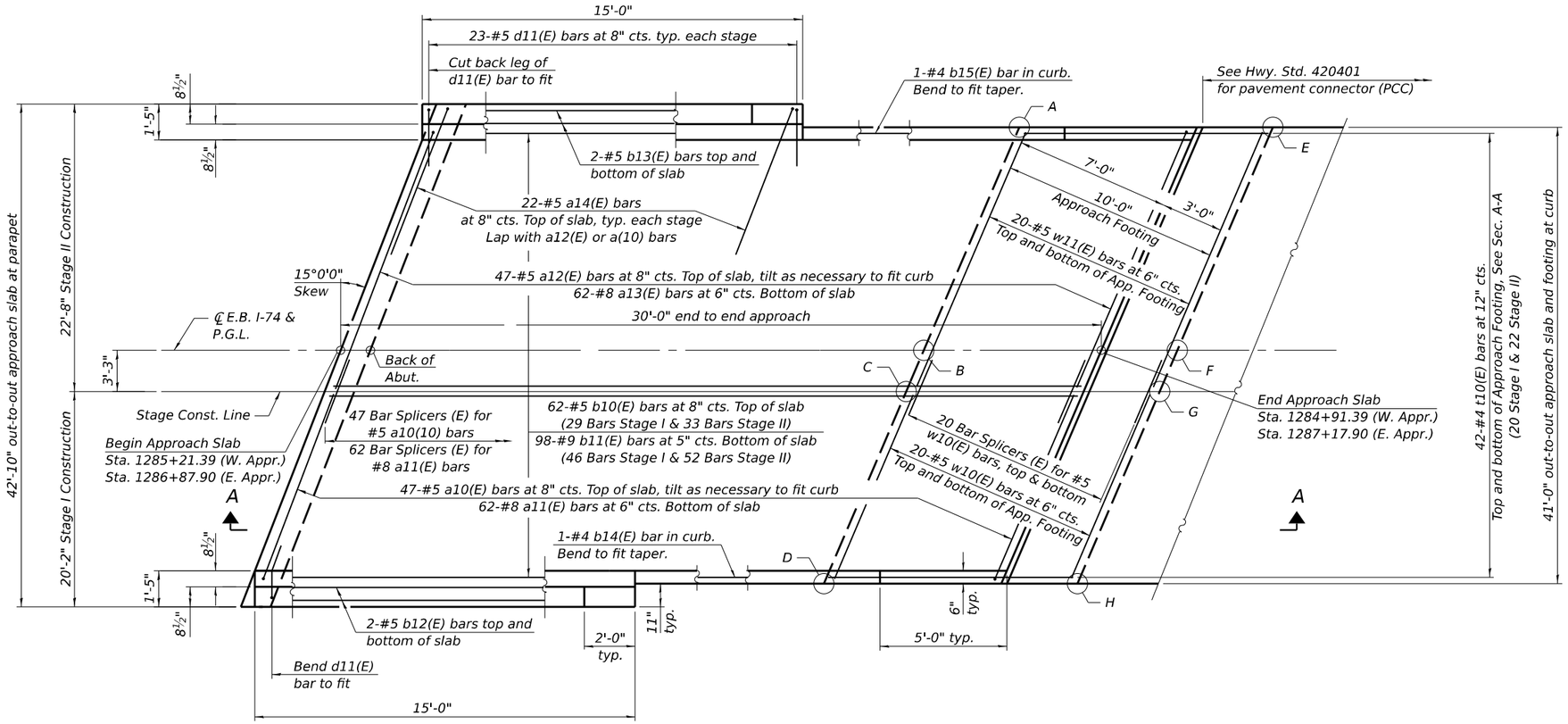

PLAN

(East approach slab shown; West approach slab similar but reversed.)

TOP AND BOTTOM ELEVATIONS FOR APPROACH FOOTING

West Approach			East Approach		
Point	Top	Bottom	Point	Top	Bottom
A	648.43	647.60	A	647.99	647.16
B	648.76	647.92	B	648.32	647.48
C	648.71	647.88	C	648.27	647.44
D	648.34	647.50	D	647.93	647.10
E	648.43	647.60	E	647.93	647.09
F	648.78	647.95	F	648.29	647.46
G	648.74	647.90	G	648.25	647.41
H	648.33	647.50	H	647.91	647.08

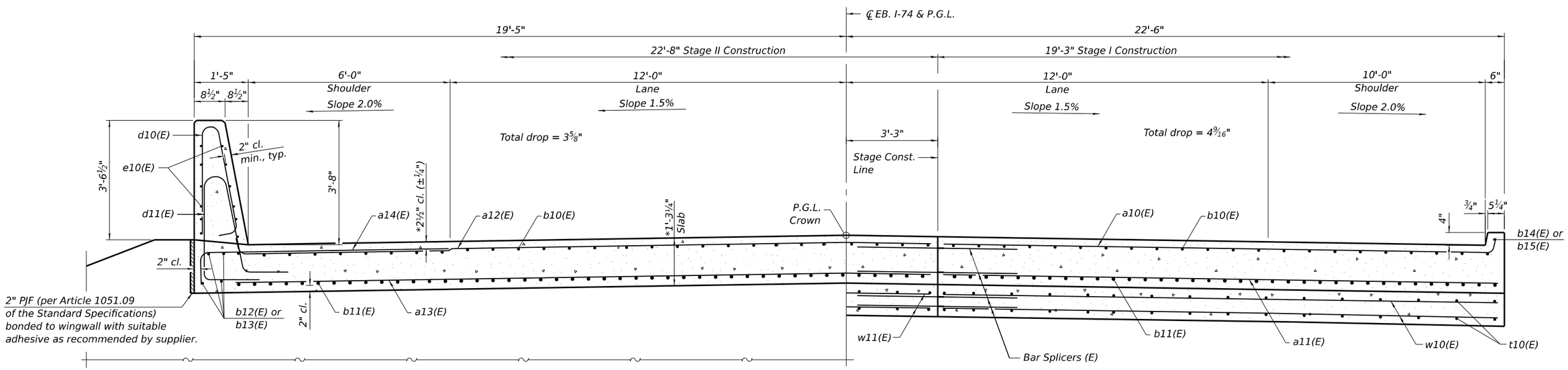

NEAR ABUTMENT

CROSS SECTION

(Looking East)

* Prior to Grinding

AT APPROACH FOOTING

(Sheet 1 of 3)

EPSTEIN	USER NAME = asharghi	DESIGNED - AS	REVISED -	STATE OF ILLINOIS DEPARTMENT OF TRANSPORTATION	BRIDGE APPROACH SLAB STRUCTURE NO. 092-0210	F.A. RTE.	SECTION	COUNTY	TOTAL SHEETS	SHEET NO.
		CHECKED - TCG	REVISED -			74	(92-9)BR	VERMILION	87	55
	PLOT SCALE = 0.167 ' / in.	DRAWN - AS	REVISED -					CONTRACT NO. 70D66		
	PLOT DATE = 6/23/2025	CHECKED - TCG	REVISED -		SHEET S-22 OF S-40 SHEETS		ILLINOIS	FED. AID PROJECT		

MODEL: Default
FILE NAME: P:\Projects\22000\22351\C_DESIGN\01_Discipline\a_Civil\Working\Sheets\Bridge\D5_70D66_AppSlab-1.dgn
6/23/2025 10:29:00 AM

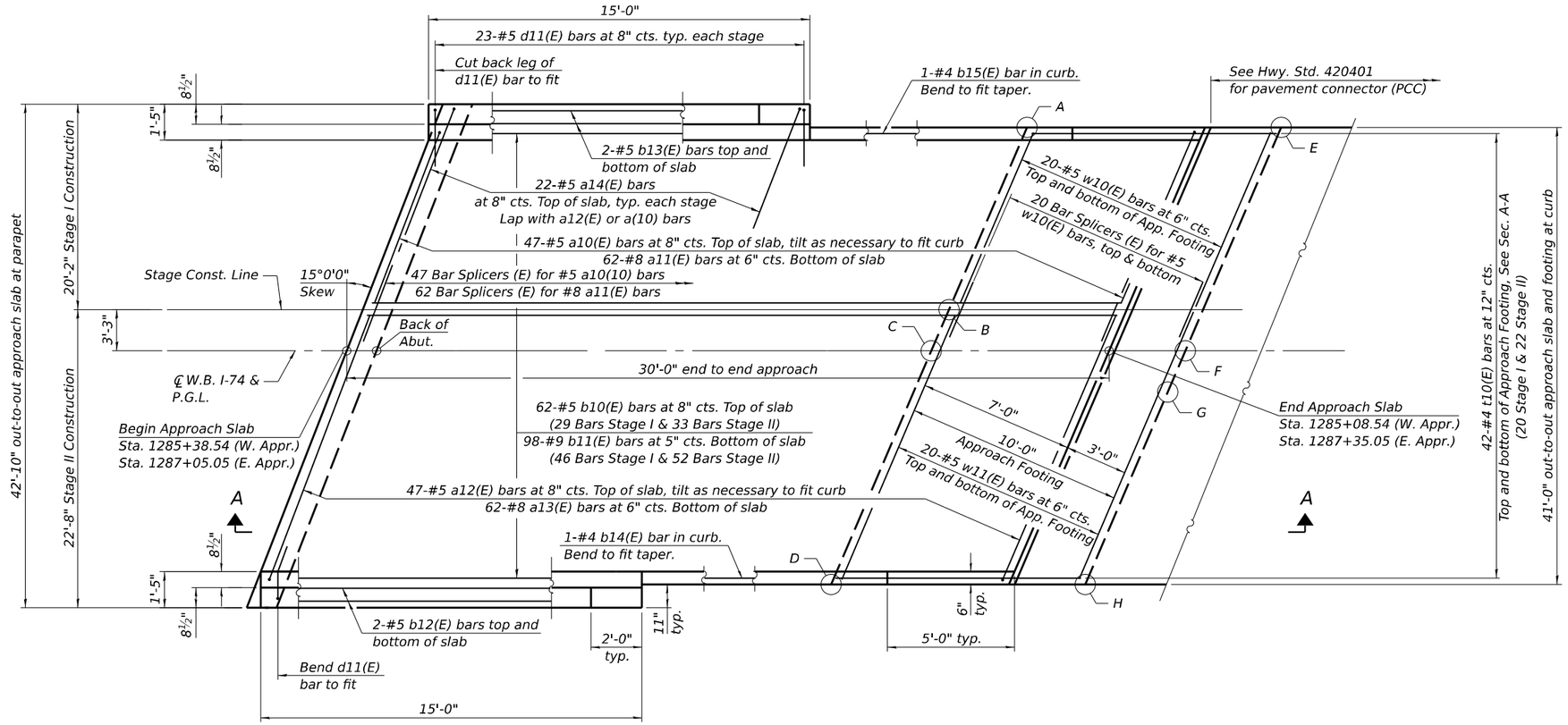

PLAN

(East approach slab shown; West approach slab similar but reversed.)

TOP AND BOTTOM ELEVATIONS FOR APPROACH FOOTING

West Approach			East Approach		
Point	Top	Bottom	Point	Top	Bottom
A	648.44	647.61	A	647.62	646.79
B	648.81	647.97	B	648.10	647.26
C	648.86	648.02	C	648.15	647.31
D	648.56	647.73	D	647.82	646.99
E	648.47	647.64	E	647.55	646.72
F	648.83	648.00	F	648.07	647.24
G	648.88	648.05	G	648.12	647.29
H	648.50	647.67	H	647.75	646.92

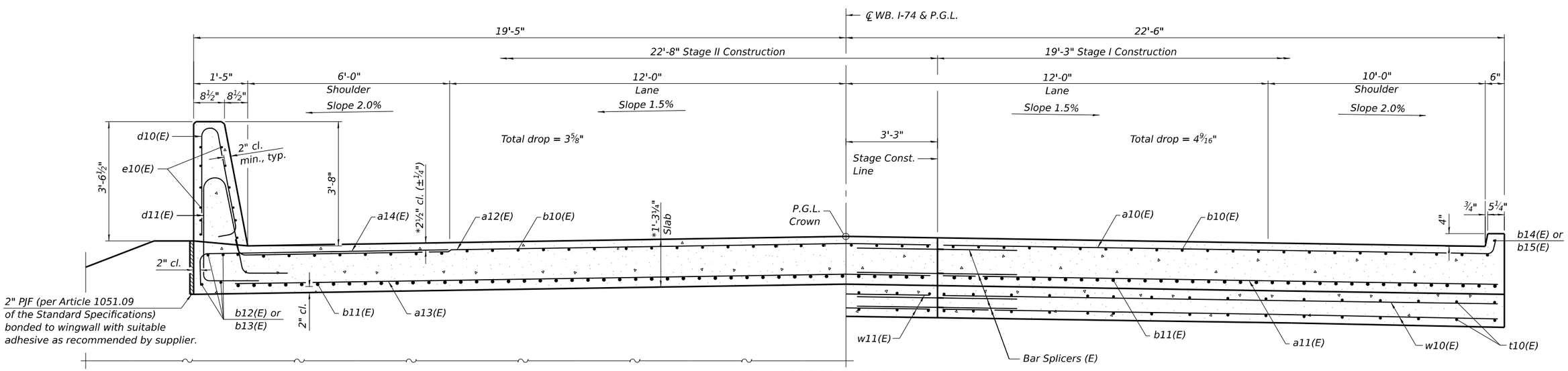

NEAR ABUTMENT

CROSS SECTION

(Looking West)
* Prior to Grinding

AT APPROACH FOOTING

(Sheet 2 of 3)

EPSTEIN	USER NAME = asharghi	DESIGNED - AS	REVISED -	STATE OF ILLINOIS DEPARTMENT OF TRANSPORTATION	BRIDGE APPROACH SLAB STRUCTURE NO. 092-0211	F.A. RTE.	SECTION	COUNTY / TOTAL SHEETS / SHEET NO.
		CHECKED - TCG	REVISED -			74	(92-9)BR	VERMILION / 87 / 56
	PLOT SCALE = 0.167 ' / in.	DRAWN - AS	REVISED -					CONTRACT NO. 70D66
	PLOT DATE = 6/23/2025	CHECKED - TCG	REVISED -		SHEET S-23 OF S-40 SHEETS		ILLINOIS	FED. AID PROJECT

MODEL: Default
FILE NAME: P:\Projects\22000\22351\C_DESIGN\01_Discipline\a_Civil\Working\Sheets\Bridge\D5_70D66_AppSlab-2.dgn
6/23/2025 10:29:00 AM

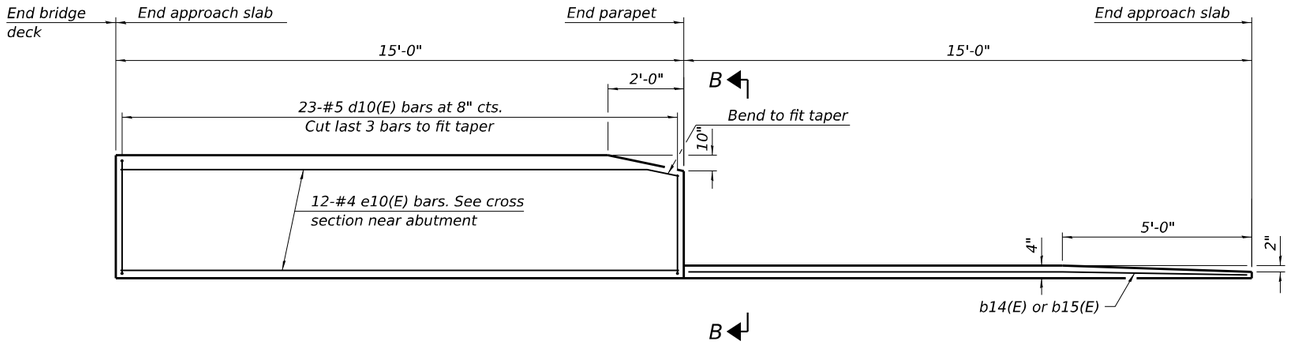

INSIDE ELEVATION OF PARAPET AND CURB

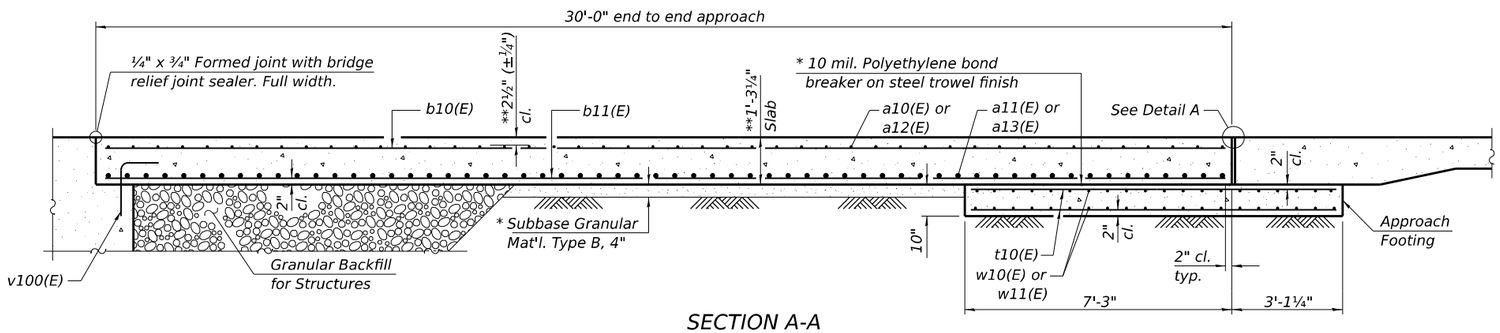

SECTION A-A

** Prior to Grinding

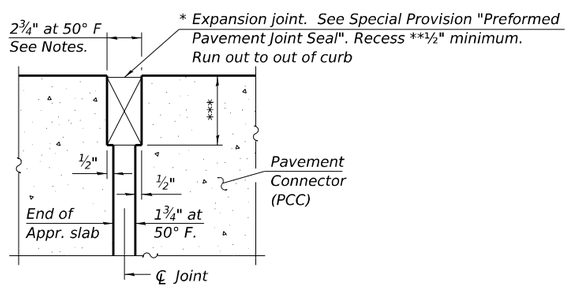

DETAIL A

(at Rt. ∠'s)

* Cost included with Concrete Superstructure (Approach Slab).

*** Per manufacturer recommendations

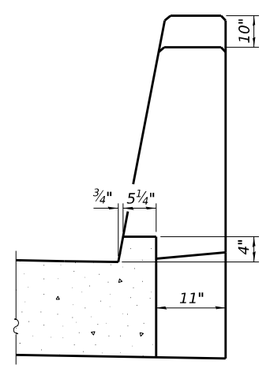

VIEW B-B

Notes:

The joint opening shall be adjusted for temperature per Article 520.04 of the Standard Specifications. However, since this detail is for jointless structures, the length of bridge used to calculate the adjustment shall be equal to half the total bridge length plus the length of the bridge approach slab.

Parapet concrete shall be paid for as Concrete Superstructure.

Approach slab shall be paid for as Concrete Superstructure (Approach Slab).

Approach footing concrete shall be paid for as Concrete Structures.

The approach footing maximum applied service bearing pressure (Qmax) = 2.0 ksf.

Cost of excavation for approach footing included with Concrete Structures.

For Granular Backfill for Structures and drainage treatment details, see sheet S-2.

For Type 6 terminal connections see Highway Standard 631031.

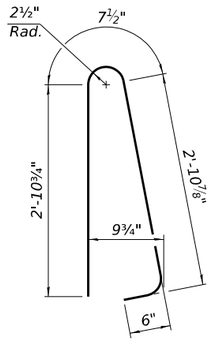

BAR d10(E)

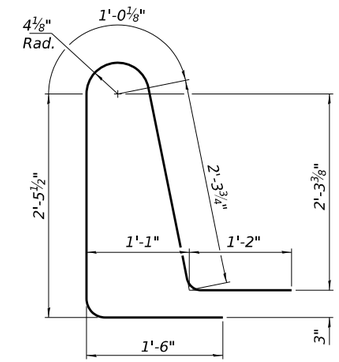

BAR d11(E)

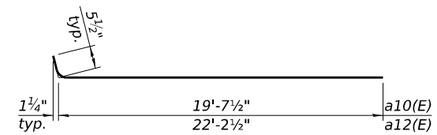

BAR a10(E) & a12(E)

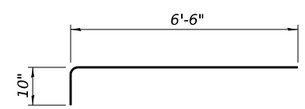

BAR a14(E)

FOUR APPROACHES BILL OF MATERIAL

Bar	No.	Size	Length	Shape
a10(E)	188	#5	20'-1"	
a11(E)	248	#8	19'-7"	
a12(E)	188	#5	22'-8"	
a13(E)	248	#8	22'-2"	
a14(E)	176	#5	7'-4"	
b10(E)	248	#5	29'-8"	
b11(E)	392	#9	29'-8"	
b12(E)	16	#5	14'-8"	
b13(E)	16	#5	14'-8"	
b14(E)	4	#4	14'-8"	
b15(E)	4	#4	14'-8"	
d10(E)	184	#5	7'-0"	
d11(E)	184	#5	8'-6"	
e10(E)	96	#4	14'-8"	
t10(E)	168	#4	10'-0"	
w10(E)	160	#5	19'-7"	
w11(E)	160	#5	22'-2"	
Concrete Superstructure			Cu. Yd.	16.9
Concrete Superstructure (Approach Slab)			Cu. Yd.	236.8
Concrete Structures			Cu. Yd.	54.3
Reinforcement Bars, Epoxy Coated			Pound	97,160

(Sheet 3 of 3)

MODEL: Default
FILE NAME: P:\Projects\22000\22351\C_DESIGN\0_Discipline\a_Civil\WorkingSheets\Bridge\05_70D66_AppSlab-3.dgn

EPSTEIN

USER NAME = asharghi	DESIGNED - AS	REVISED -	STATE OF ILLINOIS DEPARTMENT OF TRANSPORTATION	BRIDGE APPROACH SLAB DETAILS STRUCTURE NO. 092-0210 (E.B.) & 092-0211 (W.B.)
	CHECKED - TCG	REVISED -		
PLOT SCALE = 0.167 ' / in.	DRAWN - AS	REVISED -		
PLOT DATE = 6/23/2025	CHECKED - TCG	REVISED -		SHEET S-24 OF S-40 SHEETS

F.A. RTE.	SECTION	COUNTY	TOTAL SHEETS	SHEET NO.
74	(92-9)BR	VERMILION	87	57
		CONTRACT NO. 70D66		
	ILLINOIS	FED. AID PROJECT		

6/23/2025 10:29:01 AM

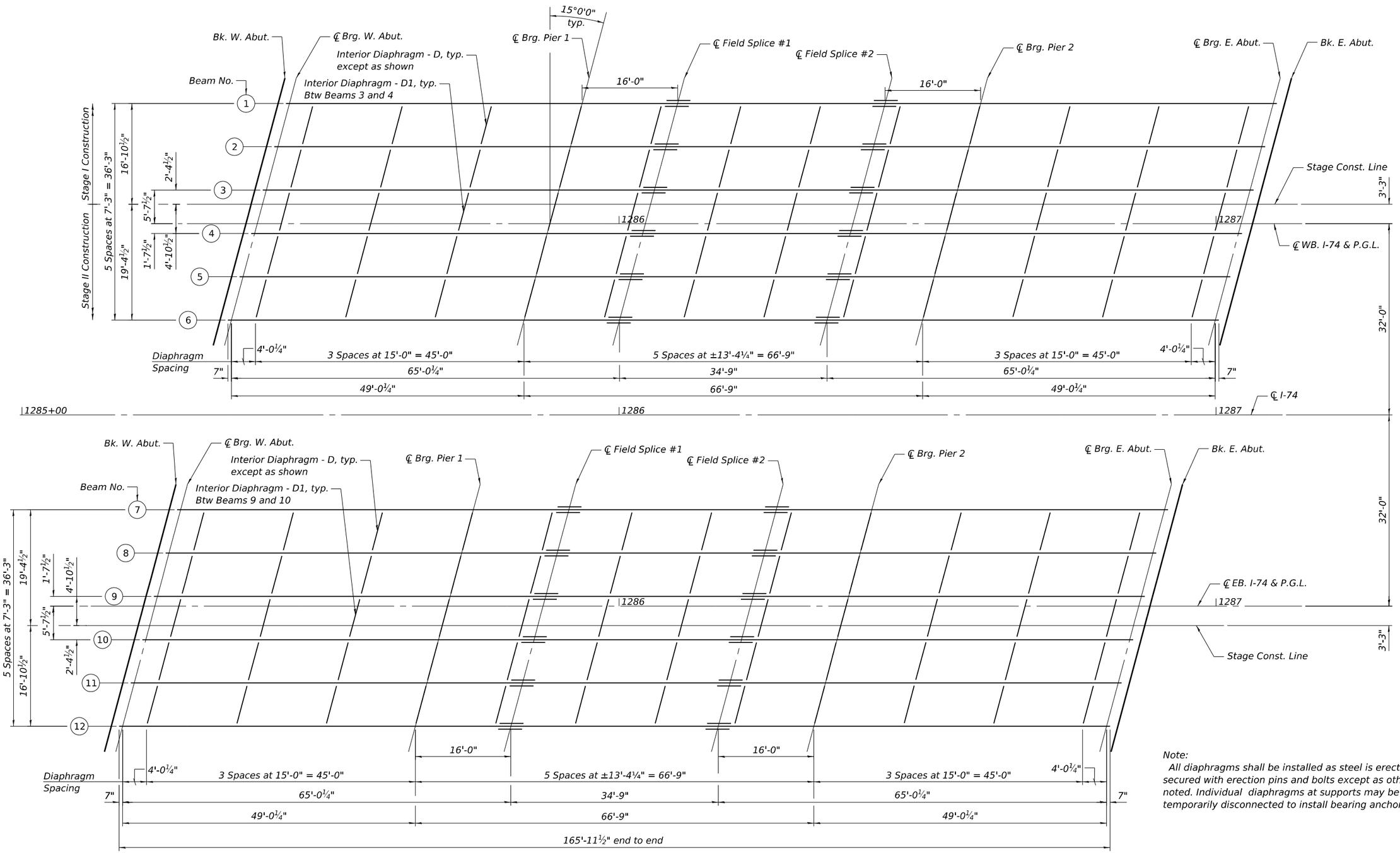

PLAN

Note:
All diaphragms shall be installed as steel is erected and secured with erection pins and bolts except as otherwise noted. Individual diaphragms at supports may be temporarily disconnected to install bearing anchor bolts.

MODEL: Default
FILE NAME: P:\Projects\22000\22351C_DESIGN\01_Discipline\a_Civil\Working\Sheets\Bridge\05_70D66_Framing.dgn

EPSTEIN

USER NAME = asharghi	DESIGNED - AS	REVISED -	
	CHECKED - TCG	REVISED -	
PLOT SCALE = 16.000 ' / in.	DRAWN - AS	REVISED -	
PLOT DATE = 6/23/2025	CHECKED - TCG	REVISED -	

STATE OF ILLINOIS
DEPARTMENT OF TRANSPORTATION

FRAMING PLAN
STRUCTURE NO. 092-0210 (E.B.) & 092-0211 (W.B.)

SHEET S-25 OF S-40 SHEETS

F.A. RTE.	SECTION	COUNTY	TOTAL SHEETS	SHEET NO.
74	(92-9)BR	VERMILION	87	58
		CONTRACT NO. 70D66		
	ILLINOIS	FED. AID PROJECT		

6/23/2025 10:29:02 AM

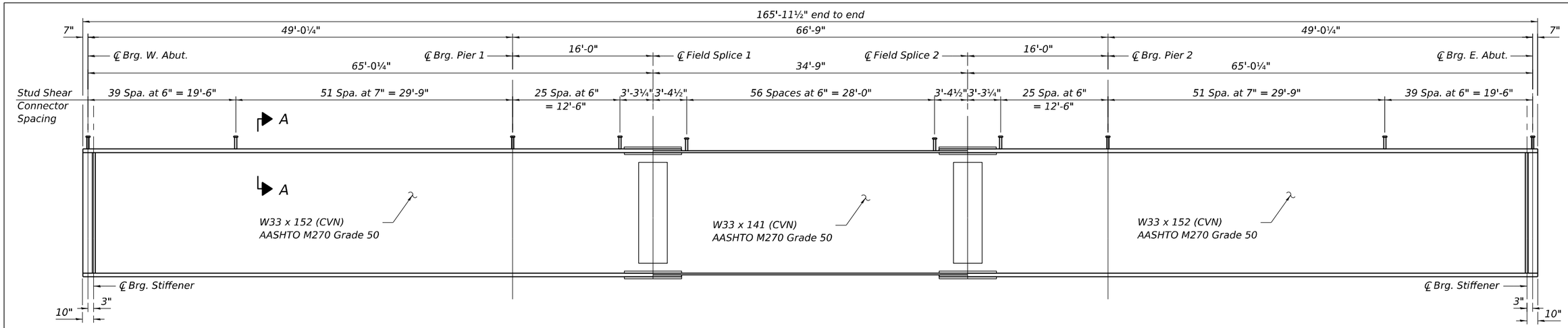

BEAM ELEVATION

Symmetrical 3 span

INTERIOR GIRDER MOMENT TABLE		0.4 Sp. 1 or 0.6 Sp. 3	Pier 1 & 2	0.5 Sp. 2
I_s	(in^4)	8,160	8,160	7,450
I_c (n)	(in^4)	21,961	———	20,472
I_c (3n)	(in^4)	16,420	———	15,386
I_c (cr)	(in^4)	———	11,111	———
S_s	(in^3)	487	487	448
S_c (n)	(in^3)	710	———	658
S_c (3n)	(in^3)	647	———	601
S_c (cr)	(in^3)	———	561	———
S_x	(in^3)	688	658	627
DC1	(k/')	1.01	1.01	1.00
M_{DC1}	('k)	142	332	195
DC2	(k/')	0.19	0.19	0.19
M_{DC2}	('k)	28	67	39
DW	(k/')	0.36	0.36	0.36
M_{DW}	('k)	54	127	74
LLDF		0.667	0.647	0.631
M_{LL+IM}	('k)	517	487	533
f_f (Strength I)	(ksi)	———	———	———
$M_u + \frac{1}{3} f_f S_x$	('k)	1,198	1,542	1,336
$\Phi_f M_n$	('k)	3,718	2,325	3,397
f_s DC1	(ksi)	3.5	8.2	5.2
f_s DC2	(ksi)	0.5	1.2	0.8
f_s DW	(ksi)	1.0	2.4	1.5
f_s (LL+IM)	(ksi)	8.7	8.2	9.7
f_f (Service II)	(ksi)	———	———	———
$f_s + f_f/2$ (Service II)	(ksi)	16.4	22.5	20.1
Service II Resistance	(ksi)	47.5	47.5	47.5
$f_s + f_f/3$ (Strength I)	(ksi)	———	———	———
$\Phi_f F_n$	(ksi)	———	———	———
V_f	(k)	37.8	53.0	37.7

GIRDER REACTION TABLE		Abut.	Pier
LLDF		0.761	0.761
OCF		1.05	1.05
R_{DC1}	(k)	17.5	61.8
R_{DC2}	(k)	3.3	12.4
R_{DW}	(k)	6.3	23.6
R_{LL}	(k)	56.8	85.9
R_{Im}	(k)	14.8	17.3
R_{Total} (Strength I)(Impact)	(k)	170.1	304.1
R_{Total} (Strength I)(No Impact)	(k)	155.4	286.8

I_s , S_s : Non-composite moment of inertia and section modulus of the steel section used for computing f_s (Total-Strength I, and Service II) due to non-composite dead loads ($in.^4$ and $in.^3$).

I_c (n), S_c (n): Composite moment of inertia and section modulus of the steel and deck based upon the modular ratio, "n", used for computing f_s (Total-Strength I, and Service II) in uncracked sections due to short-term composite live loads ($in.^4$ and $in.^3$).

I_c (3n), S_c (3n): Composite moment of inertia and section modulus of the steel and deck based upon 3 times the modular ratio, "3n", used for computing f_s (Total-Strength I, and Service II) in uncracked sections, due to long-term composite (superimposed) dead loads ($in.^4$ and $in.^3$).

I_c (cr), S_c (cr): Composite moment of inertia and section modulus of the steel and longitudinal deck reinforcement, used for computing f_s (Total-Strength I and Service II) in cracked sections, due to both short-term composite live loads and long-term composite (superimposed) dead loads ($in.^4$ and $in.^3$).

S_x : Section modulus about the major axis of a section to the controlling flange, tension or compression, taken as yield moment with respect to the controlling flange over the yield strength of the controlling flange ($in.^3$).

DC1: Un-factored non-composite dead load (kips/ft.).

M_{DC1}: Un-factored moment due to non-composite dead load (kip-ft.).

DC2: Un-factored long-term composite (superimposed excluding future wearing surface) dead load (kips/ft.).

M_{DC2}: Un-factored moment due to long-term composite (superimposed excluding future wearing surface) dead load (kip-ft.).

DW: Un-factored long-term composite (superimposed future wearing surface only) dead load (kips/ft.).

M_{DW} : Un-factored moment due to long-term composite (superimposed future wearing surface only) dead load (kip-ft.).

LLDF: Live Load Distribution Factor for moment and shear computed according to Article 4.6.2.2 and further IDOT provisions.

M_{LL+IM}: Un-factored live load moment plus dynamic load allowance (impact) (kip-ft.).

M_u : Strength I load combination of factored design moments (kip-ft.).
$1.25\ (M_{DC1} + M_{DC2}) + 1.5\ M_{DW} + 1.75\ M_{LL+IM}$

f_f : Factored calculated flange lateral bending stress as calculated using Article 6.10.1.6 and as further simplified by IDOT provisions (ksi).

$\Phi_f M_n$: Factored nominal flexural resistance of the section determined as specified in Article 6.10.7.1 or A6 as applicable (kip-ft.).

f_s DC1: Un-factored stress at edge of flange for controlling steel flange due to vertical non-composite dead loads as calculated below (ksi).
M_{DC1} / S_s

f_s DC2: Un-factored stress at edge of flange for controlling steel flange due to vertical composite dead loads as calculated below (ksi).
M_{DC2} / S_c (3n) or M_{DC2} / S_c (cr) as applicable.

f_s DW: Un-factored stress at edge of flange for controlling steel flange due to vertical composite future wearing surface loads as calculated below (ksi).
M_{DW} / S_c (3n) or M_{DW} / S_c (cr) as applicable.

f_s (LL+ IM): Un-factored stress at edge of flange for controlling steel flange due to vertical composite live load plus impact loads as calculated below (ksi).
M_{LL+IM} / S_c (n) or M_{LL+IM} / S_c (cr) as applicable.

$f_s + f_f / 2$ (Service II): Sum of stresses as computed below (ksi).
f_s DC1 + f_s DC2 + f_s DW + 1.3 f_s (LL+ IM) + f_f /2

Service II Resistance: Composite ($0.95R_hF_{yf}$) or noncomposite ($0.80R_hF_{yf}$) stress capacity according to Article 6.10.4.2 (ksi).

$f_s + f_f / 3$ (Strength I): Sum of stresses as computed below on non-compact sections (ksi).
1.25 (f_s DC1 + f_s DC2) + 1.5 f_s DW + 1.75 f_s (LL+ IM) + f_f /3

$\Phi_f F_n$: Factored nominal flexural resistance of the section as specified in Article 6.10.7.2 or 6.10.8 as applicable (ksi).

V_f: Maximum factored shear range in span computed according to Article 6.10.10.

OCF: Obtuse Correction Factor according to Article 4.6.2.2.3c or as further simplified by IDOT provisions.

R_{DC1}: Un-factored reaction due to non-composite dead load (kip).

R_{DC2}: Un-factored reaction due to long-term composite (superimposed excluding future wearing surface) dead load (kip).

R_{DW} : Un-factored reaction due to long-term composite (superimposed future wearing surface only) dead load (kip).

R_{LL} : Un-factored live load reaction (kip).

R_{IM} : Un-factored dynamic load allowance (impact) (kip).

R_{Total} (Strength I)(Impact): Strength I load combination of factored design reactions (kip).
1.25 ($R_{DC1} + R_{DC2}$) + 1.5R_{DW} + 1.75 ($R_{LL} + R_{IM}$)

R_{Total} (Strength I)(No Impact): Strength I load combination of factored design reactions, not including dynamic load allowance (Impact) (kip).
1.25 ($R_{DC1} + R_{DC2}$) + 1.5R_{DW} + 1.75 (R_{LL})

Notes:
See section A-A on sheet S-27 .
Load carrying components designated "CVN" shall conform to Charpy-V-Notch Impact Energy Requirement, Zone 2.

MODEL: Default
FILE NAME: P:\Projects\22000\22351C_DESIGN\01_Discipline\a_Civil\Working\Sheets\BridgeD5_70D66_Sht_Beam Elevation.dgn

EPSTEIN

USER NAME = asharghi	DESIGNED - AS	REVISED -	
	CHECKED - TCG	REVISED -	
PLOT SCALE = 0.167 ' / in.	DRAWN - AS	REVISED -	
PLOT DATE = 6/23/2025	CHECKED - TCG	REVISED -	

STATE OF ILLINOIS
DEPARTMENT OF TRANSPORTATION

BEAM ELEVATION
STRUCTURE NO. 092-0210 (E.B.) & 092-0211 (W.B.)

SHEET S-26 OF S-40 SHEETS

F.A. RTE.	SECTION	COUNTY	TOTAL SHEETS	SHEET NO.
74	(92-9)BR	VERMILION	87	59
		CONTRACT NO. 70D66		
		ILLINOIS	FED. AID PROJECT	

6/23/2025 10:29:03 AM

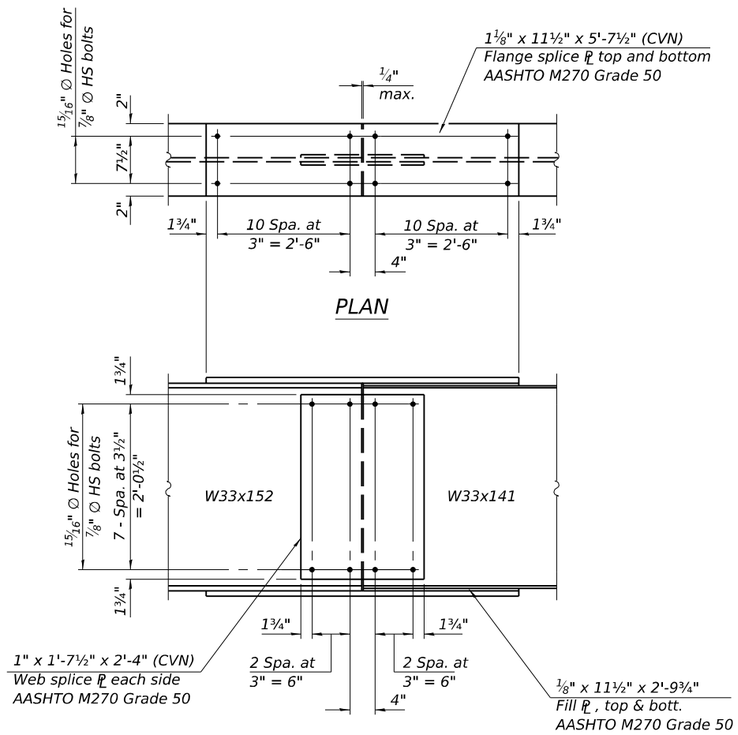

PLAN

ELEVATION

SPLICE DETAIL

(12 Required for SN 092-0210)
(12 Required for SN 092-0211)

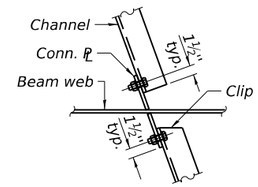

DETAIL A

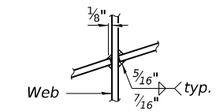

WEB WELD DETAIL

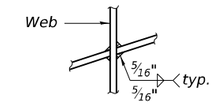

ALTERNATE WEB WELD DETAIL

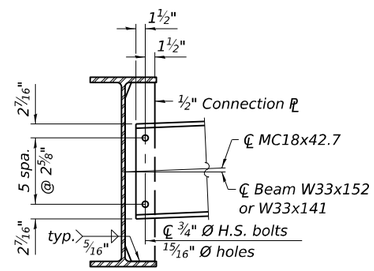

INTERIOR DIAPHRAGM - D

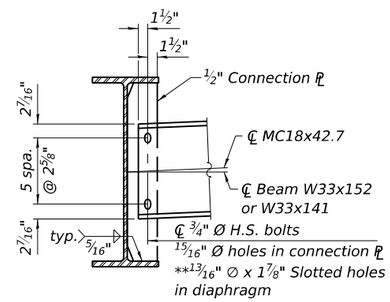

INTERIOR DIAPHRAGM - D1

** Use slotted holes in the channel on the Beam 4 side only.
Use 15/16" ∅ holes on the Beam 3 side of the channel.

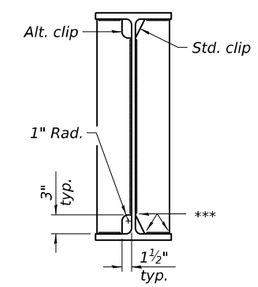

WELD LIMITS AND CLIP DETAILS

*** Stop welds ¼" (±⅛") from edges as shown. Typical.

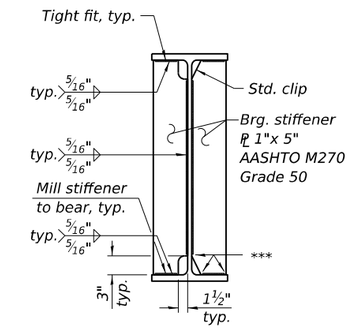

BEARING STIFFENER

Notes:
Load carrying components designated "CVN" shall conform to Charpy-V-Notch Impact Energy Requirement, Zone 2.
Two hardened washers required for each set of oversized holes.
Alternate channels of equal depth and weight are permitted to facilitate material acquisition. Alternate channels, if utilized, shall be provided at no additional cost to the Department.
The bolts for the lotted holes shall be finger tightened prior to the deck pour for Stage II Construction. Tighten bolts after deck is poured. Position slots so bolts start at one end with no concrete load and finish near the opposite end under deck load, allowing maximum displacement without laterally stressing main members.

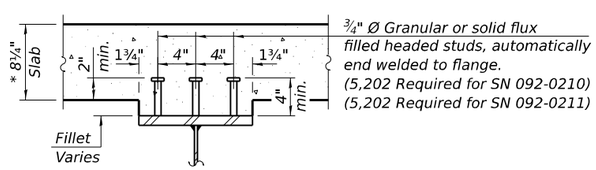

SECTION A-A

* Prior to grinding

**** TOP OF BEAM ELEVATIONS

	℄ Brg. W. Abut.	℄ Pier 1	℄ Field Splice 1	℄ Field Splice 2	℄ Pier 2	℄ Brg. E. Abut.
Beam 1	648.89	648.71	648.63	648.51	648.49	648.34
Beam 2	649.05	648.87	648.79	648.67	648.64	648.50
Beam 3	649.17	648.99	648.91	648.79	648.76	648.62
Beam 4	649.24	649.05	648.97	648.86	648.83	648.68
Beam 5	649.13	648.95	648.87	648.75	648.73	648.58
Beam 6	649.01	648.83	648.74	648.63	648.60	648.45
Beam 7	648.91	648.79	648.73	648.66	648.65	648.57
Beam 8	649.05	648.93	648.87	648.80	648.79	648.71
Beam 9	649.16	649.04	648.98	648.91	648.90	648.82
Beam 10	649.11	648.99	648.93	648.85	648.85	648.76
Beam 11	649.00	648.88	648.82	648.74	648.74	648.65
Beam 12	648.85	648.73	648.67	648.60	648.59	648.51

**** For fabrication only.

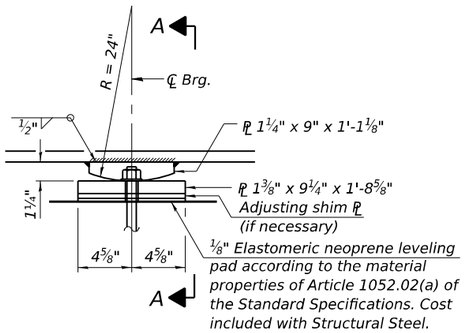

ELEVATION AT PIER

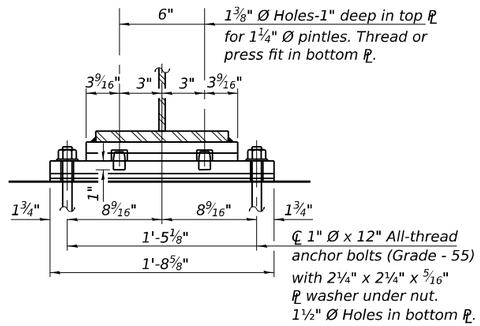

SECTION A-A

FIXED BEARING

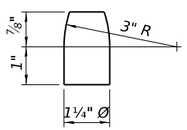

PINTLE

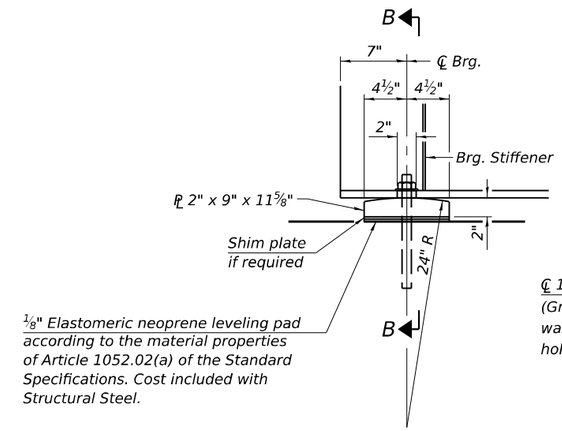

ELEVATION AT ABUTMENT

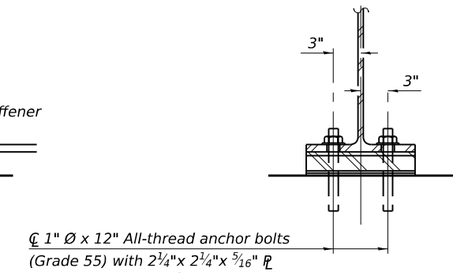

SECTION B-B

FIXED BEARING

Notes:

Anchor bolts at all supports shall be installed as each member is erected unless an equivalent temporary means of lateral restraint is used.

Two ⅛ in. adjusting shims shall be provided for each bearing in addition to all other plates or shims and placed as shown on bearing details.

All bearing plates, side retainers, anchor bolts, nuts, washers and pintles shall be galvanized according to AASHTO M111 or M232 as applicable.

The plates and pintles of the fixed bearings shall be AASHTO M270, Gr. 50.

BILL OF MATERIAL

Item	Unit	Total
Anchor Bolts, 1"	Each	96

MODEL: Default
FILE NAME: P:\Projects\22000\22351C_DESIGN\01_Discipline\a_Civil\Working\Sheets\Bridge\D5_70D66_Brg.dgn

6/23/2025 10:29:04 AM

EPSTEIN

USER NAME =	asharghi	DESIGNED -	AS	REVISED -	
		CHECKED -	TCG	REVISED -	
PLOT SCALE =	0.167 ' / in.	DRAWN -	AS	REVISED -	
PLOT DATE =	6/23/2025	CHECKED -	TCG	REVISED -	

STATE OF ILLINOIS
DEPARTMENT OF TRANSPORTATION

BEARING DETAILS
STRUCTURE NO. 092-0210 (E.B.) & 092-0211 (W.B.)

SHEET S-28 OF S-40 SHEETS

F.A. RTE.	SECTION	COUNTY	TOTAL SHEETS	SHEET NO.
74	(92-9)BR	VERMILION	87	61
		CONTRACT NO. 70D66		
	ILLINOIS	FED. AID PROJECT		

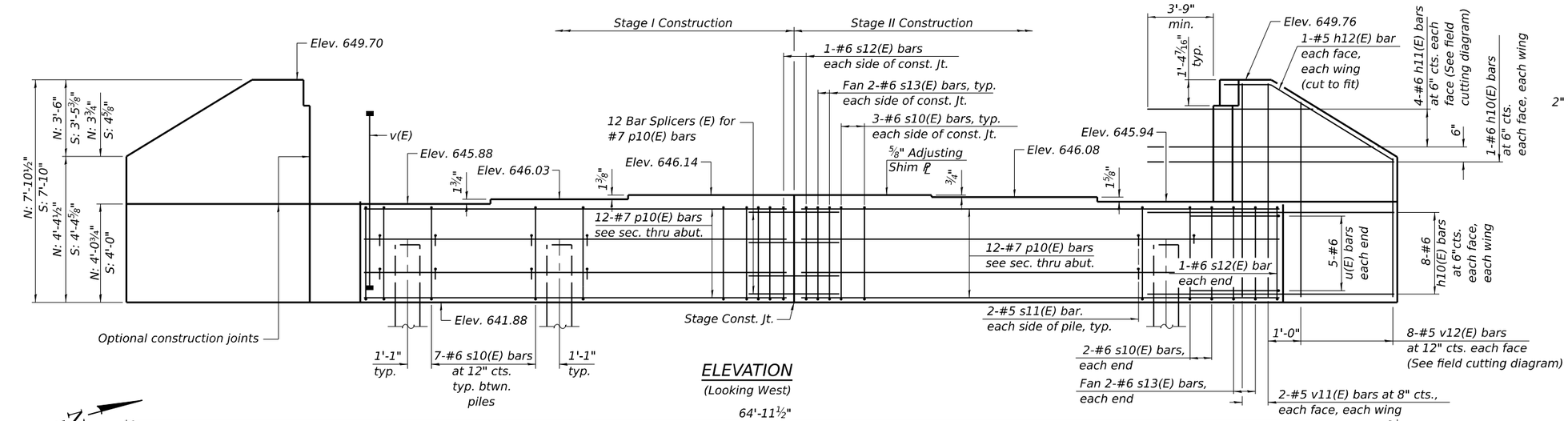

ELEVATION

(Looking West)

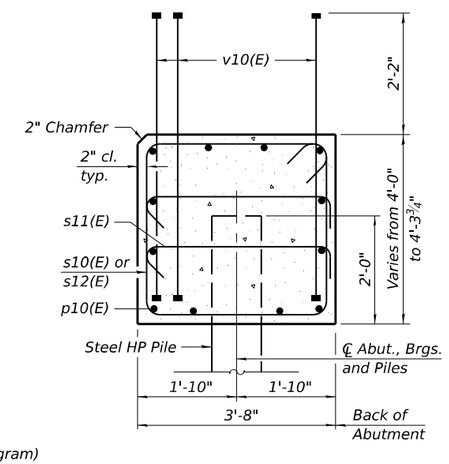

SEC. THRU ABUT.

Dimensions at right angles to abutment.

PILE DATA

Type: HP 12X63
Nominal Required Bearing: 497 kips
Factored Resistance Available: 273 kips
Est. Length: 43'-0"
No. Production Piles: 5
No. Test Piles: 1

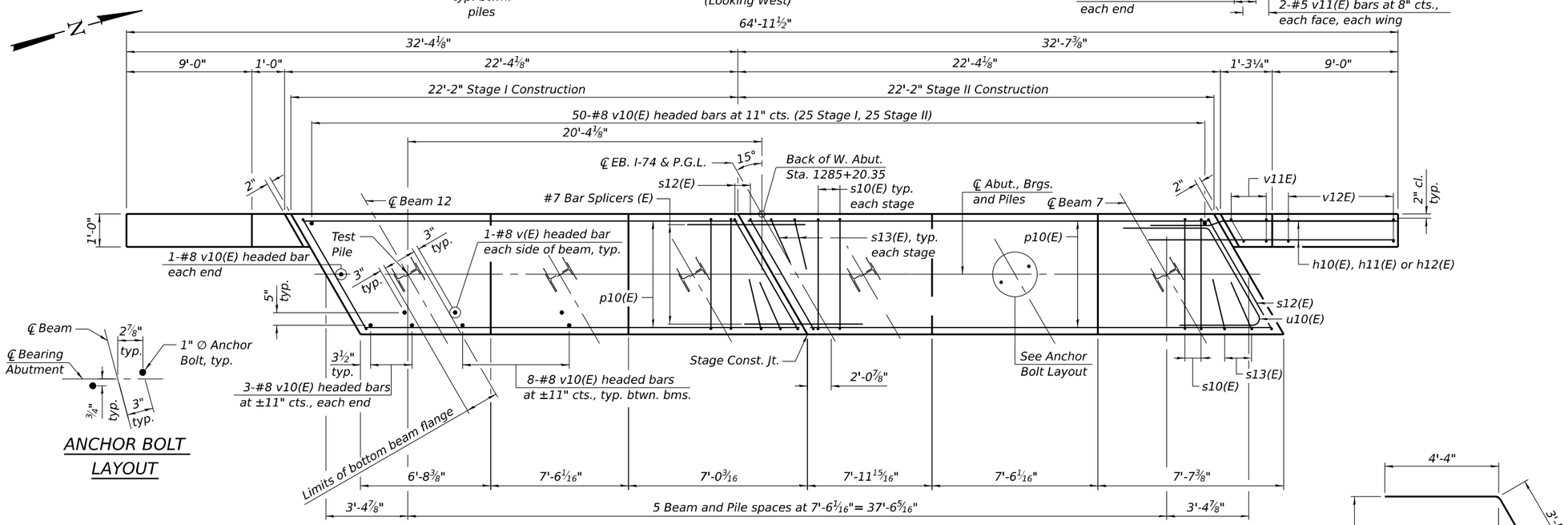

ANCHOR BOLT LAYOUT

PLAN

BILL OF MATERIAL

Bar	No.	Size	Length	Shape
h10(E)	36	#6	14'-6"	
h11(E)	8	#6	22'-4"	
h12(E)	4	#5	10'-0"	
p10(E)	24	#7	21'-10"	
s10(E)	36	#6	15'-4"	
s11(E)	24	#5	4'-4"	
s12(E)	4	#6	15'-7"	
s13(E)	8	#6	7'-8"	
u10(E)	10	#6	12'-1"	
v10(E)	108	#8	5'-10"	
v11(E)	8	#5	7'-6"	
v12(E)	16	#5	11'-6"	
Structure Excavation			Cu. Yd.	130
Concrete Structures			Cu. Yd.	29.8
Reinforcement Bars, Epoxy Coated			Pound	5,410
Furnishing Steel Piles HP 12X63			Foot	215
Driving Piles			Foot	215
Test Pile HP12X63			Each	1

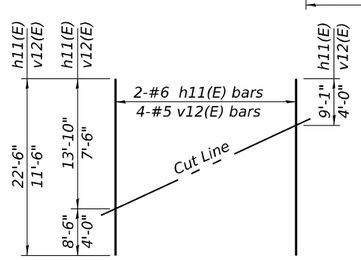

FIELD CUTTING DIAGRAM

Order h11(E) and v12(E) full length. Cut as shown and use remainder of bars in opposite face.

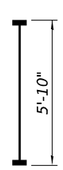

BAR v10(E)

(Headed)
(216-#8 Bar terminators)

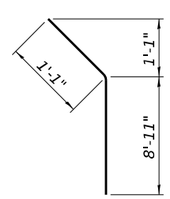

BAR h12(E)

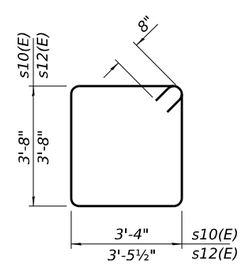

BAR s10(E) & s12(E)

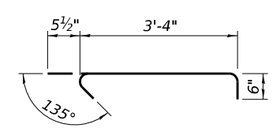

BAR s11(E)

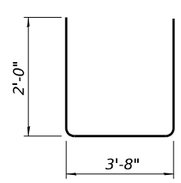

BAR s13(E)

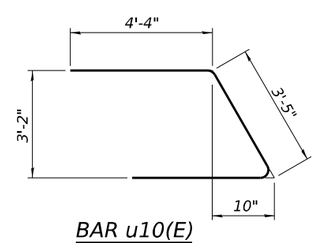

BAR u10(E)

Notes:
Pour steps monolithically with cap.
For details of piles see sheet S-35.
Bar terminators, paid for separately. See Total Bill of Material.
Piles shall be placed in 24" diameter precored holes extending to elevation 605.60 according to Article 512.09(c) of the Specifications except that the void space outside the pile shall be filled with bentonite according to the manufacturer's recommendations to achieve a Qu of 1.5 tsf.
Cost included in Driving Piles.

MODEL: Default
FILE NAME: P:\Projects\22000\22351C_DESIGN01_Discipline\a_Civil\Working\Sheets\Bridge\D5_70D66_Abut-1.dgn
7/22/2025 3:05:19 PM

EPSTEIN

USER NAME = asharghi	DESIGNED - AS	REVISED -	
	CHECKED - TCG	REVISED -	
PLOT SCALE = 0.167 ' / in.	DRAWN - AS	REVISED -	
PLOT DATE = 7/22/2025	CHECKED - TCG	REVISED -	

STATE OF ILLINOIS
DEPARTMENT OF TRANSPORTATION

WEST ABUTMENT
STRUCTURE NO. 092-0210

SHEET S-29 OF S-40 SHEETS

F.A. RTE.	SECTION	COUNTY	TOTAL SHEETS	SHEET NO.
74	(92-9)BR	VERMILION	87	62
		CONTRACT NO. 70D66		
	ILLINOIS	FED. AID PROJECT		

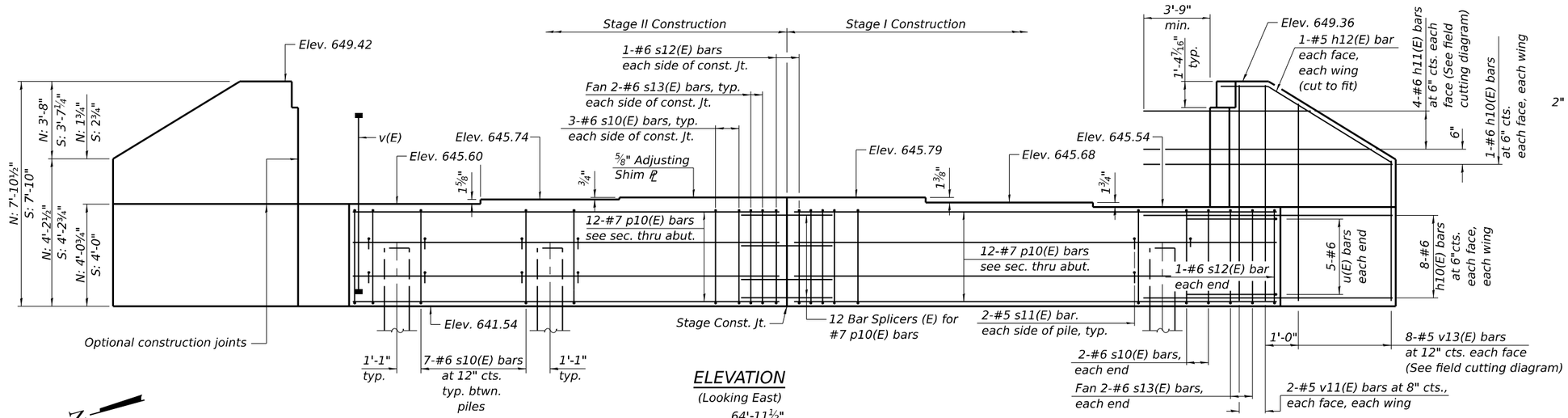

ELEVATION

(Looking East)

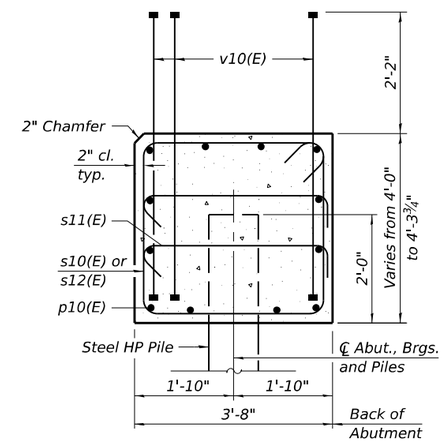

SEC. THRU ABUT.

Dimensions at right angles to abutment.

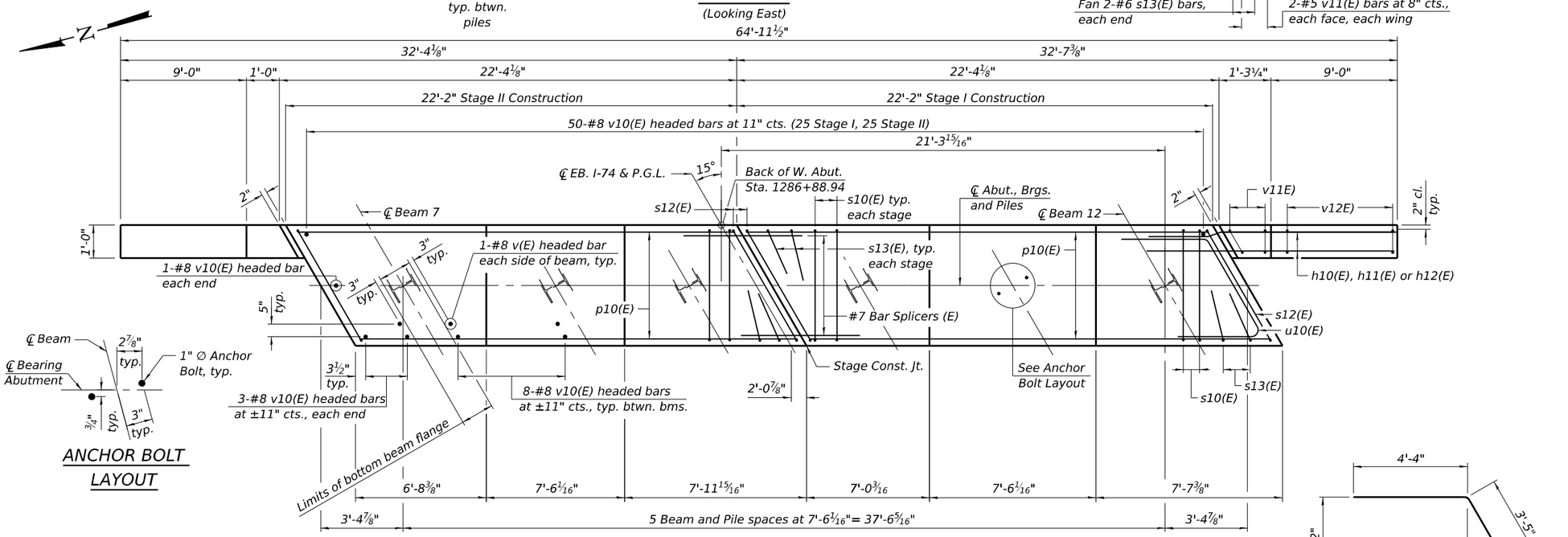

PLAN

ANCHOR BOLT LAYOUT

PILE DATA

Type: HP 12X63
Nominal Required Bearing: 497 kips
Factored Resistance Available: 273 kips
Est. Length: 38'-0"
No. Production Piles: 6

BILL OF MATERIAL

Bar	No.	Size	Length	Shape
h10(E)	36	#6	14'-6"	
h11(E)	8	#6	22'-4"	
h12(E)	4	#5	10'-0"	
p10(E)	24	#7	21'-10"	
s10(E)	36	#6	15'-4"	
s11(E)	24	#5	4'-4"	
s12(E)	4	#6	15'-7"	
s13(E)	8	#6	7'-8"	
u10(E)	10	#6	12'-1"	
v10(E)	108	#8	5'-10"	
v11(E)	8	#5	7'-6"	
v13(E)	16	#5	11'-4"	
Structure Excavation			Cu. Yd.	130
Concrete Structures			Cu. Yd.	29.8
Reinforcement Bars, Epoxy Coated			Pound	5,410
Furnishing Steel Piles HP 12X63			Foot	228
Driving Piles			Foot	228

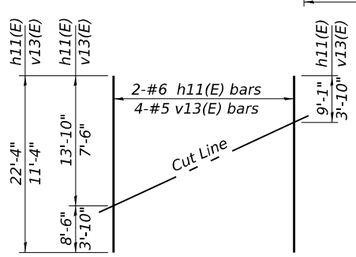

FIELD CUTTING DIAGRAM

Order h11(E) and v13(E) full length. Cut as shown and use remainder of bars in opposite face.

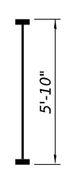

BAR v10(E)

(Headed)
(216-#8 Bar terminators)

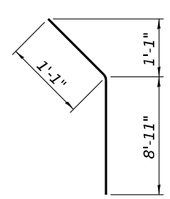

BAR h12(E)

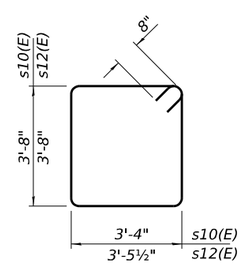

BAR s10(E) & s12(E)

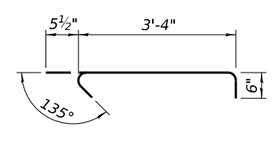

BAR s11(E)

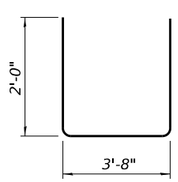

BAR s13(E)

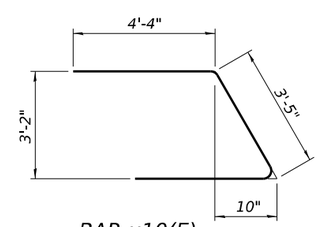

BAR u10(E)

Notes:
Pour steps monolithically with cap.
For details of piles see sheet S-35.
Bar terminators, paid for separately. See Total Bill of Material.
Piles shall be placed in 24" diameter precored holes extending to elevation 609.30 according to Article 512.09(c) of the Specifications except that the void space outside the pile shall be filled with bentonite according to the manufacturer's recommendations to achieve a Qu of 1.5 tsf.
Cost included in Driving Piles.

MODEL: Default
FILE NAME: P:\Projects\22000\22351\C_DESIGN\01_Discipline\a_Civil\Working\Sheets\Bridge\D5_70D66_Abut-2.dgn
7/22/2025 3:05:20 PM

EPSTEIN

USER NAME = asharghi	DESIGNED - AS	REVISED -	
	CHECKED - TCG	REVISED -	
PLOT SCALE = 0.167 ' / in.	DRAWN - AS	REVISED -	
PLOT DATE = 7/22/2025	CHECKED - TCG	REVISED -	

STATE OF ILLINOIS
DEPARTMENT OF TRANSPORTATION

EAST ABUTMENT
STRUCTURE NO. 092-0210

SHEET S-30 OF S-40 SHEETS

F.A. RTE.	SECTION	COUNTY	TOTAL SHEETS	SHEET NO.
74	(92-9)BR	VERMILION	87	63
		CONTRACT NO. 70D66		
	ILLINOIS	FED. AID PROJECT		

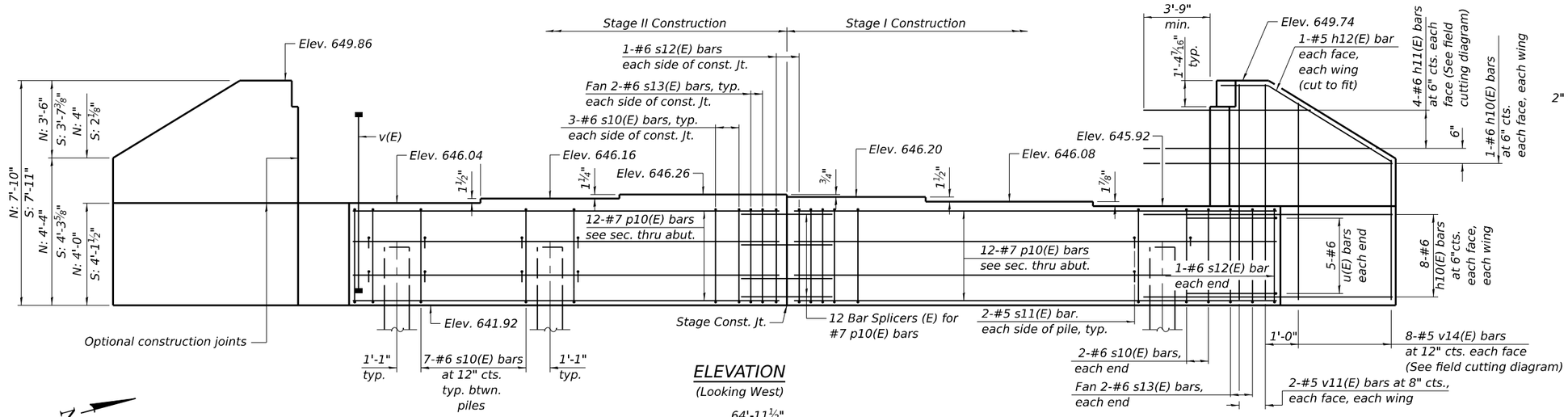

ELEVATION

(Looking West)

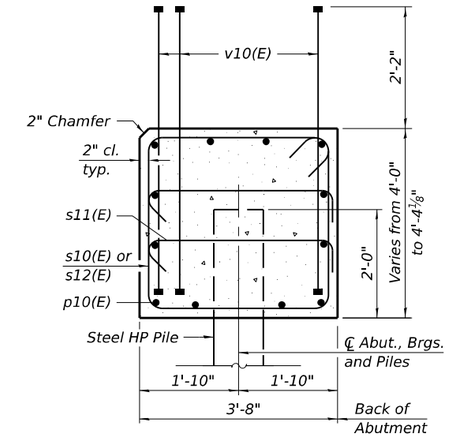

SEC. THRU ABUT.

Dimensions at right angles to abutment.

PILE DATA

Type: HP 12X63
Nominal Required Bearing: 497 kips
Factored Resistance Available: 273 kips
Est. Length: 45'-1"
No. Production Piles: 6

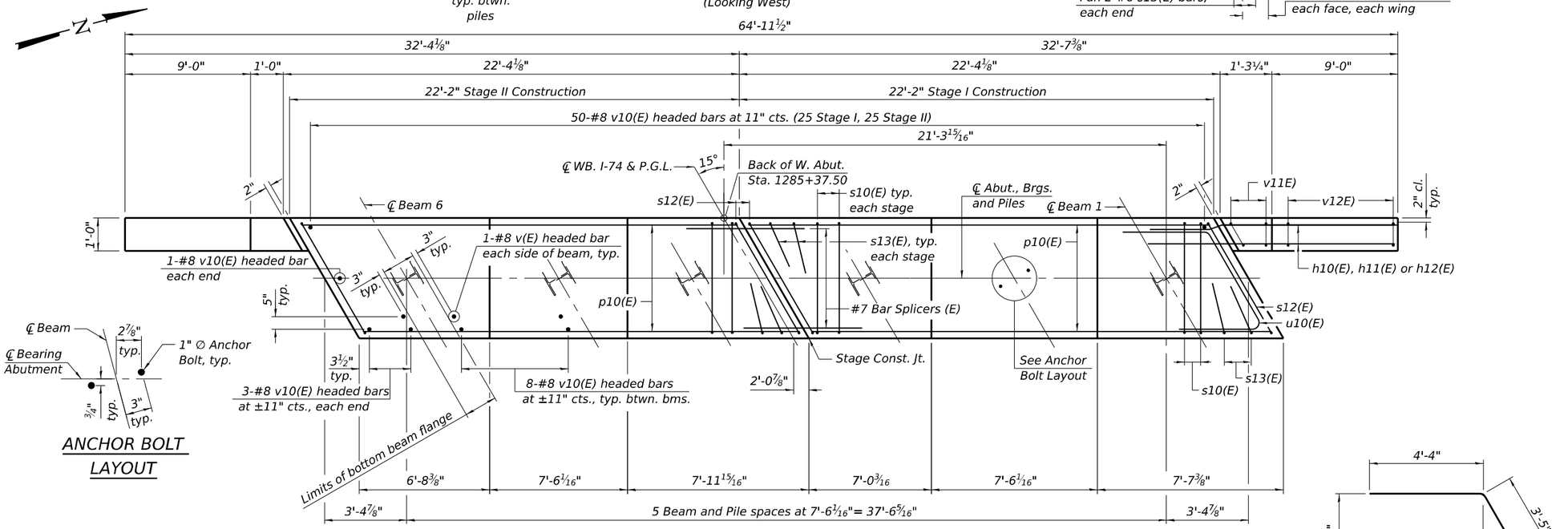

PLAN

ANCHOR BOLT LAYOUT

BILL OF MATERIAL

Bar	No.	Size	Length	Shape
h10(E)	36	#6	14'-6"	
h11(E)	8	#6	22'-4"	
h12(E)	4	#5	10'-0"	
p10(E)	24	#7	21'-10"	
s10(E)	36	#6	15'-4"	
s11(E)	24	#5	4'-4"	
s12(E)	4	#6	15'-7"	
s13(E)	8	#6	7'-8"	
u10(E)	10	#6	12'-1"	
v10(E)	108	#8	5'-10"	
v11(E)	8	#5	7'-6"	
v14(E)	16	#5	11'-8"	
Structure Excavation			Cu. Yd.	130
Concrete Structures			Cu. Yd.	29.8
Reinforcement Bars, Epoxy Coated			Pound	5,410
Furnishing Steel Piles HP 12X63			Foot	271
Driving Piles			Foot	271

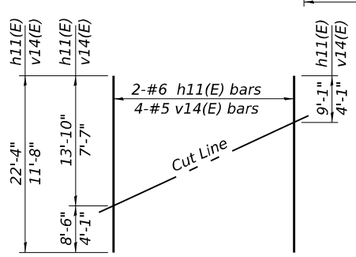

FIELD CUTTING DIAGRAM

Order h11(E) and v14(E) full length. Cut as shown and use remainder of bars in opposite face.

BAR v10(E)

(Headed)
(216-#8 Bar terminators)

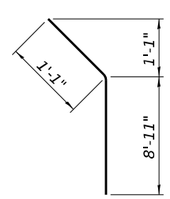

BAR h12(E)

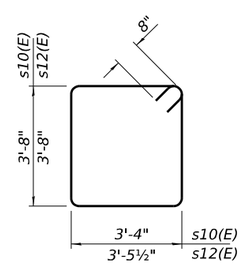

BAR s10(E) & s12(E)

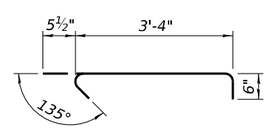

BAR s11(E)

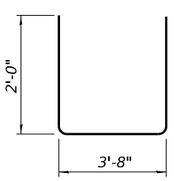

BAR s13(E)

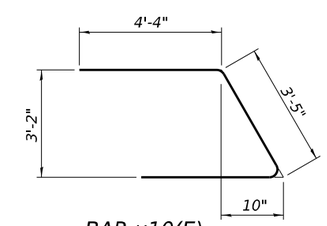

BAR u10(E)

Notes:
Pour steps monolithically with cap.
For details of piles see sheet S-35.
Bar terminators, paid for separately. See Total Bill of Material.
Piles shall be placed in 24" diameter precored holes extending to elevation 605.60 according to Article 512.09(c) of the Specifications except that the void space outside the pile shall be filled with bentonite according to the manufacturer's recommendations to achieve a Qu of 1.5 tsf.
Cost included in Driving Piles.

MODEL: Default
FILE NAME: P:\Projects\22000\22351C_DESIGN\01_Discipline\a_Civil\Working\Sheets\Bridge\D5_70D66_Abut-3.dgn
7/22/2025 3:05:21 PM

EPSTEIN

USER NAME = asharghi	DESIGNED - AS	REVISED -	
	CHECKED - TCG	REVISED -	
PLOT SCALE = 0.167 ' / in.	DRAWN - AS	REVISED -	
PLOT DATE = 7/22/2025	CHECKED - TCG	REVISED -	

STATE OF ILLINOIS
DEPARTMENT OF TRANSPORTATION

WEST ABUTMENT
STRUCTURE NO. 092-0211

SHEET S-31 OF S-40 SHEETS

F.A. RTE.	SECTION	COUNTY	TOTAL SHEETS	SHEET NO.
74	(92-9)BR	VERMILION	87	64
		CONTRACT NO. 70D66		
	ILLINOIS	FED. AID PROJECT		

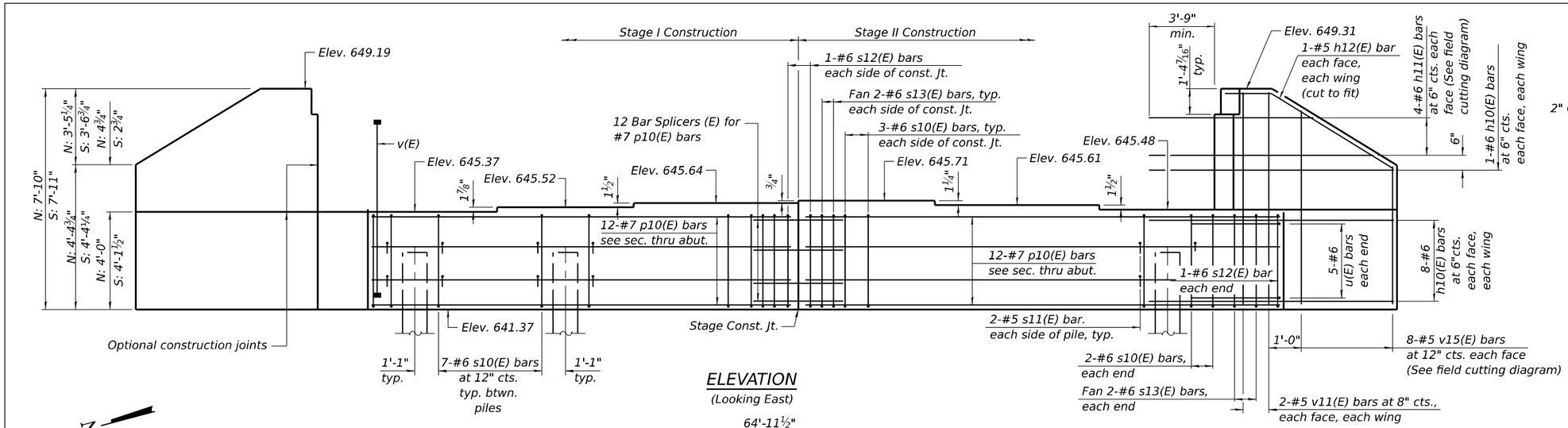

ELEVATION

(Looking East)

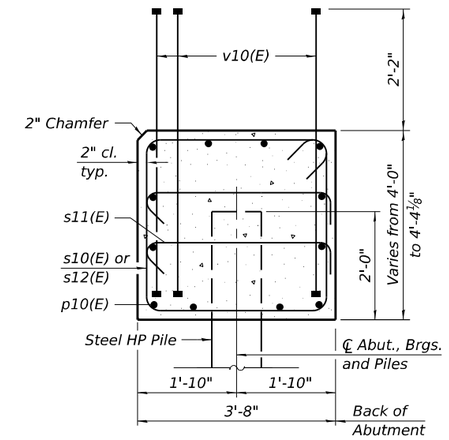

SEC. THRU ABUT.

Dimensions at right angles to abutment.

PILE DATA

Type: HP 12X63
Nominal Required Bearing: 497 kips
Factored Resistance Available: 273 kips
Est. Length: 38'-1"
No. Production Piles: 5
No. Test Piles: 1

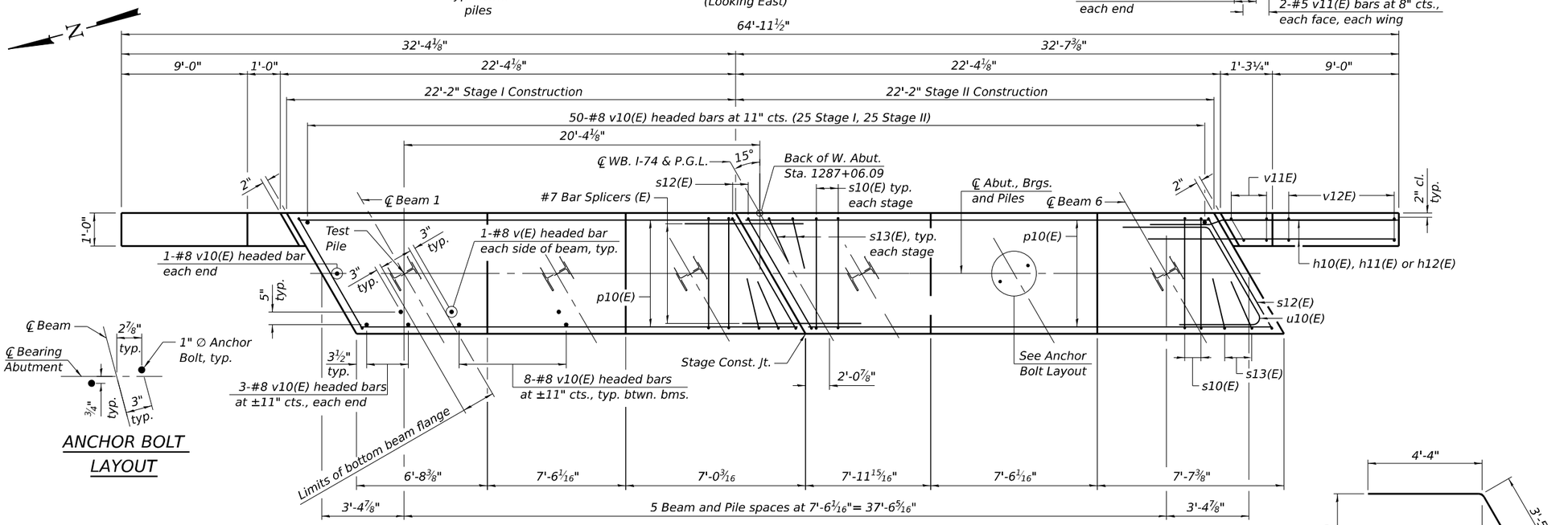

ANCHOR BOLT LAYOUT

PLAN

BILL OF MATERIAL

Bar	No.	Size	Length	Shape
h10(E)	36	#6	14'-6"	
h11(E)	8	#6	22'-4"	
h12(E)	4	#5	10'-0"	
p10(E)	12	#7	21'-10"	
s10(E)	36	#6	15'-4"	
s11(E)	24	#5	4'-4"	
s12(E)	4	#6	15'-7"	
s13(E)	8	#6	7'-8"	
u10(E)	10	#6	12'-1"	
v10(E)	108	#8	5'-10"	
v11(E)	8	#5	7'-6"	
v15(E)	16	#5	11'-7"	
Structure Excavation			Cu. Yd.	130
Concrete Structures			Cu. Yd.	29.9
Reinforcement Bars, Epoxy Coated			Pound	5,410
Furnishing Steel Piles HP 12X63			Foot	190
Driving Piles			Foot	190
Test Pile HP12X63			Each	1

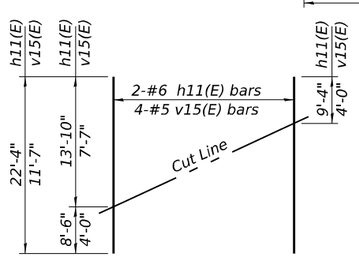

FIELD CUTTING DIAGRAM

Order h11(E) and v15(E) full length. Cut as shown and use remainder of bars in opposite face.

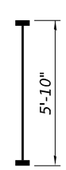

BAR v10(E)

(Headed)
(216-#8 Bar terminators)

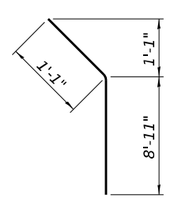

BAR h12(E)

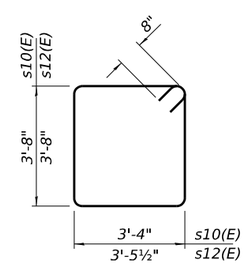

BAR s10(E) & s12(E)

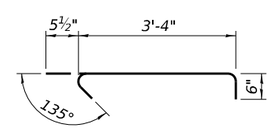

BAR s11(E)

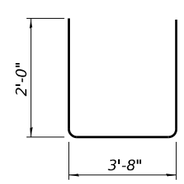

BAR s13(E)

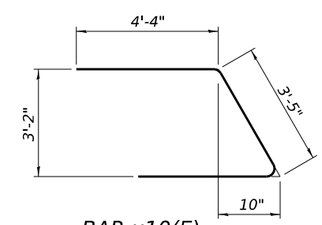

BAR u10(E)

Notes:
Pour steps monolithically with cap.
For details of piles see sheet S-35.
Bar terminators, paid for separately. See Total Bill of Material.
Piles shall be placed in 24" diameter precored holes extending to elevation 609.30 according to Article 512.09(c) of the Specifications except that the void space outside the pile shall be filled with bentonite according to the manufacturer's recommendations to achieve a Qu of 1.5 tsf.
Cost included in Drilling and Setting Piles (In Soil).

MODEL: Default
FILE NAME: P:\Projects\22000\22351C_DESIGN\01_Discipline\a_Civil\Working\Sheets\Bridge\D5_70D66_Abut-4.dgn
7/22/2025 3:05:22 PM

EPSTEIN

USER NAME = asharghi	DESIGNED - AS	REVISED -	
	CHECKED - TCG	REVISED -	
PLOT SCALE = 0.167 ' / in.	DRAWN - AS	REVISED -	
PLOT DATE = 7/22/2025	CHECKED - TCG	REVISED -	

STATE OF ILLINOIS
DEPARTMENT OF TRANSPORTATION

EAST ABUTMENT
STRUCTURE NO. 092-0211

SHEET S-32 OF S-40 SHEETS

F.A. RTE.	SECTION	COUNTY	TOTAL SHEETS	SHEET NO.
74	(92-9)BR	VERMILION	87	65
		CONTRACT NO. 70D66		
	ILLINOIS	FED. AID PROJECT		

Notes:
Space reinforcement in cap to miss anchor bolts.
Pour steps monolithically with cap.
For pile details see sheet S-35.
For cofferdam details see sheet S-5 .
Hook s(E) bar around h(E) & v(E) bars.

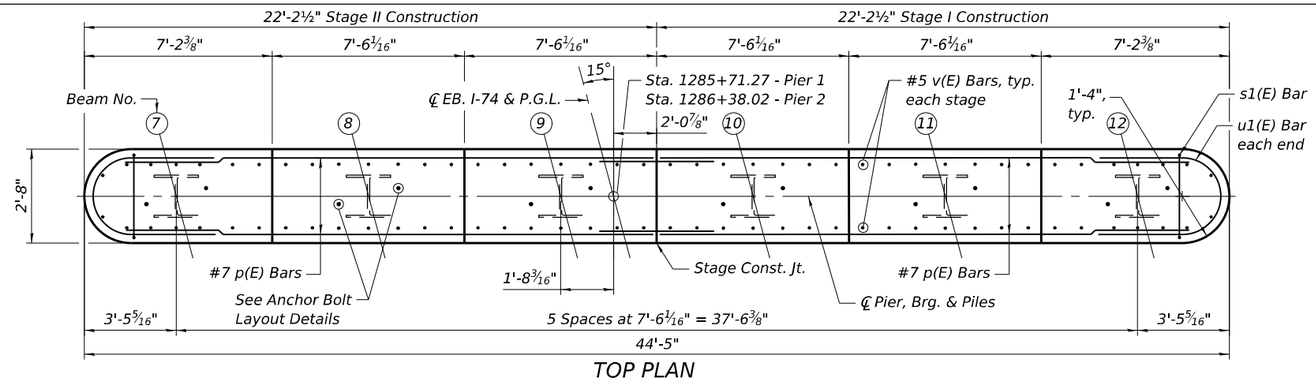

TOP PLAN

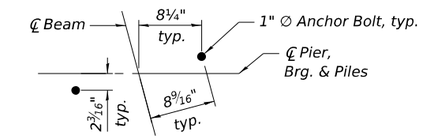

ANCHOR BOLT LAYOUT

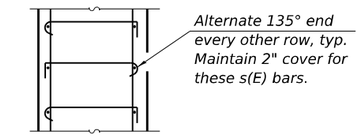

SECTION B-B

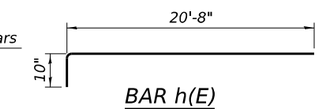

BAR h(E)

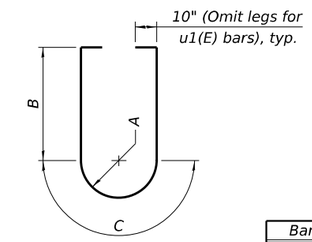

BAR u(E) or u1(E)

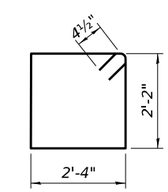

BAR s1(E)

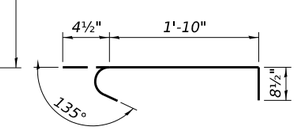

BAR s(E)

TABLE OF ELEVATIONS

	Pier 1	Pier 2
Elev. "A"	645.75	645.62
Elev. "B"	645.89	645.75
Elev. "C"	645.95	645.81
Elev. "D"	645.95	645.81
Elev. "E"	645.84	645.70
Elev. "F"	645.69	645.55
Elev. "G"	643.19	643.05
Elev. "H"	634.95	636.87

A, B & C DIMENSIONS

Bar	A	B	C
u(E)	11"	1'-7"	2'-11"
u1(E)	1'-2"	2'-6"	3'-8"

TWO PIERS BILL OF MATERIAL

Bar	No.	Size	Length	Shape
h(E)	128	#5	21'-6"	
p(E)	48	#7	20'-9"	
s(E)	384	#4	2'-11"	
s1(E)	68	#4	9'-9"	
u(E)	64	#5	7'-9"	
u1(E)	16	#6	8'-8"	
v(E)	168	#5	17'-0"	

Cofferdam Excavation	Cu. Yd.	415
Cofferdam (Type 1) (Location-1)	Each	1
Cofferdam (Type 1) (Location-3)	Each	1
Concrete Structures	Cu. Yd.	133.1
Reinforcement Bars, Epoxy Coated	Pound	9,810
Furnishing Steel Piles HP 14X73	Foot	427
Drilling and Setting Piles (in Soil)	Cu. Ft.	490
Drilling and Setting Piles (in Rock)	Cu. Ft.	227

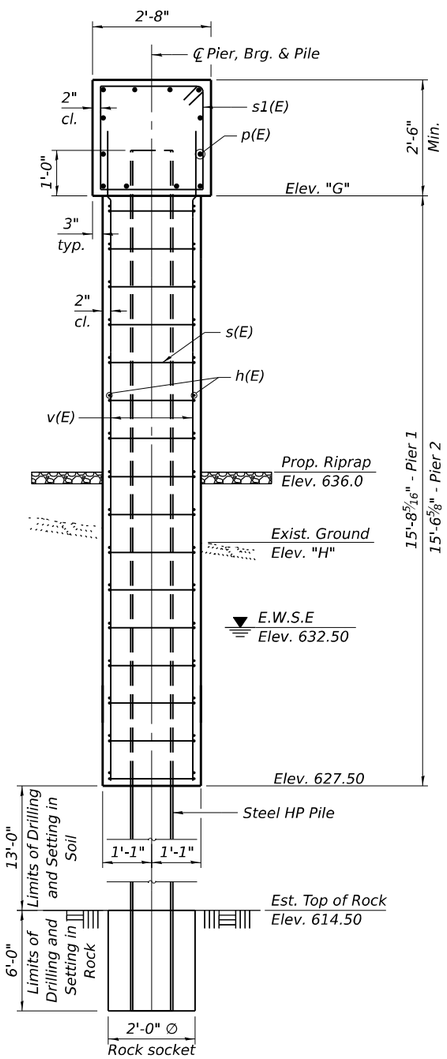

END VIEW

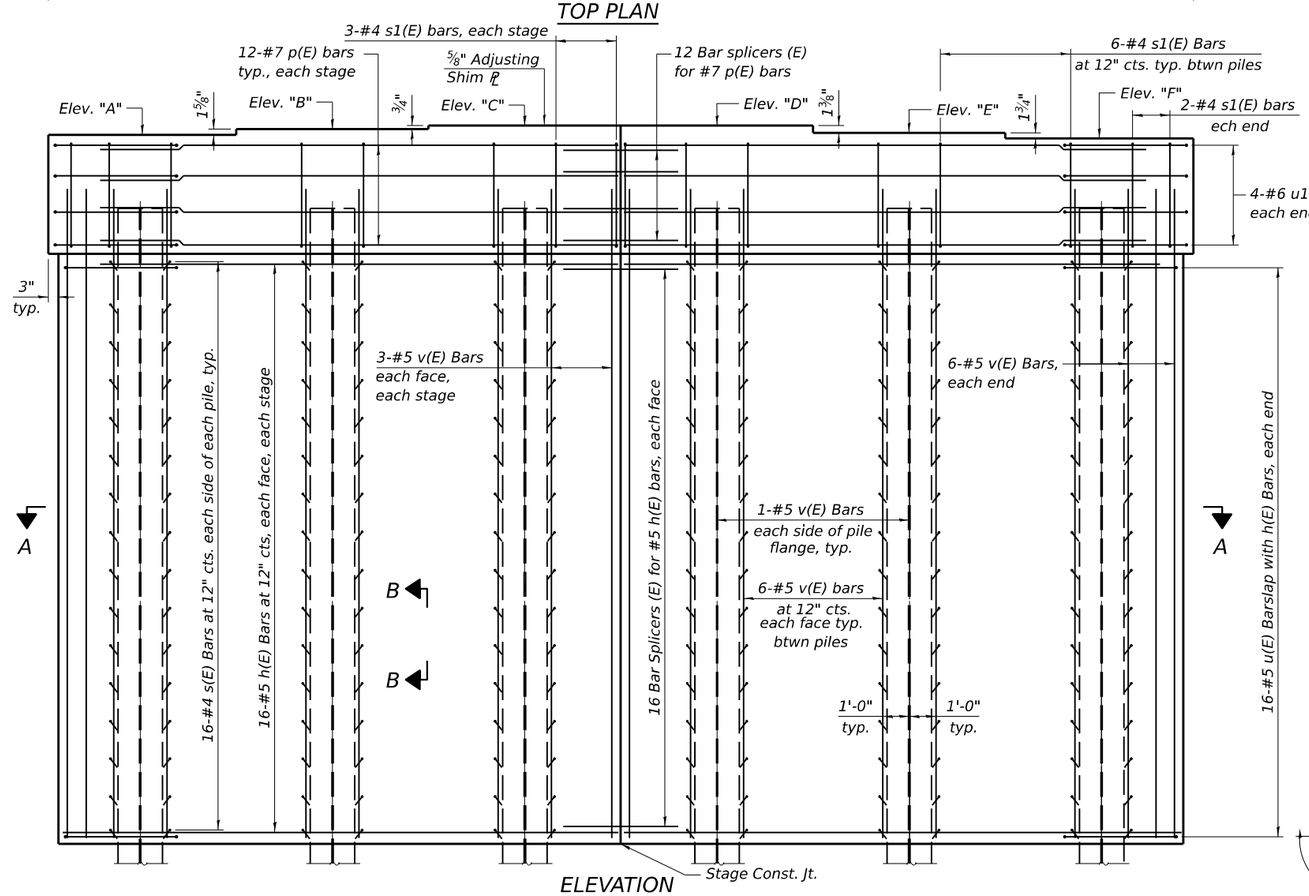

ELEVATION
(Looking East)

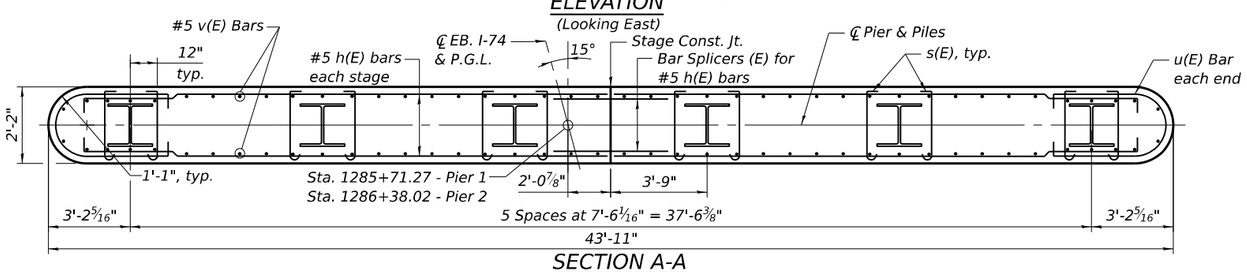

SECTION A-A

PILE DATA - PIER 1

Type: HP14X73
Nominal Required Bearing: Set in Rock
Factored Resistance Available: 420 kips
Est. Length: 35'-8"
No. Production Piles: 6

PILE DATA - PIER 2

Type: HP14X73
Nominal Required Bearing: Set in Rock
Factored Resistance Available: 420 kips
Est. Length: 35'-6"
No. Production Piles: 6

MODEL: Default
FILE NAME: P:\Projects\22000\22351C_DESIGN\01_Discipline\a_Civil\Working\Sheets\Bridge\D5_70D66_Pier-EB.dgn
7/22/2025 12:01:48 PM

EPSTEIN

USER NAME = asharghi	DESIGNED - AS	REVISED -	
	CHECKED - TCG	REVISED -	
PLOT SCALE = 0.167 ' / in.	DRAWN - AS	REVISED -	
PLOT DATE = 7/22/2025	CHECKED - TCG	REVISED -	

STATE OF ILLINOIS
DEPARTMENT OF TRANSPORTATION

PIER DETAILS
STRUCTURE NO. 092-0210

SHEET S-33 OF S-40 SHEETS

F.A. RTE.	SECTION	COUNTY	TOTAL SHEETS	SHEET NO.
74	(92-9)BR	VERMILION	87	66
		CONTRACT NO. 70D66		
	ILLINOIS	FED. AID PROJECT		

Notes:
Space reinforcement in cap to miss anchor bolts.
Pour steps monolithically with cap.
For pile details see sheet S-35.
For cofferdam details see sheet S-5 .
Hook s(E) bar around h(E) & v(E) bars.
Due to the varying difference in estimated rock elevations indicated on the soil borings, if competent rock is encountered before the bottom of concrete wall stem elevation, the rock socket may be raised with approval of the Engineer.

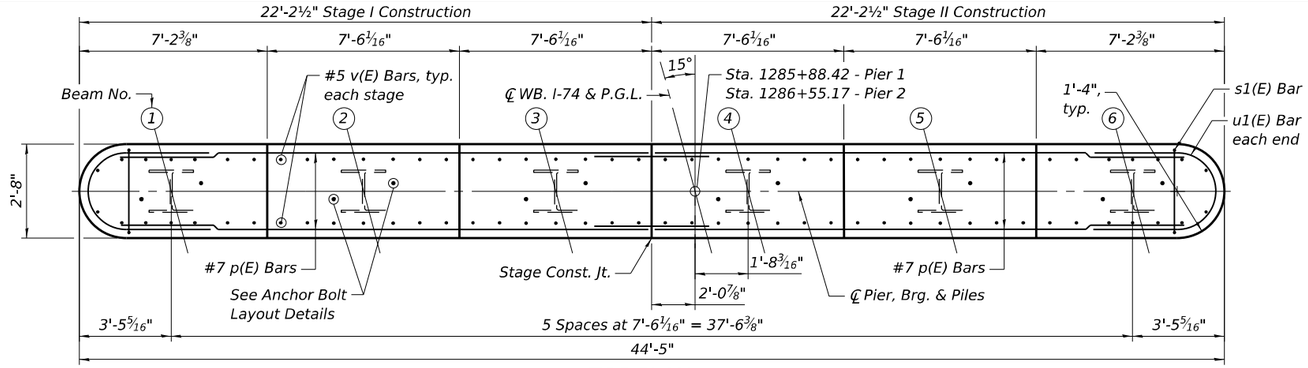

TOP PLAN

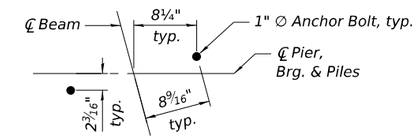

ANCHOR BOLT LAYOUT

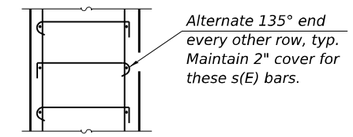

SECTION B-B

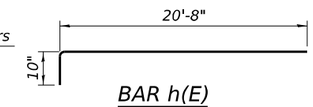

BAR h(E)

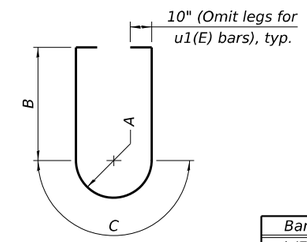

BAR u(E) or u1(E)

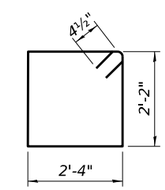

BAR s1(E)

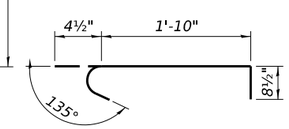

BAR s(E)

TABLE OF ELEVATIONS

	Pier 1	Pier 2
Elev. "A"	645.67	645.45
Elev. "B"	645.83	645.60
Elev. "C"	645.95	645.72
Elev. "D"	646.01	645.79
Elev. "E"	645.91	645.69
Elev. "F"	645.79	645.56
Elev. "G"	643.17	642.95
Elev. "H"	635.04	635.83

A, B & C DIMENSIONS

Bar	A	B	C
u(E)	11"	1'-7"	2'-11"
u1(E)	1'-2"	2'-6"	3'-8"

TWO PIERS BILL OF MATERIAL

Bar	No.	Size	Length	Shape
h(E)	128	#5	21'-6"	
p(E)	48	#7	20'-9"	
s(E)	384	#4	2'-11"	
s1(E)	68	#4	9'-9"	
u(E)	64	#5	7'-9"	
u1(E)	16	#6	8'-8"	
v(E)	168	#5	17'-0"	
Cofferdam Excavation			Cu. Yd.	250
Rock Excavation for Structure			Cu. Yd.	225
Cofferdam (Type 1) (Location-2)			Each	1
Cofferdam (Type 1) (Location-4)			Each	1
Concrete Structures			Cu. Yd.	133.0
Reinforcement Bars, Epoxy Coated			Pound	9,810
Furnishing Steel Piles HP 14X73			Foot	283
Drilling and Setting Piles (in Rock)			Cu. Ft.	320

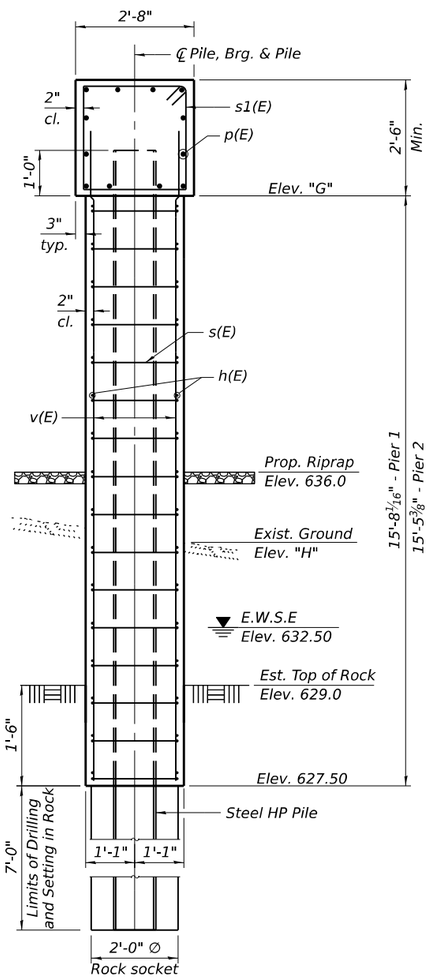

END VIEW

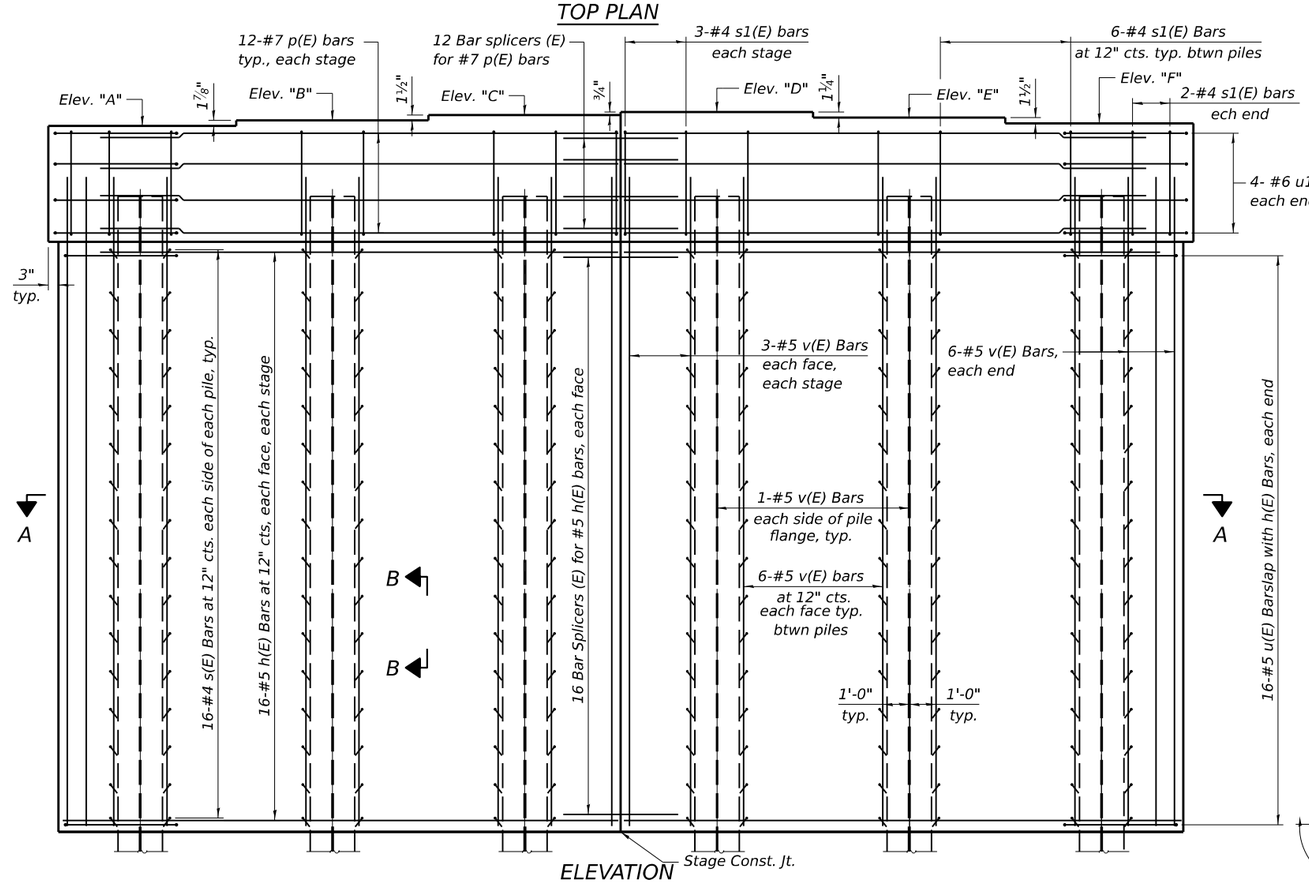

ELEVATION
(Looking East)

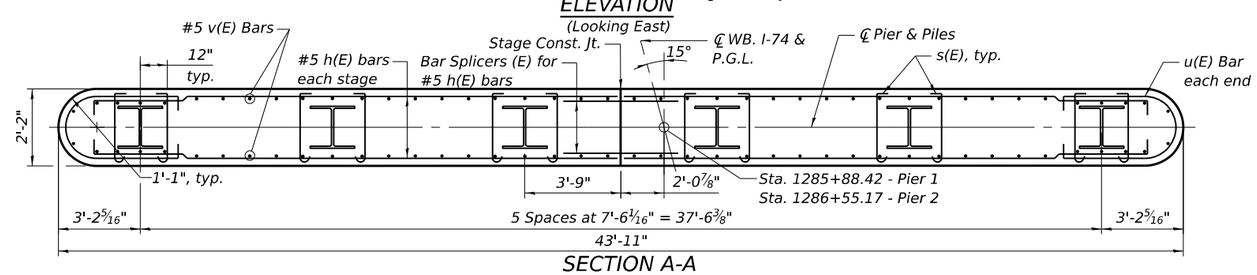

SECTION A-A

PILE DATA - PIER 1

Type: HP14X73
Nominal Required Bearing: Set in Rock
Factored Resistance Available: 407 kips
Est. Length: 23'-8"
No. Production Piles: 6

PILE DATA - PIER 2

Type: HP14X73
Nominal Required Bearing: Set in Rock
Factored Resistance Available: 407 kips
Est. Length: 23'-5"
No. Production Piles: 6

MODEL: Default
FILE NAME: P:\Projects\22000\22351C_DESIGN\01_Discipline\a_Civil\Working\Sheets\Bridge\D5_70D66_Pier-WB.dgn
7/22/2025 12:01:49 PM

EPSTEIN

USER NAME = asharghi	DESIGNED - AS	REVISED -	
	CHECKED - TCG	REVISED -	
PLOT SCALE = 0.167 ' / in.	DRAWN - AS	REVISED -	
PLOT DATE = 7/22/2025	CHECKED - TCG	REVISED -	

STATE OF ILLINOIS
DEPARTMENT OF TRANSPORTATION

PIER DETAILS
STRUCTURE NO. 092-0211

SHEET S-34 OF S-40 SHEETS

F.A. RTE.	SECTION	COUNTY	TOTAL SHEETS	SHEET NO.
74	(92-9)BR	VERMILION	87	67
		CONTRACT NO. 70D66		
	ILLINOIS	FED. AID PROJECT		

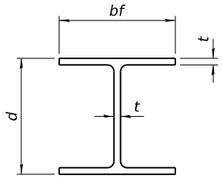

STEEL PILE TABLE

Designation	Depth d	Flange width bf	Web and Flange thickness t	Encasement diameter A
HP 18x181	18	18	1	36"
x157	17¾"	17⅞"	⅞"	36"
x135	17½"	17¾"	¾"	36"
HP 16x183	16½"	16½"	1⅛"	36"
x162	16¼"	16⅛"	1"	36"
x141	16	16	⅞"	36"
x121	15¾"	15⅞"	¾"	36"
HP 14x117	14¼"	14⅞"	13/16"	30"
x102	14"	14¾"	11/16"	30"
x89	13⅞"	14¾"	⅝"	30"
x73	13⅝"	14⅝"	½"	30"
HP 12x84	12¼"	12¼"	11/16"	24"
x74	12⅛"	12¼"	⅝"	24"
x63	12"	12⅛"	½"	24"
x53	11¾"	12"	7/16"	24"
HP 10x57	10"	10¼"	9/16"	24"
x42	9¾"	10⅛"	7/16"	24"
HP 8x36	8"	8⅛"	7/16"	18"

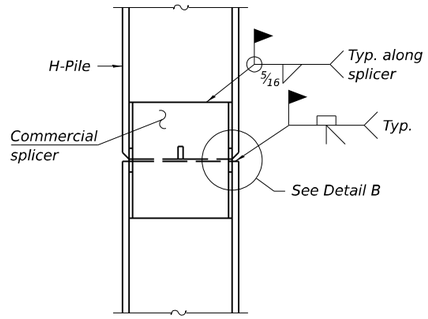

ELEVATION

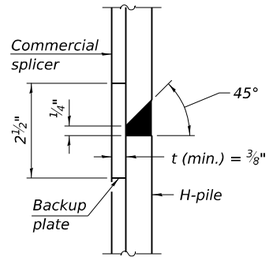

DETAIL B

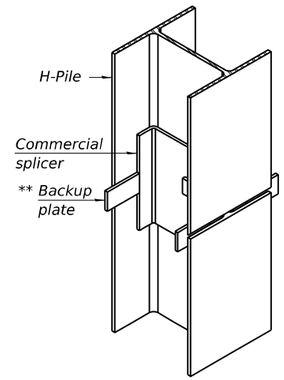

ISOMETRIC VIEW

WELDED COMMERCIAL SPLICE

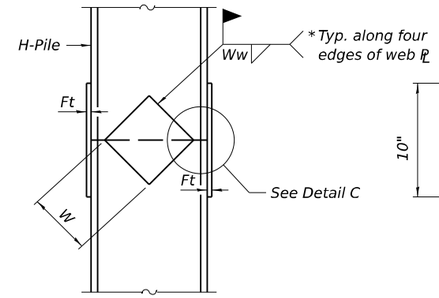

ELEVATION

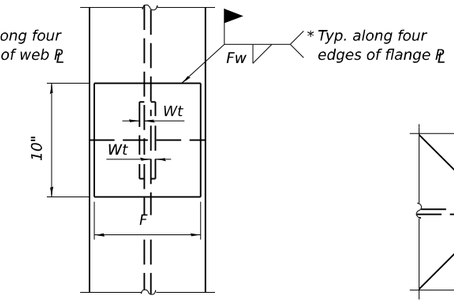

END VIEW

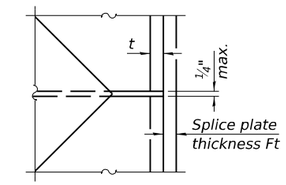

DETAIL C

Designation	F	Ft	Fw	W	Wt	Ww
HP 18x181	15½"	1½"	1"	9½"	⅞"	¾"
x157	15¼"	1¼"	1"	9½"	⅞"	¾"
x135	15¼"	1¼"	1"	9½"	⅞"	¾"
HP 16x183	13¾"	1½"	1"	8¼"	⅞"	¾"
x162	13½"	1½"	1"	8¼"	¾"	⅝"
x141	13½"	1¼"	⅞"	8¼"	¾"	⅝"
x121	13½"	1¼"	⅞"	8¼"	¾"	⅝"
HP 14x117	12½"	1¼"	⅞"	7¾"	⅝"	½"
x102	12½"	1"	¾"	7¾"	⅝"	½"
x89	12½"	⅞"	11/16"	7¾"	⅝"	½"
x73	12½"	¾"	9/16"	7¾"	⅝"	½"
HP 12x84	10"	1"	11/16"	6½"	⅝"	½"
x74	10"	⅞"	11/16"	6½"	⅝"	½"
x63	10"	¾"	½"	6½"	½"	⅜"
x53	10"	¾"	½"	6½"	½"	⅜"
HP 10x57	8"	⅞"	9/16"	5¼"	½"	⅜"
x42	8"	¾"	9/16"	5¼"	½"	⅜"
HP 8x36	6¾"	⅝"	7/16"	4"	½"	⅜"

WELDED PLATE FIELD SPLICE

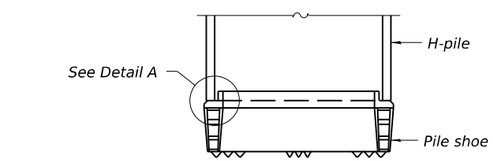

ELEVATION

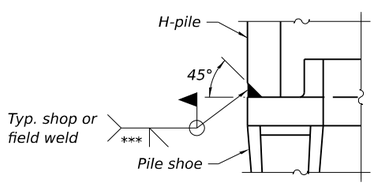

DETAIL A

SHOE ATTACHMENT

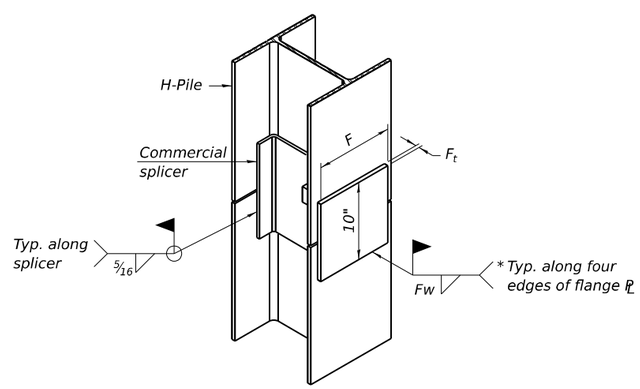

ISOMETRIC VIEW

WELDED COMMERCIAL SPLICE ALTERNATE

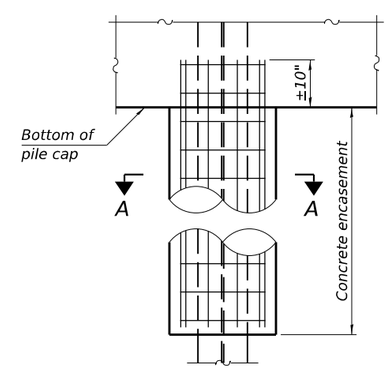

ELEVATION

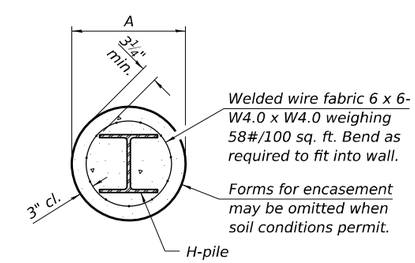

SECTION A-A

INDIVIDUAL PILE CONCRETE ENCASEMENT
(when specified)

Note:
The steel H-piles shall be according to AASHTO M270 Grade 50.

* Interrupt welds ¼" from end of web and/or each flange.

** Remove portions of backup plates that extend outside the flanges.

*** Weld size per pile shoe manufacturer (5/16" min.).

F-HP 10-27-2023

MODEL: Default
FILE NAME: P:\Projects\22000\22331\C_DESIGN\01_Discipline\a_Civil\Working\Sheets\Bridge\D5_70D66_SHL_Pile.dgn

EPSTEIN

USER NAME = asharghi	DESIGNED - AS	REVISED -	
	CHECKED - TCG	REVISED -	
PLOT SCALE = 0.167 ' / in.	DRAWN - AS	REVISED -	
PLOT DATE = 6/23/2025	CHECKED - TCG	REVISED -	

STATE OF ILLINOIS
DEPARTMENT OF TRANSPORTATION

HP PILE DETAILS
STRUCTURE NO. 092-0210 (E.B.) & 092-0211 (W.B.)
SHEET S-35 OF S-40 SHEETS

F.A. RTE.	SECTION	COUNTY	TOTAL SHEETS	SHEET NO.
74	(92-9)BR	VERMILION	87	68
		CONTRACT NO. 70D66		
	ILLINOIS	FED. AID PROJECT		

6/23/2025 10:29:10 AM

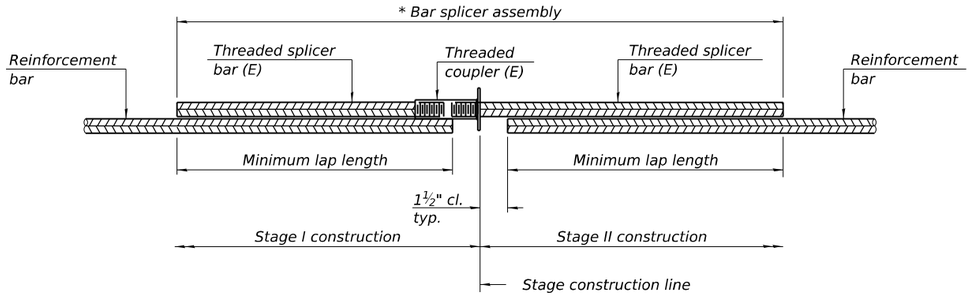

STANDARD BAR SPLICER ASSEMBLY PLAN

Only bar splicer assemblies as presented on the approved QPL list may be used.

Threaded splicer bar length = min. lap length + 1½" + thread length

* Epoxy not required on Bar Splicer Assembly components used in conjunction with black bars.

Location	Bar size	No. assemblies required	Minimum lap length
Top of Deck	#5	730	2'-0"
Bottom of Deck	#5	446	3'-10"
Abut. Diaphragm	#6	28	3'-1"
Top of Approach Slab	#5	188	2'-0"
Bottom of Approach Slab	#8	248	5'-2"
Top of Approach Slab Footing	#5	80	2'-0"
Bottom of Approach Slab Footing	#5	80	2'-0"
Abutment	#7	48	4'-4"
Pier Cap	#7	48	4'-4"
Pier Wall	#5	128	2'-1"

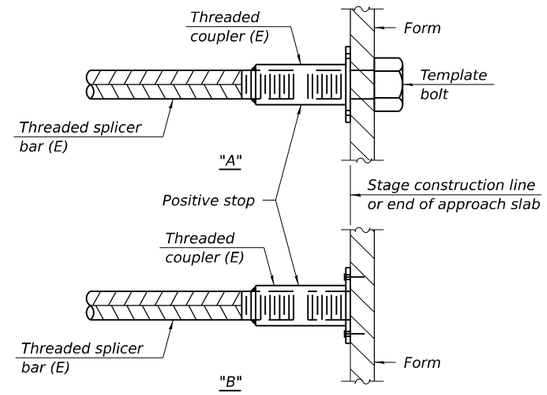

INSTALLATION AND SETTING METHODS

"A" : Set bar splicer assembly by means of a template bolt.
"B" : Set bar splicer assembly by nailing to wood forms or cementing to steel forms.
(E) : Indicates epoxy coating.

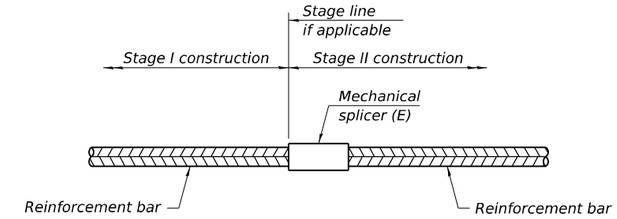

STANDARD MECHANICAL SPLICER

Location	Bar size	No. assemblies required

Notes:
Splicer bars shall be deformed with threaded ends and have a minimum 60 ksi yield strength.
All reinforcement shall be lapped and tied to the splicer bars.
Bar splicer assemblies shall be epoxy coated according to the requirements for reinforcement bars. See Section 508 of the Standard Specifications.
See approved list of bar splicer assemblies and mechanical splicers for alternatives.

BSD-1 5-15-2023

MODEL: Default
FILE NAME: P:\Projects\22000\22351\C_DESIGN\01_Discipline\a_Civil\WorkingSheets\Bridge\D5_70D66_Sht_BarSplice.dgn
6/23/2025 10:29:11 AM

EPSTEIN

USER NAME = asharghi	DESIGNED - AS	REVISED -	
	CHECKED - TCG	REVISED -	
PLOT SCALE = 0.167 ' / in.	DRAWN - AS	REVISED -	
PLOT DATE = 6/23/2025	CHECKED - TCG	REVISED -	

STATE OF ILLINOIS
DEPARTMENT OF TRANSPORTATION

BAR SPLICER ASSEMBLY AND MECHANICAL SPLICER DETAILS
STRUCTURE NO. 092-0210 (E.B.) & 092-0211 (W.B.)

SHEET S-36 OF S-40 SHEETS

F.A. RTE.	SECTION	COUNTY	TOTAL SHEETS	SHEET NO.
74	(92-9)BR	VERMILION	87	69
		CONTRACT NO. 70D66		
	ILLINOIS	FED. AID PROJECT		

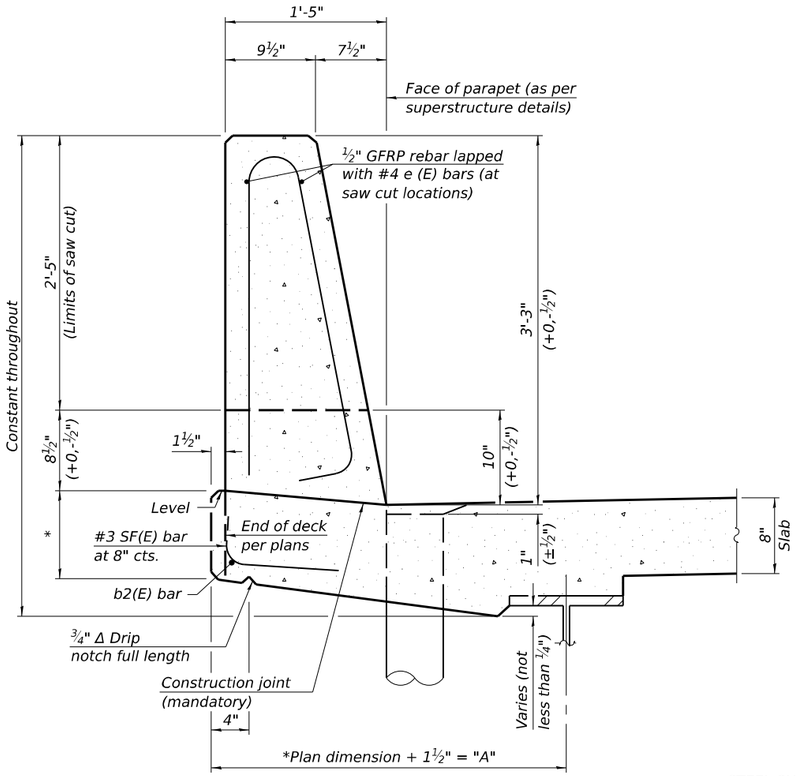

39" CONSTANT-SLOPE PARAPET SECTION

(Showing dimensions, d(E), and ½" Ø GFRP rebar)

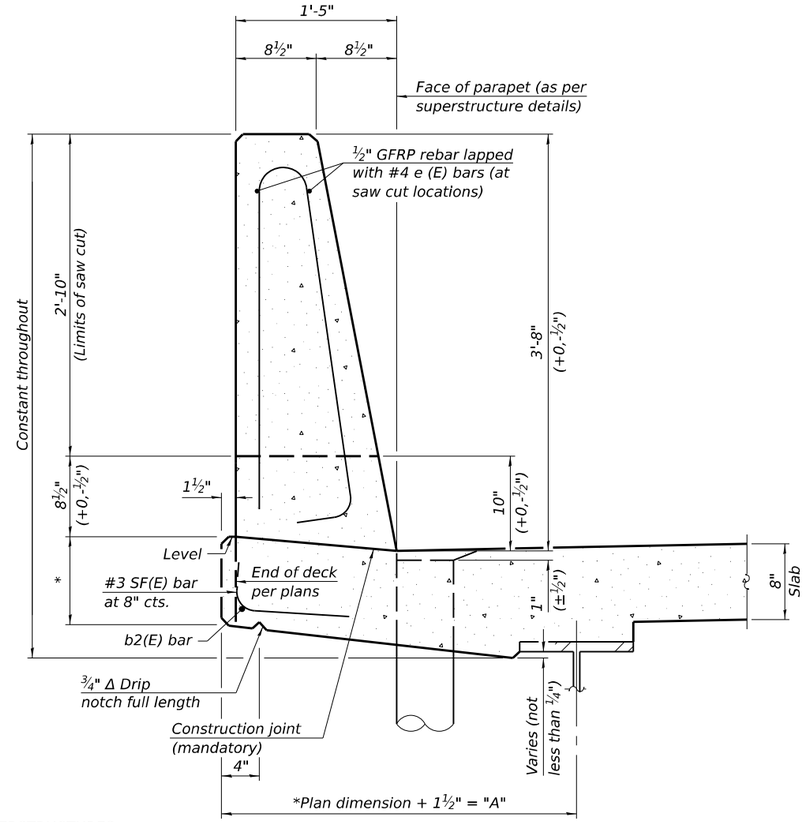

44" CONSTANT-SLOPE PARAPET SECTION

(Showing dimensions, d(E), and ½" Ø GFRP rebar)

STEEL SUPERSTRUCTURES

*See Superstructure Details.

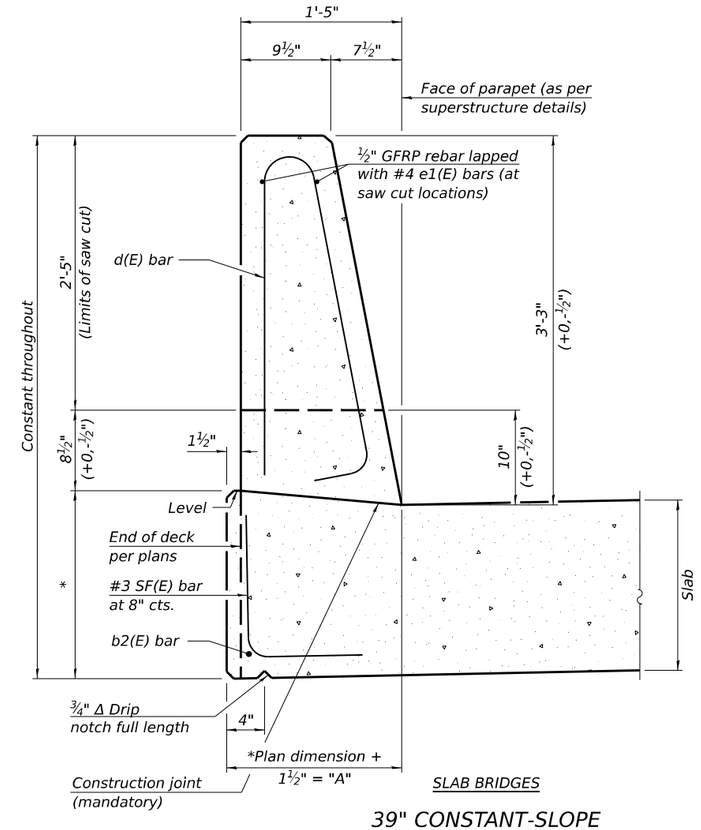

SLAB BRIDGES

39" CONSTANT-SLOPE PARAPET SECTION

(Showing dimensions, d(E), and ½" Ø GFRP rebar)

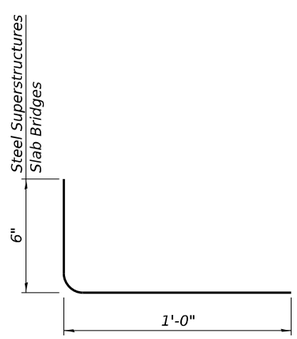

SF(E) BAR

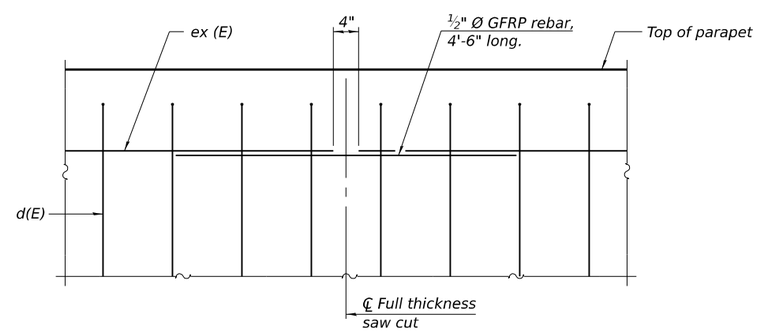

DETAIL - GFRP REBAR STIFFENING ELEVATION

(Place as shown in parapet section at each parapet joint location.)

Notes:
All dimensions shall remain the same as shown on superstructure details, except dimension "A" which is to be revised as shown.
Additional concrete needed to revise dimension "A" (39" and 44" parapets):
Steel Superstructures: 0.00348 cu. yds./ft.
Slab Bridge Superstructures: cu. yds./ft.
Place full depth aluminum sheets as shown on superstructure details.
Replace all cork joint filler locations with a full thickness saw cut.
Steel and slab superstructures shown. Other superstructure types similar.

SFP 39-44 10/27/2023

MODEL: Default
FILE NAME: P:\Projects\22000\22351\C_DESIGN\01_Discipline\a_Civil\WorkingSheets\Bridge\D5_70D66_Sht_Slipform.dgn

EPSTEIN

USER NAME = asharghi	DESIGNED - AS	REVISED -	
	CHECKED - TCG	REVISED -	
PLOT SCALE = 0.167 ' / in.	DRAWN - AS	REVISED -	
PLOT DATE = 6/23/2025	CHECKED - TCG	REVISED -	

STATE OF ILLINOIS
DEPARTMENT OF TRANSPORTATION

CONCRETE PARAPET SLIPFORMING OPTION
STRUCTURE NO. 092-0210 (E.B.) & 092-0211 (W.B.)

SHEET S-37 OF S-40 SHEETS

F.A. RTE.	SECTION	COUNTY	TOTAL SHEETS	SHEET NO.
74	(92-9)BR	VERMILION	87	70
		CONTRACT NO. 70D66		
		ILLINOIS	FED. AID PROJECT	

6/23/2025 10:29:11 AM

Illinois Department of Transportation
Division of Highways

SOIL BORING LOG

Date 8/21/23

ROUTE FAI 74 (I-74) DESCRIPTION I-74 over Stony Creek LOGGED BY KEG

SECTION (92-9)BR LOCATION Oakwood Township, IL - 40.12434939° N, 87.85757603° W

COUNTY Vermilion DRILLING METHOD HSA + Rotary Wash at 25' HAMMER TYPE AUTO

STRUCT. NO. 092-001/002 (EX)
Station 1286+17

BORING NO. SB-01
Station 1285+27.54
Offset 2.9 ft RT
Ground Surface Elev. 639.14 ft

Surface Water Elev. ft
Stream Bed Elev. ft

Groundwater Elev.:
First Encounter 619.1 ft ▼
Upon Completion ft
After Hrs. ft

Description	Elev.	DEPTH (ft)	BLOWS (/6")	UCS Qu (tsf)	MOIST (%)
SILTY CLAY - Brown, w/ Gravel, Very Stiff			8		
			20	4.0	10
			22	P	
Becomes Stiff			3		
			4	-	
		-5	6		
	633.1				
CLAY LOAM - Dark Brown, Stiff			3		
Sand = 33.8%, Silt = 45.2%, Clay = 21.0%			4	1.1	18
			7	B	
Becomes Dark Brown and Gray			3		
			4	1.5	15
		-10	5	B	
	628.1				
SILTY CLAY LOAM - Gray, Stiff, w/ Gravel			4		
			4	1.9	12
			6	B	
Becomes Medium Stiff			4		
			2	4.3	12
		-15	4	P	
	623.1				
SANDY LOAM - Gray, Loose			1		
Sand = 54.6%, Silt = 29.4%, Clay = 16.0%			2	0.5	19
			11	P	
Becomes Brown, Hard, w/ Gravel, Wet			24		
			30	2.4	10
		▼-20	33	S	
	618.1				
SILTY CLAY LOAM TILL - Dark Gray, Hard			19		
			16	7.7	17
			19	B	
			8		
			11	5.2	18
		-25	17	B	
LL = 40.1, PL = 14.8, PI = 25.4			5		
			9	3.7	21
			9	B	
			12		
	609.6		13	1.8	28
SANDY CLAY - Greenish Gray, Stiff		-30	16	S	
	605.6				
CLAYEY SHALE - Brown and Gray, Soft			18		
			32	1.3	17
		-35	27	S	
MSPT Start			100/15.5"		
	599.6			6.9	25
COAL		-40			

The Unconfined Compressive Strength (UCS) Failure Mode is indicated by (B-Bulge, S-Shear, P-Penetrometer)
The SPT (N value) is the sum of the last two blow values in each sampling zone (AASHTO T206)

BBS, form 137 (Rev. 8-99)

Illinois Department of Transportation
Division of Highways

SOIL BORING LOG

Date 8/21/23

ROUTE FAI 74 (I-74) DESCRIPTION I-74 over Stony Creek LOGGED BY KEG

SECTION (92-9)BR LOCATION Oakwood Township, IL - 40.12434939° N, 87.85757603° W

COUNTY Vermilion DRILLING METHOD HSA + Rotary Wash at 25' HAMMER TYPE AUTO

STRUCT. NO. 092-001/002 (EX)
Station 1286+17

BORING NO. SB-01
Station 1285+27.54
Offset 2.9 ft RT
Ground Surface Elev. 639.14 ft

Surface Water Elev. ft
Stream Bed Elev. ft

Groundwater Elev.:
First Encounter 619.1 ft ▼
Upon Completion ft
After Hrs. ft

Description	Elev.	DEPTH (ft)	BLOWS (/6")	UCS Qu (tsf)	MOIST (%)
COAL *(continued)*					
	595.6				
CLAYEY SHALE - Gray, Soft			60/18"		
				1.4	16
		-45			
			100/3.7"		
				45.5	15
		-50			
			100/15.2"		
				2.5	17
		-55			
Becomes Dark Red			100/8.8"		
				5.0	12
	579.1	-60			

End of Boring

The Unconfined Compressive Strength (UCS) Failure Mode is indicated by (B-Bulge, S-Shear, P-Penetrometer)
The SPT (N value) is the sum of the last two blow values in each sampling zone (AASHTO T206)

BBS, form 137 (Rev. 8-99)

MODEL: Default
FILE NAME: P:\Projects\22000\22351C_DESIGN\01_Discipline\a_Civil\WorkingSheets\Bridge\D5_70D66_Sht_Boring1.dgn

6/23/2025 10:29:12 AM

EPSTEIN

USER NAME = asharghi	DESIGNED - AS	REVISED -	
	CHECKED - TCG	REVISED -	
PLOT SCALE = 0.167 ' / in.	DRAWN - AS	REVISED -	
PLOT DATE = 6/23/2025	CHECKED - TCG	REVISED -	

STATE OF ILLINOIS
DEPARTMENT OF TRANSPORTATION

BORING LOGS 1
STRUCTURE NO. 092-0210 (E.B.) & 092-0211 (W.B.)

SHEET S-38 OF S-40 SHEETS

F.A. RTE.	SECTION	COUNTY	TOTAL SHEETS	SHEET NO.
74	(92-9)BR	VERMILION	87	71

CONTRACT NO. 70D66

ILLINOIS FED. AID PROJECT

Illinois Department of Transportation
Division of Highways

SOIL BORING LOG

Page 1 of 2

Date 8/22/23

ROUTE FAI 74 (I-74) DESCRIPTION I-74 over Stony Creek LOGGED BY KEG

SECTION (92-9)BR LOCATION Oakwood Township, IL - 40.12436139° N, 87.85695006° W

COUNTY Vermilion DRILLING METHOD HSA + Mud Rotary Wash at 20' HAMMER TYPE AUTO

STRUCT. NO. 092-001/002 (EX)
Station 1286+17

BORING NO. SB-02
Station 1287+02.64
Offset 1.1 ft RT
Ground Surface Elev. 642.79 ft

Surface Water Elev. ft
Stream Bed Elev. ft

Groundwater Elev.:
First Encounter 626.8 ft ▼
Upon Completion ft
After Hrs. ft

Description	Elev.	DEPTH (ft)	BLOWS (/6")	UCS Qu (tsf)	MOIST (%)
SILTY CLAY - Brown, Hard					
LL = 26.9, PL = 14.6, PI = 12.3			3		
			8	>4.5	13
			14	P	
			3		
	638.3		5	3.8	12
LOAM - Brown, Stiff, w/ Gravel		-5	6	P	
Becomes Medium Stiff			3		
			4	1.0	14
Sand = 43.7%, Silt = 43.3%, Clay = 13.0%			4	B	
			2		
			4	0.8	14
		-10	5	B	
w/ Clay Pockets			3		
			6	0.3	14
			8	B	
Becomes Very Stiff			4		
			9	2.4	12
		-15	10	B	
	626.8 ▼				
SANDY CLAY LOAM TILL - Brownish Gray, Hard, w/ Gravel, Wet			25		
			30	-	8
			36		
	623.8		21		
CLAYEY SAND - Brown, Fine, Dense			40	-	10
		-20	47		
CLAYEY SAND - Brown, Fine, Dense *(continued)*	621.8				
SANDY CLAY LOAM TILL - Gray, Very Stiff, w/ Gravel			8		
			2	4.6	17
Sand = 7.0%, Silt = 53.0%, Clay = 40.0%			11	B	
	619.3				
CLAYEY SHALE - Brownish Gray, Stiff			2		
			11	1.8	20
		-25	17	S	
	616.8				
SILTY CLAY - Dark Gray, Very Stiff			6		
			7	4.2	18
			9	B	
LL = 47.1, PL = 18.1, PI = 29.0			5		
			6	2.0	22
		-30	8	B	
	609.3				
SHALE - Gray, Brittle			40		
			50/5"	3.1	15
		-35	-	S	
MSPT Start			40/20"		
		-40		-	19

The Unconfined Compressive Strength (UCS) Failure Mode is indicated by (B-Bulge, S-Shear, P-Penetrometer)
The SPT (N value) is the sum of the last two blow values in each sampling zone (AASHTO T206)

BBS, form 137 (Rev. 8-99)

Illinois Department of Transportation
Division of Highways

SOIL BORING LOG

Page 2 of 2

Date 8/22/23

ROUTE FAI 74 (I-74) DESCRIPTION I-74 over Stony Creek LOGGED BY KEG

SECTION (92-9)BR LOCATION Oakwood Township, IL - 40.12436139° N, 87.85695006° W

COUNTY Vermilion DRILLING METHOD HSA + Mud Rotary Wash at 20' HAMMER TYPE AUTO

STRUCT. NO. 092-001/002 (EX)
Station 1286+17

BORING NO. SB-02
Station 1287+02.64
Offset 1.1 ft RT
Ground Surface Elev. 642.79 ft

Surface Water Elev. ft
Stream Bed Elev. ft

Groundwater Elev.:
First Encounter 626.8 ft ▼
Upon Completion ft
After Hrs. ft

Description	Elev.	DEPTH (ft)	BLOWS (/6")	UCS Qu (tsf)	MOIST (%)
SHALE - Gray, Brittle *(continued)*					
			60/19"		
				1.8	18
		-45			
Poor Recovery			100/3.8"		
				18.8	49
		-50			
			100/11.8"		
				4.6	15
		-55			
			100/14.8"		
Becomes Red				2.8	15
	582.8	-60			

End of Boring

The Unconfined Compressive Strength (UCS) Failure Mode is indicated by (B-Bulge, S-Shear, P-Penetrometer)
The SPT (N value) is the sum of the last two blow values in each sampling zone (AASHTO T206)

BBS, form 137 (Rev. 8-99)

Illinois Department of Transportation
Division of Highways

SOIL BORING LOG

Page 1 of 1

Date 8/24/23

ROUTE FAI 74 (I-74) DESCRIPTION I-74 over Stony Creek LOGGED BY KEG

SECTION (92-9)BR LOCATION Oakwood Township, IL - 40.12459200° N, 87.85730636° W

COUNTY Vermilion DRILLING METHOD HSA + Mud Rotary Wash at 10' HAMMER TYPE AUTO

STRUCT. NO. 092-001/002 (EX)
Station 1286+17

BORING NO. SB-03
Station 1286+04.26
Offset 84.4 ft LT
Ground Surface Elev. 635.00 ft

Surface Water Elev. ft
Stream Bed Elev. ft

Groundwater Elev.:
First Encounter ft
Upon Completion ft
After Hrs. ft

Description	Elev.	DEPTH (ft)	BLOWS (/6")	UCS Qu (tsf)	MOIST (%)
SILTY CLAY - Brown, Stiff, w/ Some Organics					
LL = 26.9, PL = 15.5, PI = 11.4			3		
			4	1.8	9
			5	P	
	631.5				
CLAYEY SAND - Gray, Well Sorted, Loose			1		
	630.5		2	0.3	15
Sand = 61.6%, Silt = 21.4%, Clay = 17.0%		-5	2	P	
SANDY CLAY - Gray, Soft, w/ Coal and Sanstones Pockets	629.0				
			25		
SHALE - Highly Weathered			50	-	5
MSPT Start			100/13.8"		
				3.4	5
		-10			
Becomes Unweathered, w/ Some Gravel			80/18"		
				2.2	9
		-15			
	616.5				
SILTY CLAY TILL - Stiff			20/17"		
				-	22
		-20			
SILTY CLAY TILL - Stiff *(continued)*					
	611.5				
SHALE - Gray, Hard, Unweathered			100/17.4"		
				2.8	15
		-25			
			100/7.6"		
				6.2	35
	605.0	-30			
End of Boring					
		-40			

The Unconfined Compressive Strength (UCS) Failure Mode is indicated by (B-Bulge, S-Shear, P-Penetrometer)
The SPT (N value) is the sum of the last two blow values in each sampling zone (AASHTO T206)

BBS, form 137 (Rev. 8-99)

MODEL: Default
FILE NAME: P:\Projects\22000\22351\C_DESIGN\0_Discipline\a_Civil\WorkingSheets\Bridge\05_70D66_Sht_Boring2.dgn

EPSTEIN

USER NAME = asharghi	DESIGNED - AS	REVISED -	
	CHECKED - TCG	REVISED -	
PLOT SCALE = 0.167 ' / in.	DRAWN - AS	REVISED -	
PLOT DATE = 6/23/2025	CHECKED - TCG	REVISED -	

STATE OF ILLINOIS
DEPARTMENT OF TRANSPORTATION

BORING LOGS 2
STRUCTURE NO. 092-0210 (E.B.) & 092-0211 (W.B.)

SHEET S-39 OF S-40 SHEETS

F.A. RTE.	SECTION	COUNTY	TOTAL SHEETS	SHEET NO.
74	(92-9)BR	VERMILION	87	72
		CONTRACT NO. 70D66		
	ILLINOIS	FED. AID PROJECT		

6/23/2025 10:29:13 AM

Illinois Department of Transportation
Division of Highways

SOIL BORING LOG

Date 8/23/23

ROUTE FAI 74 (I-74) DESCRIPTION I-74 over Stony Creek LOGGED BY KEG

SECTION (92-9)BR LOCATION Oakwood Township, IL - 40.12413381° N, 87.85744411° W

COUNTY Vermilion DRILLING METHOD HSA + Mud Rotary Wash at 10' HAMMER TYPE AUTO

STRUCT. NO. 092-001/002 (EX)
Station 1286+17

BORING NO. SB-04
Station 1285+63.26
Offset 82.0 ft RT
Ground Surface Elev. 632.97 ft

Surface Water Elev. ft
Stream Bed Elev. ft

Groundwater Elev.:
First Encounter ft
Upon Completion ft
After Hrs. ft

Description	Elev.	DEPTH (ft)	BLOWS (/6")	UCS Qu (tsf)	MOIST (%)
SILTY CLAY - Brown, Stiff			2		
	631.5				
SANDY CLAY - Stiff	631.2		5	1.5	27
			6	P	
SILTY CLAY - Brown, Medium Stiff					
	629.5				
SILTY CLAY TILL - Dark Brown, Medium Stiff LL = 36.0, PL = 19.6, PI = 16.4			1		
			2	0.8	23
		-5	4	B	
	627.0				
SILTY CLAY - Brown, Brittle, Hard			12		
			20	-	7
			30		
			24		
			20	-	6
		-10	11		
	622.0				
SILTY CLAY TILL - Gray, Stiff			6		
			6	3.1	19
			8	B	
			2		
			3	3.1	21
		-15	5	B	
LL = 25.1, PL = 23.8, PI = 1.3			16		
			20	1.7	17
			28	S	
	614.5				
SHALE - Greenish Gray, Soft, Highly Weathered			6		
			21	-	17
		-20	31		

Description	DEPTH (ft)	BLOWS (/6")	UCS Qu (tsf)	MOIST (%)
SHALE - Greenish Gray, Soft, Highly Weathered *(continued)*				
Becomes Brown, MSPT start		100/17.5"		
			2.7	17
	-25			
Becomes Gray		50/20"		
			1.3	19
	-30			
Becomes Unweathered, Hard		100/12"		
			7.5	19
	-35			
Poor Recovery		100/1.3"		
			79.5	30
	-40			

The Unconfined Compressive Strength (UCS) Failure Mode is indicated by (B-Bulge, S-Shear, P-Penetrometer)
The SPT (N value) is the sum of the last two blow values in each sampling zone (AASHTO T206)

BBS, form 137 (Rev. 8-99)

Illinois Department of Transportation
Division of Highways

SOIL BORING LOG

Date 8/23/23

ROUTE FAI 74 (I-74) DESCRIPTION I-74 over Stony Creek LOGGED BY KEG

SECTION (92-9)BR LOCATION Oakwood Township, IL - 40.12413381° N, 87.85744411° W

COUNTY Vermilion DRILLING METHOD HSA + Mud Rotary Wash at 10' HAMMER TYPE AUTO

STRUCT. NO. 092-001/002 (EX)
Station 1286+17

BORING NO. SB-04
Station 1285+63.26
Offset 82.0 ft RT
Ground Surface Elev. 632.97 ft

Surface Water Elev. ft
Stream Bed Elev. ft

Groundwater Elev.:
First Encounter ft
Upon Completion ft
After Hrs. ft

Description	Elev.	DEPTH (ft)	BLOWS (/6")	UCS Qu (tsf)	MOIST (%)
SHALE - Greenish Gray, Soft, Highly Weathered *(continued)*					
			100/13.6"		
				4.5	17
	588.0	-45			
End of Boring					
		-50			
		-55			
		-60			

The Unconfined Compressive Strength (UCS) Failure Mode is indicated by (B-Bulge, S-Shear, P-Penetrometer)
The SPT (N value) is the sum of the last two blow values in each sampling zone (AASHTO T206)

BBS, form 137 (Rev. 8-99)

MODEL: Default
FILE NAME: P:\Projects\22000\22351C_DESIGN\01_Discipline\a_Civil\Working\Sheets\Bridge\D5_70D66_Sht_Boring3.dgn

6/23/2025 10:29:15 AM

EPSTEIN

USER NAME = asharghi	DESIGNED - AS	REVISED -	
	CHECKED - TCG	REVISED -	
PLOT SCALE = 0.167 ' / in.	DRAWN - AS	REVISED -	
PLOT DATE = 6/23/2025	CHECKED - TCG	REVISED -	

STATE OF ILLINOIS
DEPARTMENT OF TRANSPORTATION

BORING LOGS 3
STRUCTURE NO. 092-0210 (E.B.) & 092-0211 (W.B.)

SHEET S-40 OF S-40 SHEETS

F.A. RTE.	SECTION	COUNTY	TOTAL SHEETS	SHEET NO.
74	(92-9)BR	VERMILION	87	73
		CONTRACT NO. 70D66		
	ILLINOIS	FED. AID PROJECT		

CENTERLINE INTERSTATE OR MULTI-LANE TWO WAY DIVIDED HIGHWAY

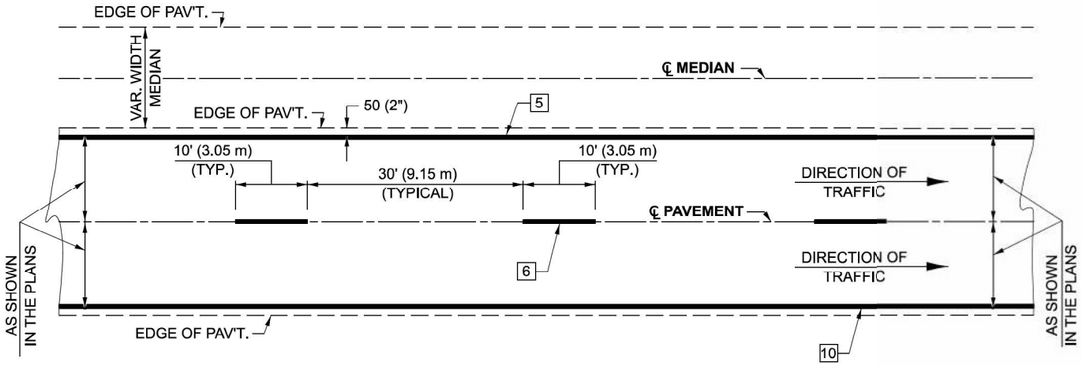

NOTE: PAVEMENT MARKINGS ARE TO BE EXTENDED THROUGH OMISSIONS WHEN APPLICABLE.

NOTE: SEE ARTICLES 780.04 & 781.03 FOR LOCATION OF STRIPES AND MARKERS RELATIVE TO EDGES OR JOINTS.

FOR RAISED REFLECTIVE PAVEMENT MARKERS, REFER TO STANDARD 781001.

TYPICAL EXIT RAMP TERMINAL

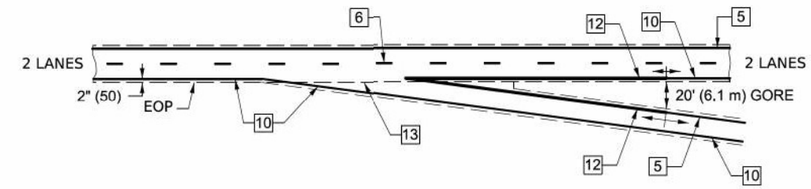

EXIT RAMP TERMINAL with EXCLUSIVE (auxiliary) LANE

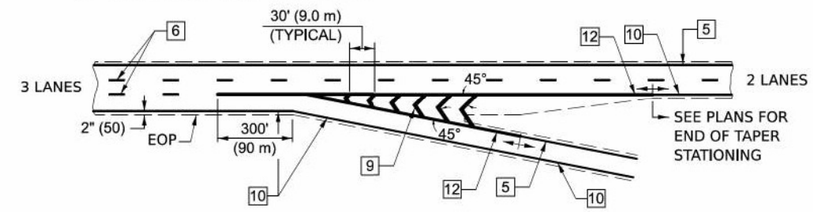

TYPICAL ENTRANCE RAMP TERMINAL

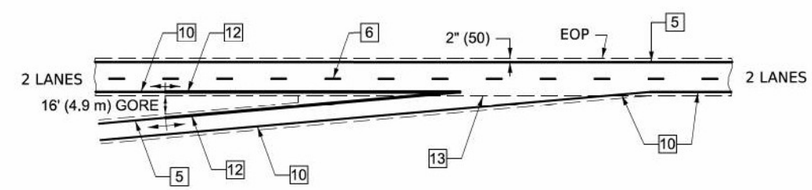

ENTRANCE RAMP TERMINAL with EXCLUSIVE LANE

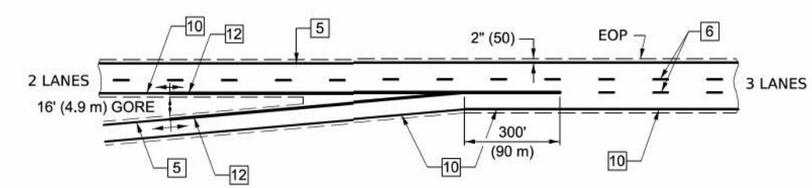

TYPICAL PAVEMENT MARKING LEGEND

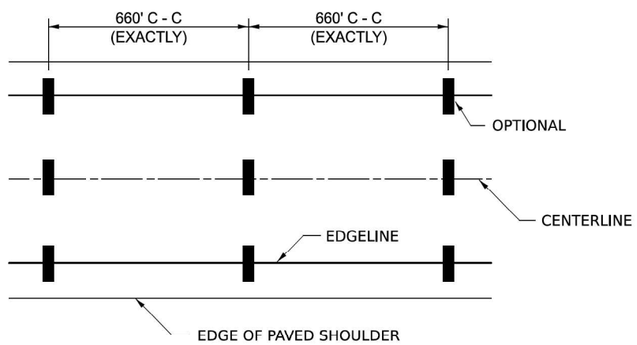

IT WILL BE NECESSARY TO HAVE A REPRESENTATIVE OF THE STATE POLICE PRESENT SO THAT THE ACCURACY OF MEASUREMENT CAN BE ATTESTED TO IN COURT.

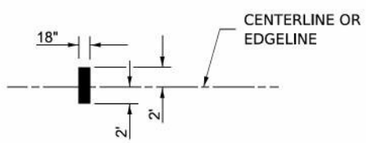

1. 4" (100) SKIP-DASH (YELLOW)
2. 4" (100) SOLID (YELLOW)
3. 12" (300) DIAGONAL (YELLOW)
4. 4" (100) DOUBLE YELLOW (NARROW)
5. 6" (150) SOLID (YELLOW)
6. 6" (150) SKIP-DASH (WHITE)
7. 4" (100) SKIP-DASH (WHITE)
8. 4" (100) SOLID (WHITE)
9. 12" (300) DIAGONAL (WHITE)
10. 6" (150) SOLID (WHITE)
11. 24" (600) STOP BAR (WHITE)
12. 8" (200) SOLID (WHITE)
13. 6" (150) LANE LINE EXTENSIONS (WHITE)

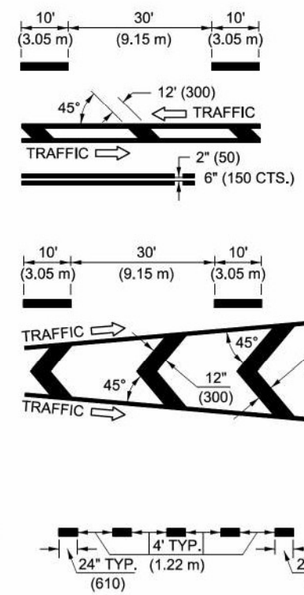

AERIAL SPEED CHECK ZONES

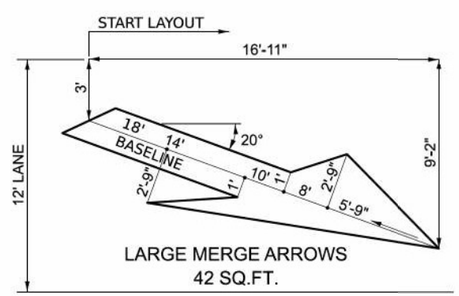

Note: All dimensions are in INCHES (millimeters) unless otherwise shown.

DISTRICT 5 DETAIL NO. 7800BBBB

F.A.I. RTE.	SECTION	COUNTY	TOTAL SHEETS	SHEET NO.
74	(92-9)BR	VERMILION	87	74
		CONTRACT NO. 70D66		
	ILLINOIS	FED. AID PROJECT		

EPSTEIN

USER NAME = asharghi	DESIGNED - BAW	REVISED -	
	DRAWN - DR	REVISED -	
PLOT SCALE = 2.0000 ' / in.	CHECKED - JRK	REVISED -	
PLOT DATE = 6/23/2025	DATE - 05/01/2025	REVISED -	

STATE OF ILLINOIS
DIVISION OF TRANSPORTATION

I-74 OVER STONY CREEK
PAVEMENT MARKING (INTERSTATE & MULTI-LANE APPLICATIONS)

SCALE: NONE | SHEET 1 OF SHEETS | STA. TO STA.

6/23/2025 10:28:24 AM
P:\Projects\22000\22331C_DESIGN\01_Disciplines_Civil\Working\Sheets\70D96_D5-Std 7800BBBB.dgn

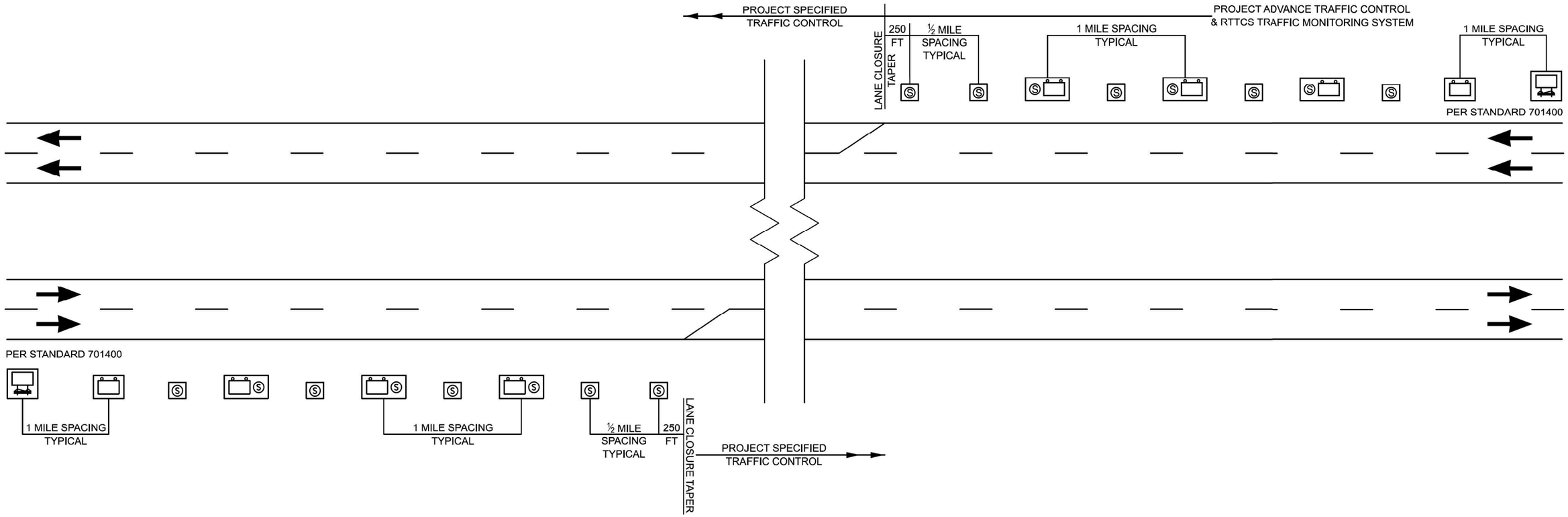

LEGEND

REAL-TIME TRAFFIC CONTROL WARNING SIGN
PROJECT SIGN SHALL BE A 48" X 96" (1200MM X 2400MM)
SIGN THAT SAYS:
"STOPPED TRAFFIC NEXT MILE WHEN FLASHING".

STOPPED TRAFFIC
NEXT MILE
WHEN FLASHING

SINGLE PORTABLE CHANGEABLE MESSAGE SIGN PLACED 1 MILE
IN ADVANCE OF THE REAL-TIME TRAFFIC CONTROL WARNING SIGN.
IT SHALL READ: "RIGHT/LEFT LANE CLOSED // X MILES AHEAD"
THIS PORTABLE CHANGEABLE MESSAGE SIGN IS INCLUDED IN STANDARD 701400

(S) REAL-TIME TRAFFIC MONITORING SENSOR UNIT

NOTES:

1. THE NUMBER OF REAL-TIME TRAFFIC CONTROL WARNINGS SIGNS MAY BE CHANGED AS DIRECTED BY THE ENGINEER. RELOCATION OF REAL-TIME TRAFFIC CONTROL STATIC WARNING SIGNS IS INCLUDED IN THE REAL-TIME TRAFFIC CONTROL PAY ITEMS.
2. REAL-TIME TRAFFIC CONTROL MONITORING SENSOR UNITS SPACED APPROXIMATELY EVERY 1/2 MILE AND REAL-TIME TRAFFIC CONTROL WARNING SIGNS SPACED EVERY 1 MILE OR AS DIRECTED BY THE ENGINEER.
3. THE FIRST REAL-TIME TRAFFIC MONITORING SENSORS UNIT IS TO BE PLACED 250 FOOT UPSTREAM OF THE TAPER.
4. THE SECOND REAL-TIME SPEED TRAFFIC MONITORING SENSOR UNIT IS TO BE PLACED 250 FOOT IN ADVANCE OF THE RIGHT LANE/LEFT LANE CLOSED 1/2 MILE SIGN (STD. 701400).
5. THE FIRST REAL-TIME TRAFFIC CONTROL WARNINGS SIGN SHOULD BE PLACED 500 FOOT IN ADVANCE OF THE RIGHT/LEFT LANE CLOSED 1 MILE SIGN (STD. 701400)
6. THE NUMBER OF RTTCS DEVICES MAY BE REDUCED BASED ON THE LOCATION OF THE PORTABLE CHANGEABLE MESSAGE SIGN PER (STD. 701400) AS DIRECTED BY THE ENGINEER.

Note: All dimensions are in INCHES (millimeters) unless otherwise shown.

DISTRICT 5 DETAIL NO. X032AAAA

USER NAME = asharghi	DESIGNED - BSW	REVISED -	
	DRAWN - DR	REVISED -	
PLOT SCALE = 2.0000 ' / in.	CHECKED - JRK	REVISED -	
PLOT DATE = 6/23/2025	DATE - 05/01/2025	REVISED -	

EPSTEIN

STATE OF ILLINOIS
DIVISION OF TRANSPORTATION

I-74 OVER STONY CREEK
REAL-TIME TRAFFIC CONTROL SYSTEM

SCALE: NONE | SHEET $STD2 OF SHEETS | STA. TO STA.

F.A.I. RTE.	SECTION	COUNTY	TOTAL SHEETS	SHEET NO.
74	(92-9)BR	VERMILION	87	75

CONTRACT NO. 70D66

ILLINOIS | FED. AID PROJECT

6/23/2025 10:28:28 AM
P:\Projects\2200\22251C_DESIGN\01_Design\Area_Civil\Working\Sheets\70D66_D5-Std X032AAA-dgn

(A)

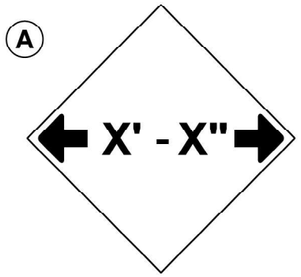

W12-2(0)-48"x48"(1200x1200)

SIGN (A) 2 SIGNS - W12-2(O)-48"x48"(1200x1200) ARE TO BE PLACED AS SHOWN IN THE PLANS OR AS DIRECTED BY THE ENGINEER.

SIGN (B) 2 SIGNS - (SIGN PANEL, TYPE II) AS SHOWN ARE TO BE PLACED AS SHOWN IN THE PLANS OR AS DIRECTED BY THE ENGINEER.

(B)

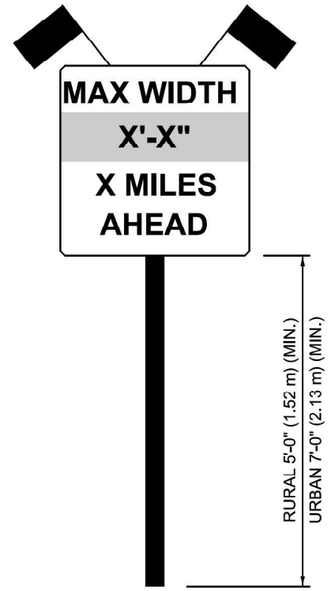

SIGN PANEL, TYPE II

(B)

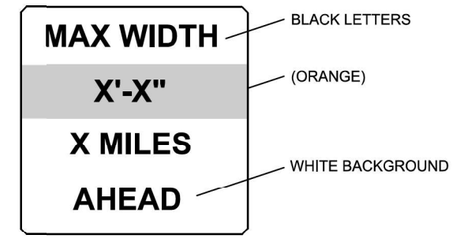

W12-I103(O)-48"x48"(1200x1200)
"D" LETTERS/NUMBERS

GENERAL NOTES

1. ALL TRAFFIC CONTROL DEVICES SHALL BE FURNISHED, ERECTED AND MAINTAINED BY THE CONTRACTOR.
2. ALL (B) SIGNS SHALL HAVE FLAGS INSTALLED UNLESS OTHERWISE DIRECTED.
3. LOCATIONS OF TRAFFIC CONTROL DEVICES MAY BE ADJUSTED BY THE ENGINEER.
4. ALL TRAFFIC CONTROL SHOWN ON THIS SHEET SHALL BE PAID FOR AT THE CONTRACT LUMP SUM PRICE FOR WIDTH RESTRICTION SIGNING.
5. ALL SIGNS SHALL BE POST MOUNTED UNLESS OTHERWISE DIRECTED.
6. ALL SIGNS SHOWN ORANGE (O) SHALL BE FLUORESCENT ORANGE.
7. ALL SIGNS SHOWN SHALL CONSIST OF THE CURRENT RETROREFLECTIVE SHEETING REQUIREMENTS AS OUTLINED IN SECTION 1106.01 OF THE STANDARD SPECIFICATIONS BOOK.

Note: All dimensions are in INCHES (millimeters) unless otherwise shown.

DISTRICT 5 DETAIL NO. X7200201

F.A.I. RTE.	SECTION	COUNTY	TOTAL SHEETS	SHEET NO.
74	(92-9)BR	VERMILION	87	76
		CONTRACT NO. 70D66		
		ILLINOIS	FED. AID PROJECT	

EPSTEIN

USER NAME = asharghi	DESIGNED - BAW	REVISED -
	DRAWN - DR	REVISED -
PLOT SCALE = 2.0000 ' / in.	CHECKED - JRK	REVISED -
PLOT DATE = 6/23/2025	DATE - 05/01/2025	REVISED -

STATE OF ILLINOIS
DIVISION OF TRANSPORTATION

I-74 OVER STONY CREEK
WIDTH RESTRICTION SIGNING

SCALE: NONE | SHEET 2 OF SHEETS | STA. TO STA.

6/23/2025 10:28:31 AM
P:\Projects\2009\2251\C_DESIGN\01_Discipline\a_Civil\Working\Sheets\70D66_D5-Sted X7200201.dgn

DETAIL FOR TEMPORARY RUMBLE STRIPS

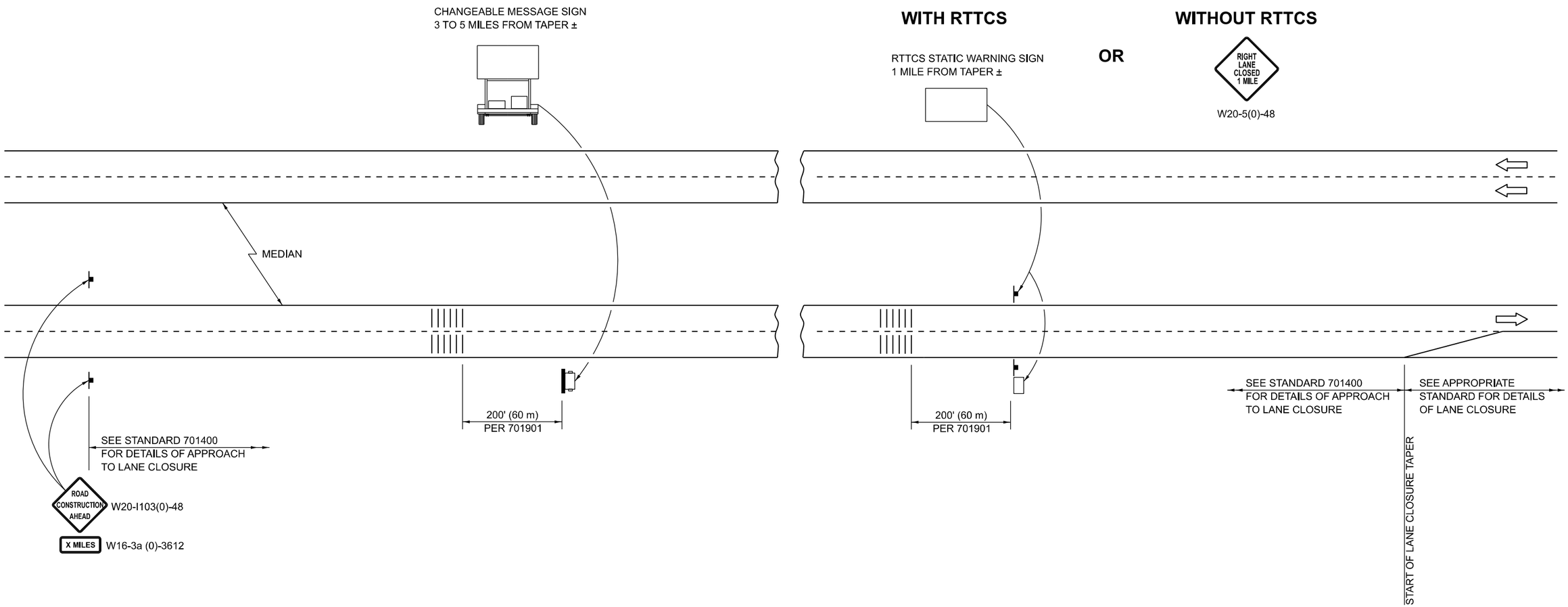

SYMBOLS

- SIGN
- TEMPORARY RUMBLE STRIPS
- CHANGEABLE MESSAGE SIGN
- RTTCS STATIC WARNING SIGN

GENERAL NOTES

REMOVE THE TEMPORARY RUMBLE STRIPS PRIOR TO THE REMOVAL OF THE ADVANCED WARNING SIGNS.

ALL DIMENSIONS ARE IN INCHES (MILLIMETERS) UNLESS OTHERWISE SHOWN.

SEE HIGHWAY STANDARD 701901 FOR TEMPORARY RUMBLE STRIP INSTALLATION.

DISTRICT 5 DETAIL NO. 70106700

F.A.I. RTE.	SECTION	COUNTY	TOTAL SHEETS	SHEET NO.
74	(92-9)BR	VERMILION	87	77
		CONTRACT NO. 70D66		
	ILLINOIS	FED. AID PROJECT		

EPSTEIN

USER NAME = asharghi	DESIGNED - AS	REVISED -	STATE OF ILLINOIS DIVISION OF TRANSPORTATION
	DRAWN - AS	REVISED -	
PLOT SCALE = 2.0000 ' / in.	CHECKED - JRK	REVISED -	
PLOT DATE = 6/23/2025	DATE - 05/01/2025	REVISED -	

I-74 OVER STONY CREEK
DETAIL FOR TEMPORARY RUMBLE STRIPS

SCALE: NONE | SHEET $STD2 OF SHEETS | STA. TO STA.

6/23/2025 10:28:33 AM
P:\Projects\22000\22331C_DESIGN\01_Disciplines_Civil\Working\Sheets\70D66_D5-Std Temp Rumble Strips.dgn

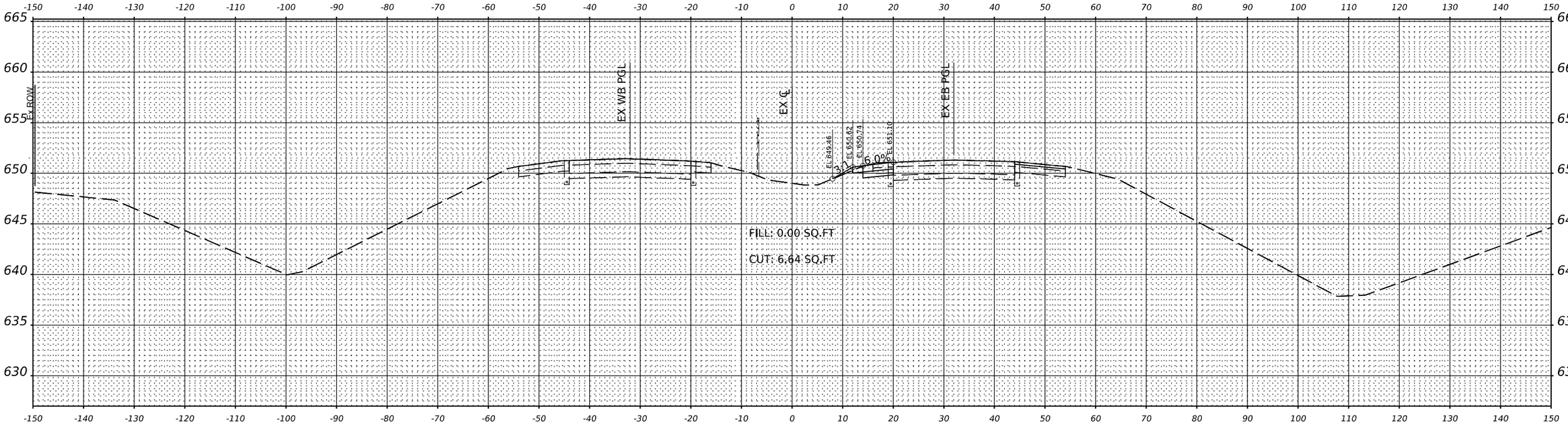

STA 1281+00.00

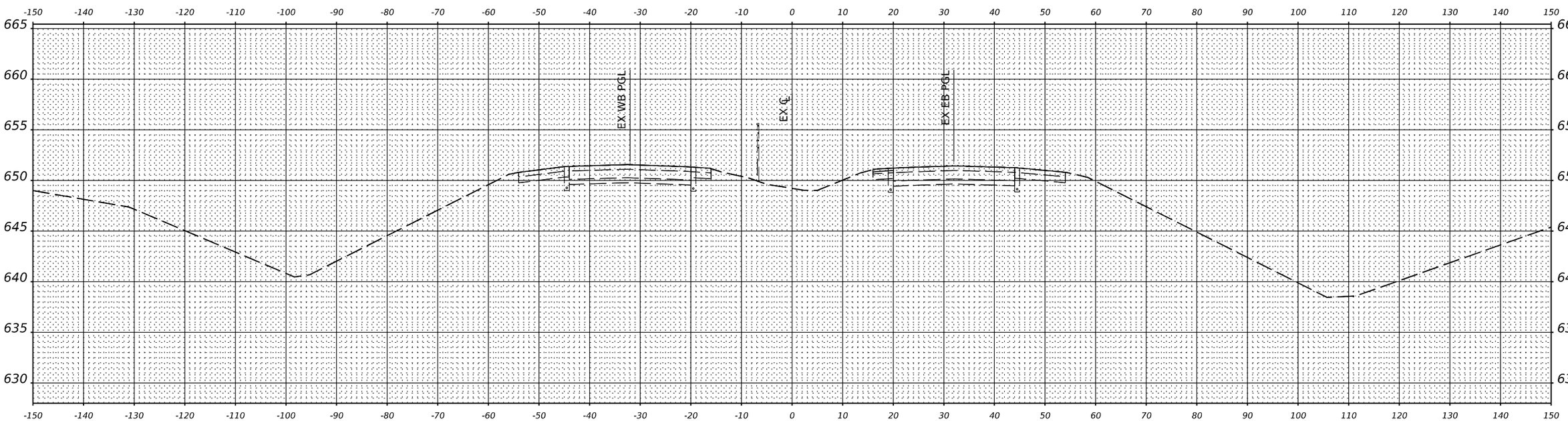

STA 1280+50.00

6/23/2025 10:28:24 AM
P:\Projects\22000\22351C_DESIGN\01_Disciplines\a_Civil\WorkingSheets\D5_70D66-ProjXS.dgn:dgn

EPSTEIN	USER NAME = asharghi	DESIGNED - CC	REVISED -	STATE OF ILLINOIS DIVISION OF TRANSPORTATION	I-74 OVER STONY CREEK EXISTING CROSS SECTIONS	F.A.I. RTE.	SECTION	COUNTY	TOTAL SHEETS / SHEET NO.
		DRAWN - CC	REVISED -			74	(92-9)BR	VERMILION	87 / 78
	PLOT SCALE = 0.16665441 ' / in.	CHECKED - JRK	REVISED -					CONTRACT NO. 70D66	
	PLOT DATE = 6/23/2025	DATE - 05/01/2025	REVISED -		SCALE: SHEET 1 OF 10 SHEETS STA. TO STA.			ILLINOIS FED. AID PROJECT	

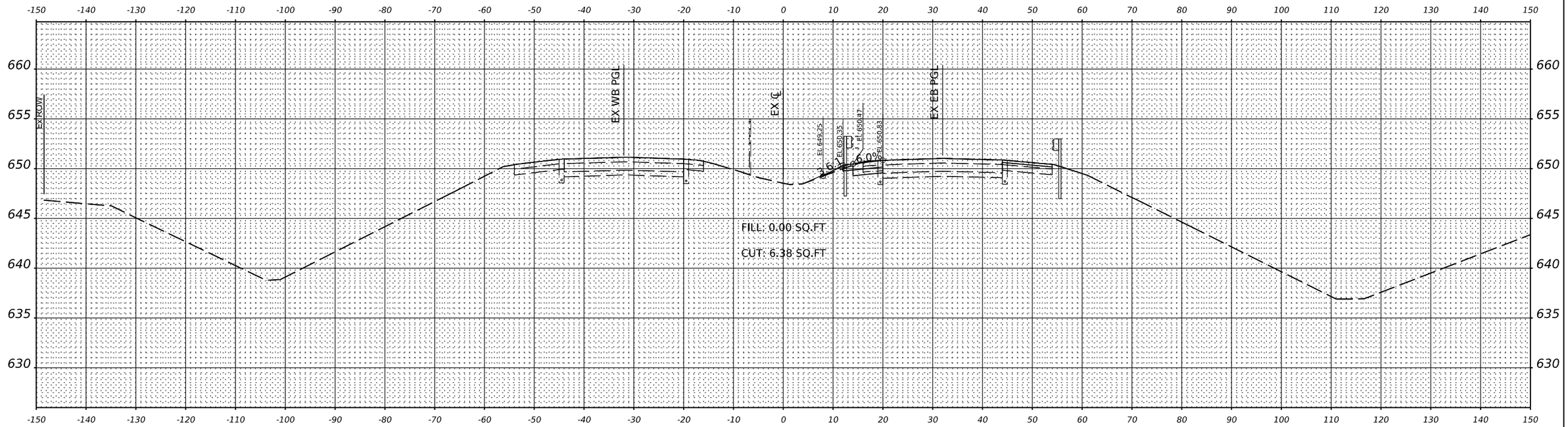

STA 1282+00.00

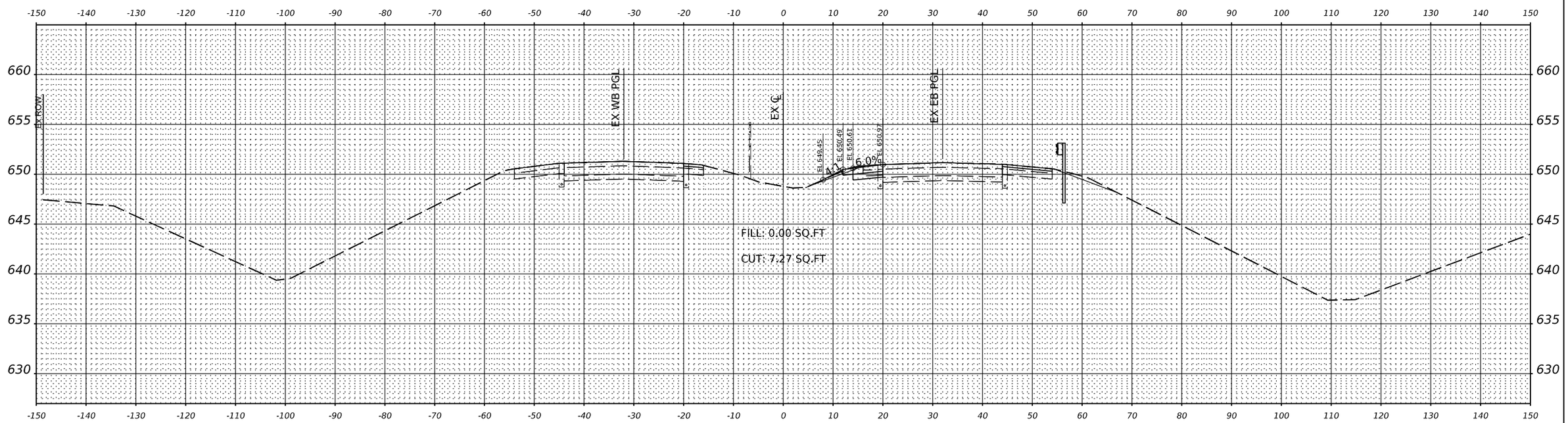

STA 1281+50.00

6/23/2025 10:28:35 AM
P:\Projects\22000\22351\C_DESIGN\01_Discipline\a_Civil\Working\Sheets\D5_70066-ProxXS.dgn-dgn

EPSTEIN	USER NAME = asharghi	DESIGNED - CC	REVISED -
		DRAWN - CC	REVISED -
	PLOT SCALE = 0.16665461 ' / in.	CHECKED - JRK	REVISED -
	PLOT DATE = 6/23/2025	DATE - 05/01/2025	REVISED -

STATE OF ILLINOIS
DIVISION OF TRANSPORTATION

I–74 OVER STONY CREEK
EXISTING CROSS SECTIONS

SCALE: | SHEET 2 OF 10 SHEETS | STA. | TO STA.

F.A.I. RTE.	SECTION	COUNTY	TOTAL SHEETS	SHEET NO.
74	(92-9)BR	VERMILION	87	79
		CONTRACT NO. 70D66		
		ILLINOIS	FED. AID PROJECT	

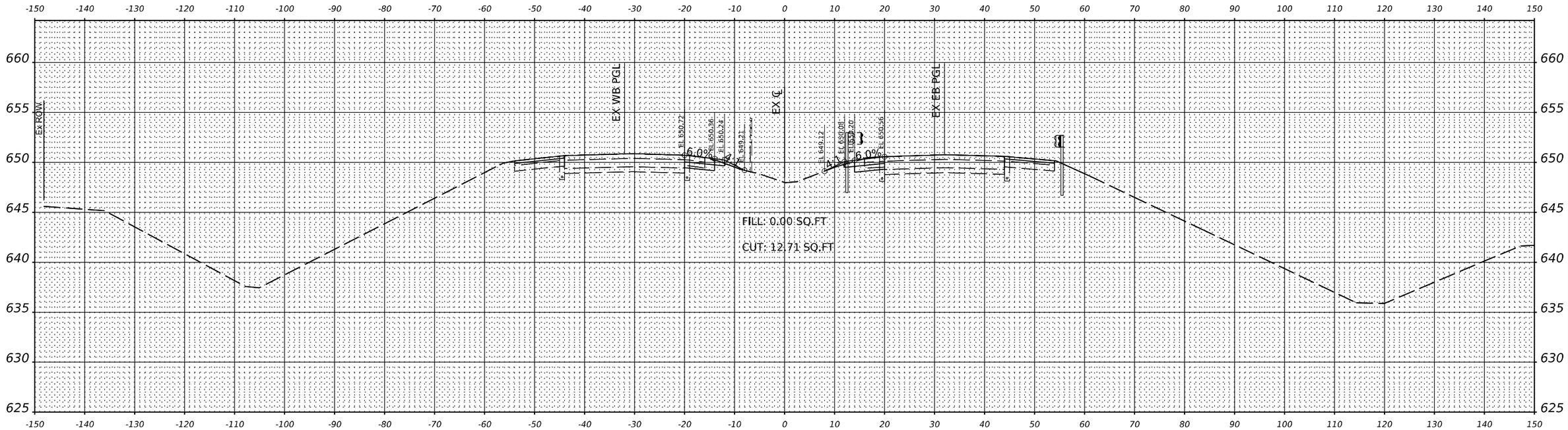

STA 1283+00.00

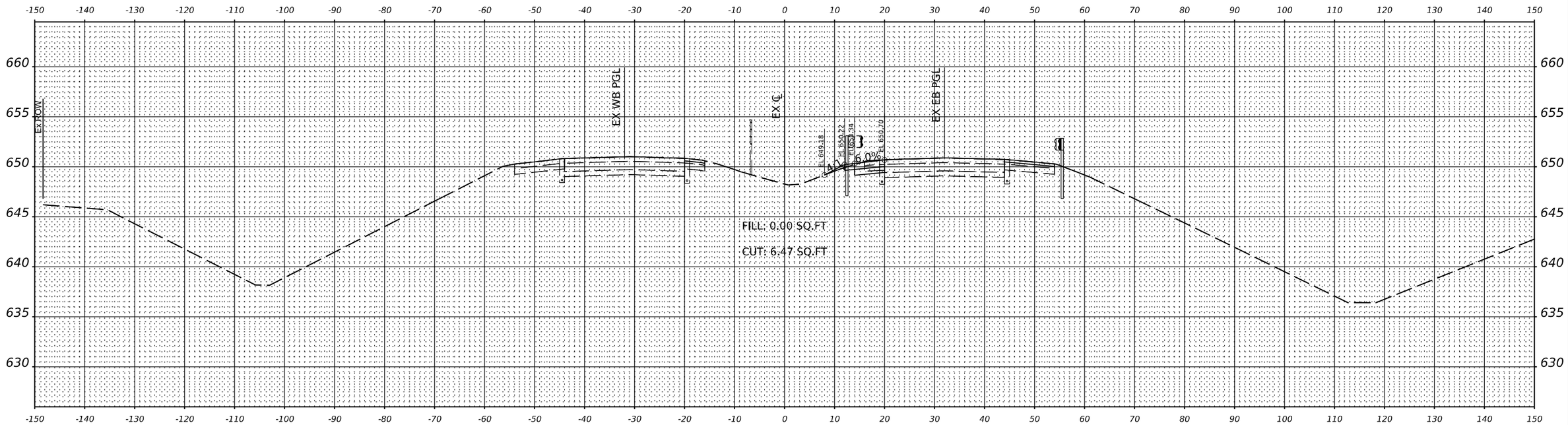

STA 1282+50.00

6/23/2025 10:28:36 AM
P:\Projects\22000\22351\C_DESIGN\01_Discipline\a_Civil\Working\Sheets\D5_70066-ProxXS.dgn-dgn

EPSTEIN	USER NAME = asharghi	DESIGNED - CC	REVISED -
		DRAWN - CC	REVISED -
	PLOT SCALE = 0.16665441 ' / in.	CHECKED - JRK	REVISED -
	PLOT DATE = 6/23/2025	DATE - 05/01/2025	REVISED -

STATE OF ILLINOIS
DIVISION OF TRANSPORTATION

I-74 OVER STONY CREEK
EXISTING CROSS SECTIONS

SCALE: SHEET 3 OF 10 SHEETS STA. TO STA.

F.A.I. RTE.	SECTION	COUNTY	TOTAL SHEETS	SHEET NO.
74	(92-9)BR	VERMILION	87	80
		CONTRACT NO. 70D66		
		ILLINOIS	FED. AID PROJECT	

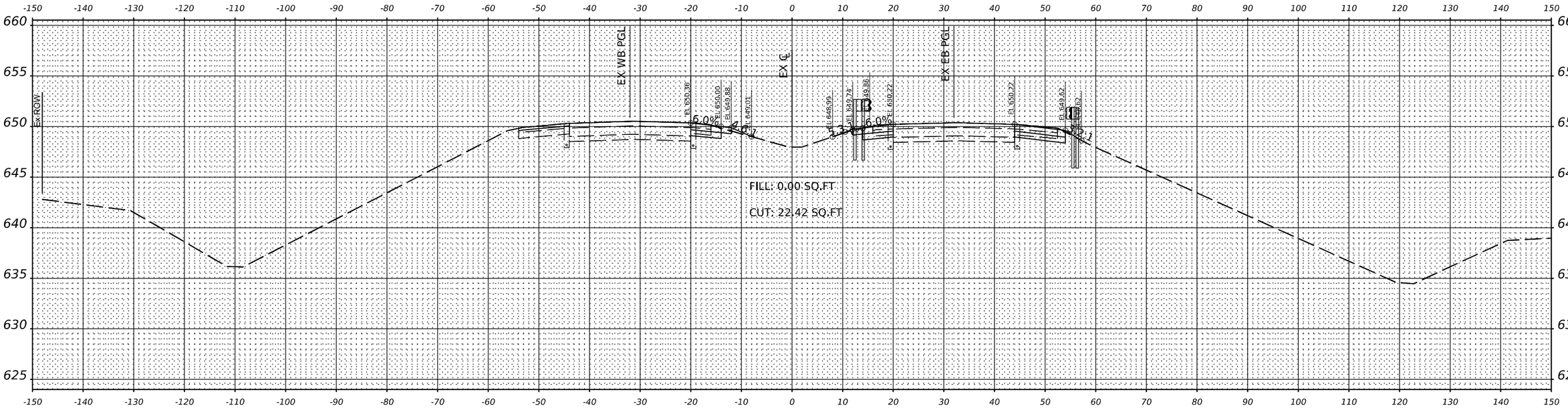

STA 1284+00.00

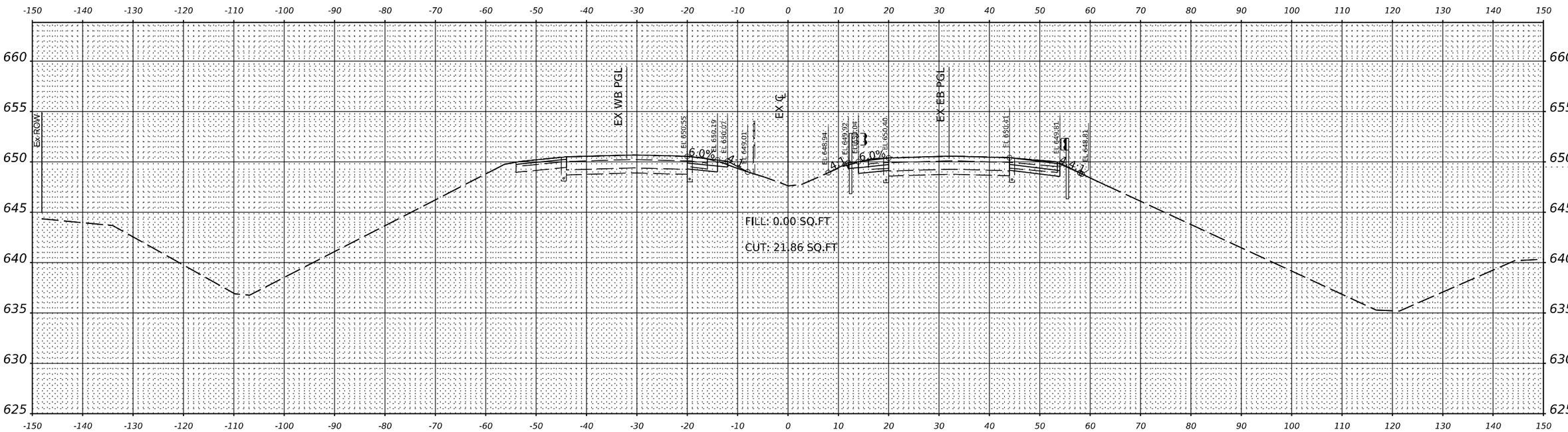

STA 1283+50.00

6/23/2025 10:28:37 AM
P:\Projects\220000\2251\C_DESIGN\01_Discipline\a_Civil\Working\Sheets\D5_70066-ProxXS.dgn-dgn

EPSTEIN	USER NAME = asharghi	DESIGNED - CC	REVISED -
		DRAWN - CC	REVISED -
	PLOT SCALE = 0.16665441 ' / in.	CHECKED - JRK	REVISED -
	PLOT DATE = 6/23/2025	DATE - 05/01/2025	REVISED -

STATE OF ILLINOIS
DIVISION OF TRANSPORTATION

I–74 OVER STONY CREEK
EXISTING CROSS SECTIONS

SCALE: | SHEET 4 OF 10 SHEETS | STA. | TO STA.

F.A.I. RTE.	SECTION	COUNTY	TOTAL SHEETS	SHEET NO.
74	(92-9)BR	VERMILION	87	81
		CONTRACT NO. 70D66		
		ILLINOIS	FED. AID PROJECT	

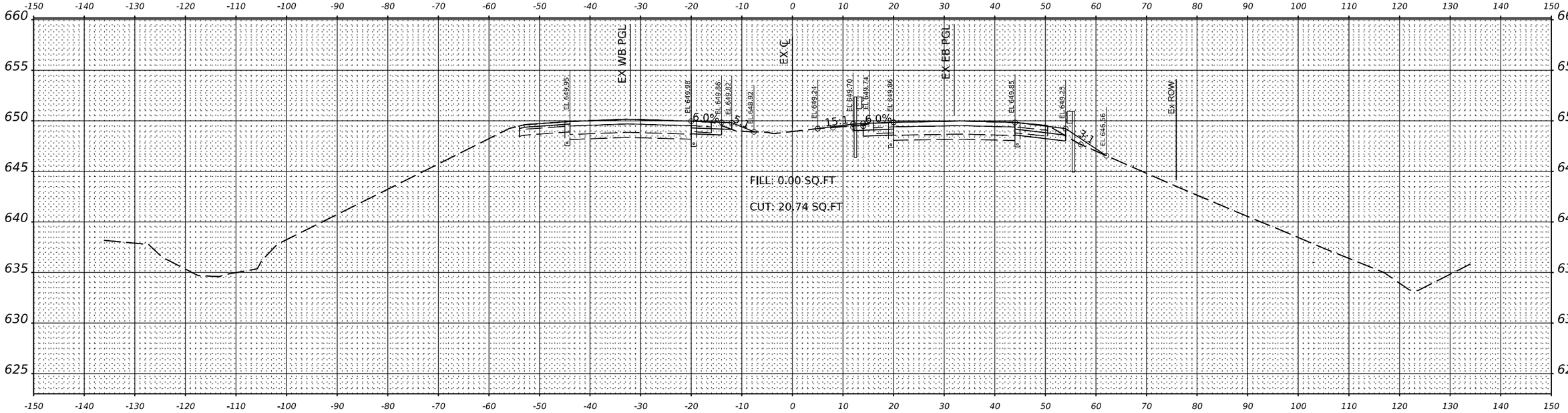

STA 1285+00.00

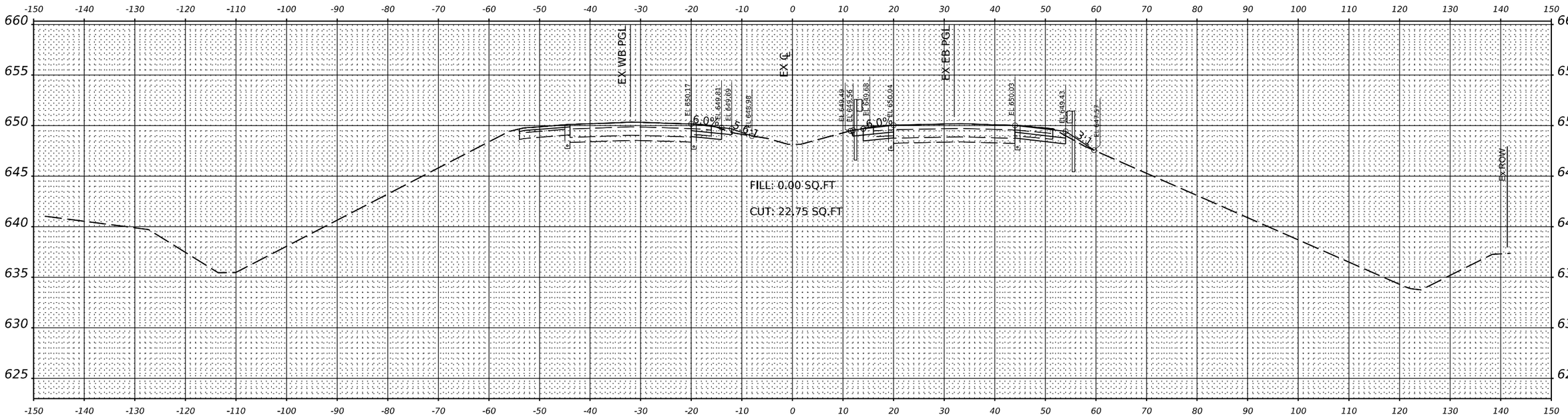

STA 1284+50.00

6/23/2025 10:28:37 AM
P:\Projects\2200\22351C_DESIGN\01_Design\Illinois_Civil\Working\Sheets\D5_70D66-ProjXS.dgn.dgn

EPSTEIN	USER NAME = asharghi	DESIGNED - CC	REVISED -
		DRAWN - CC	REVISED -
	PLOT SCALE = 0.16665441 ' / in.	CHECKED - JRK	REVISED -
	PLOT DATE = 6/23/2025	DATE - 05/01/2025	REVISED -

STATE OF ILLINOIS
DIVISION OF TRANSPORTATION

I-74 OVER STONY CREEK
EXISTING CROSS SECTIONS

SCALE: | SHEET 5 OF 10 SHEETS | STA. TO STA.

F.A.I. RTE.	SECTION	COUNTY	TOTAL SHEETS	SHEET NO.
74	(92-9)BR	VERMILION	87	82
		CONTRACT NO. 70D66		
		ILLINOIS	FED. AID PROJECT	

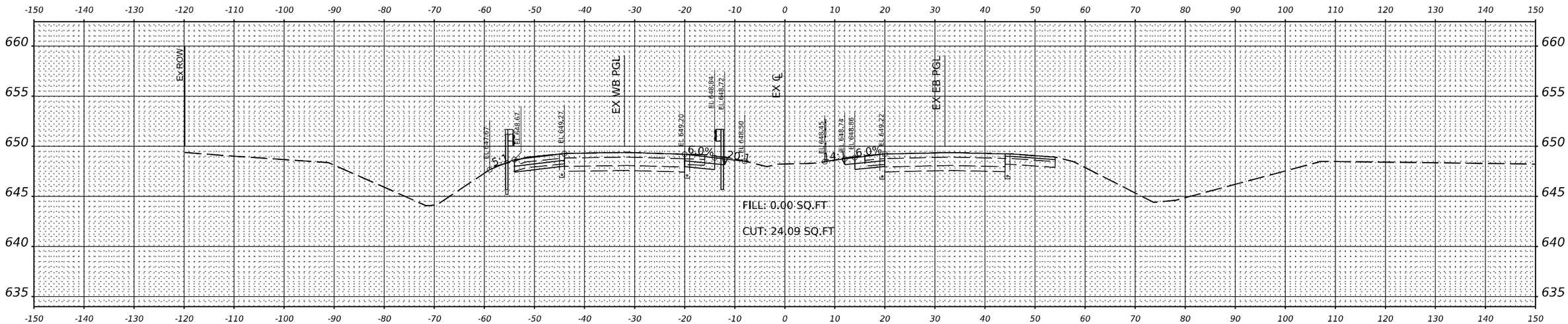

STA 1288+00.00

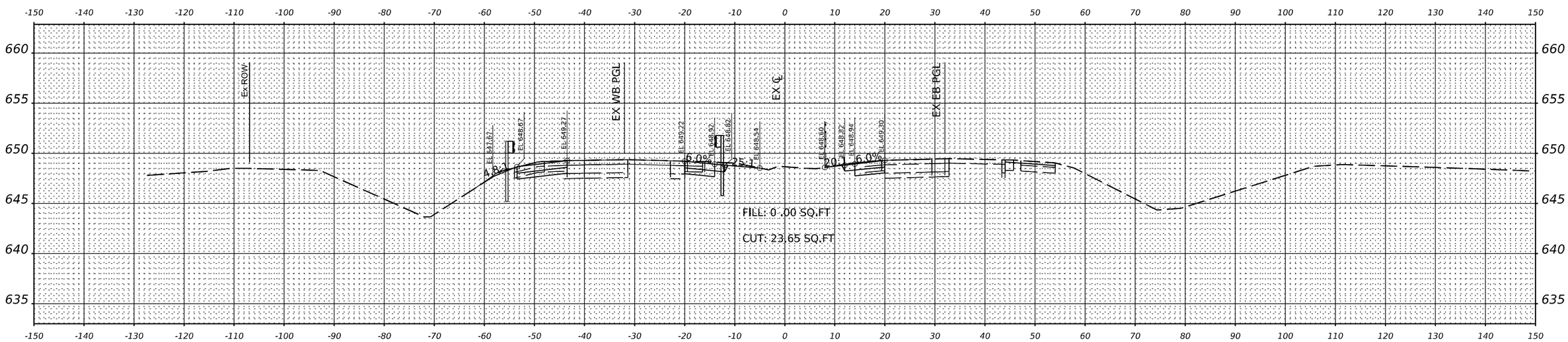

STA 1287+50.00

EPSTEIN

USER NAME = asharghi	DESIGNED - CC	REVISED -	
	DRAWN - CC	REVISED -	
PLOT SCALE = 0.16665461 ' / in.	CHECKED - JRK	REVISED -	
PLOT DATE = 6/23/2025	DATE - 05/01/2025	REVISED -	

STATE OF ILLINOIS
DIVISION OF TRANSPORTATION

I-74 OVER STONY CREEK
EXISTING CROSS SECTIONS

SCALE: | SHEET 6 OF 10 SHEETS | STA. TO STA.

F.A.I. RTE.	SECTION	COUNTY	TOTAL SHEETS	SHEET NO.
74	(92-9)BR	VERMILION	87	83
		CONTRACT NO. 70D66		
		ILLINOIS FED. AID PROJECT		

6/23/2025 10:28:38 AM
P:\Projects\22000\22351\C_DESIGN\01_Discipline\a_Civil\Working\Sheets\D5_70D66-ProXS-dgn.dgn

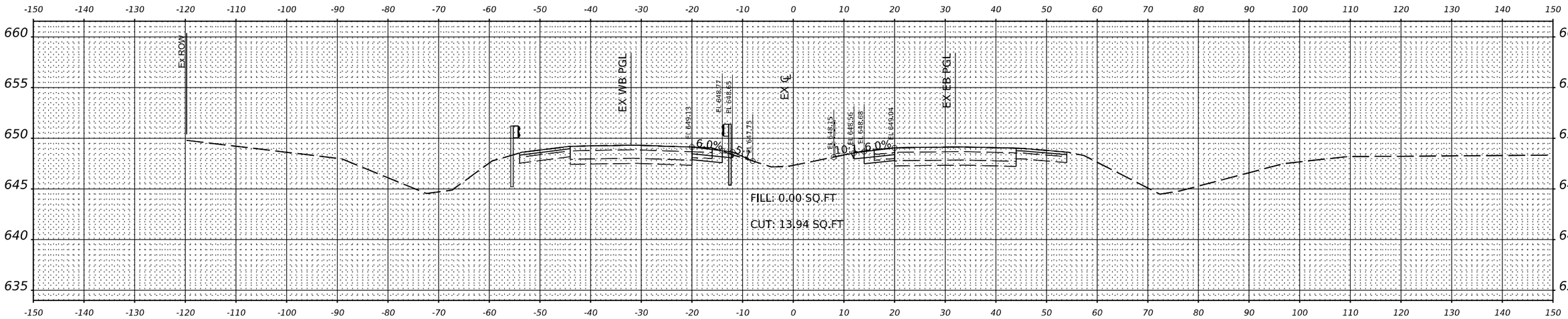

STA 1289+00.00

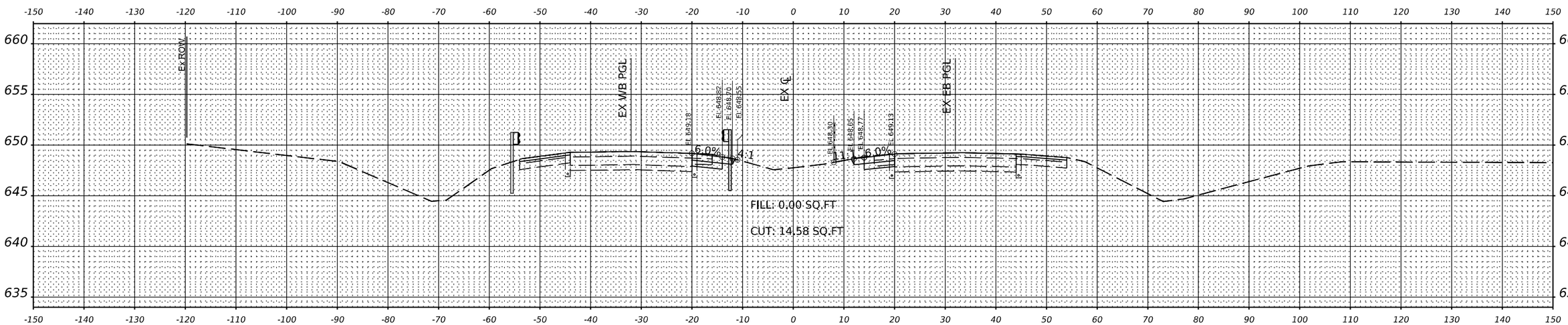

STA 1288+50.00

6/23/2025 10:28:39 AM
P:\Projects\2300\22351_DESIGN\01_Discipline\a_Civil\Working\Sheets\D5_70D66-PropXS.dgn

EPSTEIN

USER NAME = asharghi	DESIGNED - CC	REVISED -	
	DRAWN - CC	REVISED -	
PLOT SCALE = 0.16665441 ' / in.	CHECKED - JRK	REVISED -	
PLOT DATE = 6/23/2025	DATE - 05/01/2025	REVISED -	

STATE OF ILLINOIS
DIVISION OF TRANSPORTATION

I-74 OVER STONY CREEK
EXISTING CROSS SECTIONS

SCALE: | SHEET 7 OF 10 SHEETS | STA. | TO STA.

F.A.I. RTE.	SECTION	COUNTY	TOTAL SHEETS	SHEET NO.
74	(92-9)BR	VERMILION	87	84
		CONTRACT NO. 70D66		
		ILLINOIS	FED. AID PROJECT	

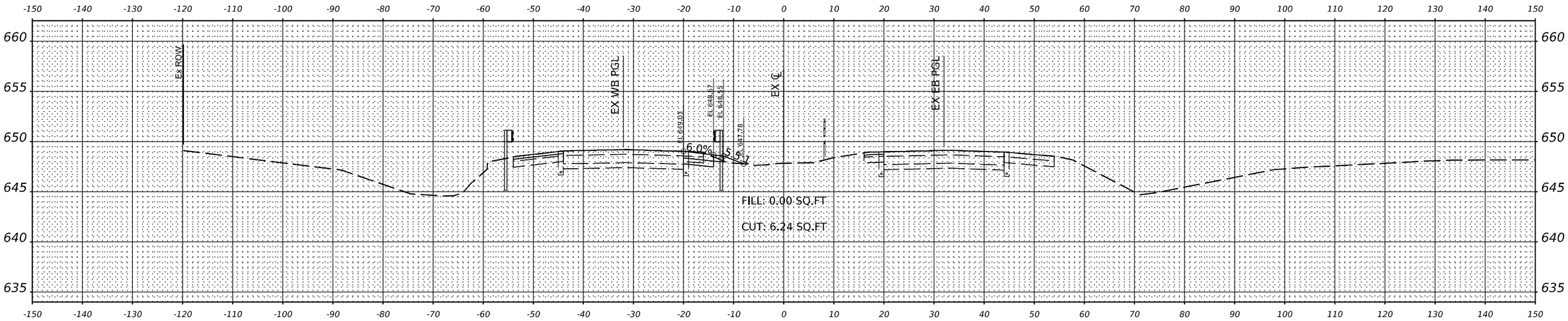

STA 1290+00.00

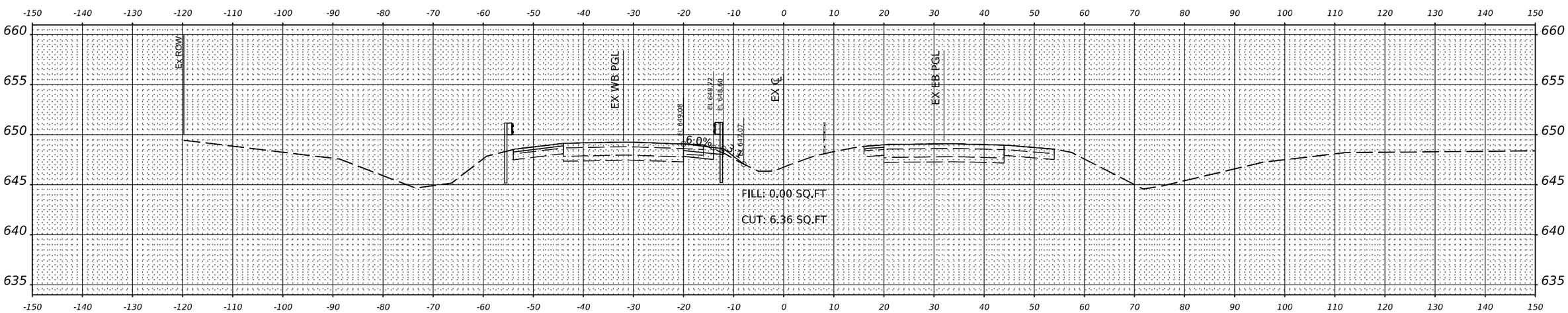

STA 1289+50.00

6/23/2025 10:28:39 AM
P:\Projects\22000\22351C_DESIGN\01_Discipline\a_Civil\WorkingSheets\D5_70D66-ProXS.dgn\dgn

EPSTEIN	USER NAME = asharghi	DESIGNED - CC	REVISED -	STATE OF ILLINOIS DIVISION OF TRANSPORTATION	I-74 OVER STONY CREEK EXISTING CROSS SECTIONS	F.A.I. RTE.	SECTION	COUNTY	TOTAL SHEETS / SHEET NO.
		DRAWN - CC	REVISED -			74	(92-9)BR	VERMILION	87 / 85
	PLOT SCALE = 0.16665441 ' / in.	CHECKED - JRK	REVISED -					CONTRACT NO.	70D66
	PLOT DATE = 6/23/2025	DATE - 05/01/2025	REVISED -		SCALE: SHEET 8 OF 10 SHEETS STA. TO STA.			ILLINOIS FED. AID PROJECT	

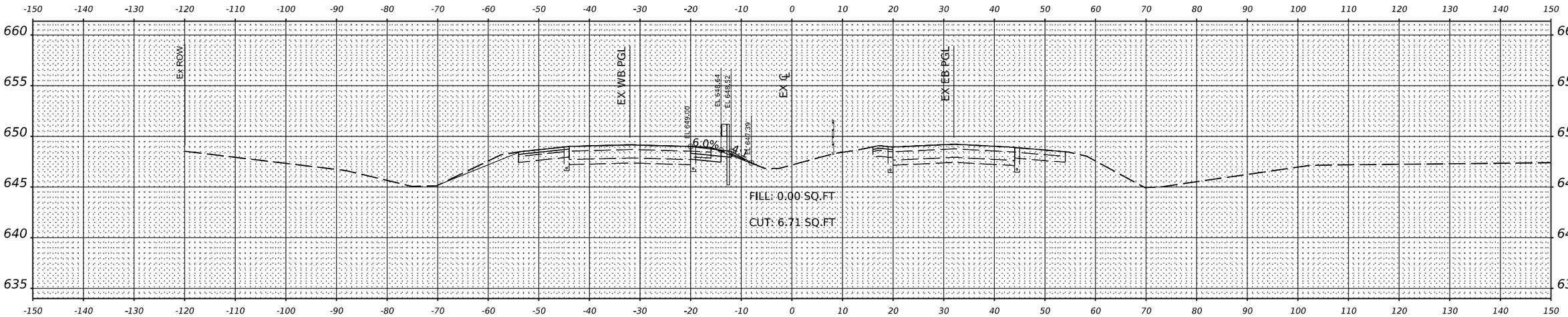

STA 1291+00.00

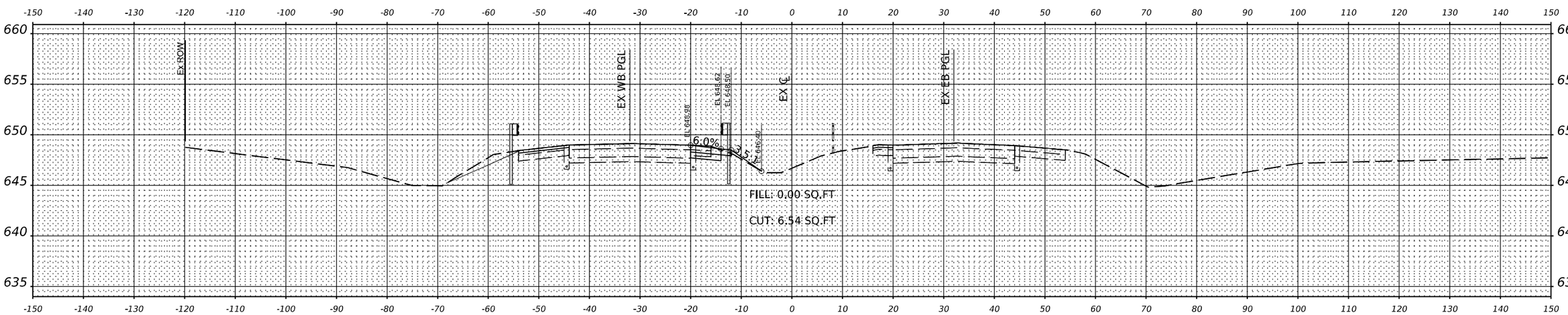

STA 1290+50.00

6/23/2025 10:28:40 AM
P:\Projects\2200\22351C_DESIGN\01_Design\Illinois_Civil\Working\Sheets\D5_70D66-Prop\XS.dgn

EPSTEIN

USER NAME = asharghi	DESIGNED - CC	REVISED -	
	DRAWN - CC	REVISED -	
PLOT SCALE = 0.16665441 ' / in.	CHECKED - JRK	REVISED -	
PLOT DATE = 6/23/2025	DATE - 05/01/2025	REVISED -	

STATE OF ILLINOIS
DIVISION OF TRANSPORTATION

I-74 OVER STONY CREEK
EXISTING CROSS SECTIONS

SCALE: SHEET 9 OF 10 SHEETS STA. TO STA.

F.A.I. RTE.	SECTION	COUNTY	TOTAL SHEETS	SHEET NO.
74	(92-9)BR	VERMILION	87	86
		CONTRACT NO. 70D66		
		ILLINOIS FED. AID PROJECT		

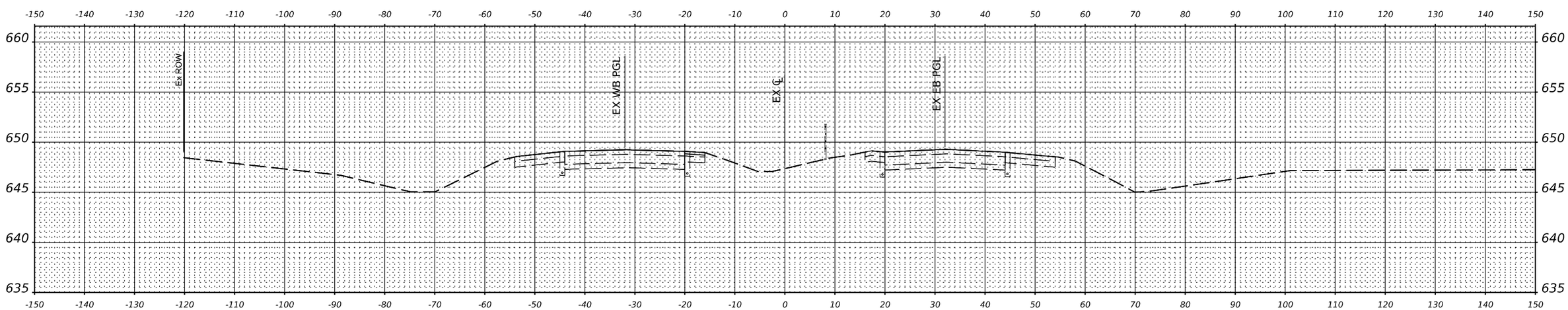

STA 1291+50.00

6/23/2025 10:28:41 AM
P:\Projects\220092235\C_DESIGN\01_Discipline\a_Civil\Working\Sheets\D5_70D66-ProjXS.dgn-dgn

EPSTEIN	USER NAME = asharghi	DESIGNED - CC	REVISED -	STATE OF ILLINOIS DIVISION OF TRANSPORTATION	I-74 OVER STONY CREEK EXISTING CROSS SECTIONS	F.A.I. RTE.	SECTION	COUNTY	TOTAL SHEETS	SHEET NO.
		DRAWN - CC	REVISED -			74	(92-9)BR	VERMILION	87	87
	PLOT SCALE = 0.16665441 ' / in.	CHECKED - JRK	REVISED -					CONTRACT NO. 70D66		
	PLOT DATE = 6/23/2025	DATE - 05/01/2025	REVISED -		SCALE: SHEET 10 OF 10 SHEETS STA. TO STA.			ILLINOIS FED. AID PROJECT		