| Joint Size | "C" at 50°F | "D" at 50°F |
|---|---|---|
| 2" | 2" | 1½" Min. |
| ~~2½"~~ | ~~2½"~~ | ~~1¾" Min.~~ |
| ~~4"~~ | ~~3"~~ | ~~2½" Min.~~ |

## INSTALLATION NOTES

1. Install continuous seal in roadway, parapet, curb, and sidewalk.
2. Install anchor blocks as indicated.

Note A:
Maximum spacing of anchor bolts shall be 12" centers.

## SKEW LIMITATIONS

The details of the anchor blocks and the elastomeric membrane in the parapet, as shown, are for up to 50° skews.

For skews greater than 50°, the anchor blocks and the elastomeric membrane, installed according to dimension "D", might require modifications to insure a minimum clearance of 1½" from centerline of anchor studs to edge of parapet opening. The anchor blocks and the elastomeric membrane shall also be installed to the top of the parapet with the anchor studs spaced at ±12" cts.

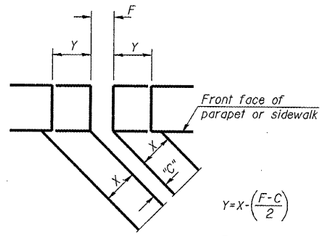


## FORMING BLOCKOUT SKETCH

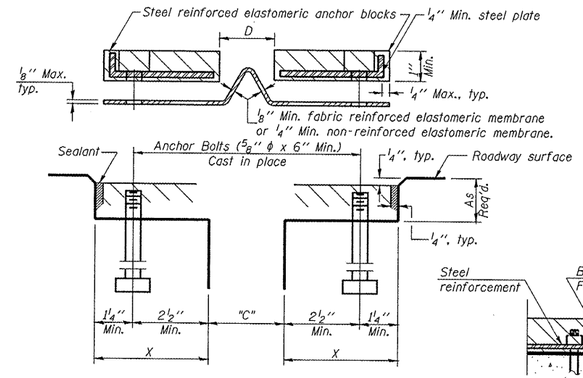


## CROSS SECTION

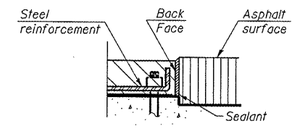


## ANCHOR BLOCK WITH ASPHALT SURFACE

## GENERAL NOTES

Continuous Seal Neoprene Expansion Joint shall consist of molded anchor blocks of elastomer and steel, field assembled over continuous lengths of elastomeric membrane.

The elastomeric membrane shall be premolded with a single or a double upward convolution that will have a "memory" to return to its molded position upon joint closure.

The convolution length shall be such that the extended length will not be greater than the manufactured length when the joint is fully expanded in its design range and will not protrude above the anchor blocks when the joint is fully compressed.

Joint openings shall be adjusted according to Article 503.10(c) of the Standard Specifications when the deck is poured at an ambient temperature other than 50° F.

The parapet and roadway membrane shall be made continuous by an approved vulcanizing process. Lapping will not be permitted.

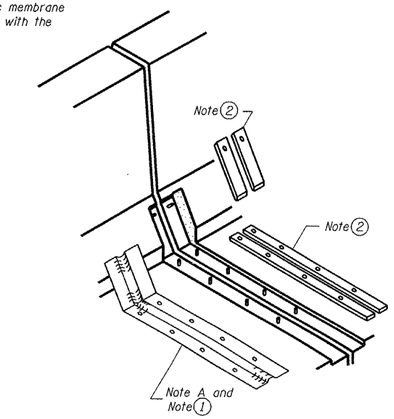


## AT PARAPET

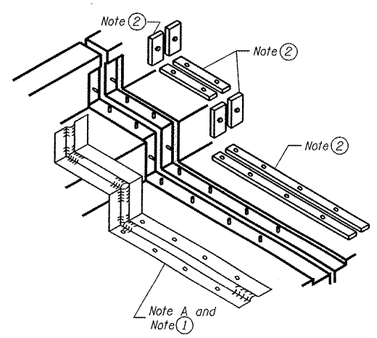


## AT SIDEWALK OR MEDIAN

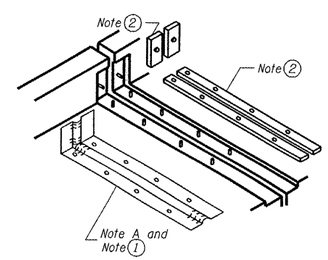


## AT WALL

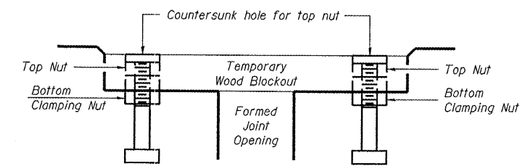


Note:
Stud needs to be threaded lower to allow for use of clamping nut.

Anchor studs should be stainless

## RECOMMENDED BLOCKOUT DETAIL

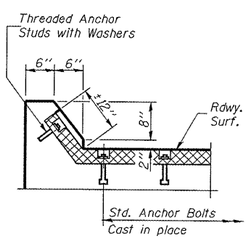


## AT CURB

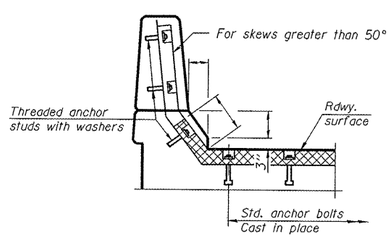


## AT PARAPET

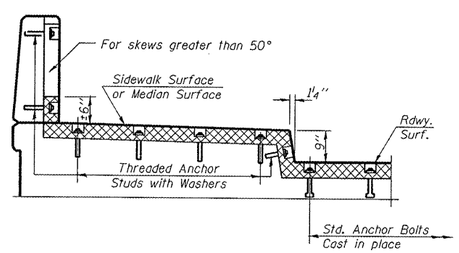


## AT SIDEWALK OR MEDIAN TYPICAL END TREATMENTS

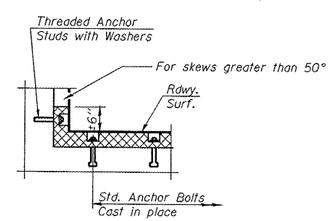


## AT WALL

## CONTINUOUS SEAL TYPE NEOPRENE EXPANSION JOINTS

EJ-CS

10-22-04

⚠ Added Sheet 7-16-08

| | | | |
|---|---|---|---|
| FILE NAME = C:\Projects\d603408\ej-neoprenexpjoint.dgn | USER NAME = loughlnrl | DESIGNED - | REVISED - |
| | PLOT SCALE = 100.0000 ' / IN. | DRAWN - | REVISED - |
| | PLOT DATE = Jul-15-2008 11:49:08AM | CHECKED - | REVISED - |
| | | DATE - | REVISED - |

STATE OF ILLINOIS
DEPARTMENT OF TRANSPORTATION

CONTINUOUS SEAL TYPE
NEOPRENE EXPANSION JOINT

SCALE: | SHEET NO. OF SHEETS | STA. TO STA.

| F.A.P RTE. | SECTION | COUNTY | TOTAL SHEETS | SHEET NO. |
|---|---|---|---|---|
| 315 | 23RS-2 | HANCOCK | 15 | 15A |
| | | CONTRACT NO. 72C31 | | |

FED. ROAD DIST. NO. | ILLINOIS | FED. AID PROJECT