F.A.U. ROUTE NO.	SECTION	COUNTY	TOTAL SHEETS	SHEET NO.
2552	•	DUPAGE	563	367
FED. ROAD DIST. NO.		ILLINOIS	FED. AID PROJECT-	

SHEET NO. - 3

8 - SHEETS

• 00-00114-00-PV CONTRACT NO. 63024

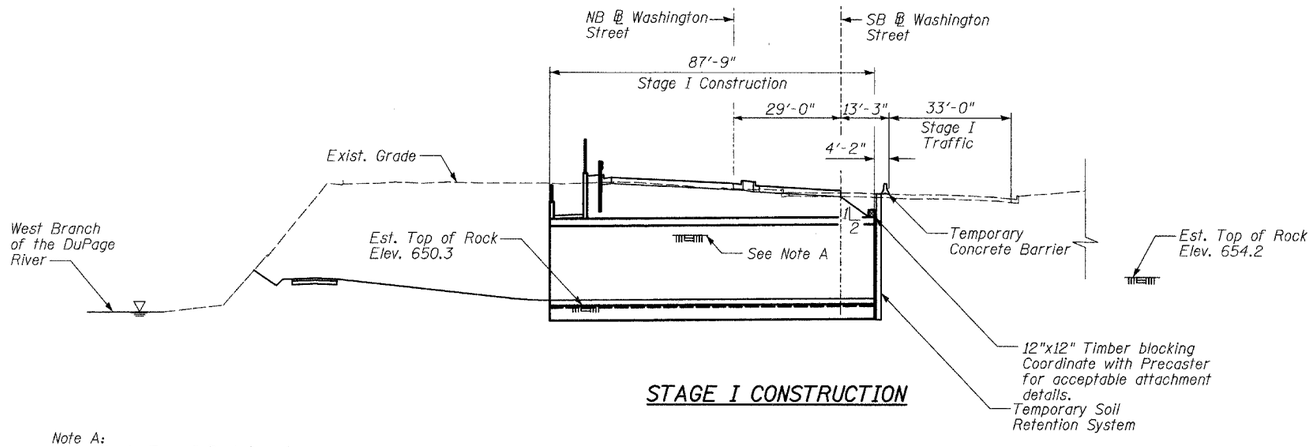

STAGE I CONSTRUCTION

Note A:
Approximate Top of Rock based on Borings done in 2002 by previous gas station facility. Elev. 659.3

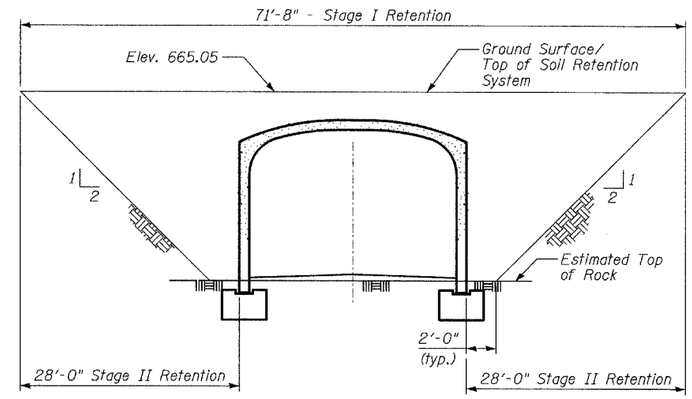

TEMPORARY SOIL RETENTION DETAILS

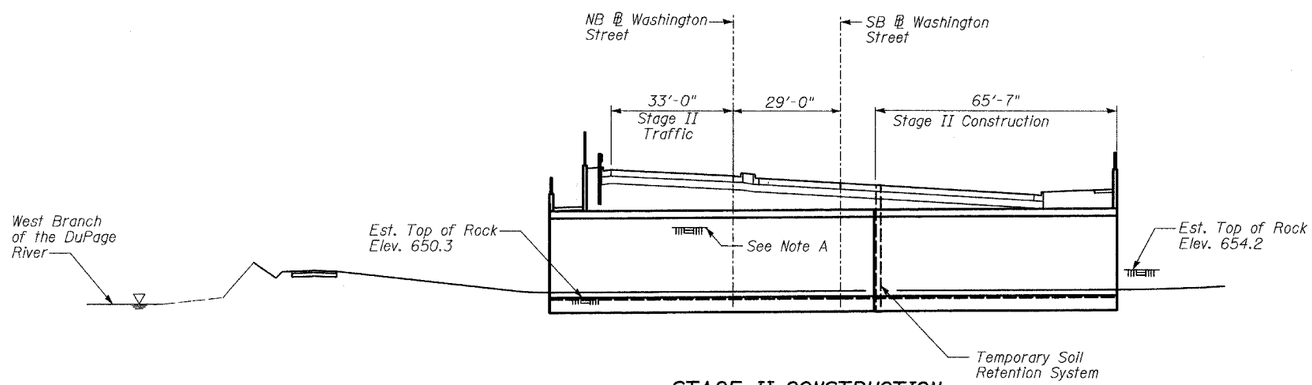

STAGE II CONSTRUCTION

NOTES

A cantilevered sheet piling design does not appear feasible and additional members or other retention systems may be necessary. The Contractor shall submit a temporary soil retention system design including plan details and calculations for review and acceptance by the Engineer.

See Roadway Plans for additional Maintenance of Traffic details.

For quantity and details of Temporary Concrete Barrier, See Roadway plans.

TY·LIN INTERNATIONAL

DESIGNED -	SP
CHECKED -	SP PF
DRAWN -	SP
CHECKED -	SP

REVISIONS	
NAME	DATE

PEDESTRIAN TUNNEL
STAGE CONSTRUCTION

WASHINGTON - 75TH STREET
F.A.U. ROUTE 2552
SECTION 00-00114-00-PV
DUPAGE COUNTY