F.A.I. RTE.	SECTION	COUNTY	TOTAL SHEETS	SHEET NO.
94	2005-068 LS	COOK	58	37
STA. 153+09 (SB I-57) 257+76 (NB I-57)		TO STA. 1214+95 (SB I-94) 2213+00 (NB I-94)		
FED. ROAD DIST. NO.		ILLINOIS	FED. AID PROJECT	

60A74

STATION AND OFFSET CALLOUTS:

A. STA. 155+09.08; OFFSET 104.4LT (SB I-57 ℄)
B. STA. 155+09.11; OFFSET 97.8LT (SB I-57 ℄)
C. STA. 155+67.99; OFFSET 103.1LT (SB I-57 ℄)
D. STA. 155+70.09; OFFSET 101.0LT (SB I-57 ℄)
E. STA. 155+80.59; OFFSET 101.0LT (SB I-57 ℄)
F. STA. 155+80.60; OFFSET 95.7LT (SB I-57 ℄)

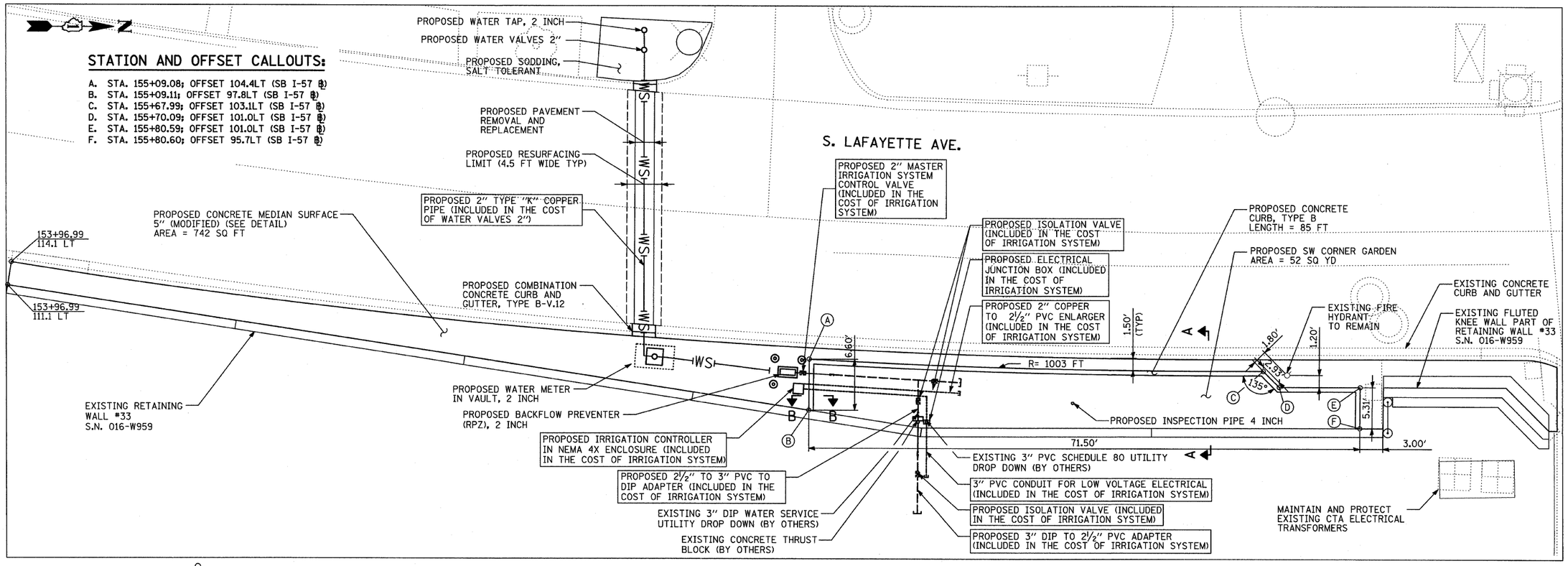

SW CORNER GARDEN AT 95TH STREET

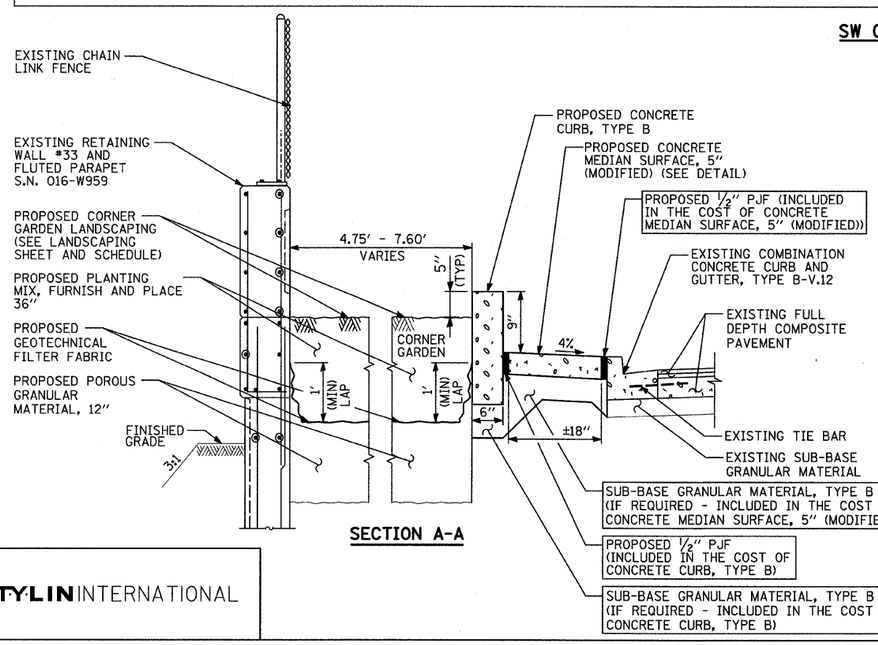

SECTION A-A

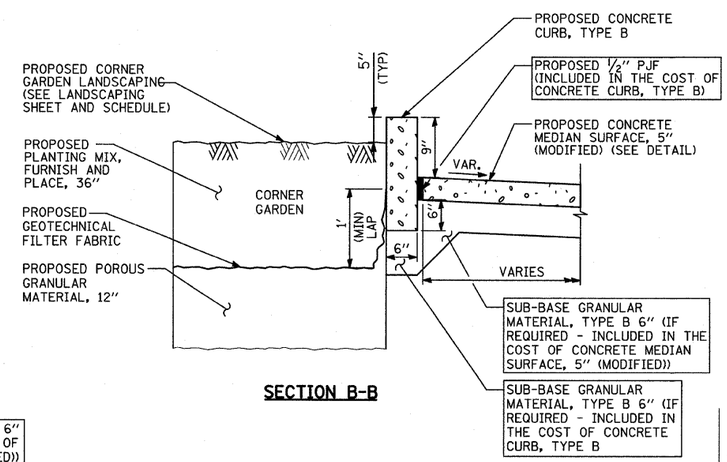

SECTION B-B

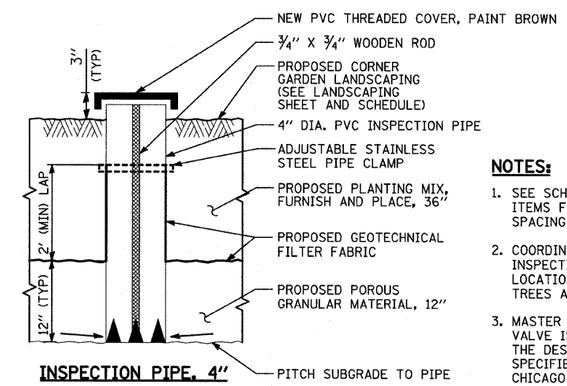

INSPECTION PIPE, 4"

NOTES:

1. SEE SCHEDULE OF LANDSCAPE ITEMS FOR TYPE, SIZE, AND SPACING OF PLANT MATERIAL.
2. COORDINATE PLACEMENT OF INSPECTION PIPE WITH LOCATION OF PROPOSED TREES AND SHRUBS.
3. MASTER IRRIGATION CONTROL VALVE IS TO BE INSTALLED AT THE DESIGNATED LOCATION SPECIFIED BY THE CITY OF CHICAGO DURING CONSTRUCTION AND ON PUBLIC PROPERTY.

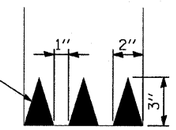

DRAIN SLEEVE ELEVATION

TY·LIN INTERNATIONAL

REVISIONS	
NAME	DATE

ILLINOIS DEPARTMENT OF TRANSPORTATION

F.A.I. 94 (DAN RYAN EXPRESSWAY)

SW CORNER GARDEN DETAIL - 95TH STREET AND LAFAYETTE AVENUE

SCALE: N.T.S. DRAWN BY: JDF
DATE: JUNE 20, 2008 CHECKED BY: JPM

6/20/2008 10:26:57 AM