F.A. RTE.	SECTION	COUNTY	TOTAL SHEETS	SHEET NO.
VAR	D4 GUARDRAIL END SECT REPL 2020	VARIOUS	50	1
	ILLINOIS	CONTRACT NO. 68F57		

INDEX OF SHEETS: 09–18–2020 LETTING ITEM 024

STATE OF ILLINOIS
DEPARTMENT OF TRANSPORTATION

PROPOSED HIGHWAY PLANS

VARIOUS ROUTES
SECTION D4 GUARDRAIL END SEC REPL 2020
PROJECT HSIP–LZGS(841)
TYPE of IMPROVEMENT SAFETY PROJECT
VARIOUS COUNTIES

D–94–047–20

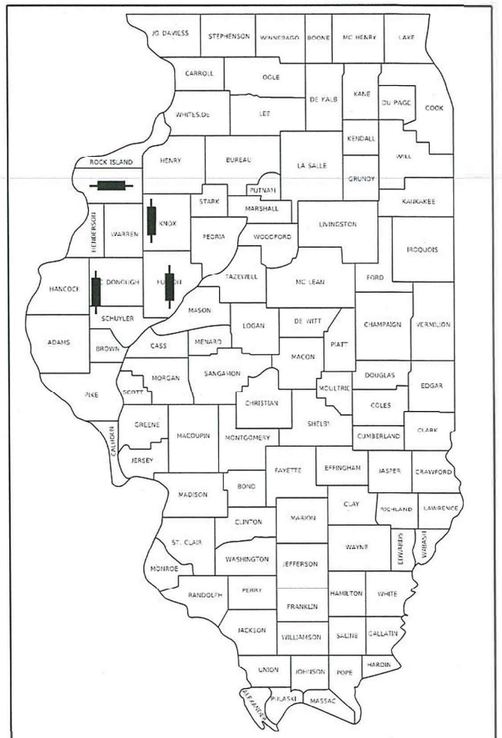

LOCATION OF SECTION INDICATED THUS:–

HIGHWAY STANDARDS

000001–07	701306–04
001006	701901–08
630001–12	725001–01
630301–09	782006–01
701006–05	701201–05

C–94–071–20

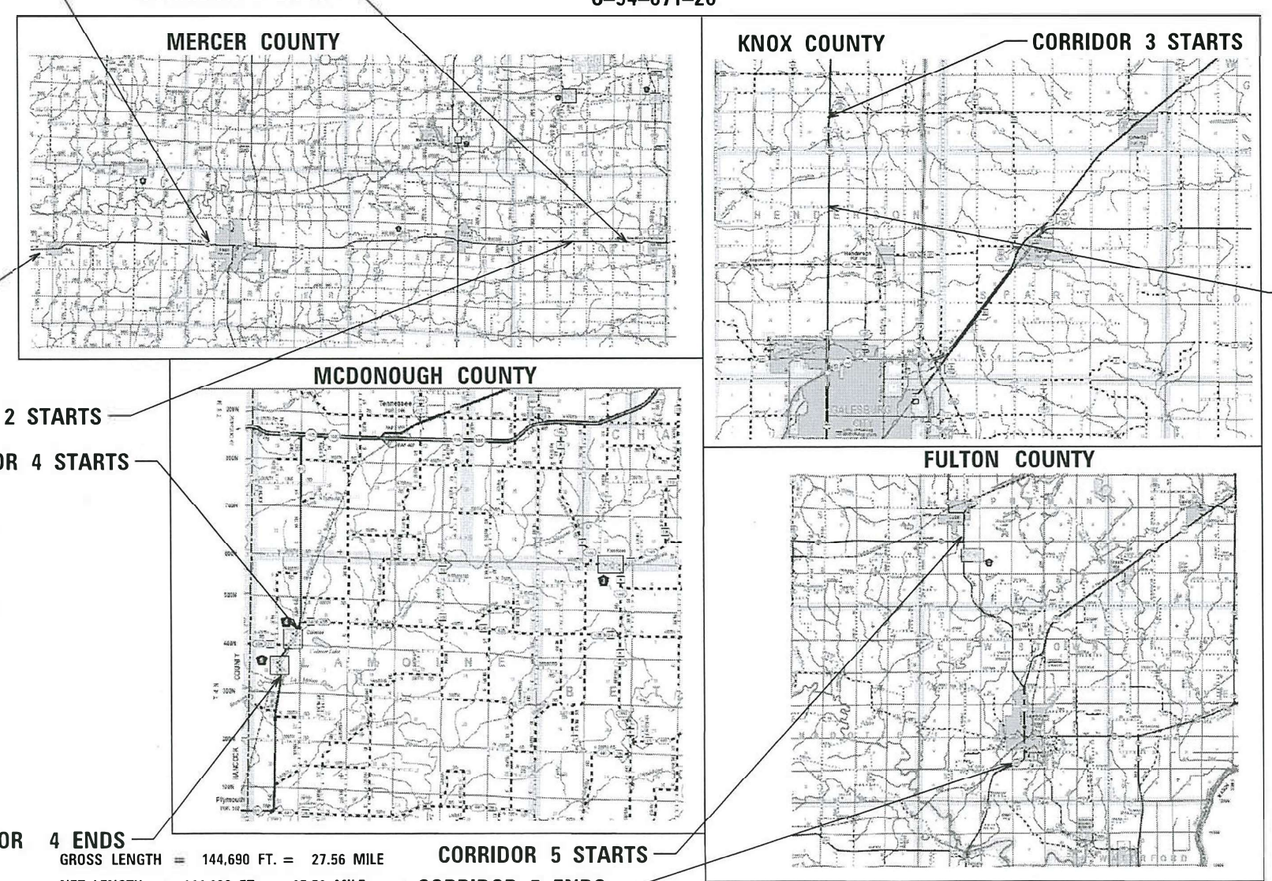

PROJECT SUMMARY: UPGRADE GUARDRAIL TERMINALS END SECTIONS ALONG VARIOUS ROUTES THROUGH DISTRICT 4

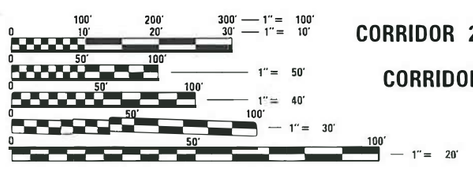

FULL SIZE PLANS HAVE BEEN PREPARED USING STANDARD ENGINEERING SCALES. REDUCED SIZED PLANS WILL NOT CONFORM TO STANDARD SCALES. IN MAKING MEASUREMENTS ON REDUCED PLANS, THE ABOVE SCALES MAY BE USED.

J.U.L.I.E.
JOINT UTILITY LOCATION INFORMATION FOR EXCAVATORS
1–800–892–0123
OR 811

PROJECT ENGINEER: LEONEL CRESPO
PROJECT MANAGER: LEONEL CRESPO

GROSS LENGTH = 144,690 FT. = 27.56 MILE
NET LENGTH = 144,690 FT. = 27.56 MILE

CONTRACT NO. 68F57

STATE OF ILLINOIS
DEPARTMENT OF TRANSPORTATION

SUBMITTED June 26 20 20
Kansil A Garnett P.E.
REGIONAL ENGINEER

August 14, 2020
ENGINEER OF DESIGN AND ENVIRONMENT

August 14, 2020
DIRECTOR OF HIGHWAYS PROJECT IMPLEMENTATION

PRINTED BY THE AUTHORITY OF THE STATE OF ILLINOIS

REV. 7/2/20

COMMITMENTS

No commitments were made.

ENVIRONMENTAL REVIEWS

Prior to the use of any proposed borrow areas, use areas (temporary access roads, detours, run-arounds, etc.) and/or waste areas, the Contractor shall file the required environmental resource request surveys according to Section 107.22 of the Standard Specifications. These surveys are required in order for the Department to conduct cultural and biological resource surveys for the proposed site.

The required environmental resource documentation shall include the following:

* BDE Form 2289 (Cultural and Natural Resources Review of Borrow Areas)
* BDE Form 2290 (Waste/Use Area Review)
* A location map showing the size limits and location of the use area
* Color photographs depicting the use area
* Borrow Area Entry Agreement form - D4 PI0101

Prior to any waste materials being removed from the construction site the required environmental resource surveys shall be obtained and filed by the Contractor. Excess waste products removed from the construction site shall be disposed of as required in Section 202.03 of the Standard Specifications.

Any protruding metal bars shall be removed prior to the disposal of broken concrete at approved disposal sites.

Please note that a minimum of four weeks shall be allowed for the District to obtain the required environmental clearances and six weeks for the required borrow site environmental clearances.

AGGREGATE WEDGE SHOULDER, TYPE B

Aggregate Wedge Shoulder, Type B shall be required for all granular construction of side roads, entrances, and mailbox turnouts, whether or not portions of the surfaces thus constructed are to be covered with a bituminous surface, except where noted differently on the plans.

PROJECT SPECIFIC NOTES

1. THE EXISTING CONDITIONS IN THE PLAN DRAWINGS ARE BASED ON AERIALS PHOTOGRAPHS.
2. EARTH EXCAVATION AND BACKFILL FOR GUARDRAIL SHALL BE INCLUDED IN THE UNIT COST OF THE VARIOUS ITEMS.
3. THE RESIDENT ENGINEER HAS THE AUTHORITY TO FOREGO GUARDRAIL EROSION CONTROL AGGREGATE AT A LOCATION WHERE A CULVERT IS AND A LACK OF FORESLOPE OR EXISTING EROSION CONTROL PROBLEMS ALONG THE SLOPE IS PRESENT.

UTILITY CONFLICTS

COMPANY	ROUTE	LOCATION	TYPE OF UTILITY	TYPE OF CONFLICT	DISPOSITION	CONTACT PERSON
AMEREN	IL 17	CORRIDOR 1: LOCATION 12	ELECTRIC	GUARDRAIL	CONFLICT	
	IL 17	CORRIDOR 1: LOCATION 17	GAS	GUARDRAIL	CAUTION	
	IL 17	CORRIDOR 2	ELECTRIC	GUARDRAIL	CAUTION	
CITY OF CUBA	IL 97	CORRIDOR 5: LOCATIONS 3 & 4	SANITATION PIPES	GUARDRAIL	CAUTION	RICH MASON 309-338-5065
NICOR	IL 17	CORRIDOR 1	10" GAS MAIN	GUARDRAIL	CAUTION	

CODE NO.	ITEM	UNIT	TOTAL QUANTITY	CONSTRUCTION CODE			
				0021	0021	0021	0021
				SAFETY	SAFETY	SAFETY	SAFETY
				90% FED	90% FED	90% FED	90% FED
				10% STATE	10% STATE	10% STATE	10% STATE
				MERCER CO	KNOX CO	MCDONOUGH CO	FULTON CO
48102100	AGGREGATE WEDGE SHOULDER, TYPE B	TON	899	449.1	206	58.3	185.6
63000003	STEEL PLATE BEAM GUARD RAIL, TYPE A, 9 FOOT POSTS	FOOT	1549.7	912.2	362.5	100	175
63100167	TRAFFIC BARRIER TERMINAL, TYPE 1 (SPECIAL) TANGENT	EACH	147	74	31	14	28
63100169	TRAFFIC BARRIER TERMINAL, TYPE 1 (SPECIAL) FLARED	EACH	6	3			3
63200310	GUARDRAIL REMOVAL	FOOT	5937.5	3150	1137.5	575	1075
67100100	MOBILIZATION	L SUM	1	0.4	0.2	0.2	0.2
70100450	TRAFFIC CONTROL AND PROTECTION, STANDARD 701201	L SUM	1	0.4	0.2	0.2	0.2
70100460	TRAFFIC CONTROL AND PROTECTION, STANDARD 701306	L SUM	1	0.4	0.2	0.2	0.2
72501000	TERMINAL MARKER - DIRECT APPLIED	EACH	153	77	31	14	31
78200005	GUARDRAIL REFLECTORS, TYPE A	EACH	88	48	20	8	12
Z0001002	GUARDRAIL AGGREGATE EROSION CONTROL	TON	2740.9	1350.1	595	222.6	573.2

LOCATION	STATIONING				48102100	Z0001002
					Aggregate Wedge Shoulder, Type B	Guardrail Aggregate Erosion Control
CORRIDOR #1	LT/RT	STA.	TO	STA.	TON	TON
Location 1	RT	294+09.62	TO	294+67.52	5.57	14.17
	RT	294+80.17	TO	295+34.66	2.27	13.85
	LT	298+27.70	TO	299+37.73	6.49	13.24
	RT	298+53.67	TO	299+67.79	3.93	15.85
Location 2	RT	304+53.15	TO	305+14.93	0	17.27
	LT	304+81.26	TO	305+39.72	2.81	11.62
	RT	306+36.22	TO	307+33.06	2.72	12.16
	LT	308+54.19	TO	309+70.54	6.46	14.92
Location 3	LT	319+88.69	TO	321+04.71	6.81	13.94
	RT	320+14.65	TO	321+04.70	2.57	13.87
	RT	322+25.69	TO	323+21.55	2.32	13.89
	LT	322+25.71	TO	323+46.65	8.06	13.89
Location 4	RT	333+28.07	TO	334+37.80	5.12	13.79
	LT	333+40.75	TO	334+58.18	6.73	13.95
	RT	335+59.24	TO	336+64.78	5.12	13.33
	LT	335+91.36	TO	336+98.46	4.09	14.24
Location 5	LT	339+05.56	TO	340+19.56	5.57	14.2
	RT	339+18.08	TO	340+27.46	5.34	14.08
	RT	341+74.00	TO	342+84.43	6.03	13.85
	LT	342+02.43	TO	343+11.50	4.8	13.88
Location 6	RT	344+78.08	TO	347+31.15	8.96	39.79
	LT	345+75.94	TO	347+93.64	9.3	40.04
Location 7	LT	353+72.31	TO	354+93.77	8.2	13.94
	LT	356+39.77	TO	356+91.77	5.63	13.95
Location 8	RT	362+40.30	TO	364+05.07	7.78	20.06
Location 9	LT	368+75.03	TO	369+88.60	6.2	13.95
	RT	370+98.26	TO	371+48.26	4.1	13.95
Location 10	RT	377+73.60	TO	379+14.05	7.88	19.39
	LT	378+47.83	TO	381+56.78	12.03	52.31
	RT	380+36.05	TO	381+42.66	4.75	13.69
Location 11	RT	418+82.13	TO	419+70.46	9.4	13.99
	LT	418+98.05	TO	419+89.37	3.04	13.95
	RT	420+64.46	TO	422+11.10	12.4	13.95
	LT	421+12.77	TO	421+80.14	2.72	13.95
Location 12	LT	428+88.26	TO	430+19.21	7.81	13.93
	RT	428+90.34	TO	431+35.90	11.5	39.55
	LT	431+37.98	TO	432+97.20	8.57	13.95
Location 13	LT	434+30.41	TO	435+64.97	6.31	13.95
	RT	435+21.89	TO	438+02.58	16.14	42.85
	LT	437+84.36	TO	438+96.05	5.74	13.95
Location 14	RT	439+58.75	TO	442+12.25	11.81	35.75
	LT	441+80.66	TO	442+94.37	6.02	13.95
Location 15	RT	531+85.73	TO	532+45.83	0	17.06
Location 16	LT	547+93.58	TO	551+09.60	14.4	52.31
	RT	548+32.23	TO	550+98.23	12.46	39.59
Location 17	LT	643+05.76	TO	645+96.76	13.43	45.95
	RT	645+33.67	TO	646+43.67	5.34	13.95
Location 18	RT	657+75.74	TO	660+41.70	12.46	39.59
	LT	659+24.12	TO	660+40.12	6.8	13.31
TOTAL					333.99	986.54

LOCATION	STATIONING				63100167
					Traffic Barrier Terminal, Ty 1 (Special) Tangent
CORRIDOR #1	LT/RT	STA.	TO	STA.	EACH
Location 1	LT	298+27.70	TO	298+77.70	1
	RT	298+59.60	TO	299+09.42	1
Location 2	RT	304+64.93	TO	305+14.93	1
	LT	304+89.72	TO	305+39.72	1
	RT	306+36.22	TO	306+86.22	1
	LT	309+60.46	TO	309+10.46	1
Location 3	RT	320+52.70	TO	321+02.70	1
	LT	320+52.71	TO	321+02.71	1
	RT	322+27.69	TO	322+77.69	1
	LT	322+27.78	TO	322+77.78	1
Location 4	RT	333+85.80	TO	334+35.80	1
	LT	334+06.18	TO	334+56.18	1
	RT	335+61.41	TO	336+11.41	1
	LT	335+93.36	TO	336+43.36	1
Location 5	LT	339+67.56	TO	340+17.56	1
	RT	339+75.46	TO	340+25.46	1
	RT	341+76.00	TO	342+26.00	1
	LT	342+04.43	TO	342+54.43	1
Location 6	RT	345+29.48	TO	345+79.48	1
	LT	345+85.00	TO	346+35.00	1
	RT	346+29.48	TO	346+79.48	1
	LT	346+85.00	TO	347+35.00	1
Location 7	LT	354+41.77	TO	354+91.77	1
	LT	356+41.77	TO	356+91.77	1
Location 8	RT	362+67.30	TO	363+17.30	1
Location 9	LT	369+36.60	TO	369+86.60	1
	RT	370+98.26	TO	371+48.26	1
Location 10	RT	378+37.05	TO	378+87.05	1
	LT	379+03.21	TO	379+53.21	1
	RT	380+38.05	TO	380+87.05	1
	LT	380+53.21	TO	381+03.21	1
Location 11	RT	419+18.46	TO	419+68.46	1
	LT	419+37.37	TO	419+87.37	1
	RT	420+66.46	TO	421+15.51	1
	LT	421+14.77	TO	421+64.77	1
Location 12	LT	429+68.02	TO	430+17.21	1
	RT	429+38.96	TO	429+89.74	1
	RT	430+40.89	TO	430+91.67	1
	LT	431+39.98	TO	431+89.14	1
Location 13	LT	435+13.72	TO	435+62.97	1
	RT	435+72.50	TO	436+23.32	1
	RT	436+87.30	TO	437+37.30	1
	LT	437+86.36	TO	438+36.36	1
Location 14	RT	440+16.75	TO	440+66.75	1
	RT	441+04.25	TO	441+54.25	1
	LT	441+82.66	TO	442+32.66	1
Location 15	RT	531+85.73	TO	532+35.73	1
Location 16	LT	548+51.60	TO	549+01.60	1
	RT	548+90.21	TO	549+40.21	1
	RT	549+90.21	TO	550+40.21	1
	LT	550+01.60	TO	550+51.60	1
Location 17	LT	643+63.76	TO	644+13.76	1
	LT	644+88.76	TO	645+38.76	1
	RT	645+35.67	TO	645+85.67	1
Location 18	RT	658+33.73	TO	658+83.73	1
	LT	659+26.12	TO	659+76.12	1
	RT	659+33.73	TO	659+83.73	1
TOTAL					57

MODEL: $MODELNAME$
FILE NAME: $FILE$

USER NAME = $USER$	DESIGNED -	REVISED -
	DRAWN -	REVISED -
PLOT SCALE = $SCALE$	CHECKED -	REVISED -
PLOT DATE = $DATE$	DATE -	REVISED -

STATE OF ILLINOIS
DEPARTMENT OF TRANSPORTATION

QUANTITY SCHEDULES

SCALE: SHEET OF SHEETS STA. TO STA.

F.A. RTE.	SECTION	COUNTY	TOTAL SHEETS	SHEET NO.
VAR	D4 GUARDRAIL END SECT REPL 2020	VARIOUS	50	4

CONTRACT NO. 68F57

ILLINOIS FED. AID PROJECT

LOCATION	STATIONING		72501000 Terminal Markers-Direct Applied
CORRIDOR #1	LT/RT	STA.	EACH
Location 1	RT	294+59.62	1
	RT	294+84.66	1
	LT	298+77.70	1
	RT	299+09.42	1
Location 2	RT	304+64.93	1
	LT	304+89.72	1
	RT	306+86.22	1
	LT	309+10.46	1
Location 3	RT	320+52.70	1
	LT	320+52.71	1
	RT	322+77.69	1
	LT	322+77.78	1
Location 4	RT	333+85.80	1
	LT	334+06.18	1
	RT	336+11.41	1
	LT	336+43.36	1
Location 5	LT	339+67.56	1
	RT	339+75.46	1
	RT	342+26.00	1
	LT	342+54.43	1
Location 6	RT	345+29.48	1
	LT	345+85.00	1
	RT	346+79.48	1
	LT	347+35.00	1
Location 7	LT	354+41.77	1
	LT	356+91.77	1
Location 8	RT	363+17.30	1
Location 9	LT	369+36.60	1
	RT	371+48.26	1
Location 10	RT	378+37.05	1
	LT	379+03.21	1
	RT	380+87.05	1
	LT	381+03.21	1
Location 11	RT	419+18.46	1
	LT	419+37.37	1
	RT	421+15.51	1
	LT	421+64.77	1
Location 12	RT	429+38.96	1
	LT	429+68.02	1
	LT	431+89.14	1
	RT	430+91.67	1
Location 13	LT	435+13.72	1
	RT	435+72.50	1
	RT	437+37.30	1
	LT	438+36.36	1
Location 14	RT	440+16.75	1
	RT	441+54.25	1
	LT	442+32.66	1
Location 15	RT	532+35.73	1
Location 16	LT	548+51.60	1
	RT	548+90.21	1
	RT	550+40.21	1
	LT	550+51.60	1
Location 17	RT	643+63.76	1
	RT	645+38.76	1
	LT	645+85.67	1
Location 18	RT	658+33.73	1
	LT	659+76.12	1
	RT	659+83.73	1
TOTAL			58

LOCATION	STATIONING				63200310 Guardrail Removal
CORRIDOR #1	LT/RT	STA.	TO	STA.	FOOT
Location 1	RT	294+09.62	TO	294+59.62	50
	RT	294+84.66	TO	295+34.66	50
	LT	298+27.70	TO	298+52.70	25
	RT	298+59.60	TO	298+84.47	25
Location 2	RT	304+64.93	TO	305+14.93	50
	LT	304+89.72	TO	305+39.72	50
	RT	306+36.22	TO	306+61.22	25
	LT	308+60.46	TO	308+85.46	25
Location 3	RT	320+77.70	TO	321+02.70	25
	LT	320+77.71	TO	321+02.71	25
	RT	322+27.69	TO	322+52.69	25
	LT	322+27.78	TO	322+52.71	25
Location 4	RT	334+10.88	TO	334+35.80	25
	LT	334+31.28	TO	334+56.18	25
	RT	335+61.41	TO	335+86.50	25
	LT	335+93.36	TO	336+18.36	25
Location 5	LT	341+92.48	TO	340+17.56	25
	RT	340+00.37	TO	340+25.46	25
	RT	341+76.00	TO	342+01.06	25
	LT	342+04.43	TO	342+29.34	25
Location 6	RT	345+54.48	TO	346+54.85	100
	LT	346+10.00	TO	347+10.00	100
Location 7	LT	354+66.77	TO	354+91.77	25
	LT	356+41.77	TO	356+66.77	25
Location 8	RT	362+42.30	TO	362+92.30	50
Location 9	LT	369+61.60	TO	369+86.60	25
	RT	370+98.26	TO	371+26.26	25
Location 10	RT	378+62.05	TO	379+12.05	50
	LT	379+28.21	TO	380+78.21	150
	RT	380+38.05	TO	380+62.05	25
Location 11	RT	419+42.98	TO	419+68.46	25
	LT	419+62.73	TO	419+87.37	25
	RT	420+66.46	TO	420+90.95	25
	LT	421+14.77	TO	421+64.77	50
Location 12	LT	429+92.56	TO	430+17.21	25
	RT	429+64.36	TO	430+66.27	100
	LT	431+39.98	TO	431+64.54	25
Location 13	LT	435+38.35	TO	435+62.97	25
	RT	435+98.25	TO	437+12.56	112.5
	LT	437+86.36	TO	438+11.36	25
Location 14	RT	440+16.75	TO	441+54.25	137.5
	LT	441+82.66	TO	442+07.66	25
Location 15	RT	531+85.73	TO	532+35.73	50
Location 16	LT	548+76.60	TO	550+26.60	150
	RT	548+90.21	TO	550+40.21	150
Location 17	LT	643+88.76	TO	645+38.76	150
	RT	645+35.67	TO	645+60.67	25
Location 18	RT	658+58.73	TO	659+58.73	100
	LT	659+26.12	TO	659+76.12	50
TOTAL					2450

LOCATION	STATIONING				63100169 Traffic Barrier Terminal, Ty 1 (Special) Flared
CORRIDOR #1	LT/RT	STA.	TO	STA.	EACH
Location 1	RT	294+09.62	TO	294+59.62	1
	RT	294+84.66	TO	295+34.66	1
TOTAL					2

LOCATION	STATIONING				63000003 Steel Plate Beam Guardrail, Ty A, 9ft.
CORRIDOR #1	LT/RT	STA.	TO	STA.	FOOT
Location 6	RT	345+79.48	TO	346+29.48	50
	LT	346+35.00	TO	346+85.00	50
Location 8	RT	362+42.30	TO	362+67.30	25
Location 10	LT	379+53.21	TO	380+53.21	100
Location 12	RT	429+89.74	TO	430+40.89	50
Location 13	RT	436+23.32	TO	436+87.30	62.5
Location 14	RT	440+66.75	TO	441+04.25	37.5
Location 16	LT	549+01.60	TO	550+01.60	100
	RT	549+40.21	TO	549+90.21	50
Location 17	LT	644+13.76	TO	644+88.76	75
Location 18	RT	658+83.73	TO	659+33.73	50
TOTAL					650

LOCATION	STATIONING				78200005 Guardrail Reflectors, Type A
CORRIDOR #1	LT/RT	STA.	TO	STA.	EACH
Location 6	RT	345+29.48	TO	346+79.48	4
	LT	345+85.00	TO	347+35.00	4
Location 10	LT	379+03.21	TO	381+03.21	4
Location 12	RT	429+38.96	TO	430+91.67	4
Location 13	RT	435+72.50	TO	437+37.30	4
Location 14	RT	440+16.75	TO	441+54.25	4
Location 16	LT	548+51.60	TO	550+51.60	4
	RT	548+90.21	TO	550+40.21	4
Location 17	LT	643+63.76	TO	645+38.76	4
Location 18	RT	658+33.73	TO	659+83.73	4
TOTAL					40

LOCATION	STATIONING				63100167 Traffic Barrier Terminal, Ty 1 (Special) Tangent
CORRIDOR #2	LT/RT	STA.	TO	STA.	EACH
Location 1	RT	1320+53.87	TO	1321+53.87	1
	RT	1322+91.45	TO	1323+92.45	1
Location 2	RT	1370+53.59	TO	1372+39.33	2
Location 3	RT	1377+33.15	TO	1378+05.40	1
	RT	1378+74.51	TO	1379+75.51	1
Location 4	RT	1399+21.42	TO	1400+22.42	1
	LT	1399+20.23	TO	1400+21.23	1
	RT	1401+06.82	TO	1402+07.82	1
	LT	1401+13.04	TO	1402+14.04	1
Location 6	RT	1422+58.57	TO	1423+59.57	1
	LT	1422+83.13	TO	1423+84.13	1
	RT	1425+11.73	TO	1426+12.73	1
	LT	1425+16.76	TO	1426+17.72	1
Location 7	RT	1427+78.70	TO	1432+06.20	2
Location 8	LT	1432+54.97	TO	1433+55.57	1
TOTAL					17

MODEL: $MODELNAME$
FILE NAME: $FILE$

USER NAME = $USER$	DESIGNED -	REVISED -
	DRAWN -	REVISED -
PLOT SCALE = $SCALE$	CHECKED -	REVISED -
PLOT DATE = $DATE$	DATE -	REVISED -

STATE OF ILLINOIS
DEPARTMENT OF TRANSPORTATION

QUANTITY SCHEDULES

SCALE: | SHEET OF SHEETS | STA. TO STA.

F.A. RTE.	SECTION	COUNTY	TOTAL SHEETS	SHEET NO.
VAR	D4 GUARDRAIL END SECT REPL 2020	VARIOUS	50	5
		CONTRACT NO. 68F57		
		ILLINOIS	FED. AID PROJECT	

LOCATION	STATIONING				63100169 Traffic Barrier Terminal, Ty 1 (Special) Flared
CORRIDOR #2	LT/RT	STA.	TO	STA.	EACH
Location 5	RT	1409+02.84	TO	1410+03.84	1
TOTAL					1

LOCATION	STATIONING				63200310 Guardrail Removal
CORRIDOR #2	LT/RT	STA.	TO	STA.	FOOT
Location 1	RT	1321+22.87	TO	1321+47.87	25
	RT	1322+97.45	TO	1323+22.45	25
Location 2	RT	1370+69.33	TO	1371+69.33	100
Location 3	RT	1377+49.40	TO	1377+99.40	50
	RT	1378+80.51	TO	1378+05.51	25
Location 4	RT	1399+91.42	TO	1400+16.42	25
	LT	1399+90.23	TO	1400+15.23	25
	RT	1401+12.82	TO	1401+37.82	25
	LT	1401+19.04	TO	1401+44.04	25
Location 5	RT	1409+72.84	TO	1409+97.84	25
Location 6	RT	1423+03.57	TO	1423+28.57	25
	LT	1423+53.18	TO	1423+78.13	25
	RT	1425+17.73	TO	1425+42.73	25
	LT	1425+22.76	TO	1425+47.76	25
Location 7	RT	1428+48.70	TO	1431+36.20	225
Location 8	LT	1432+60.97	TO	1432+85.97	25
TOTAL					700

LOCATION	STATIONING				63000003 Steel Plate Beam Guardrail, Ty A, 9ft.
CORRIDOR #2	LT/RT	STA.	TO	STA.	FOOT
Location 2	RT	1371+19.43	TO	1371+44.33	25
Location 7	RT	1428+73.70	TO	1431+11.20	237.5
TOTAL					262.5

LOCATION	STATIONING				48102100 Aggregate Wedge Shoulder, Type B	Z0001002 Guardrail Aggregate Erosion Control
CORRIDOR #2	LT/RT	STA.	TO	STA.	TON	TON
Location 1	RT	1320+53.87	TO	1321+53.87	6.8	16.7
	RT	1322+91.45	TO	1323+92.45	6.9	16.7
Location 2	RT	1370+53.59	TO	1372+39.33	7.1	37.1
Location 3	RT	1377+33.15	TO	1378+05.40	4.6	16.7
	RT	1378+74.51	TO	1379+75.51	4.8	16.7
Location 4	RT	1399+21.42	TO	1400+22.42	6.8	16.7
	LT	1399+20.23	TO	1400+21.23	5.7	16.7
	RT	1401+06.82	TO	1402+07.82	6.8	16.7
	LT	1401+13.04	TO	1402+14.04	5.8	16.7
Location 5	RT	1409+02.84	TO	1410+03.84	8.6	16.7
Location 6	RT	1422+58.57	TO	1423+59.57	6.8	16.7
	LT	1422+83.13	TO	1423+84.13	6.4	16.7
	RT	1425+11.73	TO	1426+12.73	6.9	16.7
	LT	1425+16.76	TO	1426+17.72	6.4	16.7
Location 7	RT	1427+78.70	TO	1432+06.20	20.5	92.7
Location 8	LT	1432+54.97	TO	1433+55.57	4.2	16.7
TOTAL					115.1	363.6

LOCATION	STATIONING				72501000 Terminal Markers-Direct Applied
CORRIDOR #2	LT/RT			STA.	EACH
Location 1	RT	1320+53.87	TO	1321+53.87	1
	RT	1322+91.45	TO	1323+92.45	1
Location 2	RT	1370+53.59	TO	1372+39.33	2
Location 3	RT	1377+33.15	TO	1378+05.40	1
	RT	1378+74.51	TO	1379+75.51	1
Location 4	RT	1399+21.42	TO	1400+22.42	1
	LT	1399+20.23	TO	1400+21.23	1
	RT	1401+06.82	TO	1402+07.82	1
	LT	1401+13.04	TO	1402+14.04	1
Location 5	RT	1409+02.84	TO	1410+03.84	1
Location 6	RT	1422+58.57	TO	1423+59.57	1
	LT	1422+83.13	TO	1423+84.13	1
	RT	1425+11.73	TO	1426+12.73	1
	LT	1425+16.76	TO	1426+17.72	1
Location 7	RT	1427+78.70	TO	1432+06.20	2
Location 8	LT	1432+54.97	TO	1433+55.57	1
TOTAL					18

LOCATION	STATIONING				63000003 Steel Plate Beam Guardrail, Ty A, 9ft.
CORRIDOR #3	LT/RT	STA.	TO	STA.	FOOT
Location 1	RT	131+02.43	TO	131+77.43	75
Location 3	RT	165+83.25	TO	164+58.25	75
Location 7	LT	261+92.32	TO	262+42.32	50
	RT	261+68.79	TO	262+18.79	50
Location 8	RT	290+72.94	TO	291+60.44	87.5
Location 9	LT	346+41.36	TO	346+66.36	25
TOTAL					362.5

LOCATION	STATIONING				78200005 Guardrail Reflectors, Type A
CORRIDOR #2	LT/RT	STA.	TO	STA.	EACH
Location 2	RT	1370+69.33	TO	1371+69.33	4
Location 7	RT	1428+48.70	TO	1431+36.20	4
TOTAL					8

MODEL: $MODELNAME$
FILE NAME: $FILEL$

USER NAME = $USER$	DESIGNED -	REVISED -	STATE OF ILLINOIS DEPARTMENT OF TRANSPORTATION
	DRAWN -	REVISED -	
PLOT SCALE = $SCALE$	CHECKED -	REVISED -	
PLOT DATE = $DATE$	DATE -	REVISED -	

QUANTITY SCHEDULES

SCALE: SHEET OF SHEETS STA. TO STA.

F.A. RTE.	SECTION	COUNTY	TOTAL SHEETS	SHEET NO.
VAR	D4 GUARDRAIL END SECT REPL 2020	VARIOUS	50	6
		CONTRACT NO. 68F57		
	ILLINOIS	FED. AID PROJECT		

LOCATION	STATIONING				48102100	Z0001002
					Aggregate Wedge Shoulder, Type B	Guardrail Aggregate Erosion Control
CORRIDOR #3	LT/RT	STA.	TO	STA.	TON	TON
Location 1	LT	126+75.30	TO	127+76.30	3.6	16.7
	LT	131+90.73	TO	132+91.73	5	16.7
	RT	130+07.43	TO	132+72.73	13.3	49.4
Location 2	RT	162+88.25	TO	165+53.25	21.7	49.4
Location 3	RT	174+58.40	TO	175+59.40	8.9	16.7
	RT	178+70.70	TO	179+71.70	5.2	16.7
Location 4	RT	200+65.98	TO	201+66.98	6	16.7
	LT	200+78.91	TO	201+79.91	7.7	16.7
	RT	203+56.55	TO	200+57.55	6.6	16.7
	LT	203+49.30	TO	204+49.30	8	16.7
Location 5	LT	215+98.67	TO	216+99.67	6.1	16.7
	RT	215+47.89	TO	216+48.89	5.2	16.7
	RT	218+61.58	TO	219+62.78	4.5	16.7
	LT	218+14.79	TO	219+15.79	6.1	16.7
Location 6	RT	251+03.65	TO	252+04.65	6.4	16.7
	LT	251+21.20	TO	252+21.20	8.2	16.7
	RT	253+42.35	TO	254+43.35	6.4	16.7
	LT	253+10.81	TO	254+11.81	7.2	16.7
Location 7	LT	260+97.32	TO	263+37.32	10.2	43.1
	RT	260+73.79	TO	263+13.79	14.4	43.1
Location 8	RT	289+77.94	TO	292+55.44	6	52.6
	LT	289+72.32	TO	290+73.32	14.3	16.7
Location 9	LT	340+70.92	TO	341+71.92	8.3	16.7
	RT	340+74.58	TO	341+75.58	4.4	16.7
	LT	346+35.36	TO	347+61.36	8	23.4
	RT	346+35.03	TO	347+36.03	4.3	16.7
TOTAL					206	595

LOCATION	STATIONING				63100167
					Traffic Barrier Terminal, Ty 1 (Special) Tangent
CORRIDOR #3	LT/RT	STA.	TO	STA.	EACH
Location 1	LT	126+75.30	TO	127+76.30	1
	LT	131+90.73	TO	132+91.73	1
	RT	130+07.43	TO	132+72.73	2
Location 2	RT	162+88.25	TO	165+53.25	2
Location 3	RT	174+58.40	TO	175+59.40	1
	RT	178+70.70	TO	179+71.70	1
Location 4	RT	200+65.98	TO	201+66.98	1
	LT	200+78.91	TO	201+79.91	1
	RT	203+56.55	TO	200+57.55	1
	LT	203+49.30	TO	204+49.30	1
Location 5	LT	215+98.67	TO	216+99.67	1
	RT	215+47.89	TO	216+48.89	1
	RT	218+61.58	TO	219+62.78	1
	LT	218+14.79	TO	219+15.79	1
Location 6	RT	251+03.65	TO	252+04.65	1
	LT	251+21.20	TO	252+21.20	1
	RT	253+42.35	TO	254+43.35	1
	LT	253+10.81	TO	254+11.81	1
Location 7	LT	260+97.32	TO	263+37.32	2
	RT	260+73.79	TO	263+13.79	2
Location 8	RT	289+77.94	TO	292+55.44	2
	LT	289+72.32	TO	290+73.32	1
Location 9	LT	340+70.92	TO	341+71.92	1
	RT	340+74.58	TO	341+75.58	1
	LT	346+35.36	TO	347+61.36	1
	RT	346+35.03	TO	347+36.03	1
TOTAL					31

LOCATION	STATIONING				63200310
					Guardrail Removal
CORRIDOR #3	LT/RT	STA.	TO	STA.	FOOT
Location 1	LT	127+45.30	TO	127+70.30	25
	LT	131+96.73	TO	132+21.73	25
	RT	130+77.43	TO	132+02.73	125
Location 2	RT	163+58.25	TO	164+83.25	125
Location 3	RT	175+28.40	TO	175+53.04	25
	RT	178+76.70	TO	179+26.70	50
Location 4	RT	201+35.98	TO	201+60.98	25
	LT	201+48.91	TO	201+73.91	25
	RT	203+62.55	TO	203+87.55	25
	LT	203+54.30	TO	203+79.30	25
Location 5	LT	216+68.67	TO	216+93.67	25
	RT	216+17.89	TO	216+42.89	25
	RT	218+67.58	TO	218+92.58	25
	LT	218+20.79	TO	218+45.79	25
Location 6	RT	251+73.65	TO	251+98.65	25
	LT	251+90.20	TO	252+15.20	25
	RT	253+48.35	TO	253+73.35	25
	LT	253+16.81	TO	253+41.81	25
Location 7	LT	261+67.32	TO	262+67.32	100
	RT	261+43.79	TO	262+43.79	100
Location 8	RT	290+47.94	TO	291+85.44	137.5
	LT	290+42.32	TO	290+67.32	25
Location 9	LT	341+40.92	TO	341+65.92	25
	RT	341+44.58	TO	341+69.58	25
	LT	346+41.36	TO	346+66.36	25
	RT	346+41.03	TO	346+66.03	25
TOTAL					1137.5

LOCATION	STATIONING				78200005
					Guardrail Reflectors, Type A
CORRIDOR #3	LT/RT	STA.	TO	STA.	EACH
Location 1	RT	130+77.43	TO	132+02.73	4
Location 2	RT	163+58.25	TO	164+83.25	4
Location 7	LT	261+67.32	TO	262+67.32	4
	RT	261+43.79	TO	262+43.79	4
Location 8	RT	290+47.94	TO	291+85.44	4
TOTAL					20

MODEL: $MODELNAME$
FILE NAME: $FILE$

USER NAME = $USER$	DESIGNED -	REVISED -	STATE OF ILLINOIS DEPARTMENT OF TRANSPORTATION
	DRAWN -	REVISED -	
PLOT SCALE = $SCALE$	CHECKED -	REVISED -	
PLOT DATE = $DATE$	DATE -	REVISED -	

QUANTITY SCHEDULES

SCALE: SHEET OF SHEETS STA. TO STA.

F.A. RTE.	SECTION	COUNTY	TOTAL SHEETS	SHEET NO.
VAR	D4 GUARDRAIL END SECT REPL 2020	VARIOUS	50	7
		CONTRACT NO. 68F57		
	ILLINOIS	FED. AID PROJECT		

LOCATION	STATIONING		72501000 Terminal Markers-Direct Applied
CORRIDOR #3	LT/RT	STA.	EACH
Location 1	LT	127+20.30	1
	RT	130+52.43	1
	LT	132+46.73	1
	RT	132+27.73	1
Location 2	RT	163+33.25	1
	RT	165+08.25	1
Location 3	RT	175+03.40	1
	RT	178+76.70	1
Location 4	RT	201+10.98	1
	LT	201+23.91	1
	RT	204+12.55	1
	LT	204+04.30	1
Location 5	LT	216+43.67	1
	RT	215+92.89	1
	RT	219+17.58	1
	LT	218+70.79	1
Location 6	RT	251+48.65	1
	LT	251+65.20	1
	RT	253+98.35	1
	LT	253+66.81	1
Location 7	LT	261+42.32	1
	LT	262+92.32	1
	RT	261+18.79	1
	RT	262+68.79	1
Location 8	LT	290+17.32	1
	RT	290+22.94	1
	RT	292+10.44	1
Location 9	LT	341+15.92	1
	RT	341+19.58	1
	LT	347+16.36	1
	RT	346+91.03	1
TOTAL			31

LOCATION	STATIONING				63000003 Steel Plate Beam Guardrail,
CORRIDOR #4	LT/RT	STA.	TO	STA.	FOOT
Location 3	LT	122+59.09	TO	123+09.09	50
Location 6	LT	36+99.21	TO	37+49.91	50
TOTAL					100

LOCATION	STATIONING				63100167 Traffic Barrier Terminal, Ty 1 (Special) Tangent
CORRIDOR #4	LT/RT	STA.	TO	STA.	EACH
Location 1	RT	226+65.27	TO	227+14.34	1
	LT	228+02.21	TO	228+53.57	1
	LT	229+03.97	TO	229+54.85	1
Location 2	LT	192+79.44	TO	193+28.86	1
Location 3	LT	122+09.49	TO	122+59.09	1
	LT	123+09.09	TO	123+59.09	1
Location 4	RT	114+46.43	TO	114+96.43	1
	LT	115+49.04	TO	115+99.04	1
	RT	117+42.43	TO	117+96.43	1
	LT	117+49.04	TO	117+99.04	1
Location 5	LT	69+00.28	TO	69+50.28	1
	LT	70+25.28	TO	70+75.28	1
Location 6	LT	36+49.91	TO	36+99.91	1
	LT	37+49.91	TO	37+99.91	1
TOTAL					14

LOCATION	STATIONING				48102100 Aggregate Wedge Shoulder, Type B	Z0001002 Guardrail Aggregate Erosion Control
CORRIDOR #4	LT/RT	STA.	TO	STA.	TON	TON
Location 1	RT	225+87.99	TO	227+18.43	12.92	13.07
	LT	227+52.19	TO	228+57.03	4.38	14.45
	LT	228+99.68	TO	229+59.92	1.47	13.55
Location 2	LT	192+75.50	TO	193+91.22	5.45	14.61
Location 3	LT	121+55.89	TO	124+11.09	9.27	39.59
Location 4	RT	114+05.23	TO	115+00.46	1.67	14.46
	LT	115+20.18	TO	116+03.04	1.26	14.46
	RT	117+42.43	TO	118+37.74	1.59	14.46
	LT	117+45.04	TO	118+27.03	1.17	14.46
Location 5	LT	68+59.35	TO	69+54.77	4.31	14.53
	LT	70+19.22	TO	71+20.28	4.96	18.34
Location 6	LT	36+16.60	TO	38+33.33	9.85	36.62
TOTAL					58.3	222.6

LOCATION	STATIONING				63200310 Guardrail Removal
CORRIDOR #4	LT/RT	STA.	TO	STA.	FOOT
Location 1	RT	226+65.27	TO	227+14.34	50
	LT	228+02.21	TO	228+53.57	50
	LT	229+03.97	TO	229+54.85	50
Location 2	LT	192+79.44	TO	193+04.16	25
Location 3	LT	122+34.09	TO	123+34.09	100
Location 4	RT	114+46.43	TO	114+96.43	25
	LT	115+74.04	TO	115+99.04	25
	RT	117+46.43	TO	117+71.43	25
	LT	117+49.04	TO	117+99.04	50
Location 5	LT	69+00.28	TO	69+50.28	50
	LT	70+25.28	TO	70+50.28	25
Location 6	LT	36+74.91	TO	37+74.91	100
TOTAL					575

LOCATION	STATIONING		72501000 Terminal Markers-Direct Applied
CORRIDOR #4	LT/RT	STA.	EACH
Location 1	RT	226+65.27	1
	LT	228+02.21	1
	LT	229+54.85	1
Location 2	LT	193+28.86	1
Location 3	LT	122+09.49	1
	LT	123+29.09	1
Location 4	RT	114+46.43	1
	LT	115+49.04	1
	RT	117+96.43	1
	LT	117+99.04	1
Location 5	LT	69+00.28	1
	RT	70+75.28	1
Location 6	LT	36+49.91	1
	LT	37+99.91	1
TOTAL			14

LOCATION	STATIONING				78200005 Guardrail Reflectors, Type A
CORRIDOR #4	LT/RT	STA.	TO	STA.	EACH
Location 3	LT	122+09.49	TO	123+59.0	4
Location 6	LT	36+49.91	TO	37+99.91	4
TOTAL					8

LOCATION	STATIONING				48102100 Aggregate Wedge Shoulder, Type B	Z0001002 Guardrail Aggregate Erosion Control
CORRIDOR #5	LT/RT	STA.	TO	STA.	TON	TON
Location 1	LT	339+96.93	TO	342+48.99	17.9	46.2
Location 2	RT	407+02.99	TO	408+05.51	6.7	16.7
	LT	406+87.61	TO	407+56.75	5	16.7
Location 3	LT	450+05.93	TO	451+06.24	9	16.7
	RT	450+09.73	TO	451+93.18	4.2	36.7
	LT	452+49.43	TO	453+50.43	9.2	16.7
Location 4	RT	453+92.29	TO	455+18.29	7.8	19.9
	LT	453+96.93	TO	456+24.43	4.4	39.8
	RT	455+76.91	TO	456+77.91	7.8	20.1
Location 5	LT	587+58.13	TO	588+59.13	0	21.4
	RT	487+36.81	TO	488+62.81	0	25.3
	RT	491+69.41	TO	492+70.41	0	25.3
	LT	492+64.29	TO	493+65.29	0	21.2
Location 6	RT	508+09.97	TO	508+84.44	7.2	16.7
	RT	509+84.19	TO	510+85.19	7.5	16.7
	LT	503+52.24	TO	504+53.24	5.5	16.7
	LT	509+41.95	TO	510+42.95	5.4	16.7
Location 7	LT	524+62.02	TO	525+63.02	8.5	16.7
	RT	525+10.57	TO	526+11.57	8.4	16.7
	RT	527+02.26	TO	528+03.26	8.3	16.7
	LT	527+29.96	TO	528+30.96	8.5	16.7
Location 8	RT	620+43.00	TO	621+43.00	9.3	16.7
	LT	620+43.81	TO	621+41.81	9	16.7
	LT	623+39.44	TO	624+40.44	8.9	16.7
	RT	623+50.87	TO	624+41.87	9.3	16.7
Location 9	LT	28+17.14	TO	29+17.62	8.3	16.7
Location 10	LT	35+59.95	TO	36+60.95	4.9	16.7
	LT	37+48.62	TO	38+49.62	4.6	16.7
TOTAL					185.6	573.2

LOCATION	STATIONING				63000003 Steel Plate Beam Guardrail, Ty A, 9ft.
CORRIDOR #5	LT/RT	STA.	TO	STA.	FOOT
Location 1	LT	340+91.49	TO	341+53.99	62.5
Location 3	RT	450+73.29	TO	450+98.29	25
Location 4	LT	454+91.93	TO	455+29.43	37.5
	RT	454+87.29	TO	455+12.29	25
Location 5	RT	488+31.81	TO	488+56.81	25
TOTAL					175

LOCATION	STATIONING				63100169 Traffic Barrier Terminal, Ty 1 (Special) Flared
CORRIDOR #5	LT/RT	STA.	TO	STA.	EACH
Location 2	RT	407+02.99	TO	407+62.23	1
Location 3	RT	450+98.29	TO	451+48.29	1
Location 6	LT	503+97.24	TO	504+47.24	1
TOTAL					3

MODEL: $MODELNAME$
FILE NAME: $FILEL$

USER NAME = $USER$	DESIGNED -	REVISED -
	DRAWN -	REVISED -
PLOT SCALE = $SCALE$	CHECKED -	REVISED -
PLOT DATE = $DATE$	DATE -	REVISED -

STATE OF ILLINOIS
DEPARTMENT OF TRANSPORTATION

QUANTITY SCHEDULES

SCALE: | SHEET OF SHEETS | STA. TO STA.

F.A. RTE.	SECTION	COUNTY	TOTAL SHEETS	SHEET NO.
VAR	D4 GUARDRAIL END SECT REPL 2020	VARIOUS	50	9
		CONTRACT NO. 68F57		
	ILLINOIS	FED. AID PROJECT		

LOCATION	STATIONING				63100167 Traffic Barrier Terminal, Ty 1 (Special) Tangent
CORRIDOR #5	LT/RT	STA.	TO	STA.	EACH
Location 1	LT	339+96.93	TO	342+48.99	2
Location 2	RT	407+02.99	TO	408+05.51	1
Location 3	LT	450+05.93	TO	451+06.24	1
	RT	450+09.73	TO	451+93.18	1
	LT	452+49.43	TO	453+50.43	1
Location 4	RT	453+92.29	TO	455+18.29	1
	LT	453+96.93	TO	456+24.43	2
	RT	455+76.91	TO	456+77.91	1
Location 5	LT	587+58.13	TO	588+59.13	1
	RT	487+36.81	TO	488+62.81	1
	RT	491+69.41	TO	492+70.41	1
	LT	492+64.29	TO	493+65.29	1
Location 6	RT	508+09.97	TO	508+84.44	1
	RT	509+84.19	TO	510+85.19	1
	LT	509+41.95	TO	510+42.95	1
Location 7	LT	524+62.02	TO	525+63.02	1
	RT	525+10.57	TO	526+11.57	1
	RT	527+02.26	TO	528+03.26	1
	LT	527+29.96	TO	528+30.96	1
Location 8	RT	620+43.00	TO	621+43.00	1
	LT	620+43.81	TO	621+41.81	1
	LT	623+39.44	TO	624+40.44	1
	RT	623+50.87	TO	624+41.87	1
Location 9	LT	28+17.14	TO	29+17.62	1
Location 10	LT	35+59.95	TO	36+60.95	1
	LT	37+48.62	TO	38+49.62	1
TOTAL					28

LOCATION	STATIONING				63200310 Guardrail Removal
CORRIDOR #5	LT/RT	STA.	TO	STA.	FOOT
Location 1	LT	340+66.49	TO	341+78.79	112.5
Location 2	RT	407+12.23	TO	407+62.23	50
	LT	406+93.66	TO	407+43.66	50
Location 3	LT	450+75.24	TO	451+00.24	25
	RT	450+23.29	TO	451+23.29	100
	LT	452+55.43	TO	452+80.43	25
Location 4	RT	454+62.29	TO	455+12.29	50
	LT	454+66.93	TO	455+54.93	87.5
	RT	455+82.91	TO	456+07.91	25
Location 5	LT	488+28.13	TO	488+53.13	25
	RT	488+31.81	TO	488+56.81	25
	RT	491+75.41	TO	492+00.41	25
	LT	492+70.29	TO	493+20.29	50
Location 6	RT	508+53.44	TO	508+78.44	25
	RT	509+90.19	TO	510+15.19	25
	LT	504+22.24	TO	504+47.27	25
	LT	509+47.95	TO	509+72.95	25
Location 7	LT	525+32.02	TO	525+57.02	25
	RT	525+80.57	TO	526+05.57	25
	RT	527+08.26	TO	527+33.26	25
	LT	527+35.96	TO	527+60.96	25
Location 8	RT	621+12.00	TO	621+37.00	25
	LT	621+10.81	TO	621+35.81	25
	LT	623+45.44	TO	623+70.44	25
	RT	623+56.87	TO	623+81.87	25
Location 9	LT	28+61.62	TO	29+11.62	50
Location 10	LT	36+29.95	TO	36+54.95	25
	LT	37+54.62	TO	38+04.62	50
TOTAL					1075

LOCATION	STATIONING				78200005 Guardrail Reflectors, Type A
CORRIDOR #5	LT/RT	STA.	TO	STA.	EACH
Location 1	LT	340+66.49	TO	341+78.79	4
Location 3	RT	450+23.29	TO	451+23.29	4
Location 4	LT	454+66.93	TO	455+54.93	4
TOTAL					12

LOCATION	STATIONING		72501000 Terminal Markers-Direct Applied
CORRIDOR #5	LT/RT	STA.	EACH
Location 1	RT	340+41.49	1
	RT	342+03.99	1
Location 2	RT	407+62.23	1
	LT	407+43.66	1
Location 3	RT	450+23.29	1
	LT	450+50.24	1
	RT	451+48.29	1
	LT	453+05.43	1
Location 4	RT	454+37.29	1
	LT	454+41.93	1
	RT	456+32.91	1
	LT	455+79.43	1
Location 5	LT	488+03.13	1
	RT	487+81.81	1
	RT	492+25.41	1
	LT	493+20.29	1
Location 6	LT	503+97.24	1
	RT	508+28.44	1
	RT	510+40.19	1
	LT	509+97.95	1
Location 7	LT	525+07.02	1
	RT	525+55.57	1
	RT	527+58.26	1
	LT	527+85.96	1
Location 8	RT	620+87.00	1
	LT	620+85.81	1
	RT	624+06.87	1
	LT	623+95.44	1
Location 9	LT	28+61.62	1
Location 10	LT	36+04.95	1
	LT	38+04.62	1
TOTAL			31

LOCATION	67100100 MOBILIZATION	70100450 TRAFFIC CONTROL AND PROTECTION, STANDARD 701201	70100460 TRAFFIC CONTROL AND PROTECTION, STANDARD 701306
	L SUM	L SUM	L SUM
CORRIDOR #1	0.2	0.2	0.2
CORRIDOR #2	0.2	0.2	0.2
CORRIDOR #3	0.2	0.2	0.2
CORRIDOR #4	0.2	0.2	0.2
CORRIDOR #5	0.2	0.2	0.2
GRAND TOTAL	1	1	1

IL 17
MERCER COUNTY
CORRIDOR 1

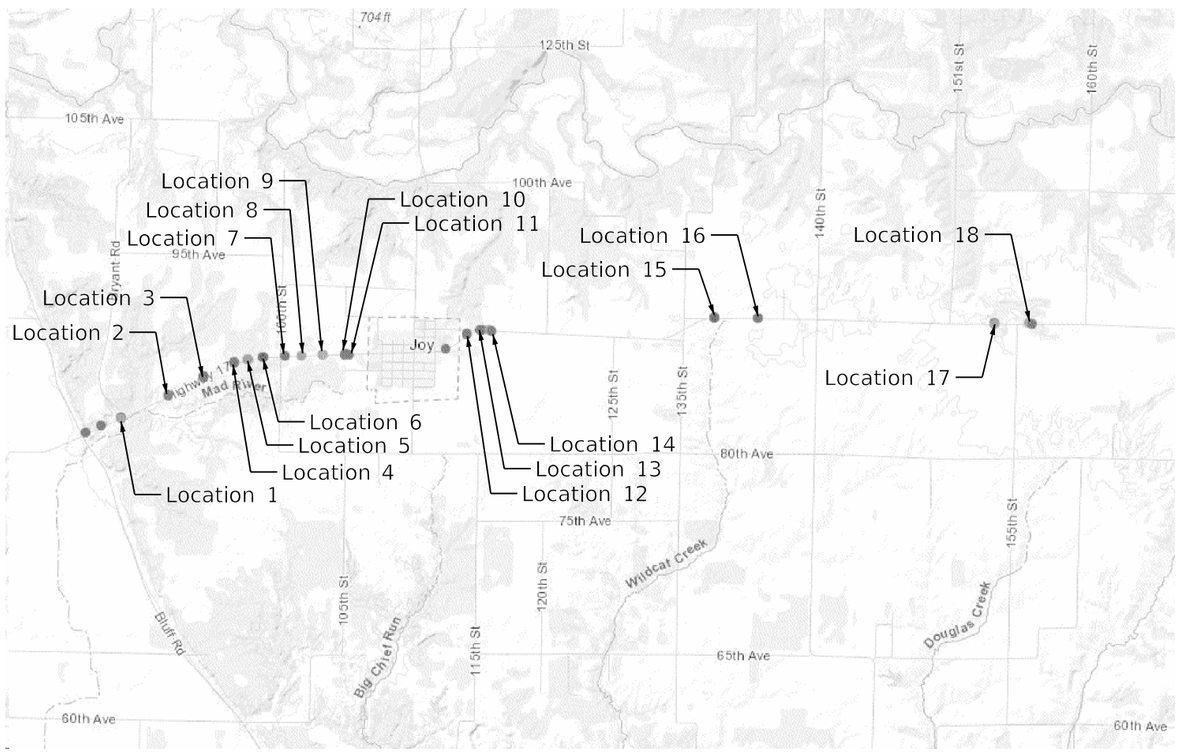

IL 17
MERCER COUNTY
CORRIDOR 2

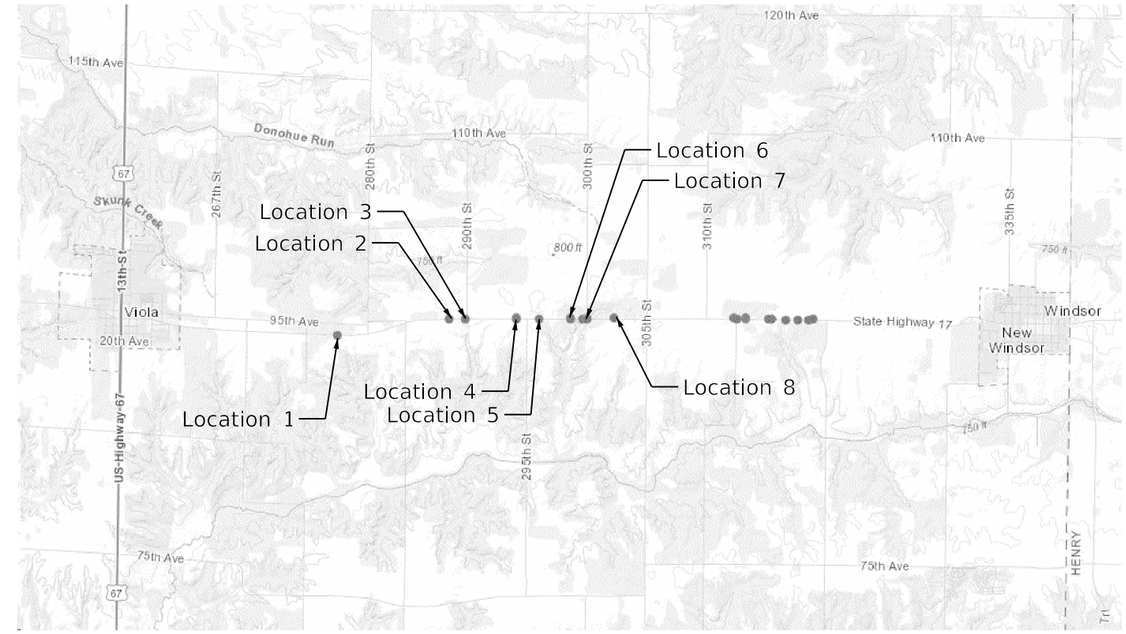

US 150
KNOX COUNTY
CORRIDOR 3

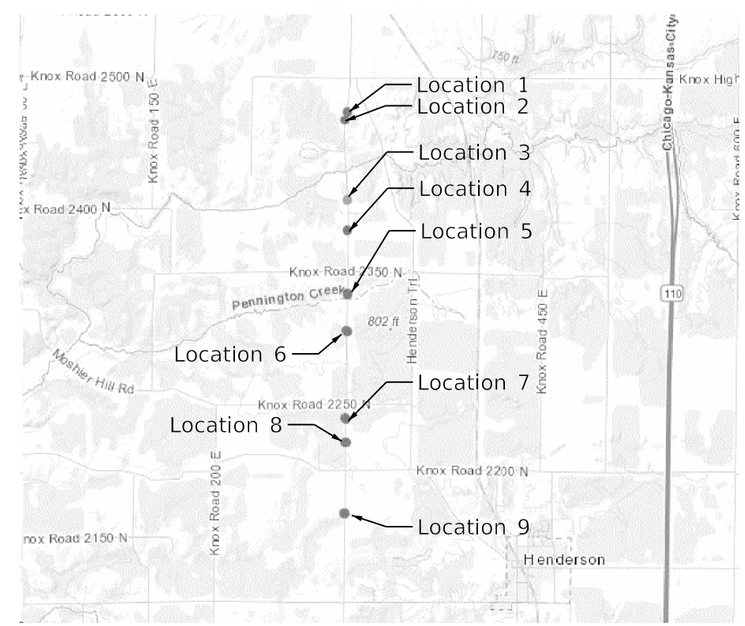

MODEL: $MODELNAME$
FILE NAME: $FILEL$

USER NAME = $USER$	DESIGNED -	REVISED -	
	DRAWN -	REVISED -	
PLOT SCALE = $SCALE$	CHECKED -	REVISED -	
PLOT DATE = $DATE$	DATE -	REVISED -	

STATE OF ILLINOIS
DEPARTMENT OF TRANSPORTATION

LOCATION MAPS
CORRIDORS 1, 2, & 3

SCALE: | SHEET OF SHEETS | STA. TO STA.

F.A. RTE.	SECTION	COUNTY	TOTAL SHEETS	SHEET NO.
VAR	D4 GUARDRAIL END SECT REPL 2020	VARIOUS	50	12
		CONTRACT NO. 68F57		
	ILLINOIS	FED. AID PROJECT		

IL 61
MCDONOUGH COUNTY
CORRIDOR 4

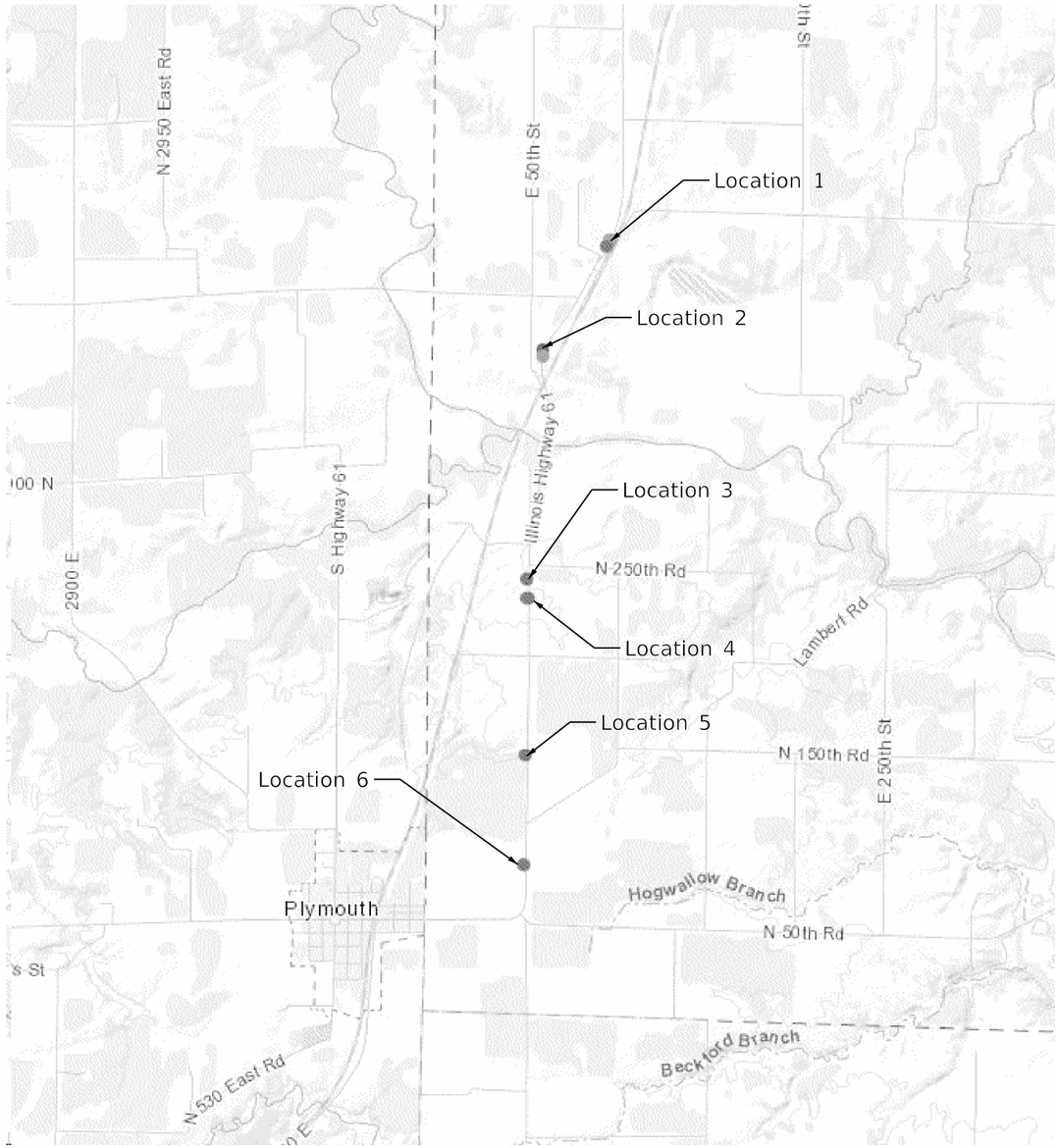

IL 97 AND US 24
FULTON COUNTY
CORRIDOR 5

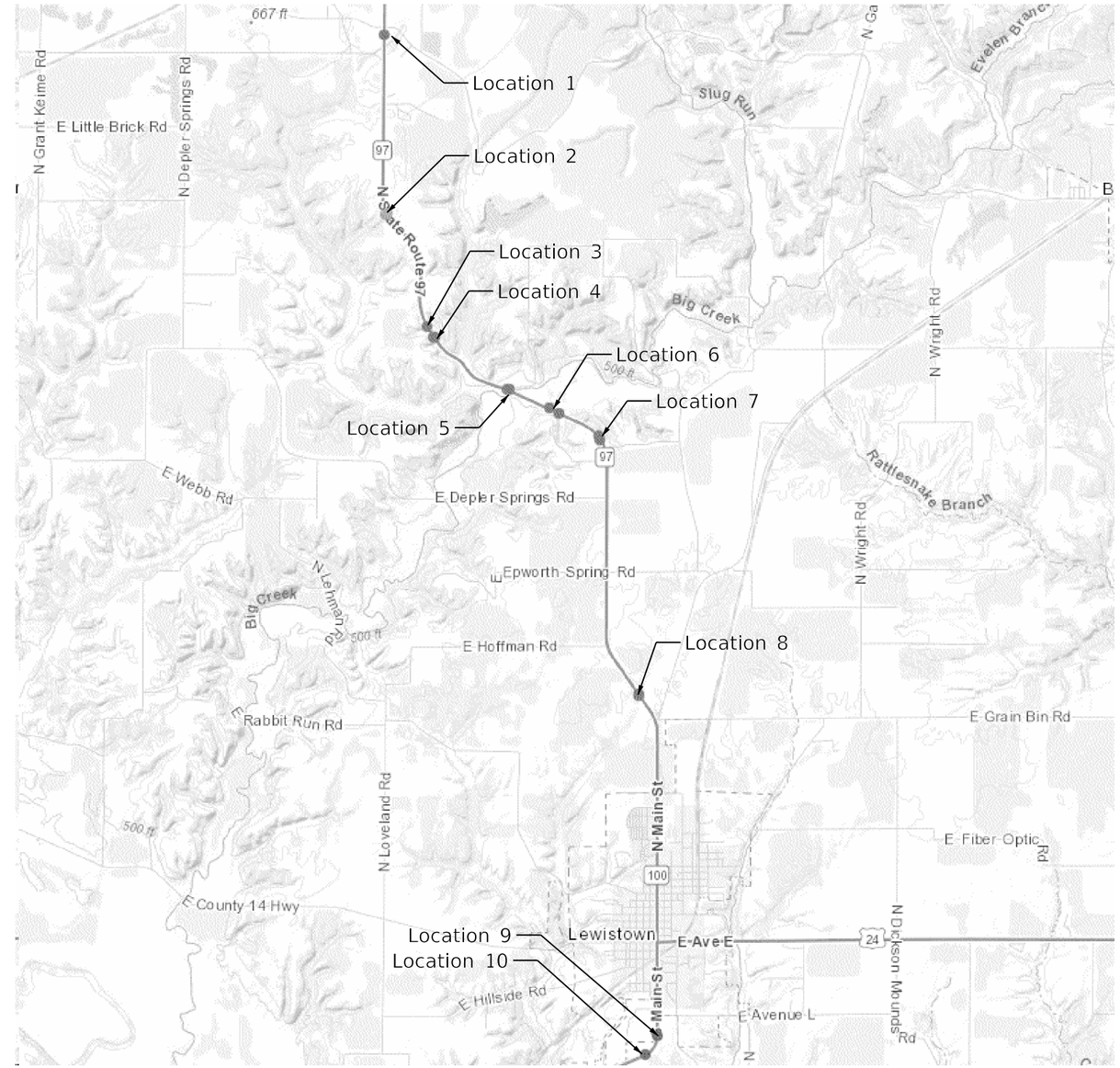

USER NAME = $USER$	DESIGNED -	REVISED -	
	DRAWN -	REVISED -	
PLOT SCALE = $SCALE$	CHECKED -	REVISED -	
PLOT DATE = $DATE$	DATE -	REVISED -	

STATE OF ILLINOIS
DEPARTMENT OF TRANSPORTATION

LOCATION MAPS
CORRIDOR 4 & 5

SCALE: | SHEET OF SHEETS | STA. TO STA.

F.A. RTE.	SECTION	COUNTY	TOTAL SHEETS	SHEET NO.
VAR	D4 GUARDRAIL END SECT REPL 2020	VARIOUS	50	13

CONTRACT NO. 68F57

ILLINOIS | FED. AID PROJECT

MODEL: $MODELNAME$
FILE NAME: $FILE$

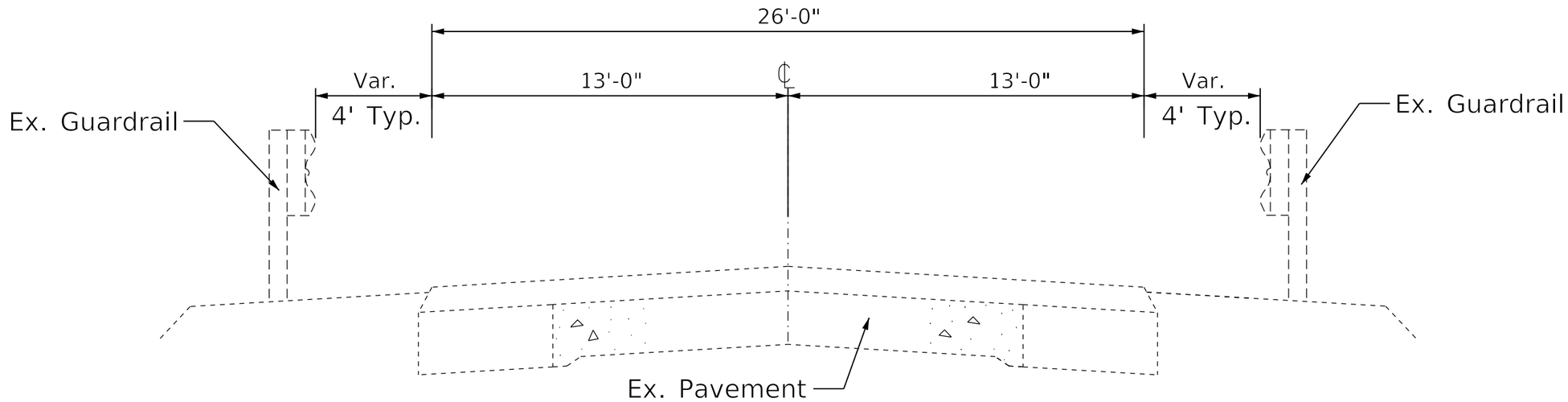

EXISTING TYPICAL SECTION

ALL CORRIDORS

Note: Some locations included HMA shoulders or gutter section

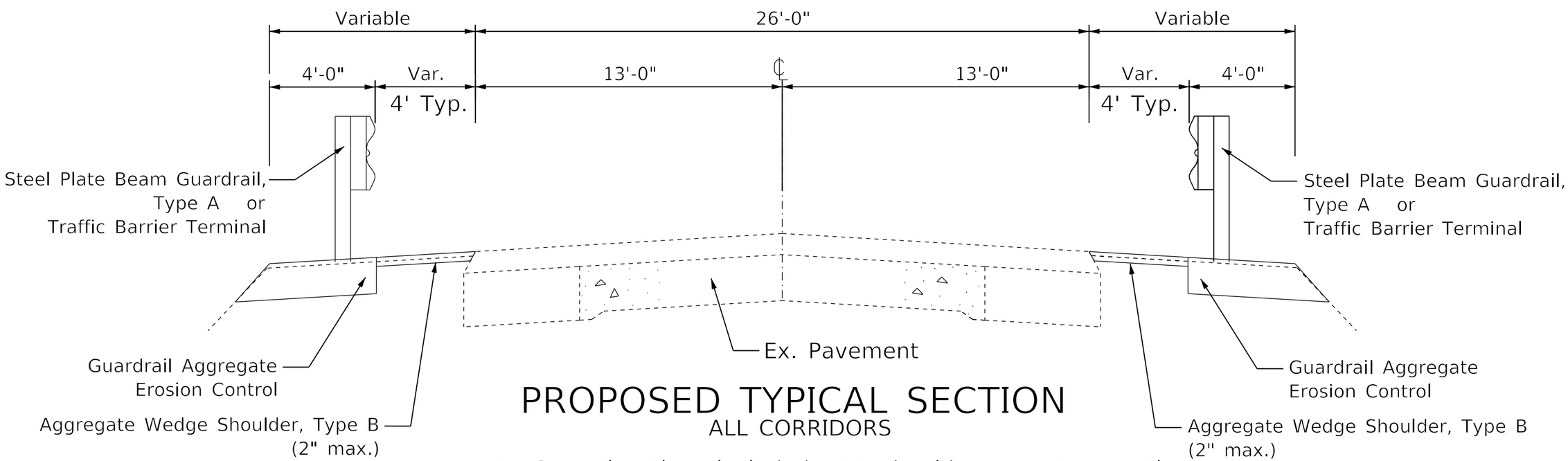

PROPOSED TYPICAL SECTION

ALL CORRIDORS

Note: Some locations included HMA shoulders or gutter section

MODEL: $MODELNAME$
FILE NAME: $FILE$

USER NAME = $USER$	DESIGNED -	REVISED -	
	DRAWN -	REVISED -	
PLOT SCALE = $SCALE$	CHECKED -	REVISED -	
PLOT DATE = $DATE$	DATE -	REVISED -	

STATE OF ILLINOIS
DEPARTMENT OF TRANSPORTATION

TYPICAL SECTIONS

SCALE: SHEET OF SHEETS STA. TO STA.

F.A. RTE.	SECTION	COUNTY	TOTAL SHEETS	SHEET NO.
VAR	D4 GUARDRAIL END SECT REPL 2020	VARIOUS	50	14

CONTRACT NO. 68F57

ILLINOIS FED. AID PROJECT

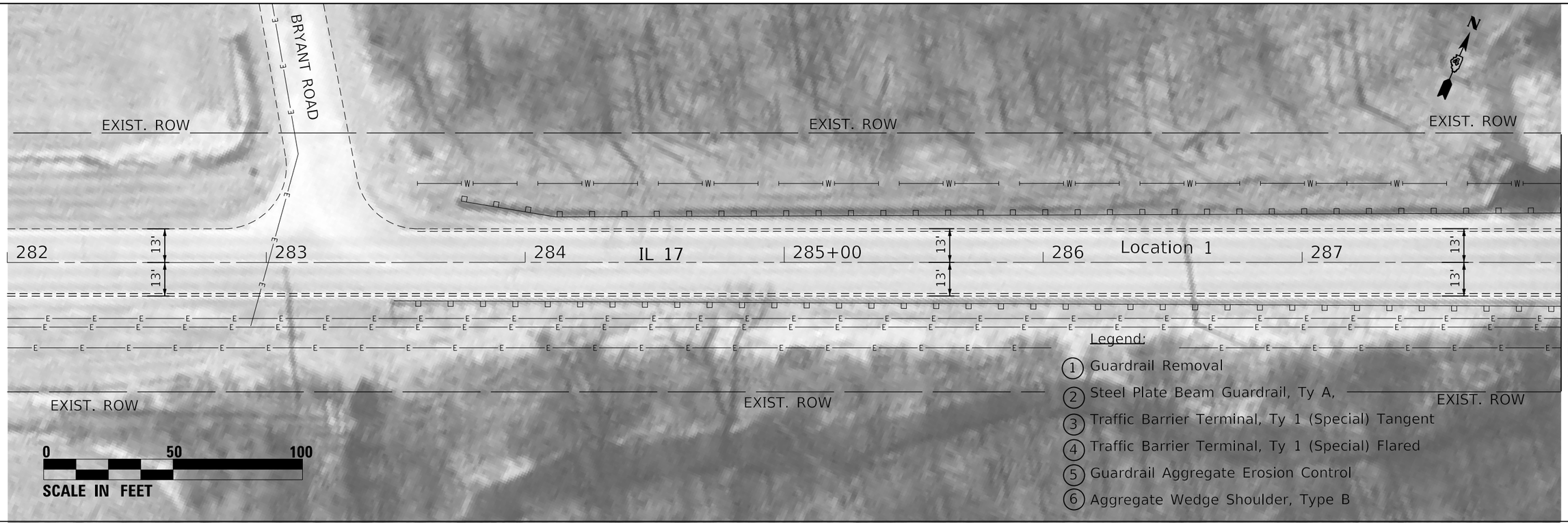

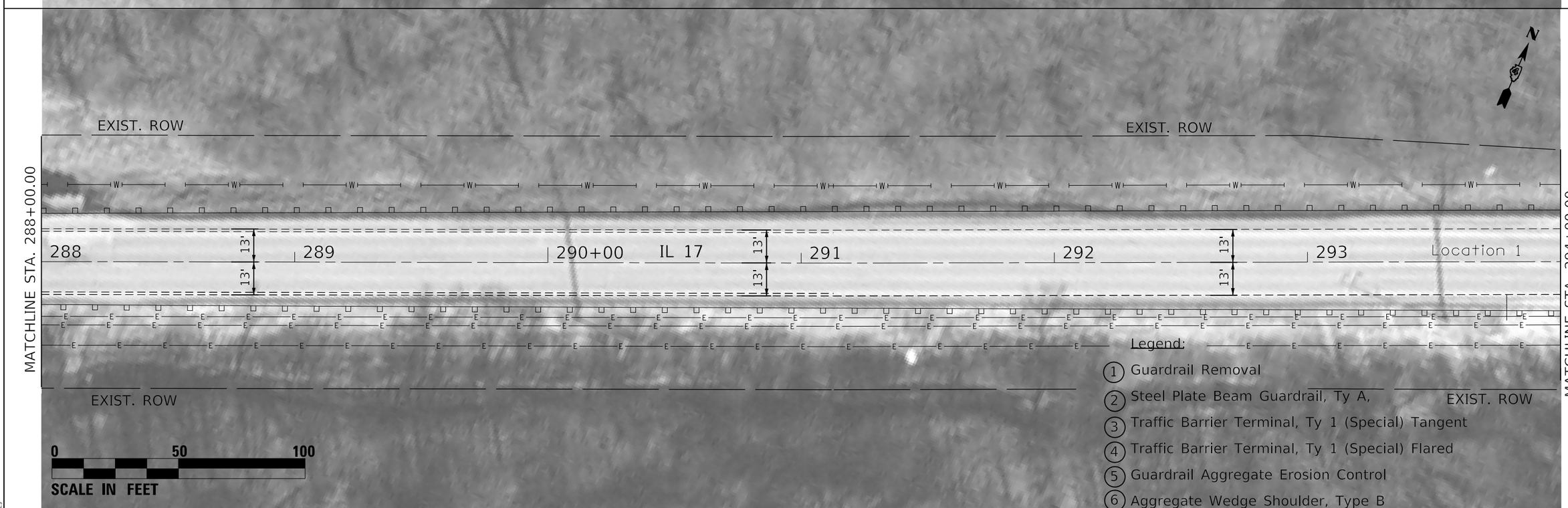

MODEL: $MODELNAME$
FILE NAME: $FILE$

USER NAME = $USER$	DESIGNED -	REVISED -
	DRAWN -	REVISED -
PLOT SCALE = $SCALE$	CHECKED -	REVISED -
PLOT DATE = $DATE$	DATE -	REVISED -

STATE OF ILLINOIS
DEPARTMENT OF TRANSPORTATION

CORRIDOR 1 (IL 17)
LOCATION 1

SCALE: | SHEET OF SHEETS | STA. TO STA.

F.A. RTE.	SECTION	COUNTY	TOTAL SHEETS	SHEET NO.
VAR	D4 GUARDRAIL END SECT REPL	VARIOUS	50	15

CONTRACT NO. 68F57

ILLINOIS | FED. AID PROJECT

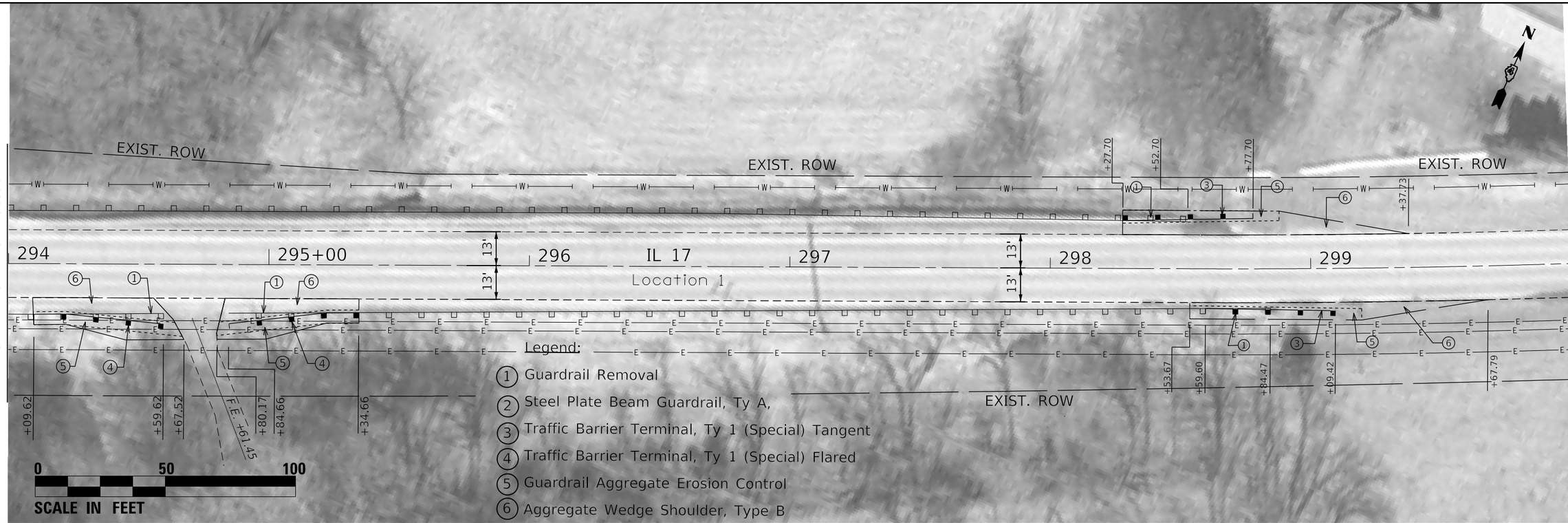

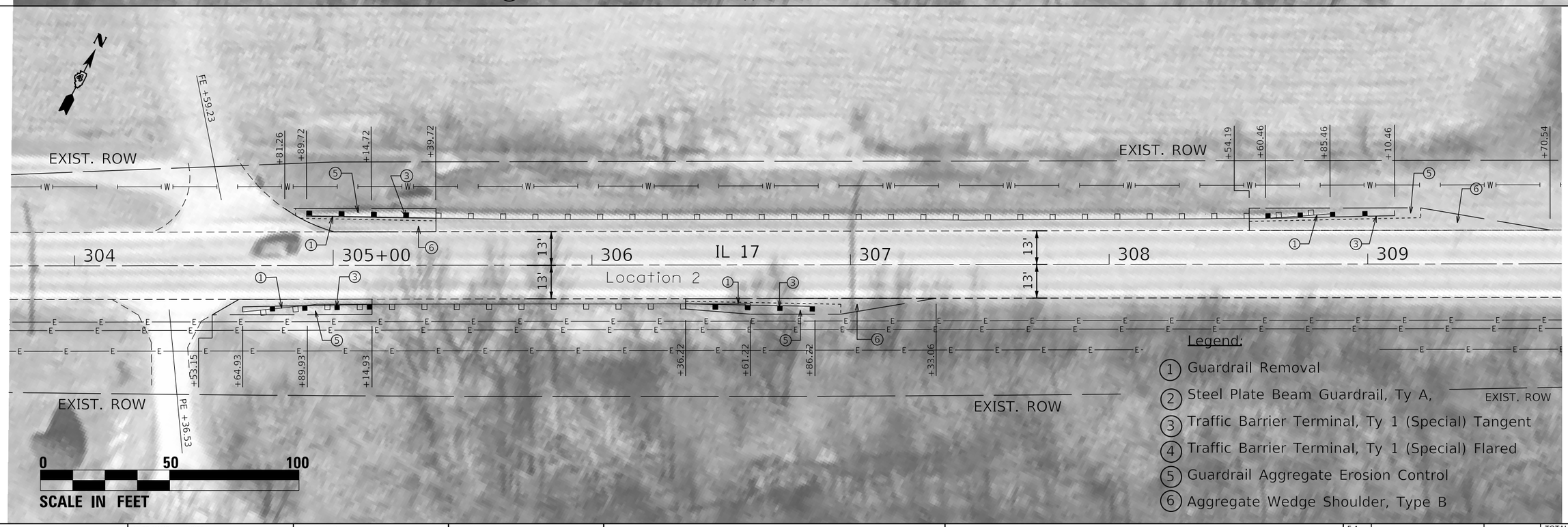

MODEL: $MODELNAME$
FILE NAME: $FILEL$

USER NAME = $USER$	DESIGNED -	REVISED -	
	DRAWN -	REVISED -	
PLOT SCALE = $SCALE$	CHECKED -	REVISED -	
PLOT DATE = $DATE$	DATE -	REVISED -	

STATE OF ILLINOIS
DEPARTMENT OF TRANSPORTATION

CORRIDOR 1 (IL 17)
LOCATION 1 AND 2

SCALE: | SHEET OF SHEETS | STA. TO STA.

F.A. RTE.	SECTION	COUNTY	TOTAL SHEETS	SHEET NO.
VAR	D4 GUARDRAIL END SECT REPL 2020	VARIOUS	50	16
		CONTRACT NO. 68F57		
	ILLINOIS	FED. AID PROJECT		

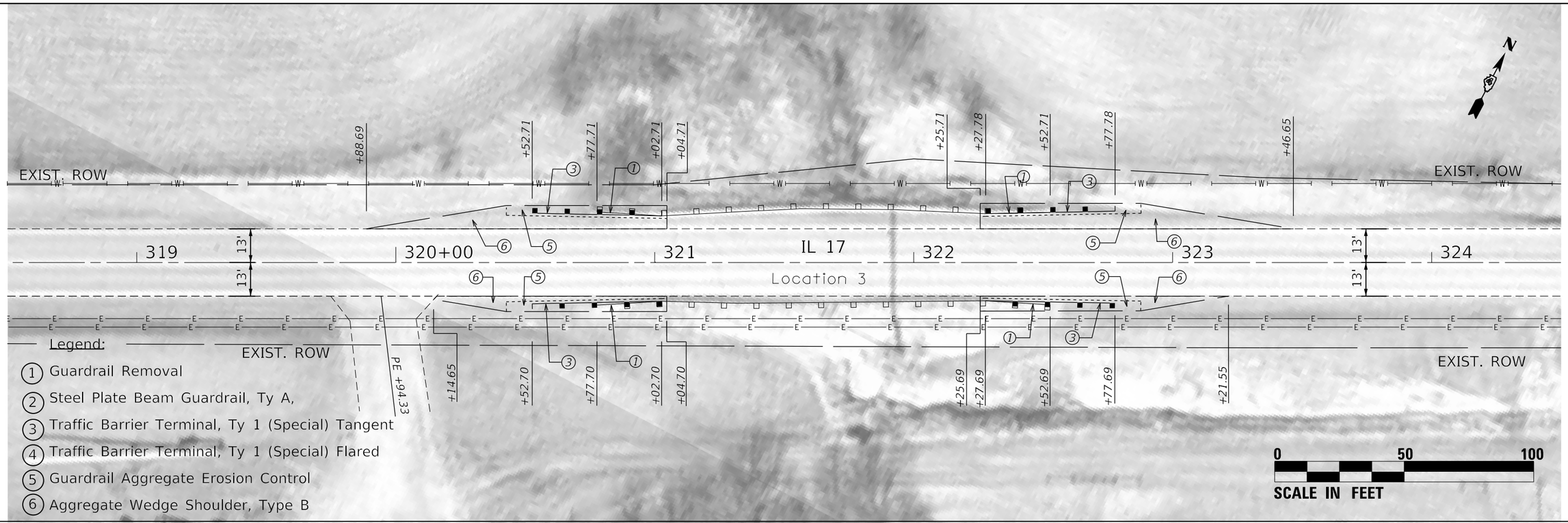

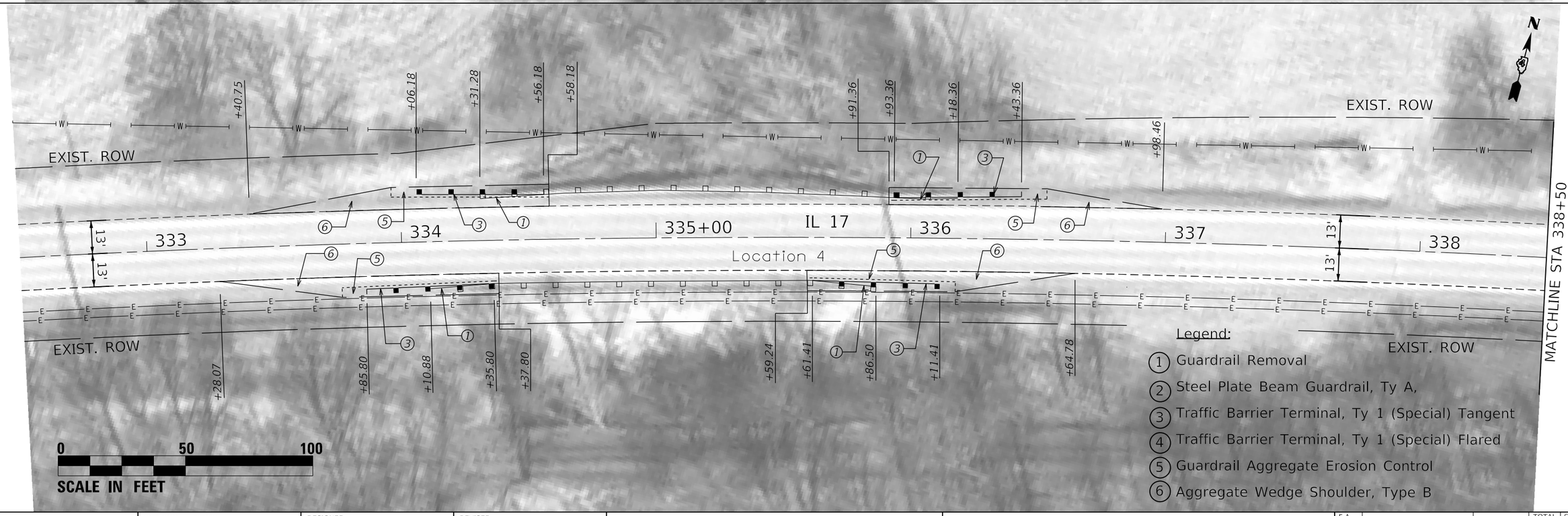

MODEL: $MODELNAME$
FILE NAME: $FILE$

USER NAME = $USER$	DESIGNED -	REVISED -
	DRAWN -	REVISED -
PLOT SCALE = $SCALE$	CHECKED -	REVISED -
PLOT DATE = $DATE$	DATE -	REVISED -

STATE OF ILLINOIS
DEPARTMENT OF TRANSPORTATION

CORRIDOR 1 (IL 17)
LOCATION 3 AND 4

SCALE: | SHEET OF SHEETS | STA. TO STA.

F.A. RTE.	SECTION	COUNTY	TOTAL SHEETS	SHEET NO.
VAR	D4 GUARDRAIL END SECT REPL 2020	VARIOUS	50	17
		CONTRACT NO. 68F57		
		ILLINOIS FED. AID PROJECT		

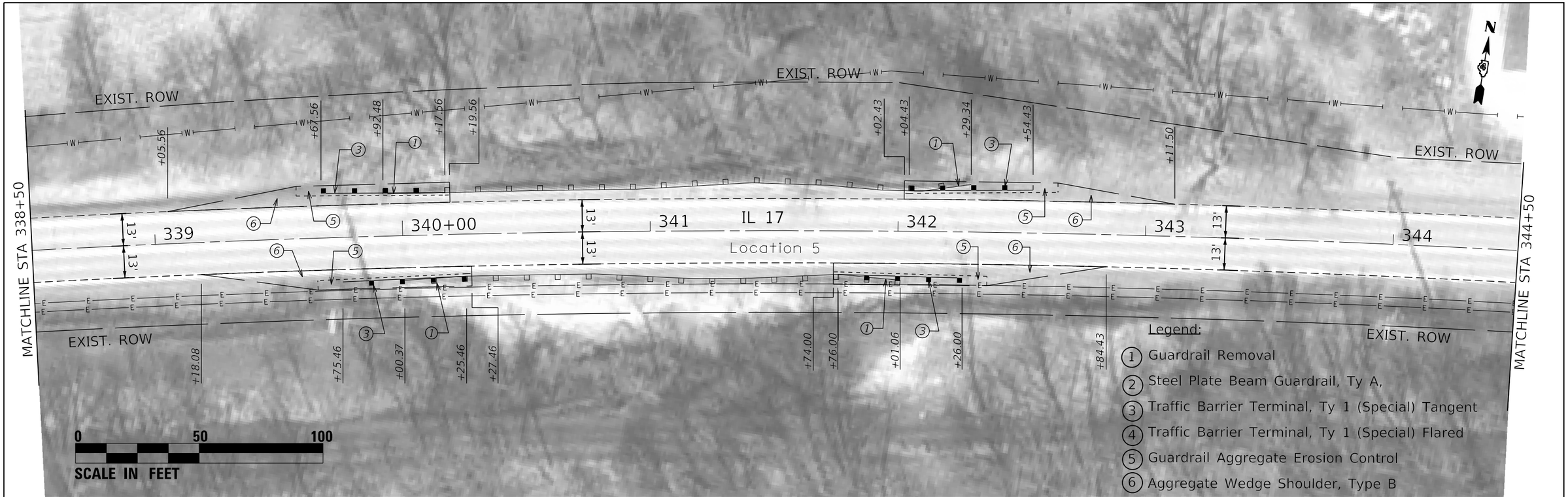

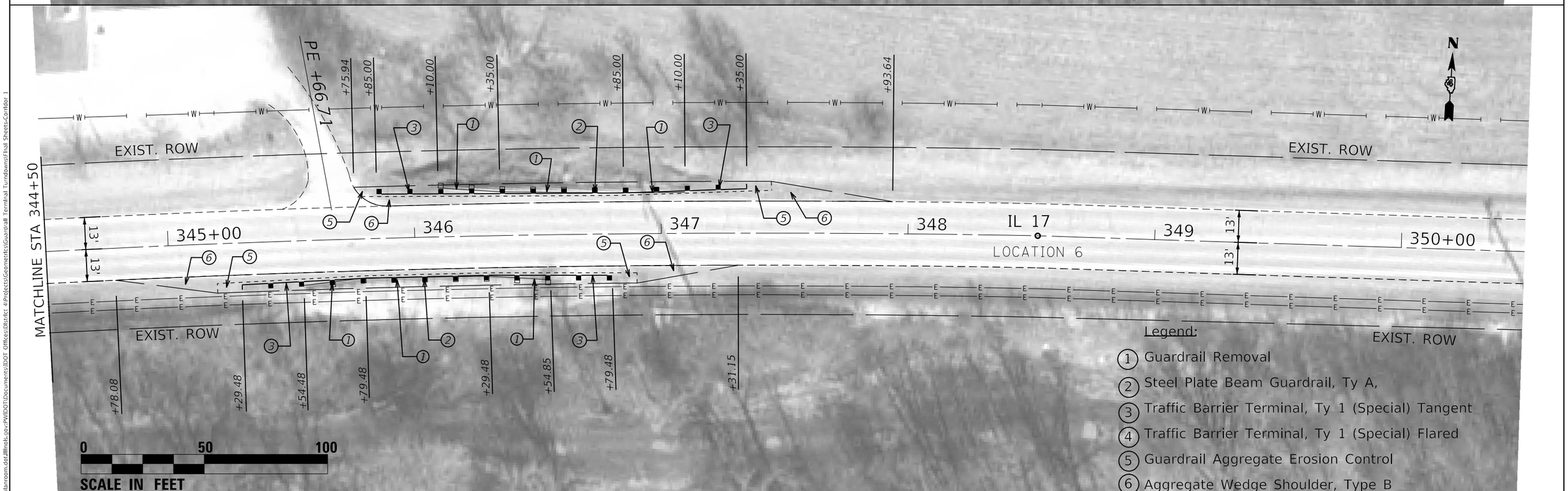

MODEL: Default
FILE NAME: pw:\\uhanroom.dot.illinois.gov:PWIDOT\Documents\IDOT Offices\District 4\Projects\Geometrics\Guardrail Terminal Turndowns\Final Sheets-Corridor 1

USER NAME = Crespole	DESIGNED -	REVISED -
	DRAWN -	REVISED -
PLOT SCALE = 40.0000 ' / in.	CHECKED -	REVISED -
PLOT DATE = 6/26/2020	DATE -	REVISED -

STATE OF ILLINOIS
DEPARTMENT OF TRANSPORTATION

CORRIDOR 1 (IL 17)
LOCATION 5 AND 6

SCALE: | SHEET OF SHEETS | STA. TO STA.

F.A. RTE.	SECTION	COUNTY	TOTAL SHEETS	SHEET NO.
VAR	D4 GUARDRAIL END SECT REPL 2020	VARIOUS	50	18
		CONTRACT NO. 68F57		
		ILLINOIS	FED. AID PROJECT	

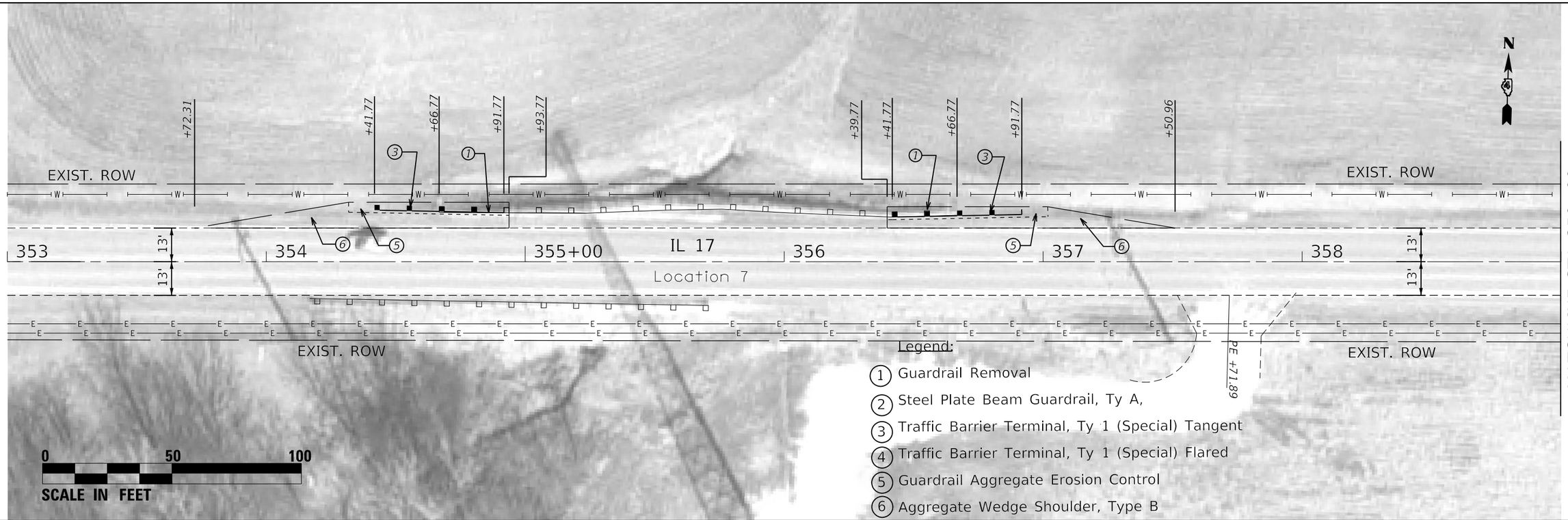

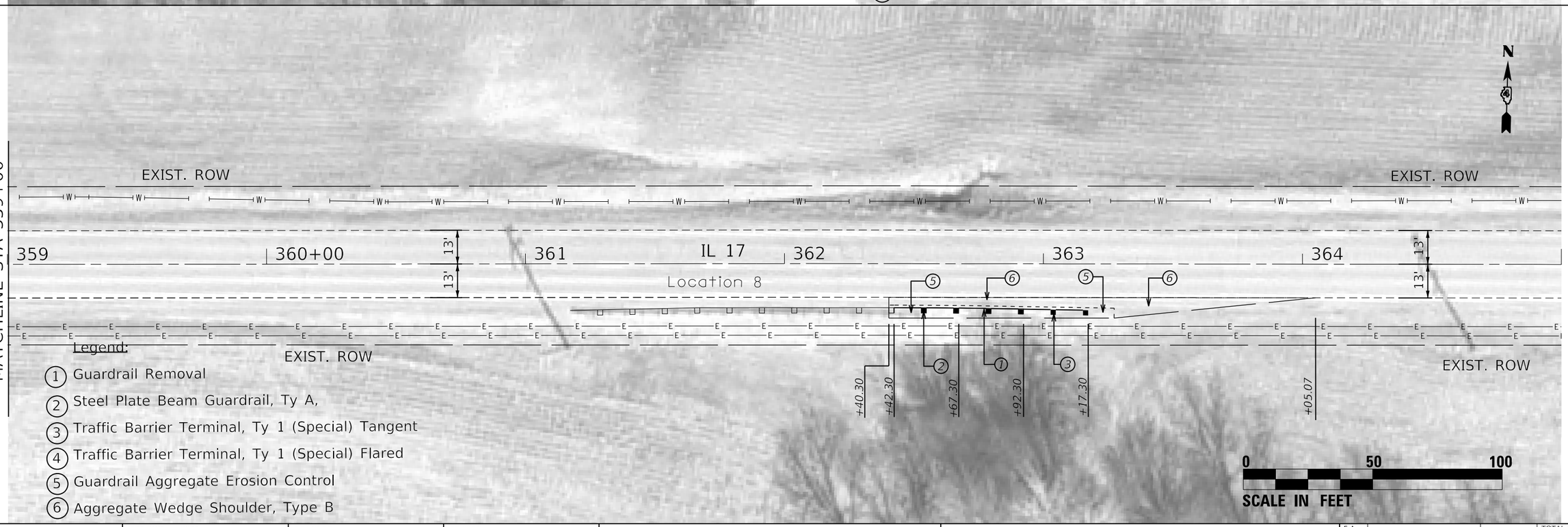

MODEL: $MODELNAME$
FILE NAME: $TILE$

USER NAME = $USER$	DESIGNED -	REVISED -
	DRAWN -	REVISED -
PLOT SCALE = $SCALE$	CHECKED -	REVISED -
PLOT DATE = $DATE$	DATE -	REVISED -

STATE OF ILLINOIS
DEPARTMENT OF TRANSPORTATION

CORRIDOR 1 (IL 17)
LOCATION 7 AND 8

SCALE: | SHEET OF SHEETS | STA. TO STA.

F.A. RTE.	SECTION	COUNTY	TOTAL SHEETS	SHEET NO.
VAR	D4 GUARDRAIL END SECT REPL 2020	VARIOUS	50	19
		CONTRACT NO. 68F57		
	ILLINOIS	FED. AID PROJECT		

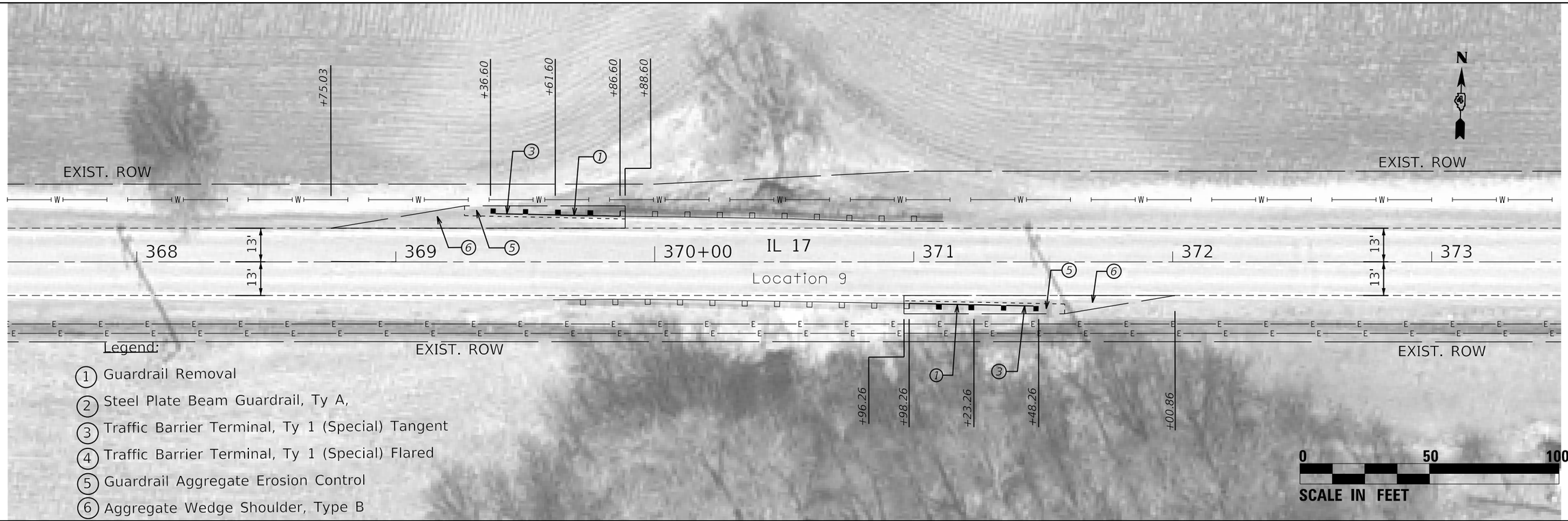

Legend:

1. Guardrail Removal
2. Steel Plate Beam Guardrail, Ty A,
3. Traffic Barrier Terminal, Ty 1 (Special) Tangent
4. Traffic Barrier Terminal, Ty 1 (Special) Flared
5. Guardrail Aggregate Erosion Control
6. Aggregate Wedge Shoulder, Type B

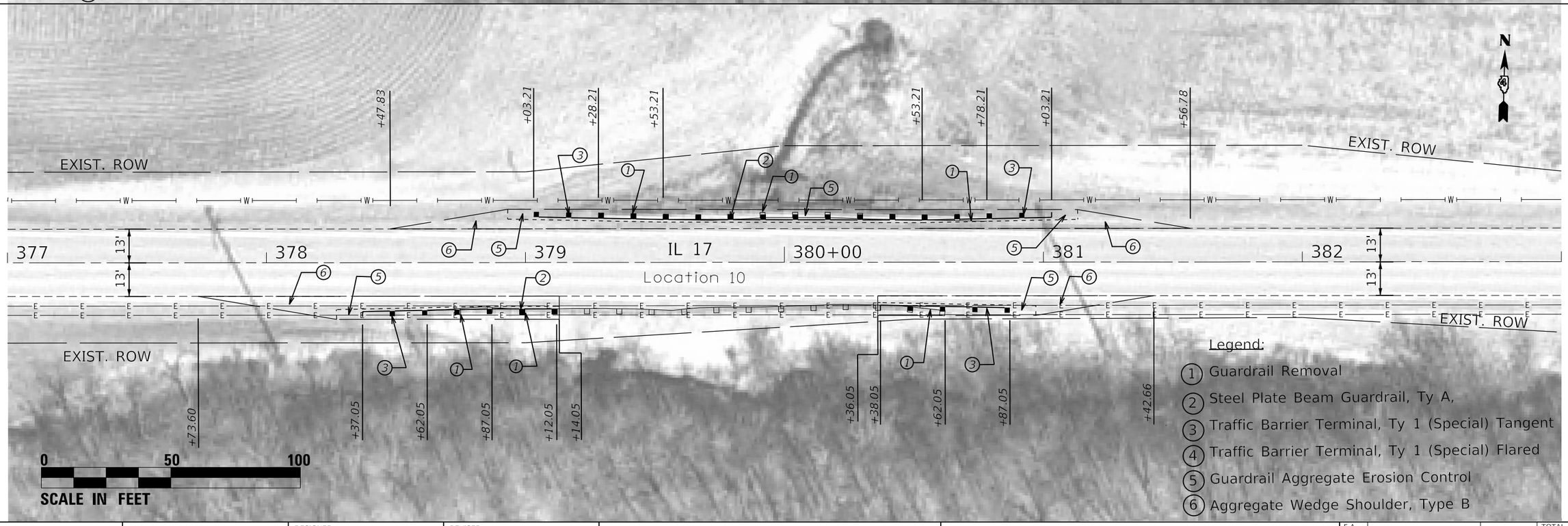

Legend:

1. Guardrail Removal
2. Steel Plate Beam Guardrail, Ty A,
3. Traffic Barrier Terminal, Ty 1 (Special) Tangent
4. Traffic Barrier Terminal, Ty 1 (Special) Flared
5. Guardrail Aggregate Erosion Control
6. Aggregate Wedge Shoulder, Type B

MODEL: $MODELNAME$
FILE NAME: $FILE$

USER NAME = $USER$	DESIGNED -	REVISED -
	DRAWN -	REVISED -
PLOT SCALE = $SCALE$	CHECKED -	REVISED -
PLOT DATE = $DATE$	DATE -	REVISED -

STATE OF ILLINOIS
DEPARTMENT OF TRANSPORTATION

CORRIDOR 1 (IL 17)
LOCATION 9 AND 10

SCALE: | SHEET OF SHEETS | STA. TO STA.

F.A. RTE.	SECTION	COUNTY	TOTAL SHEETS	SHEET NO.
VAR	D4 GUARDRAIL END SECT REPL 2020	VARIOUS	50	20
		CONTRACT NO. 68F57		
		ILLINOIS	FED. AID PROJECT	

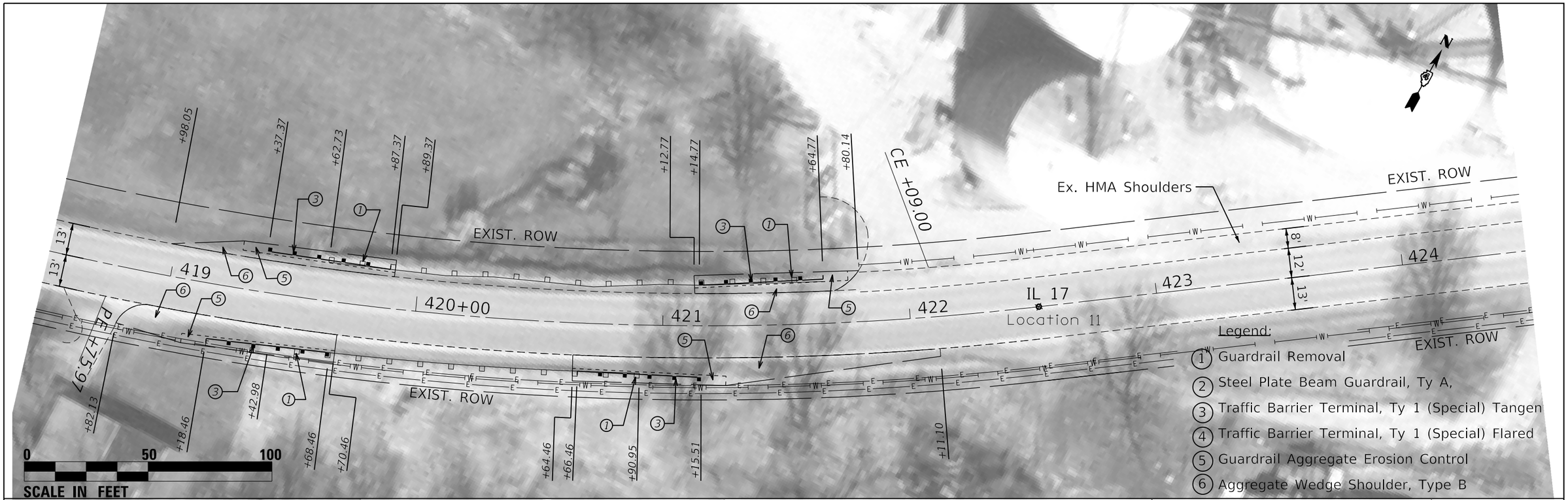

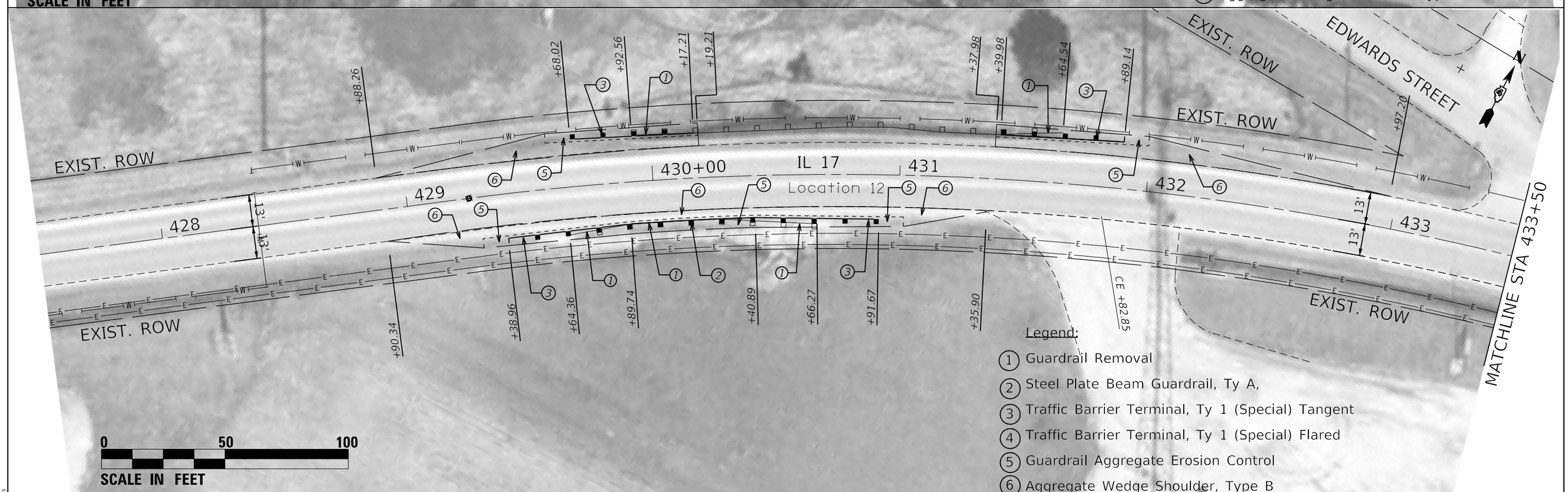

MODEL: $MODELNAME$
FILE NAME: $FILE$

USER NAME = $USER$	DESIGNED -	REVISED -
	DRAWN -	REVISED -
PLOT SCALE = $SCALE$	CHECKED -	REVISED -
PLOT DATE = $DATE$	DATE -	REVISED -

STATE OF ILLINOIS
DEPARTMENT OF TRANSPORTATION

CORRIDOR 1 (IL 17)
LOCATION 11 AND 12

SCALE: SHEET OF SHEETS STA. TO STA.

F.A. RTE.	SECTION	COUNTY	TOTAL SHEETS	SHEET NO.
VAR	D4 GUARDRAIL END SECT REPL 2020	VARIOUS	50	21
		CONTRACT NO. 68F57		
		ILLINOIS FED. AID PROJECT		

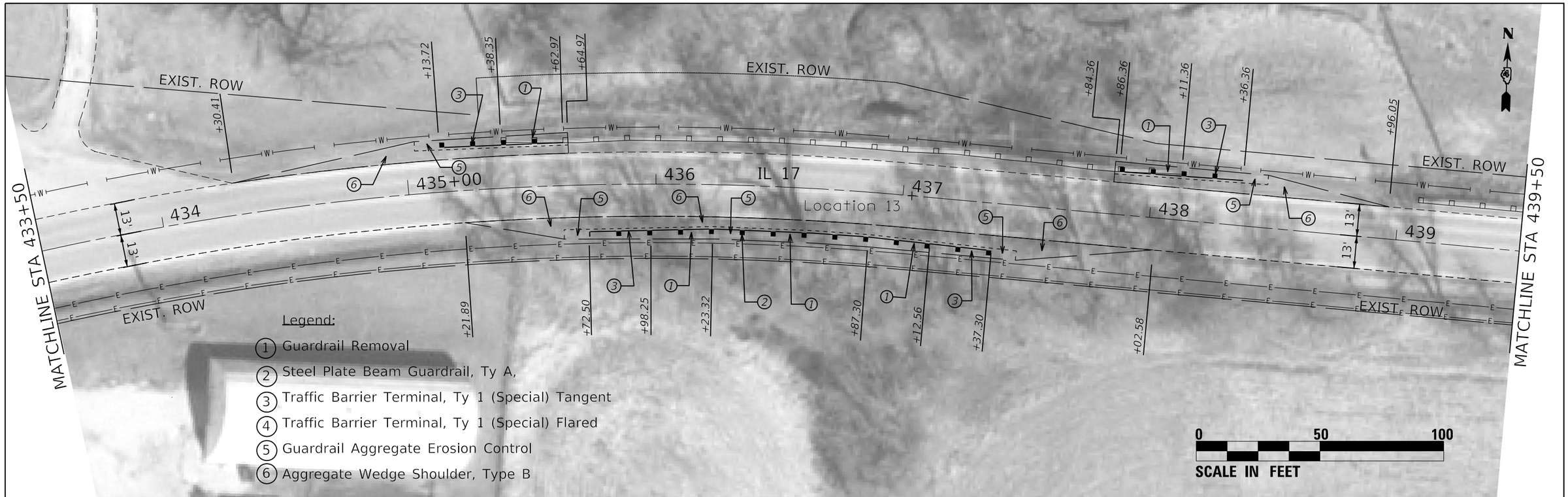

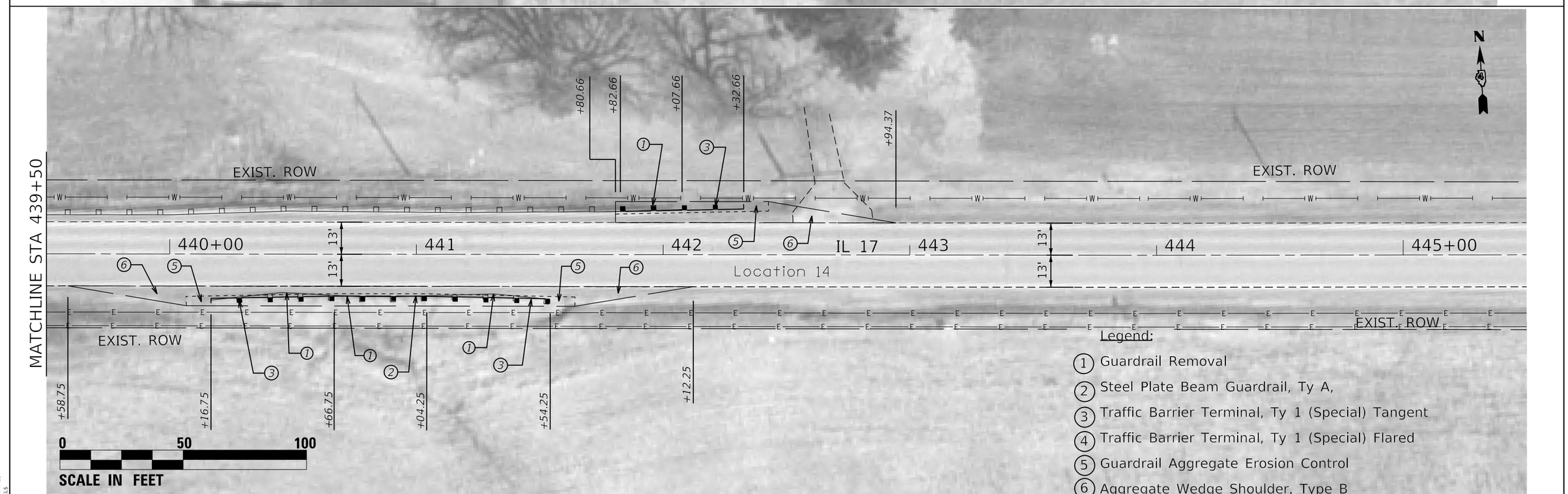

MODEL: $MODELNAME$
FILE NAME: $FILE$

USER NAME = $USER$	DESIGNED -	REVISED -
	DRAWN -	REVISED -
PLOT SCALE = $SCALE$	CHECKED -	REVISED -
PLOT DATE = $DATE$	DATE -	REVISED -

STATE OF ILLINOIS
DEPARTMENT OF TRANSPORTATION

CORRIDOR 1 (IL 17)
LOCATION 13 AND 14

SCALE: | SHEET OF SHEETS | STA. TO STA.

F.A. RTE.	SECTION	COUNTY	TOTAL SHEETS	SHEET NO.
VAR	D4 GUARDRAIL END SECT REPL 2020	VARIOUS	50	22

CONTRACT NO. 68F57

ILLINOIS | FED. AID PROJECT

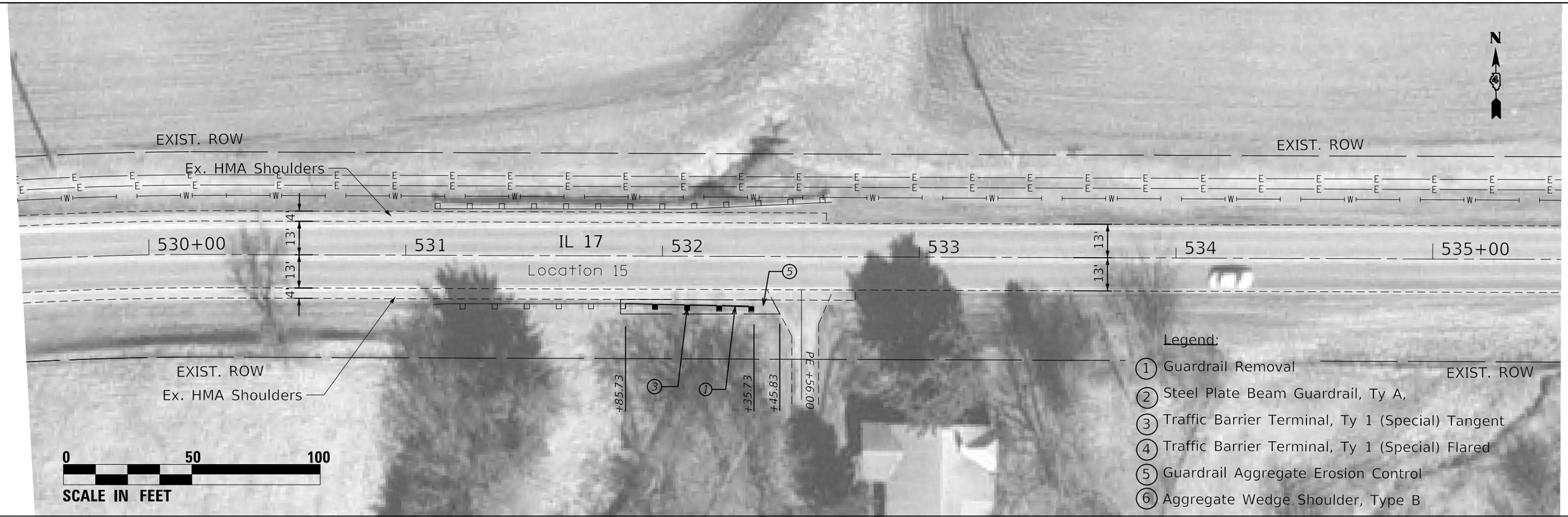

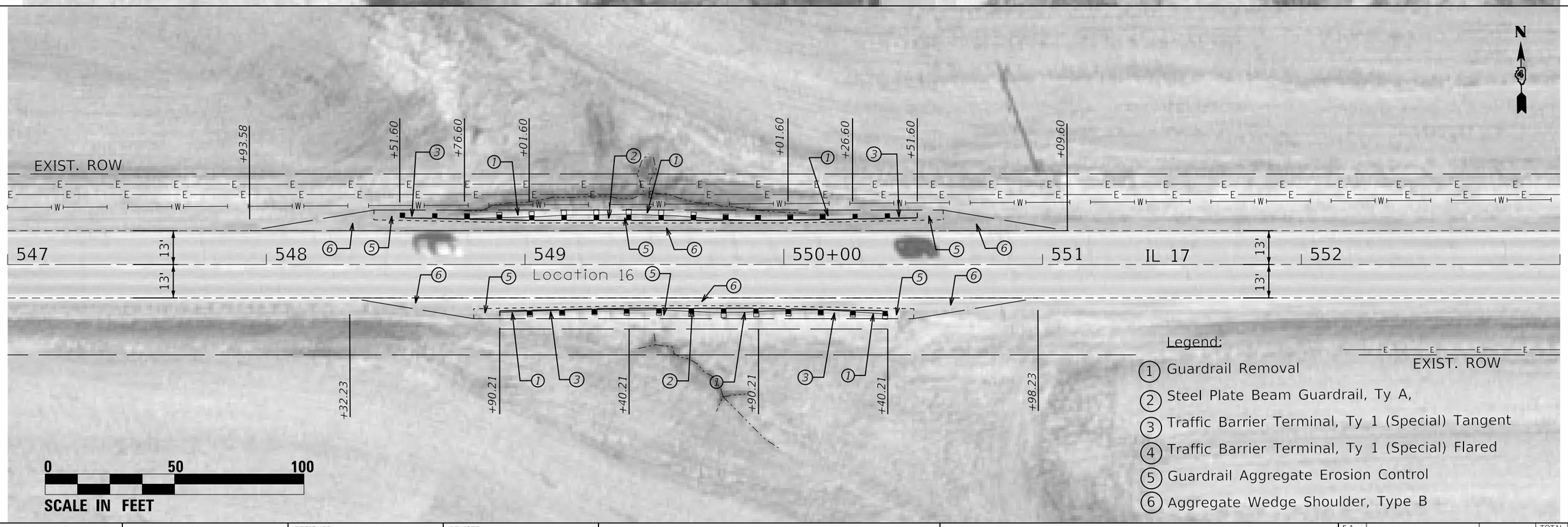

MODEL: $MODELNAME$
FILE NAME: $FILEL$

USER NAME = $USER$	DESIGNED -	REVISED -	
	DRAWN -	REVISED -	
PLOT SCALE = $SCALE$	CHECKED -	REVISED -	
PLOT DATE = $DATE$	DATE -	REVISED -	

STATE OF ILLINOIS
DEPARTMENT OF TRANSPORTATION

CORRIDOR 1 (IL 17)
LOCATION 15 AND 16

SCALE: | SHEET OF SHEETS | STA. TO STA.

F.A. RTE.	SECTION	COUNTY	TOTAL SHEETS	SHEET NO.
VAR	D4 GUARDRAIL END SECT REPL 2020	VARIOUS	50	23
		CONTRACT NO. 68F57		
	ILLINOIS	FED. AID PROJECT		

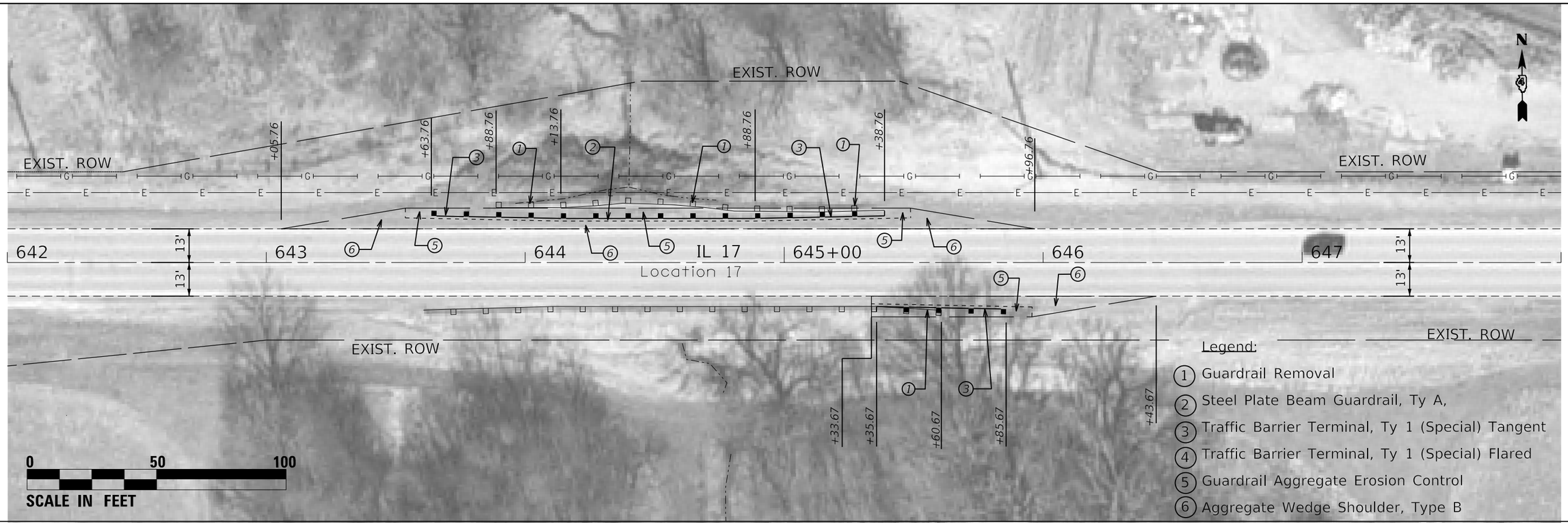

MODEL: $MODELNAME$
FILE NAME: $FILE$

USER NAME = $USER$	DESIGNED -	REVISED -
	DRAWN -	REVISED -
PLOT SCALE = $SCALE$	CHECKED -	REVISED -
PLOT DATE = $DATE$	DATE -	REVISED -

STATE OF ILLINOIS
DEPARTMENT OF TRANSPORTATION

CORRIDOR 1 (IL 17)
LOCATION 17 AND 18

SCALE: | SHEET OF SHEETS | STA. TO STA.

F.A. RTE.	SECTION	COUNTY	TOTAL SHEETS	SHEET NO.
VAR	D4 GUARDRAIL END SECT REPL 2020	VARIOUS	50	24
		CONTRACT NO. 68F57		
		ILLINOIS FED. AID PROJECT		

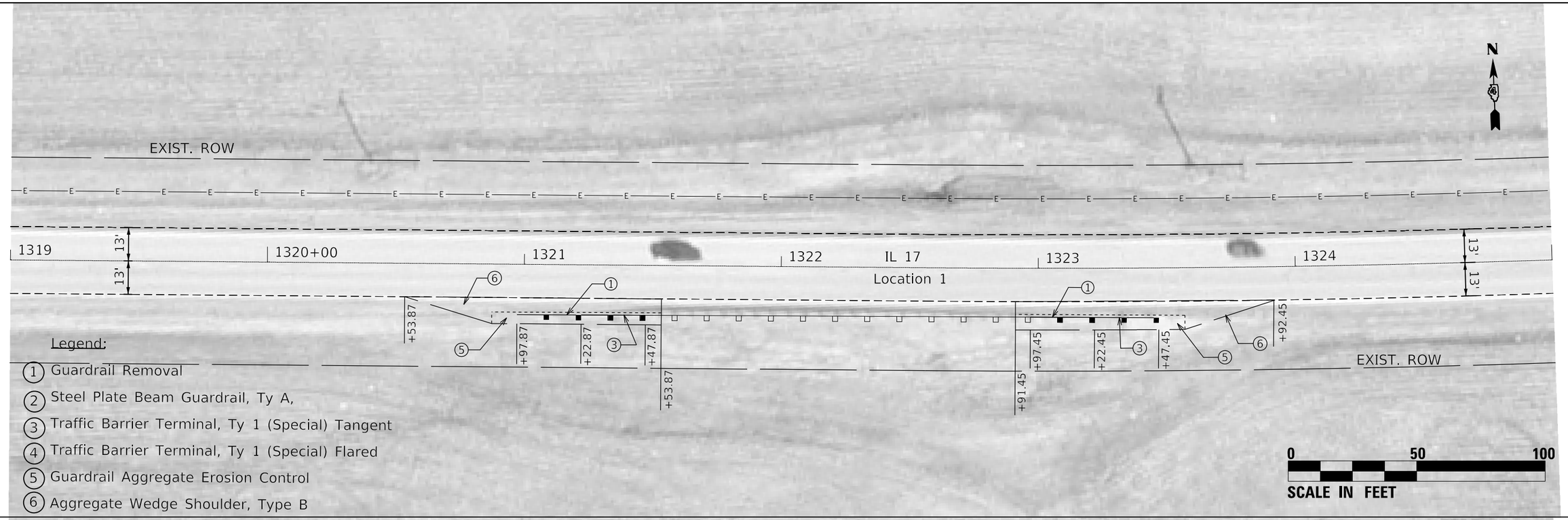

Legend:

1. Guardrail Removal
2. Steel Plate Beam Guardrail, Ty A,
3. Traffic Barrier Terminal, Ty 1 (Special) Tangent
4. Traffic Barrier Terminal, Ty 1 (Special) Flared
5. Guardrail Aggregate Erosion Control
6. Aggregate Wedge Shoulder, Type B

Legend:

1. Guardrail Removal
2. Steel Plate Beam Guardrail, Ty A,
3. Traffic Barrier Terminal, Ty 1 (Special) Tangent
4. Traffic Barrier Terminal, Ty 1 (Special) Flared
5. Guardrail Aggregate Erosion Control
6. Aggregate Wedge Shoulder, Type B

MODEL: $MODELNAME$
FILE NAME: $FILEL$

USER NAME = $USER$	DESIGNED -	REVISED -
	DRAWN -	REVISED -
PLOT SCALE = $SCALE$	CHECKED -	REVISED -
PLOT DATE = $DATE$	DATE -	REVISED -

STATE OF ILLINOIS
DEPARTMENT OF TRANSPORTATION

CORRIDOR 2 (IL 17)

SCALE: | SHEET OF SHEETS | STA. TO STA.

F.A. RTE.	SECTION	COUNTY	TOTAL SHEETS	SHEET NO.
VAR	D4 GUARDRAIL END SECT	VARIOUS	50	25

CONTRACT NO. 68F57

ILLINOIS | FED. AID PROJECT

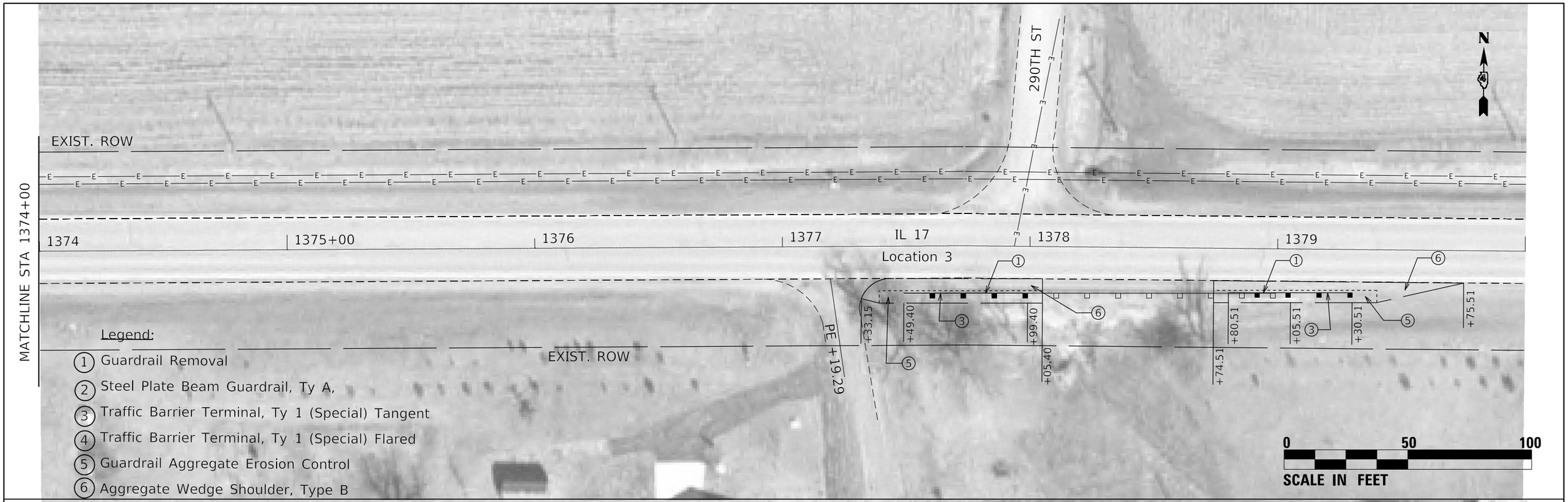

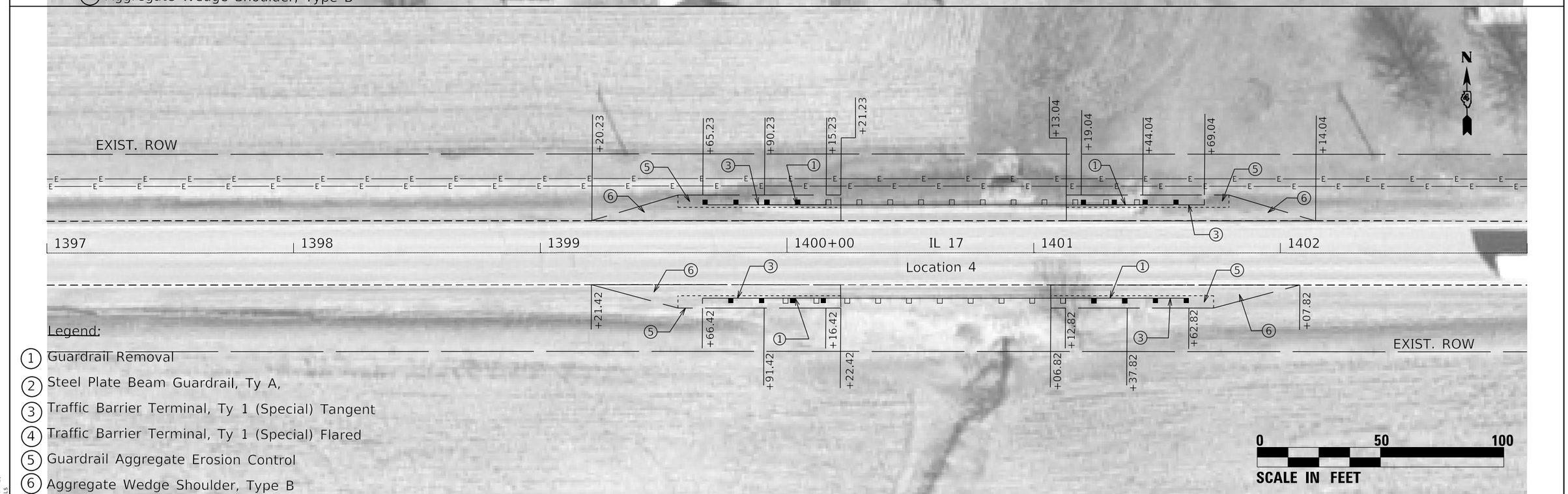

MODEL: $MODELNAME$
FILE NAME: $FILEL$

USER NAME = $USER$	DESIGNED -	REVISED -	STATE OF ILLINOIS DEPARTMENT OF TRANSPORTATION
	DRAWN -	REVISED -	
PLOT SCALE = $SCALE$	CHECKED -	REVISED -	
PLOT DATE = $DATE$	DATE -	REVISED -	

CORRIDOR 2 (IL 17)
LOCATIONS 3 & 4

SCALE: SHEET OF SHEETS STA. TO STA.

F.A. RTE.	SECTION	COUNTY	TOTAL SHEETS	SHEET NO.
VAR	D4 GUARDRAIL END SECT REPL 2020	VARIOUS	50	26
		CONTRACT NO. 68F57		
	ILLINOIS	FED. AID PROJECT		

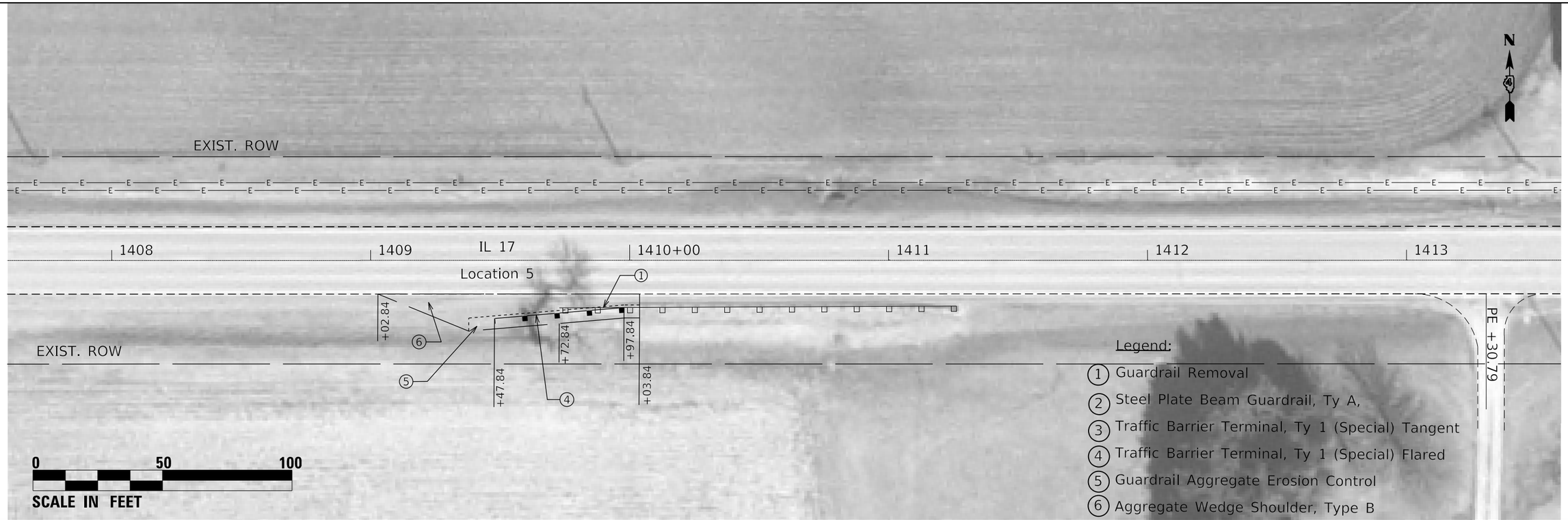

Legend:

1. Guardrail Removal
2. Steel Plate Beam Guardrail, Ty A,
3. Traffic Barrier Terminal, Ty 1 (Special) Tangent
4. Traffic Barrier Terminal, Ty 1 (Special) Flared
5. Guardrail Aggregate Erosion Control
6. Aggregate Wedge Shoulder, Type B

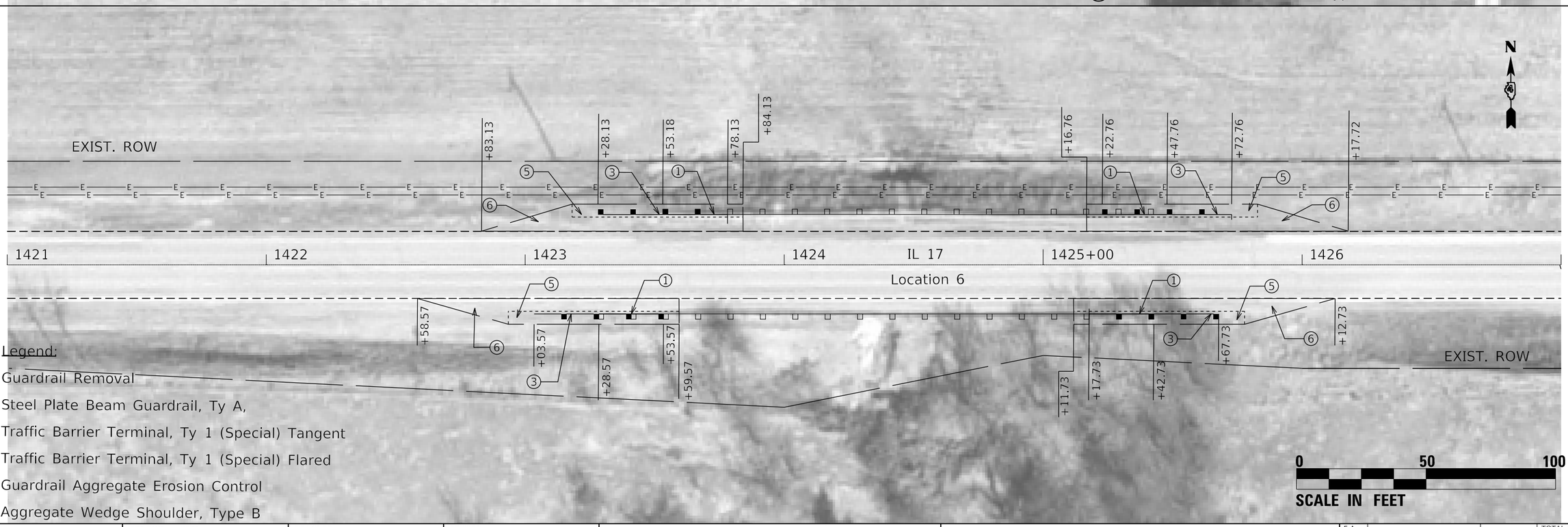

Legend:

1. Guardrail Removal
2. Steel Plate Beam Guardrail, Ty A,
3. Traffic Barrier Terminal, Ty 1 (Special) Tangent
4. Traffic Barrier Terminal, Ty 1 (Special) Flared
5. Guardrail Aggregate Erosion Control
6. Aggregate Wedge Shoulder, Type B

MODEL: $MODELNAME$
FILE NAME: $FILEL$

USER NAME = $USER$	DESIGNED -	REVISED -	
	DRAWN -	REVISED -	
PLOT SCALE = $SCALE$	CHECKED -	REVISED -	
PLOT DATE = $DATE$	DATE -	REVISED -	

STATE OF ILLINOIS
DEPARTMENT OF TRANSPORTATION

CORRIDOR 2 (IL 17)
LOCATIONS 5 & 6

SCALE: | SHEET OF SHEETS | STA. TO STA.

F.A. RTE.	SECTION	COUNTY	TOTAL SHEETS	SHEET NO.
VAR	D4 GUARDRAIL END SECT REPL 2020	VARIOUS	50	27
		CONTRACT NO. 68F57		
	ILLINOIS	FED. AID PROJECT		

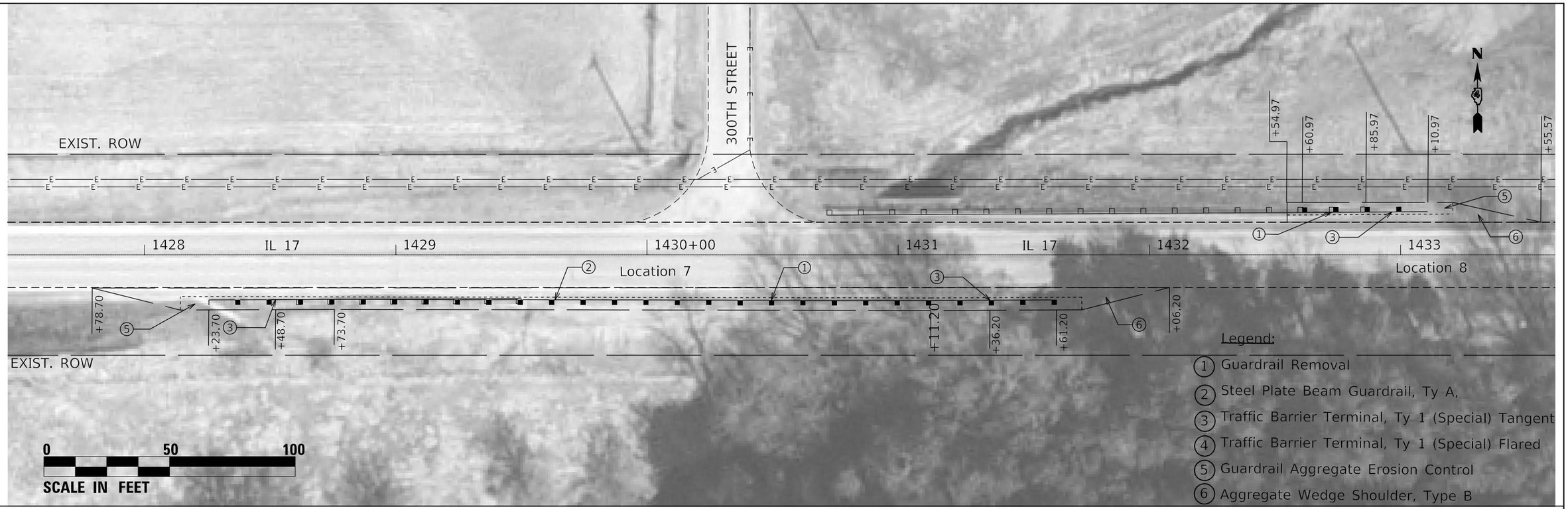

MODEL: $MODELNAME$
FILE NAME: $FILEL$

USER NAME = $USER$	DESIGNED -	REVISED -	
	DRAWN -	REVISED -	
PLOT SCALE = $SCALE$	CHECKED -	REVISED -	
PLOT DATE = $DATE$	DATE -	REVISED -	

STATE OF ILLINOIS
DEPARTMENT OF TRANSPORTATION

CORRIDOR 2 (IL 17)
LOCATIONS 7 & 8

SCALE: SHEET OF SHEETS STA. TO STA.

F.A. RTE.	SECTION	COUNTY	TOTAL SHEETS	SHEET NO.
VAR	D4 GUARDRAIL END SECT REPL 2020	VARIOUS	50	28
		CONTRACT NO. 68F57		
	ILLINOIS	FED. AID PROJECT		

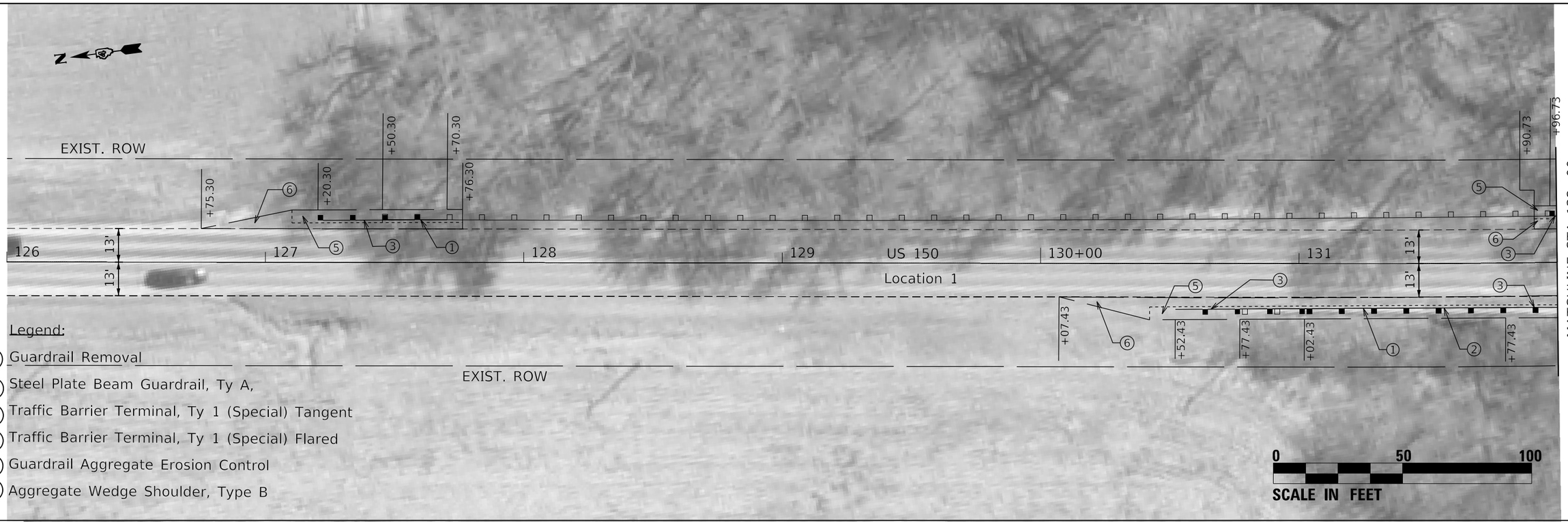

Legend:

1. Guardrail Removal
2. Steel Plate Beam Guardrail, Ty A,
3. Traffic Barrier Terminal, Ty 1 (Special) Tangent
4. Traffic Barrier Terminal, Ty 1 (Special) Flared
5. Guardrail Aggregate Erosion Control
6. Aggregate Wedge Shoulder, Type B

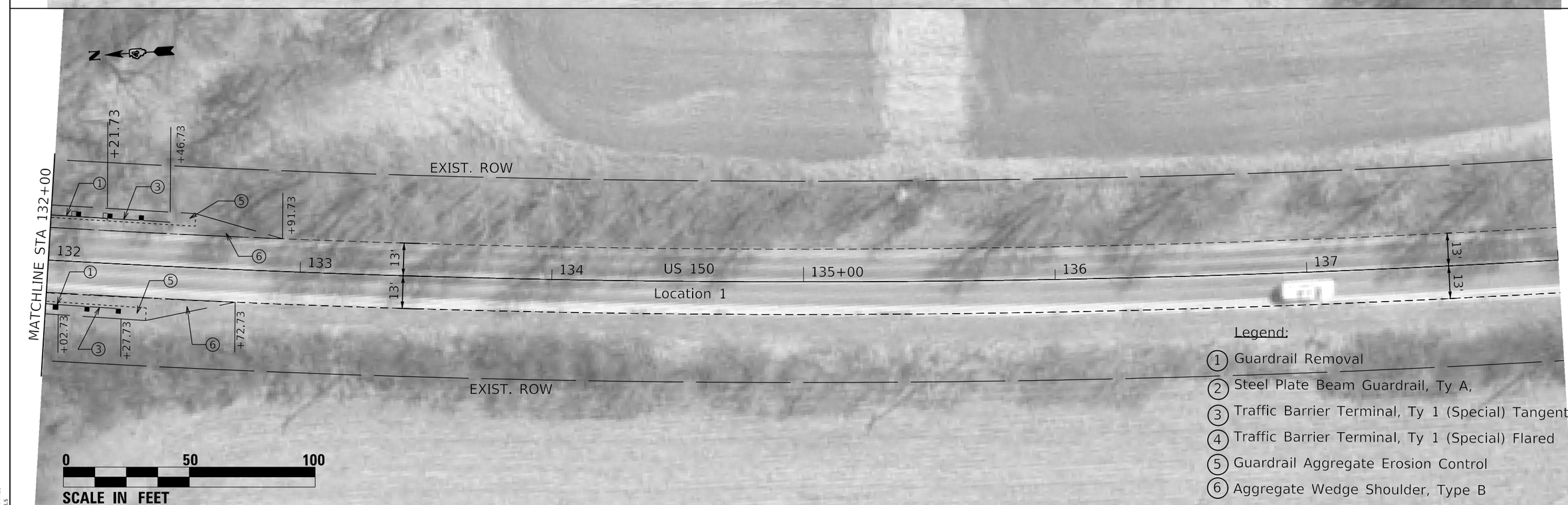

Legend:

1. Guardrail Removal
2. Steel Plate Beam Guardrail, Ty A,
3. Traffic Barrier Terminal, Ty 1 (Special) Tangent
4. Traffic Barrier Terminal, Ty 1 (Special) Flared
5. Guardrail Aggregate Erosion Control
6. Aggregate Wedge Shoulder, Type B

MODEL: $MODELNAME$
FILE NAME: $FILE$

USER NAME = $USER$	DESIGNED -	REVISED -
	DRAWN -	REVISED -
PLOT SCALE = $SCALE$	CHECKED -	REVISED -
PLOT DATE = $DATE$	DATE -	REVISED -

STATE OF ILLINOIS
DEPARTMENT OF TRANSPORTATION

CORRIDOR 3 (US 150)
LOCATION 1

SCALE: | SHEET OF SHEETS | STA. TO STA.

F.A. RTE.	SECTION	COUNTY	TOTAL SHEETS	SHEET NO.
VAR	D4 GUARDRAIL END SECT REPL 2020	VARIOUS	50	29

CONTRACT NO. 68F57

ILLINOIS | FED. AID PROJECT

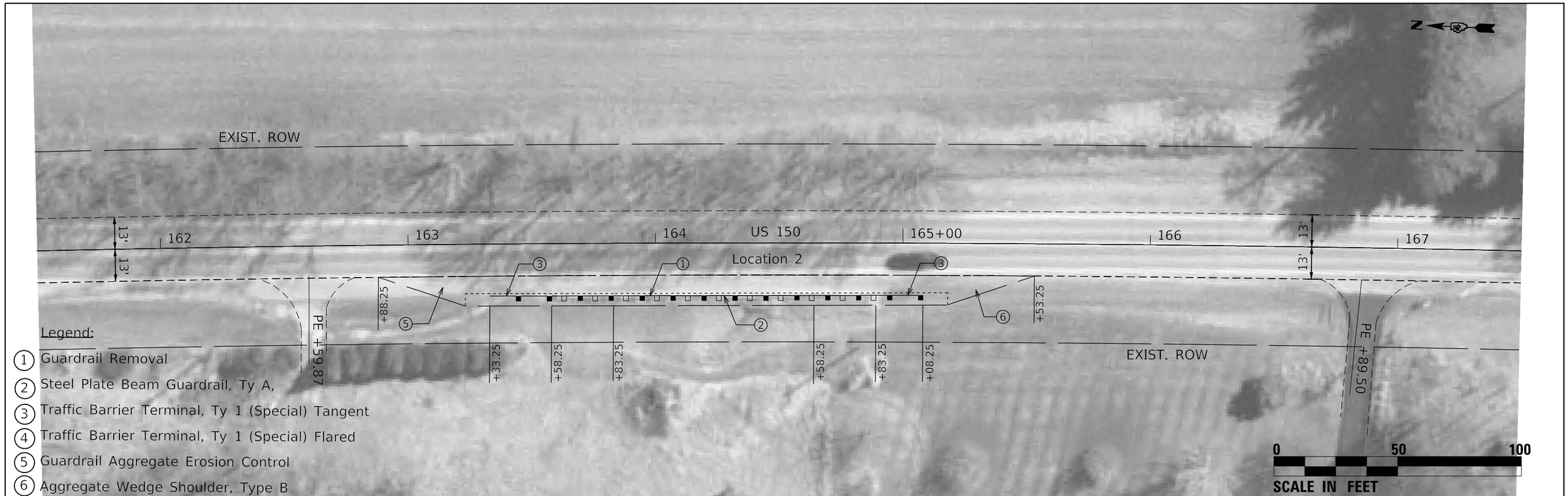

Legend:

1. Guardrail Removal
2. Steel Plate Beam Guardrail, Ty A,
3. Traffic Barrier Terminal, Ty 1 (Special) Tangent
4. Traffic Barrier Terminal, Ty 1 (Special) Flared
5. Guardrail Aggregate Erosion Control
6. Aggregate Wedge Shoulder, Type B

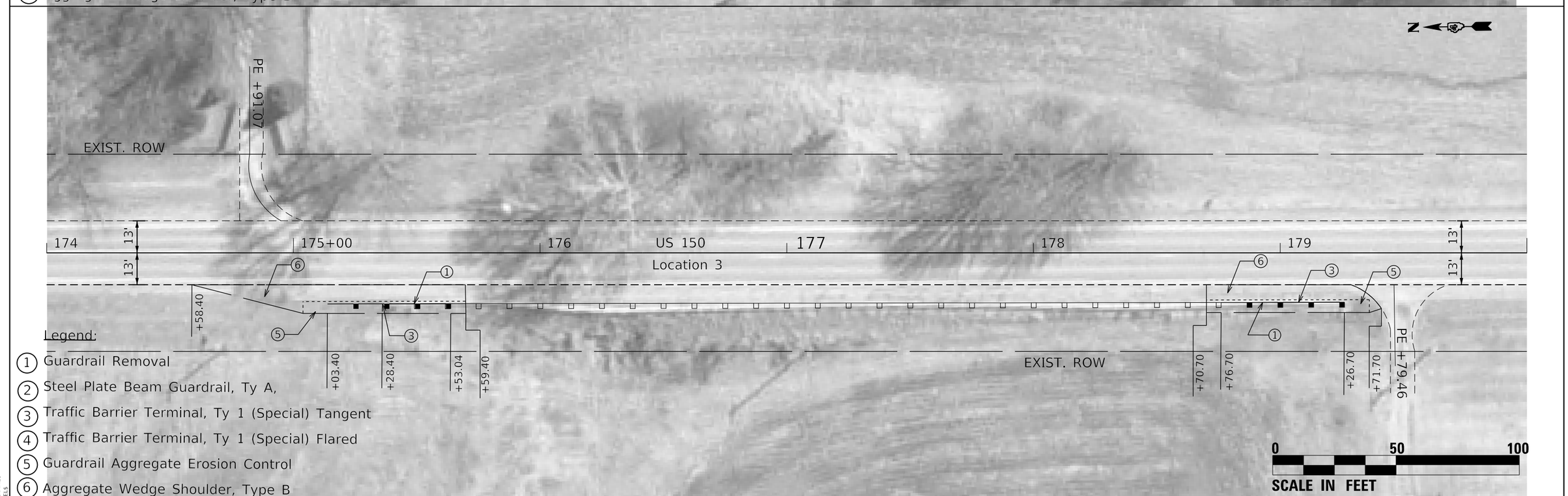

Legend:

1. Guardrail Removal
2. Steel Plate Beam Guardrail, Ty A,
3. Traffic Barrier Terminal, Ty 1 (Special) Tangent
4. Traffic Barrier Terminal, Ty 1 (Special) Flared
5. Guardrail Aggregate Erosion Control
6. Aggregate Wedge Shoulder, Type B

MODEL: $MODELNAME$
FILE NAME: $FILEL$

USER NAME = $USER$	DESIGNED -	REVISED -	STATE OF ILLINOIS DEPARTMENT OF TRANSPORTATION
	DRAWN -	REVISED -	
PLOT SCALE = $SCALE$	CHECKED -	REVISED -	
PLOT DATE = $DATE$	DATE -	REVISED -	

CORRIDOR 3 (US 150)
LOCATIONS 2 & 3

SCALE: SHEET OF SHEETS STA. TO STA.

F.A. RTE.	SECTION	COUNTY	TOTAL SHEETS	SHEET NO.
VAR	D4 GUARDRAIL END SECT REPL 2020	VARIOUS	50	30
		CONTRACT NO. 68F57		
	ILLINOIS	FED. AID PROJECT		

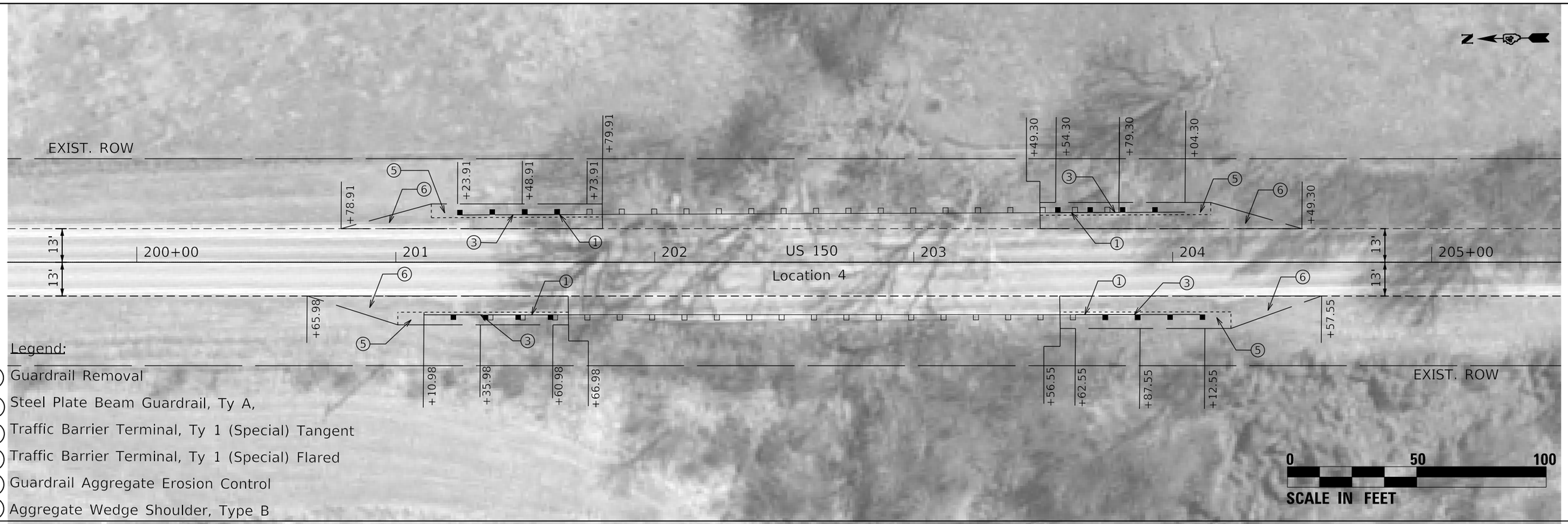

Legend:

1. Guardrail Removal
2. Steel Plate Beam Guardrail, Ty A,
3. Traffic Barrier Terminal, Ty 1 (Special) Tangent
4. Traffic Barrier Terminal, Ty 1 (Special) Flared
5. Guardrail Aggregate Erosion Control
6. Aggregate Wedge Shoulder, Type B

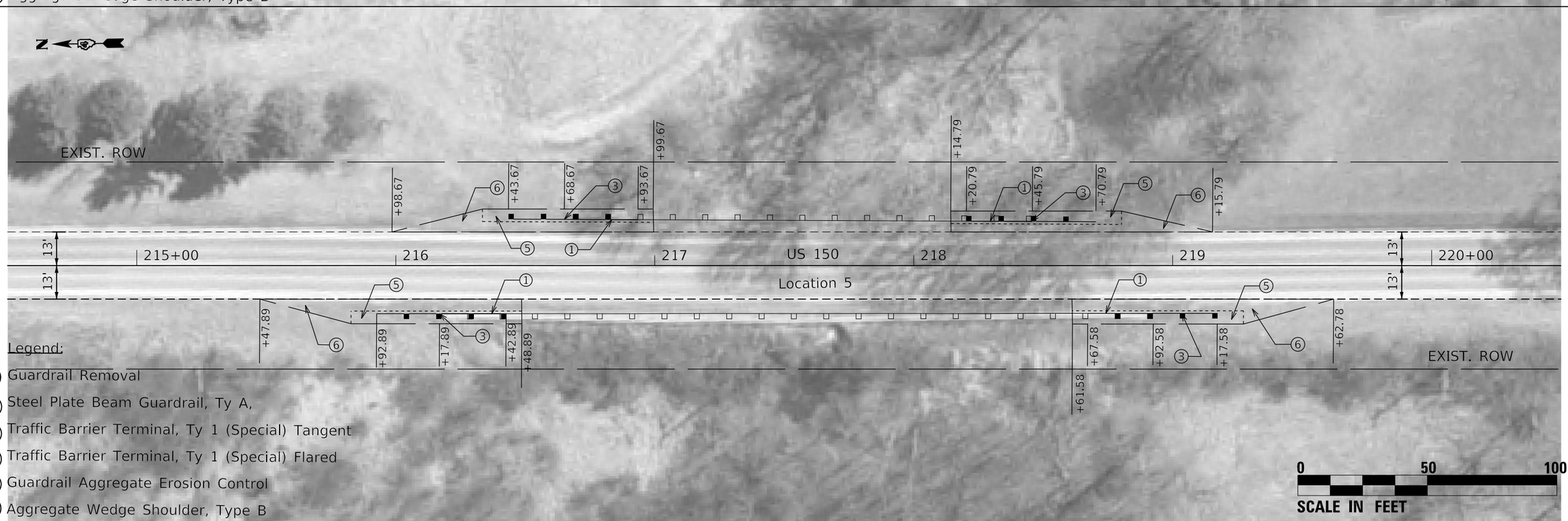

Legend:

1. Guardrail Removal
2. Steel Plate Beam Guardrail, Ty A,
3. Traffic Barrier Terminal, Ty 1 (Special) Tangent
4. Traffic Barrier Terminal, Ty 1 (Special) Flared
5. Guardrail Aggregate Erosion Control
6. Aggregate Wedge Shoulder, Type B

MODEL: $MODELNAME$
FILE NAME: $FILEL$

USER NAME = $USER$	DESIGNED -	REVISED -
	DRAWN -	REVISED -
PLOT SCALE = $SCALE$	CHECKED -	REVISED -
PLOT DATE = $DATE$	DATE -	REVISED -

STATE OF ILLINOIS
DEPARTMENT OF TRANSPORTATION

CORRIDOR 3 (US 150)
LOCATIONS 4 & 5

SCALE: | SHEET OF SHEETS | STA. TO STA.

F.A. RTE.	SECTION	COUNTY	TOTAL SHEETS	SHEET NO.
VAR	D4 GUARDRAIL END SECT REPL 2020	VARIOUS	50	31
		CONTRACT NO. 68F57		
	ILLINOIS	FED. AID PROJECT		

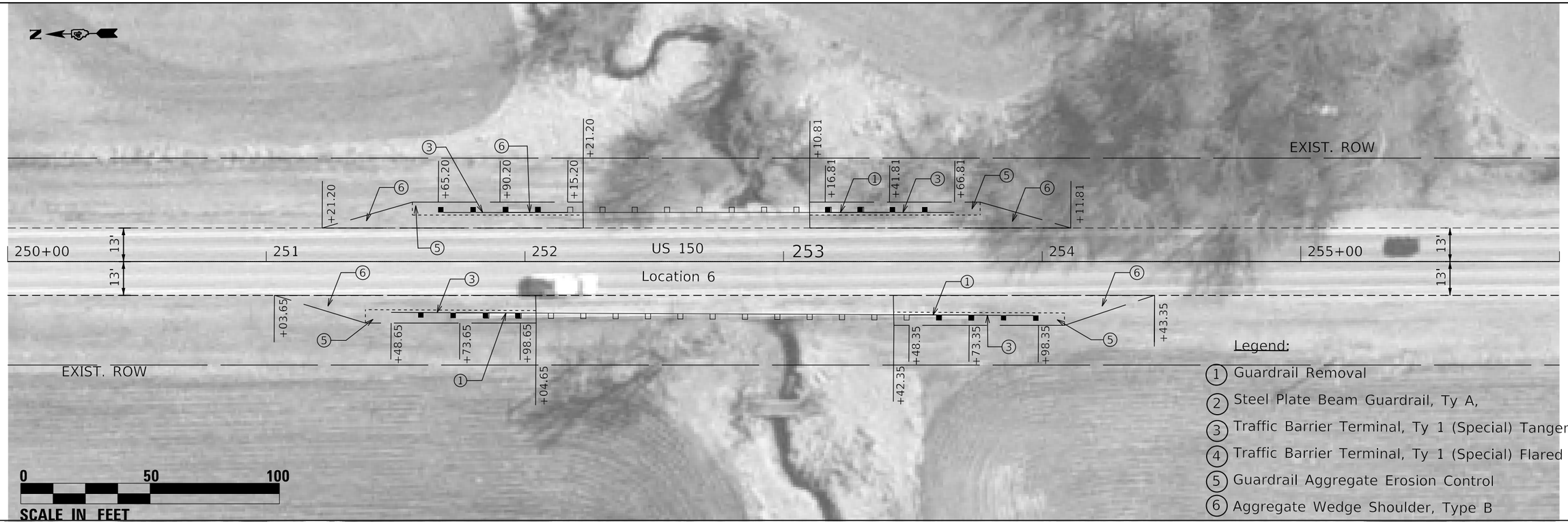

Legend:

1. Guardrail Removal
2. Steel Plate Beam Guardrail, Ty A,
3. Traffic Barrier Terminal, Ty 1 (Special) Tangent
4. Traffic Barrier Terminal, Ty 1 (Special) Flared
5. Guardrail Aggregate Erosion Control
6. Aggregate Wedge Shoulder, Type B

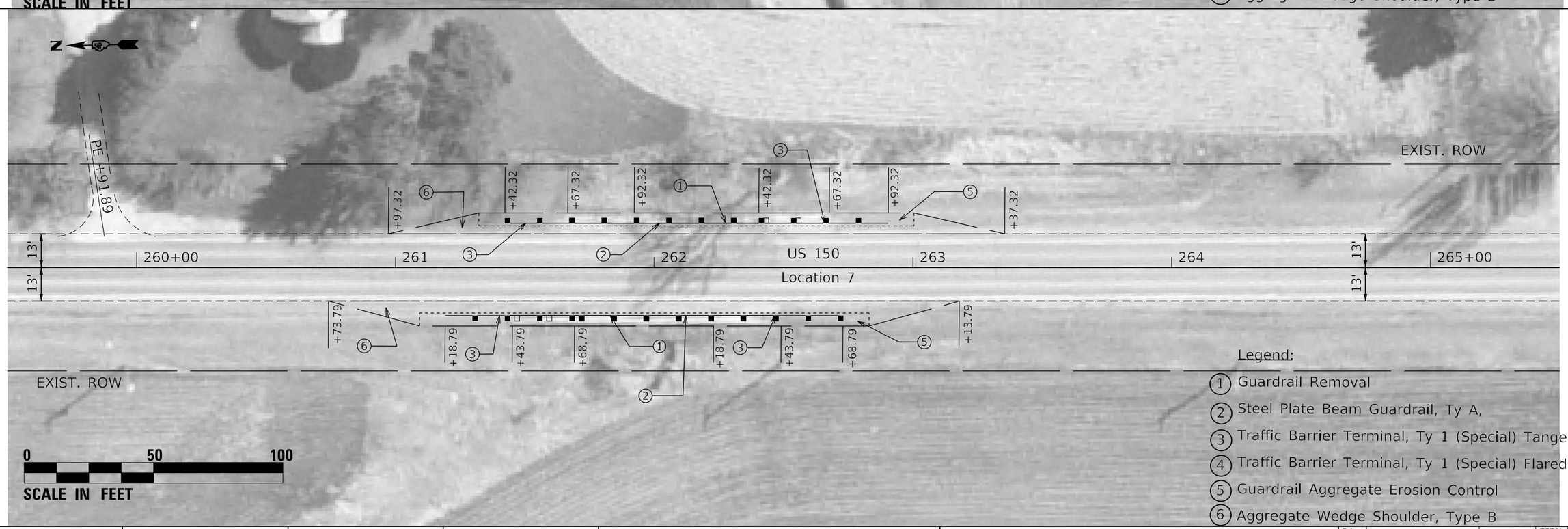

Legend:

1. Guardrail Removal
2. Steel Plate Beam Guardrail, Ty A,
3. Traffic Barrier Terminal, Ty 1 (Special) Tangent
4. Traffic Barrier Terminal, Ty 1 (Special) Flared
5. Guardrail Aggregate Erosion Control
6. Aggregate Wedge Shoulder, Type B

MODEL: $MODELNAME$
FILE NAME: $FILE$

USER NAME = $USER$	DESIGNED -	REVISED -
	DRAWN -	REVISED -
PLOT SCALE = $SCALE$	CHECKED -	REVISED -
PLOT DATE = $DATE$	DATE -	REVISED -

STATE OF ILLINOIS
DEPARTMENT OF TRANSPORTATION

CORRIDOR 3 (US 150)
LOCATIONS 6 &7

SCALE: | SHEET OF SHEETS | STA. TO STA.

F.A. RTE.	SECTION	COUNTY	TOTAL SHEETS	SHEET NO.
VAR	D4 GUARDRAIL END SECT REPL 2020	VARIOUS	50	32

CONTRACT NO. 68F57

ILLINOIS FED. AID PROJECT

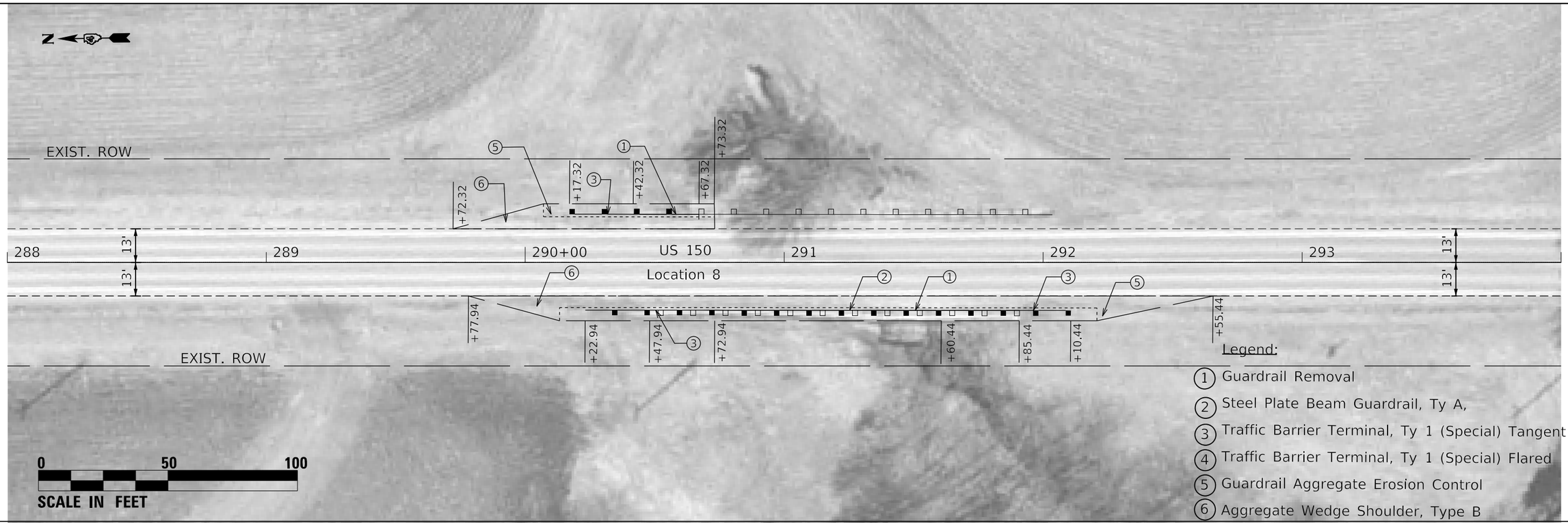

Legend:

1. Guardrail Removal
2. Steel Plate Beam Guardrail, Ty A,
3. Traffic Barrier Terminal, Ty 1 (Special) Tangent
4. Traffic Barrier Terminal, Ty 1 (Special) Flared
5. Guardrail Aggregate Erosion Control
6. Aggregate Wedge Shoulder, Type B

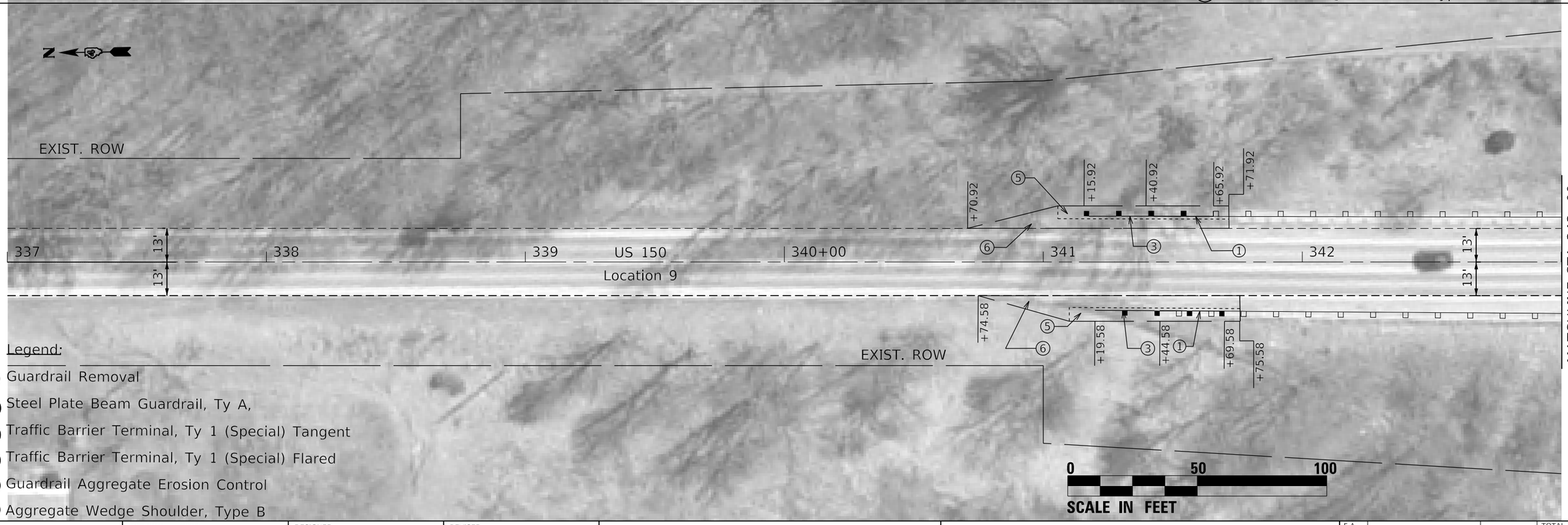

Legend:

1. Guardrail Removal
2. Steel Plate Beam Guardrail, Ty A,
3. Traffic Barrier Terminal, Ty 1 (Special) Tangent
4. Traffic Barrier Terminal, Ty 1 (Special) Flared
5. Guardrail Aggregate Erosion Control
6. Aggregate Wedge Shoulder, Type B

MODEL: $MODELNAME$
FILE NAME: $FILE$

USER NAME = $USER$	DESIGNED -	REVISED -
	DRAWN -	REVISED -
PLOT SCALE = $SCALE$	CHECKED -	REVISED -
PLOT DATE = $DATE$	DATE -	REVISED -

STATE OF ILLINOIS
DEPARTMENT OF TRANSPORTATION

CORRIDOR 3 (US 150)
LOCATIONS 8 & 9

SCALE: | SHEET OF SHEETS | STA. TO STA.

F.A. RTE.	SECTION	COUNTY	TOTAL SHEETS	SHEET NO.
VAR	D4 GUARDRAIL END SECT REPL 2020	VARIOUS	50	33

CONTRACT NO. 68F57

ILLINOIS | FED. AID PROJECT

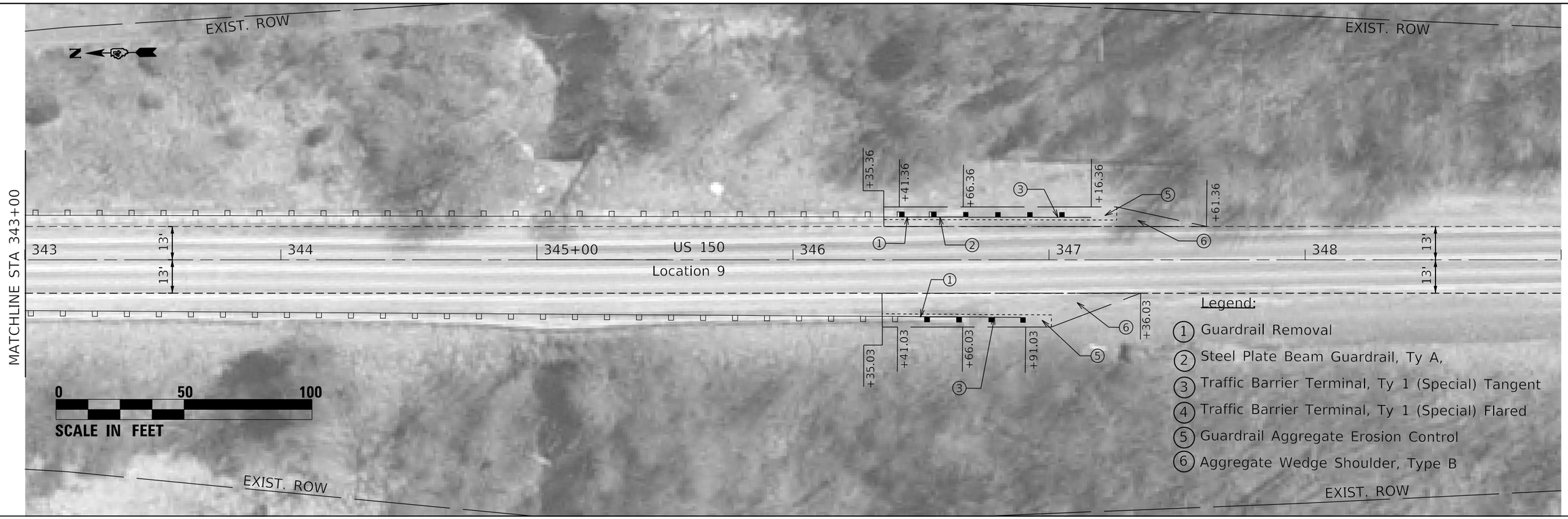

MODEL: $MODELNAME$
FILE NAME: $FILEL$

USER NAME = $USER$	DESIGNED -	REVISED -	
	DRAWN -	REVISED -	
PLOT SCALE = $SCALE$	CHECKED -	REVISED -	
PLOT DATE = $DATE$	DATE -	REVISED -	

STATE OF ILLINOIS
DEPARTMENT OF TRANSPORTATION

CORRIDOR 3 (US 150)
LOCATION 9

SCALE: SHEET OF SHEETS STA. TO STA.

F.A. RTE.	SECTION	COUNTY	TOTAL SHEETS	SHEET NO.
VAR	D4 GUARDRAIL END SECT REPL 2020	VARIOUS	50	34
		CONTRACT NO. 68F57		
	ILLINOIS	FED. AID PROJECT		

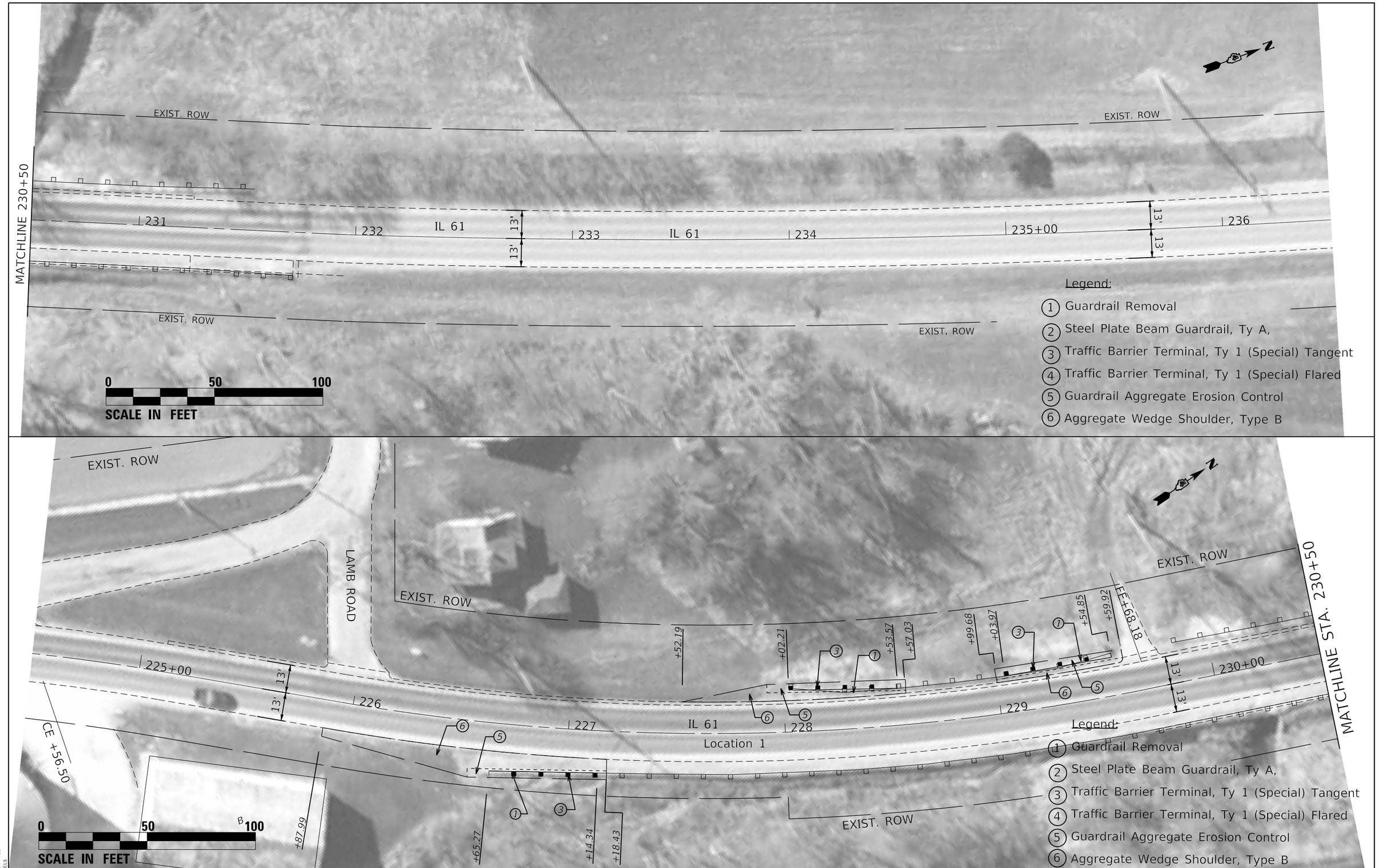

MODEL: $MODELNAME$
FILE NAME: $FILEL$

USER NAME = $USER$	DESIGNED -	REVISED -
	DRAWN -	REVISED -
PLOT SCALE = $SCALE$	CHECKED -	REVISED -
PLOT DATE = $DATE$	DATE -	REVISED -

STATE OF ILLINOIS
DEPARTMENT OF TRANSPORTATION

CORRIDOR 4 (IL 61)
LOCATIONS 1

SCALE: SHEET OF SHEETS STA. TO STA.

F.A. RTE.	SECTION	COUNTY	TOTAL SHEETS	SHEET NO.
VAR	D4 GUARDRAIL END SECT REPL 2020	VARIOUS	50	35

CONTRACT NO. 68F57

ILLINOIS FED. AID PROJECT

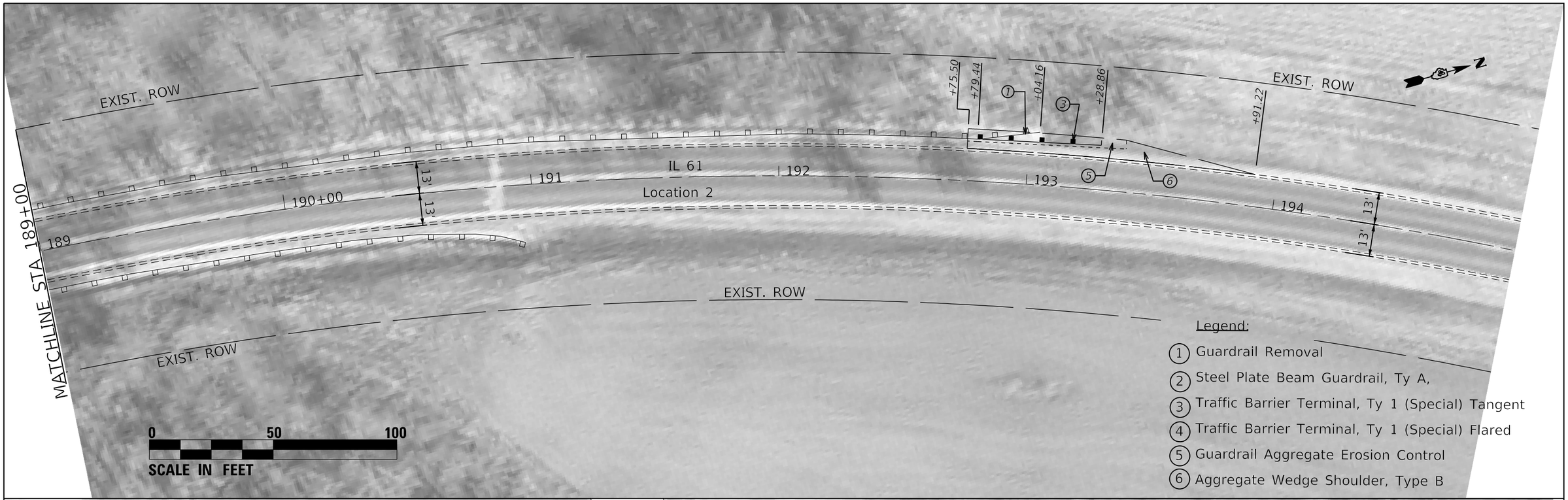

MODEL: $MODELNAME$
FILE NAME: $FILE$

USER NAME = $USER$	DESIGNED -	REVISED -
	DRAWN -	REVISED -
PLOT SCALE = $SCALE$	CHECKED -	REVISED -
PLOT DATE = $DATE$	DATE -	REVISED -

STATE OF ILLINOIS
DEPARTMENT OF TRANSPORTATION

CORRIDOR 4 (IL 61)
LOCATION 2

SCALE: SHEET OF SHEETS STA. TO STA.

F.A. RTE.	SECTION	COUNTY	TOTAL SHEETS	SHEET NO.
VAR	D4 GUARDRAIL END SECT REPL 2020	VARIOUS	50	36

CONTRACT NO. 68F57

ILLINOIS FED. AID PROJECT

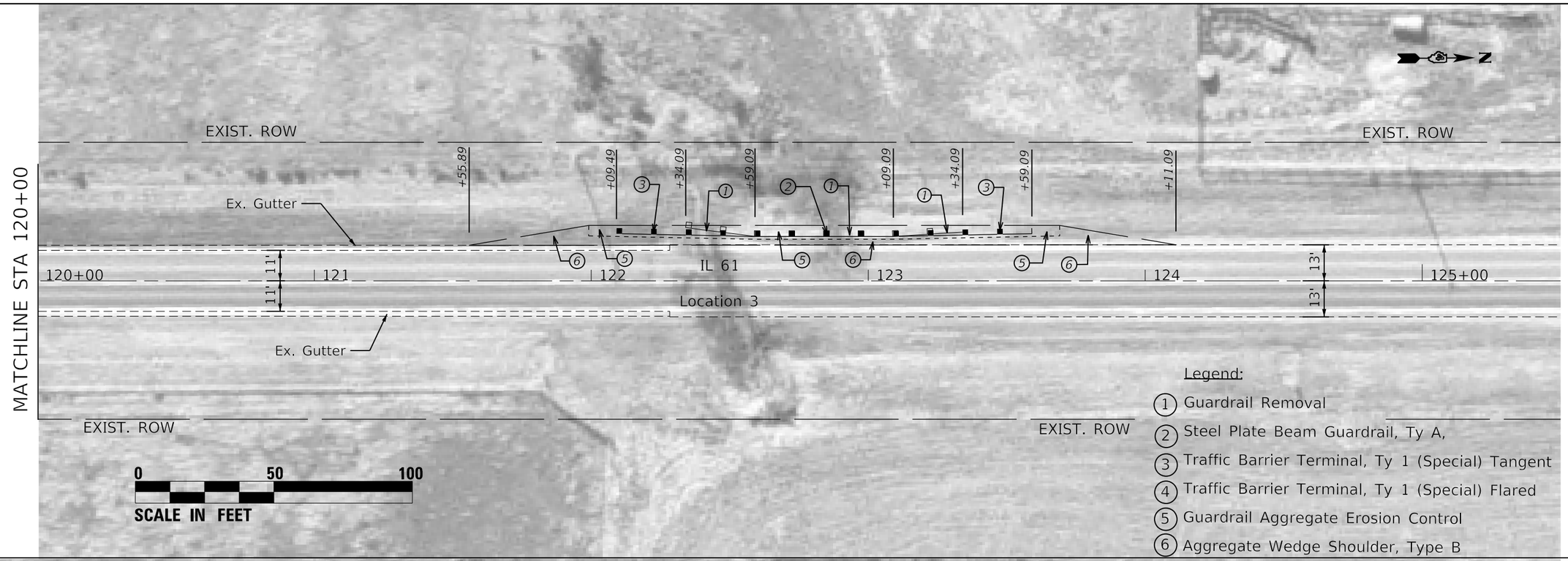

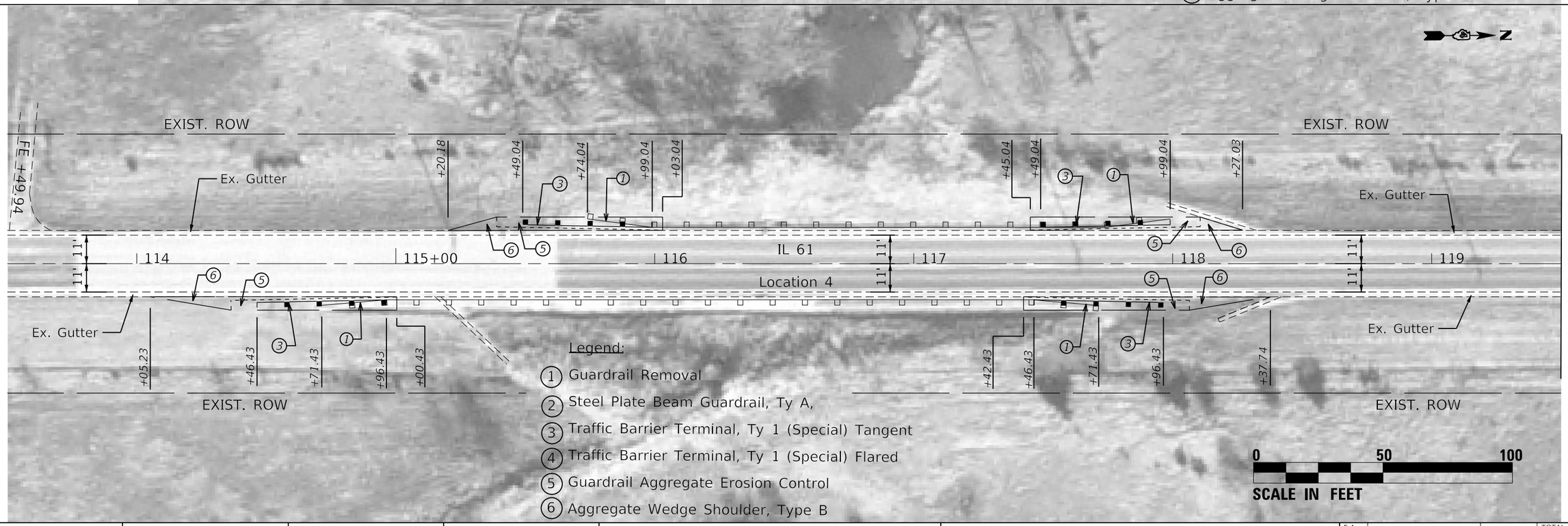

MODEL: $MODELNAME$
FILE NAME: $FILEL$

USER NAME = $USER$	DESIGNED -	REVISED -	STATE OF ILLINOIS DEPARTMENT OF TRANSPORTATION
	DRAWN -	REVISED -	
PLOT SCALE = $SCALE$	CHECKED -	REVISED -	
PLOT DATE = $DATE$	DATE -	REVISED -	

CORRIDOR 4 (IL 61)
LOCATIONS 3 & 4

SCALE: SHEET OF SHEETS STA. TO STA.

F.A. RTE.	SECTION	COUNTY	TOTAL SHEETS	SHEET NO.
VAR	D4 GUARDRAIL END SECT REPL 2020	VARIOUS	50	37
		CONTRACT NO. 68F57		
	ILLINOIS	FED. AID PROJECT		

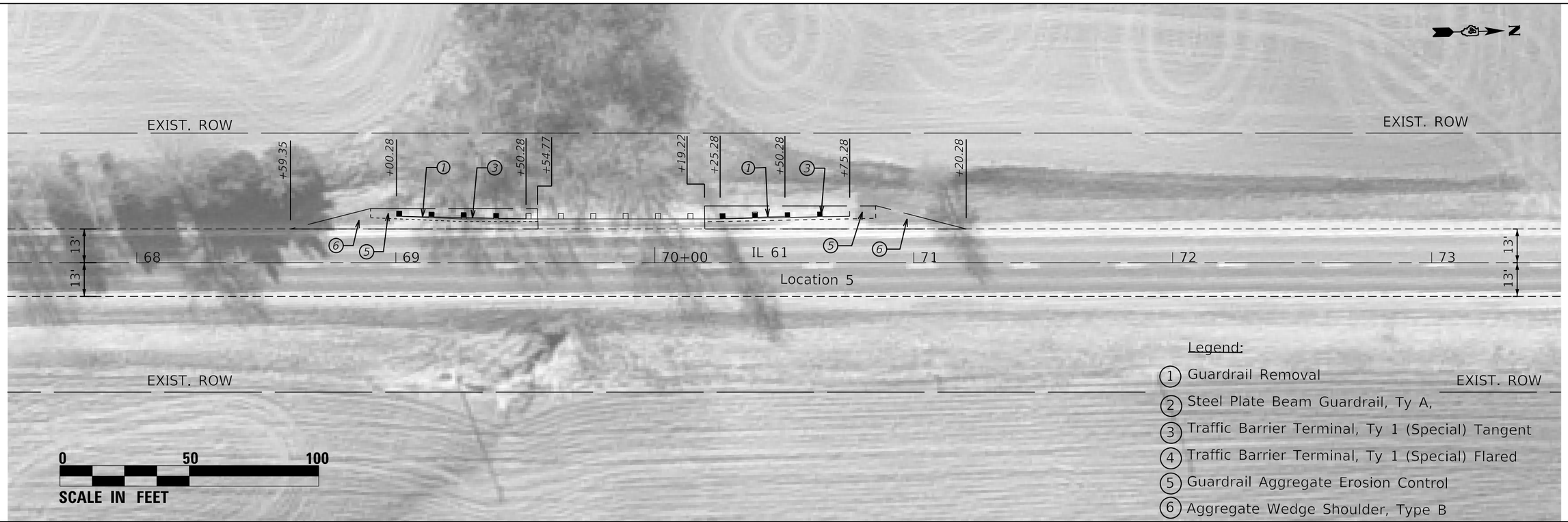

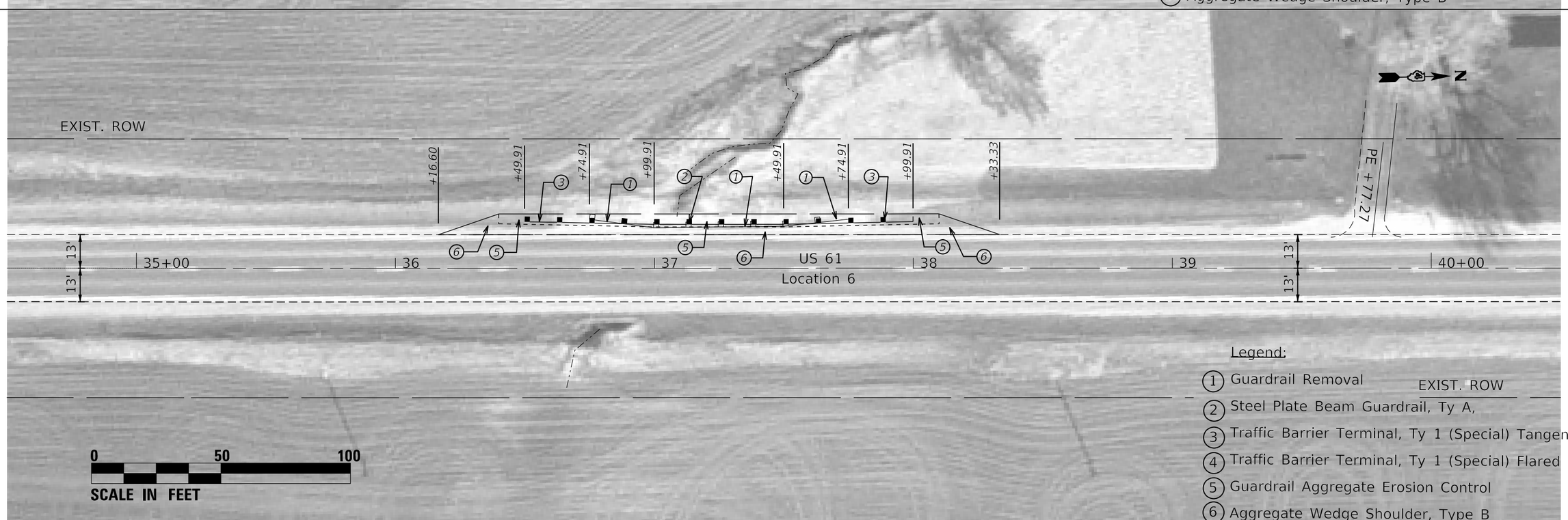

MODEL: $MODELNAME$
FILE NAME: $FILE$

USER NAME = $USER$	DESIGNED -	REVISED -
	DRAWN -	REVISED -
PLOT SCALE = $SCALE$	CHECKED -	REVISED -
PLOT DATE = $DATE$	DATE -	REVISED -

STATE OF ILLINOIS
DEPARTMENT OF TRANSPORTATION

CORRIDOR 4 (IL 61)
LOCATIONS 5 & 6

SCALE: | SHEET OF SHEETS | STA. TO STA.

F.A. RTE.	SECTION	COUNTY	TOTAL SHEETS	SHEET NO.
VAR	D4 GUARDRAIL END SECT REPL 2020	VARIOUS	50	38

CONTRACT NO. 68F57

ILLINOIS | FED. AID PROJECT

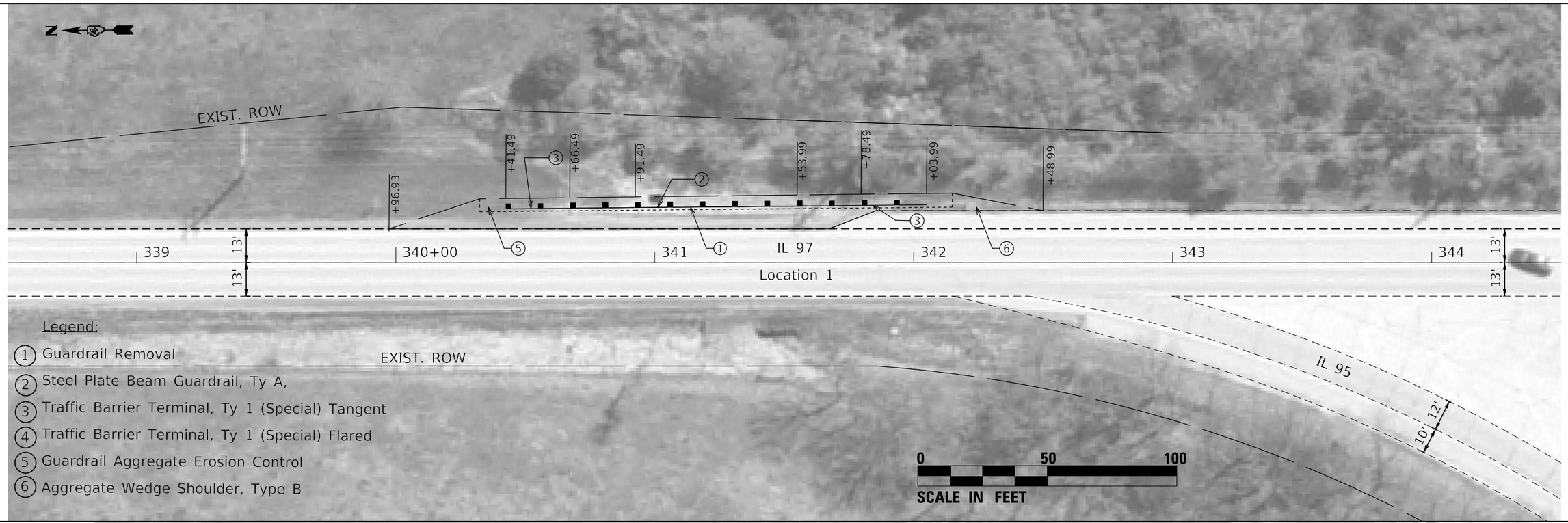

Legend:

1. Guardrail Removal
2. Steel Plate Beam Guardrail, Ty A,
3. Traffic Barrier Terminal, Ty 1 (Special) Tangent
4. Traffic Barrier Terminal, Ty 1 (Special) Flared
5. Guardrail Aggregate Erosion Control
6. Aggregate Wedge Shoulder, Type B

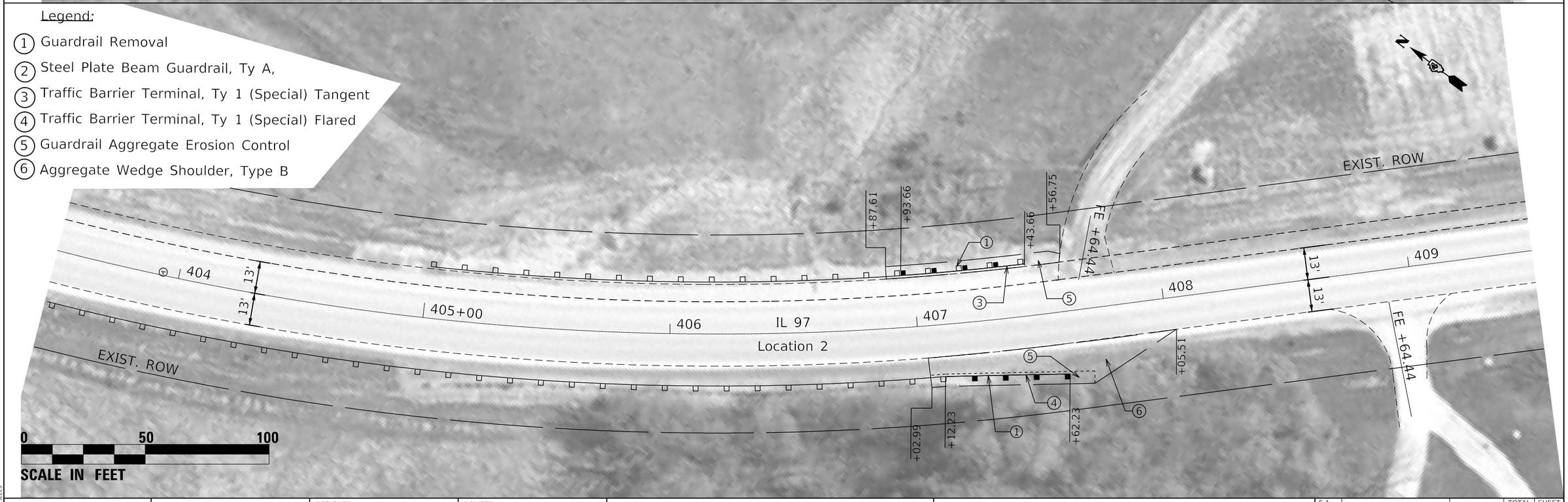

Legend:

1. Guardrail Removal
2. Steel Plate Beam Guardrail, Ty A,
3. Traffic Barrier Terminal, Ty 1 (Special) Tangent
4. Traffic Barrier Terminal, Ty 1 (Special) Flared
5. Guardrail Aggregate Erosion Control
6. Aggregate Wedge Shoulder, Type B

MODEL: $MODELNAME$
FILE NAME: $FILE$

USER NAME = $USER$	DESIGNED -	REVISED -
	DRAWN -	REVISED -
PLOT SCALE = $SCALE$	CHECKED -	REVISED -
PLOT DATE = $DATE$	DATE -	REVISED -

STATE OF ILLINOIS
DEPARTMENT OF TRANSPORTATION

CORRIDOR 5 (IL 97)
LOCATION 1 & 2

SCALE: | SHEET OF SHEETS | STA. TO STA.

F.A. RTE.	SECTION	COUNTY	TOTAL SHEETS	SHEET NO.
VAR	D4 GUARDRAIL END SECT REPL 2020	VARIOUS	50	39

CONTRACT NO. 68F57

ILLINOIS | FED. AID PROJECT

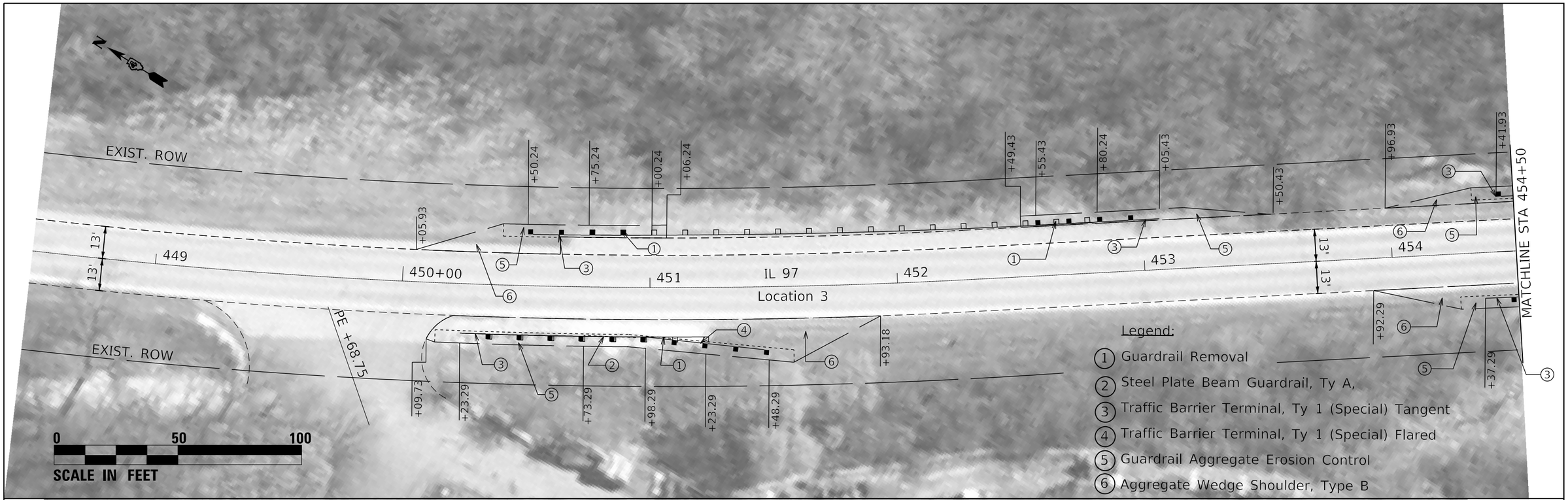

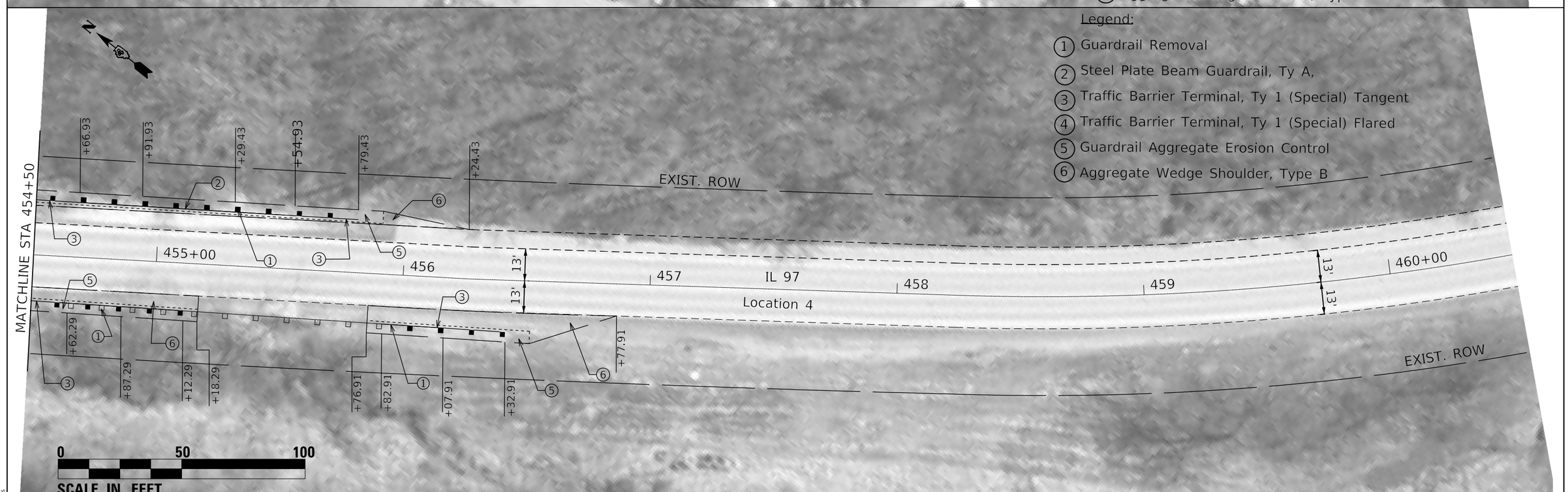

MODEL: $MODELNAME$
FILE NAME: $FILE$

USER NAME = $USER$	DESIGNED -	REVISED -
	DRAWN -	REVISED -
PLOT SCALE = $SCALE$	CHECKED -	REVISED -
PLOT DATE = $DATE$	DATE -	REVISED -

STATE OF ILLINOIS
DEPARTMENT OF TRANSPORTATION

CORRIDOR 5 (IL 97)
LOCATIONS 3 & 4

SCALE: | SHEET OF SHEETS | STA. TO STA.

F.A. RTE.	SECTION	COUNTY	TOTAL SHEETS	SHEET NO.
VAR	D4 GUARDRAIL END SECT REPL 2020	VARIOUS	50	40

CONTRACT NO. 68F57

ILLINOIS | FED. AID PROJECT

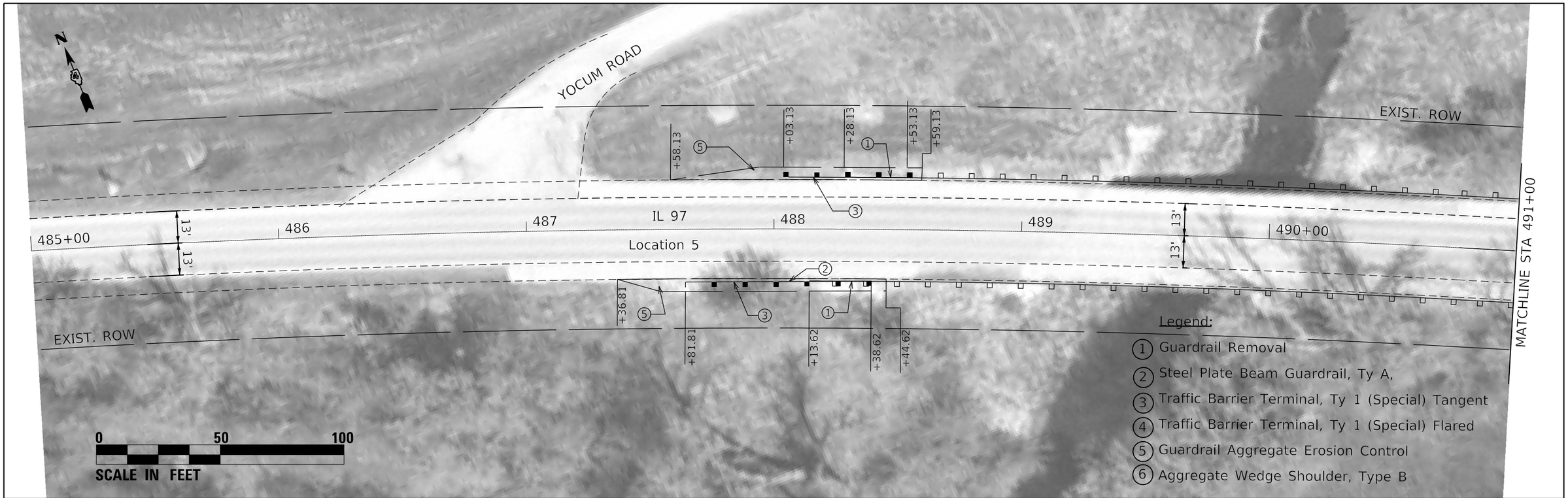

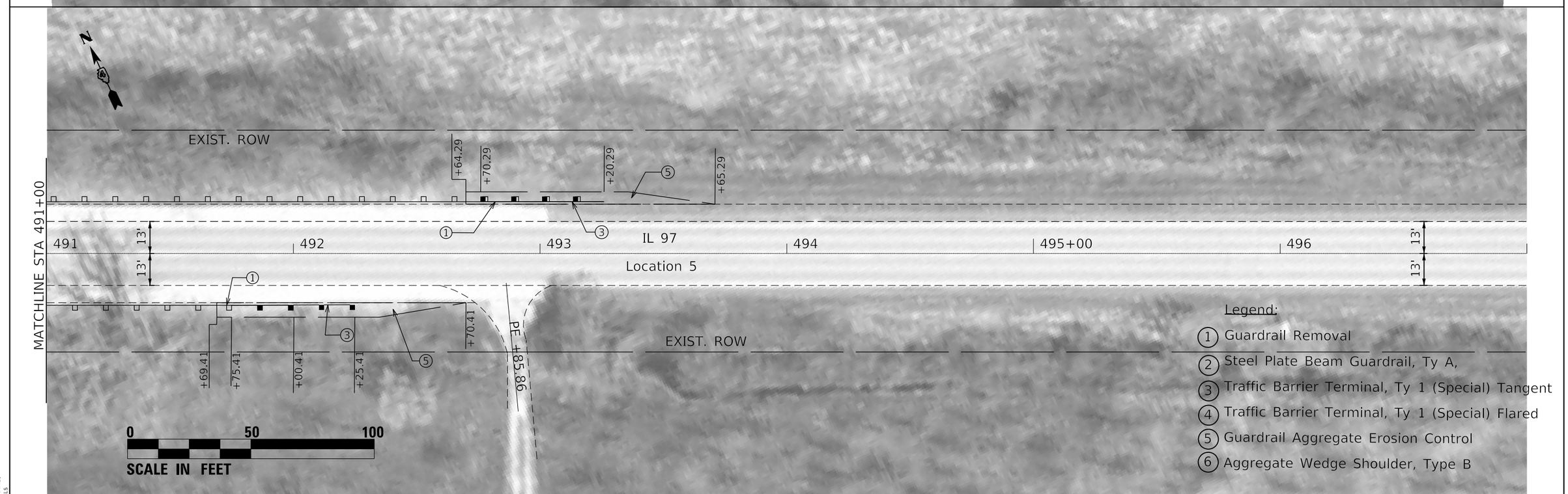

MODEL: $MODELNAME$
FILE NAME: $FILEL$

USER NAME = $USER$	DESIGNED -	REVISED -
	DRAWN -	REVISED -
PLOT SCALE = $SCALE$	CHECKED -	REVISED -
PLOT DATE = $DATE$	DATE -	REVISED -

STATE OF ILLINOIS
DEPARTMENT OF TRANSPORTATION

CORRIDOR 5 (IL 97)
LOCATION 5

SCALE: SHEET OF SHEETS STA. TO STA.

F.A. RTE.	SECTION	COUNTY	TOTAL SHEETS	SHEET NO.
VAR	D4 GUARDRAIL END SECT REPL 2020	VARIOUS	50	41
		CONTRACT NO. 68F57		
	ILLINOIS	FED. AID PROJECT		

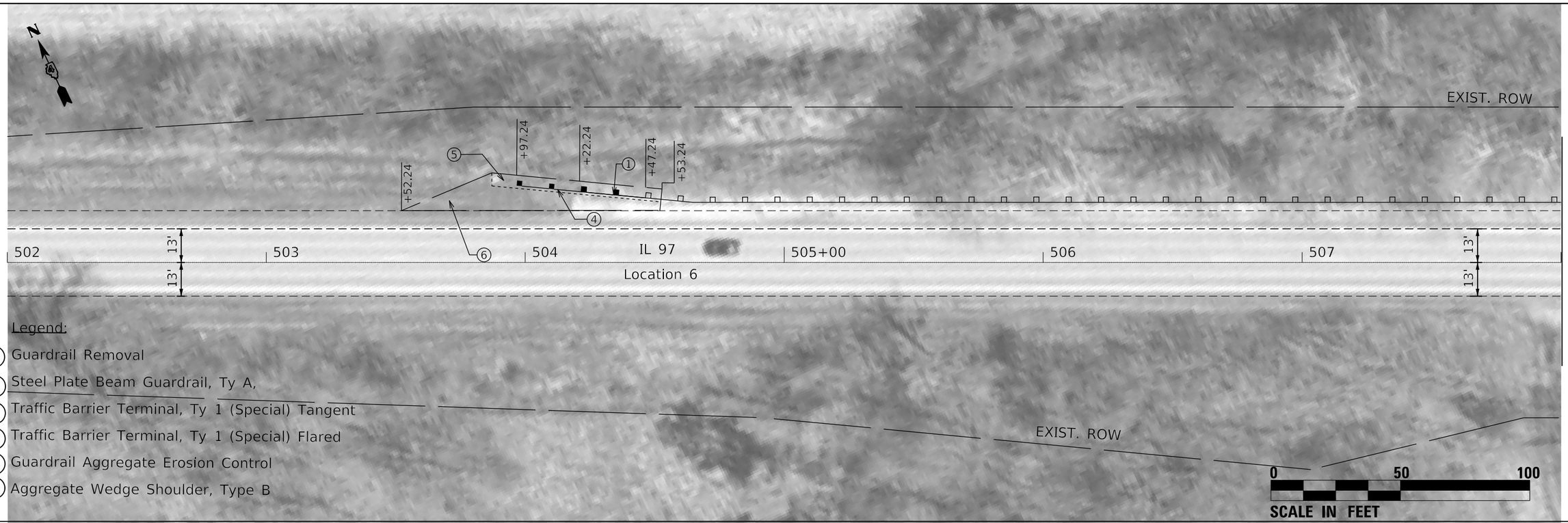

Legend:

1. Guardrail Removal
2. Steel Plate Beam Guardrail, Ty A,
3. Traffic Barrier Terminal, Ty 1 (Special) Tangent
4. Traffic Barrier Terminal, Ty 1 (Special) Flared
5. Guardrail Aggregate Erosion Control
6. Aggregate Wedge Shoulder, Type B

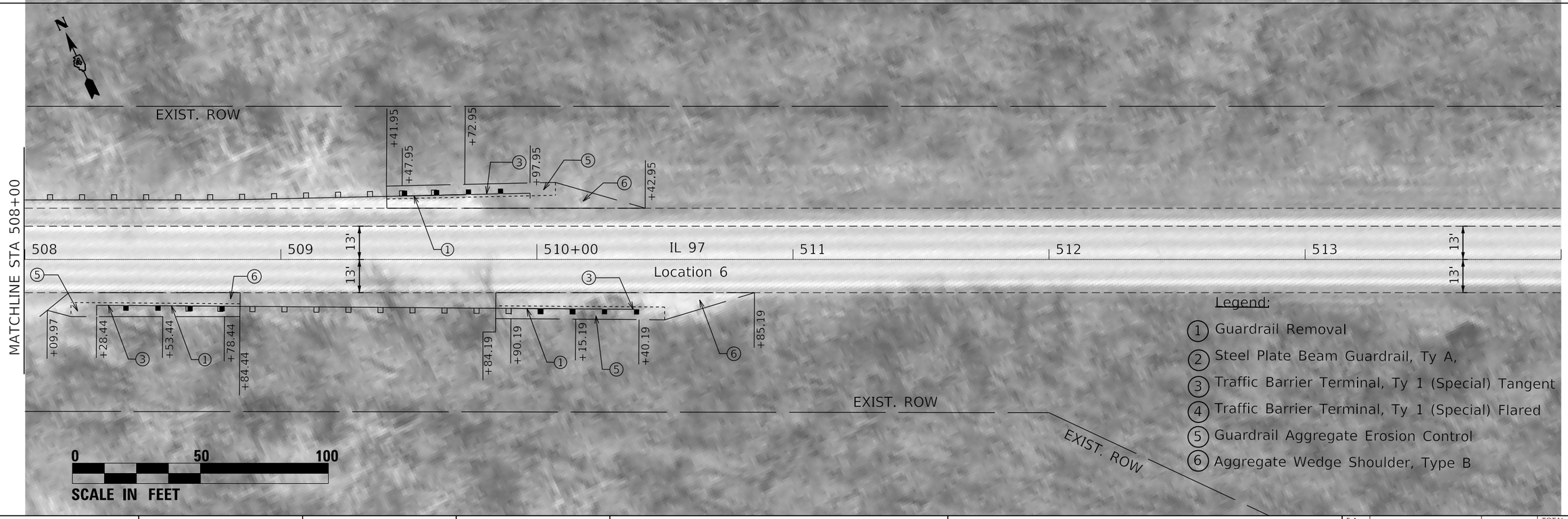

Legend:

1. Guardrail Removal
2. Steel Plate Beam Guardrail, Ty A,
3. Traffic Barrier Terminal, Ty 1 (Special) Tangent
4. Traffic Barrier Terminal, Ty 1 (Special) Flared
5. Guardrail Aggregate Erosion Control
6. Aggregate Wedge Shoulder, Type B

MODEL: $MODELNAME$
FILE NAME: $FILE$

USER NAME = $USER$	DESIGNED -	REVISED -
	DRAWN -	REVISED -
PLOT SCALE = $SCALE$	CHECKED -	REVISED -
PLOT DATE = $DATE$	DATE -	REVISED -

STATE OF ILLINOIS
DEPARTMENT OF TRANSPORTATION

CORRIDOR 5 (IL 97)
LOCATION 6

SCALE: | SHEET OF SHEETS | STA. TO STA.

F.A. RTE.	SECTION	COUNTY	TOTAL SHEETS	SHEET NO.
VAR	D4 GUARDRAIL END SECT REPL 2020	VARIOUS	50	42

CONTRACT NO. 68F57

ILLINOIS | FED. AID PROJECT

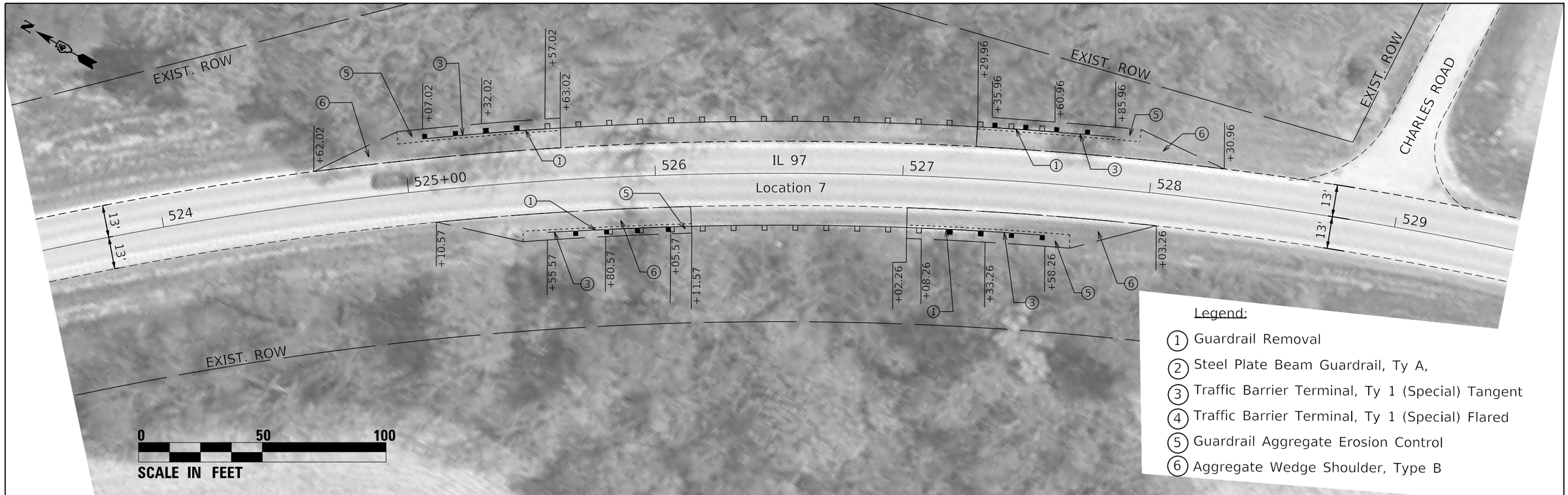

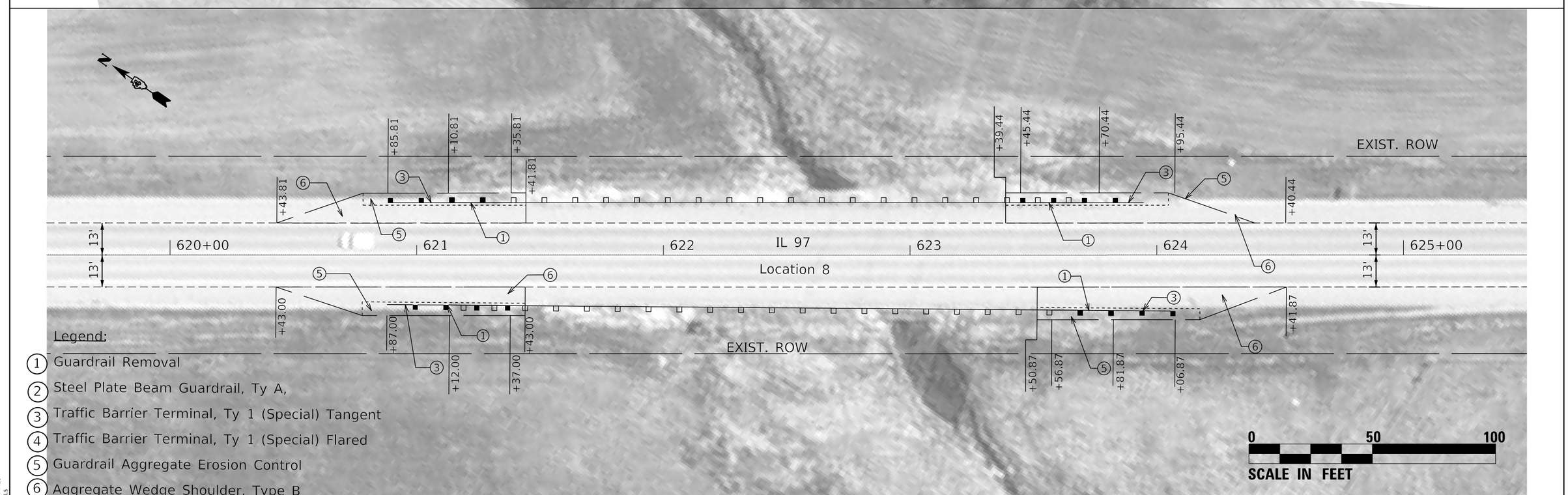

MODEL: $MODELNAME$
FILE NAME: $FILE$

USER NAME = $USER$	DESIGNED -	REVISED -
	DRAWN -	REVISED -
PLOT SCALE = $SCALE$	CHECKED -	REVISED -
PLOT DATE = $DATE$	DATE -	REVISED -

STATE OF ILLINOIS
DEPARTMENT OF TRANSPORTATION

CORRIDOR 5 (IL 97)
LOCATIONS 7 & 8

SCALE: | SHEET OF SHEETS | STA. TO STA.

F.A. RTE.	SECTION	COUNTY	TOTAL SHEETS	SHEET NO.
VAR	D4 GUARDRAIL END SECT REPL 2020	VARIOUS	50	43

CONTRACT NO. 68F57

ILLINOIS | FED. AID PROJECT

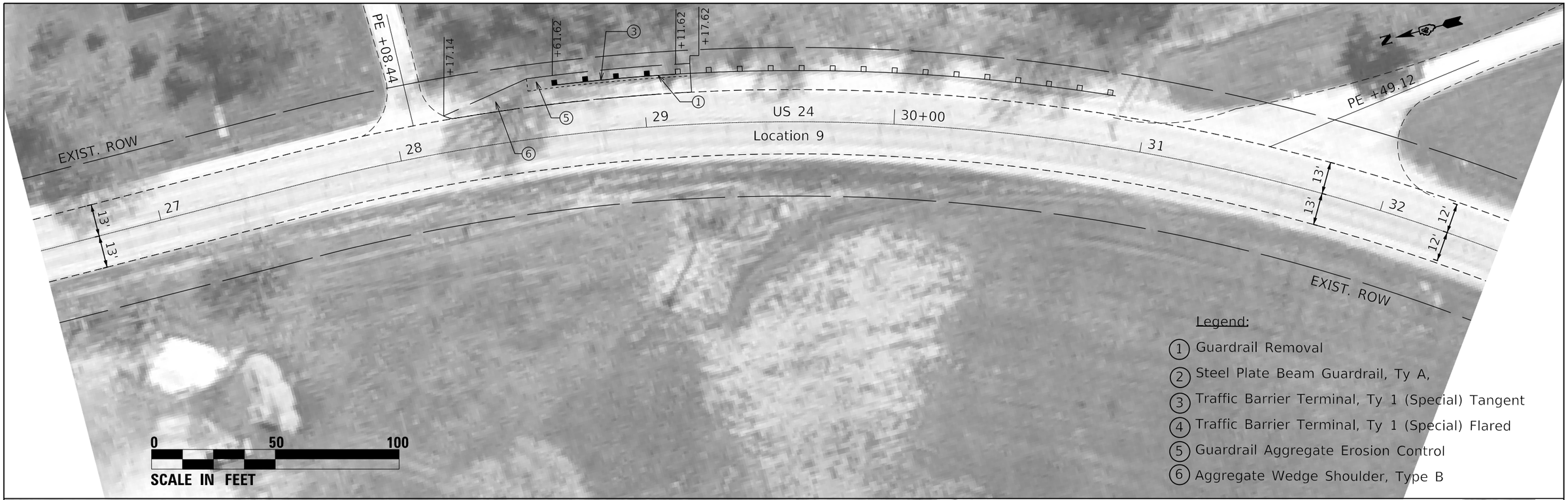

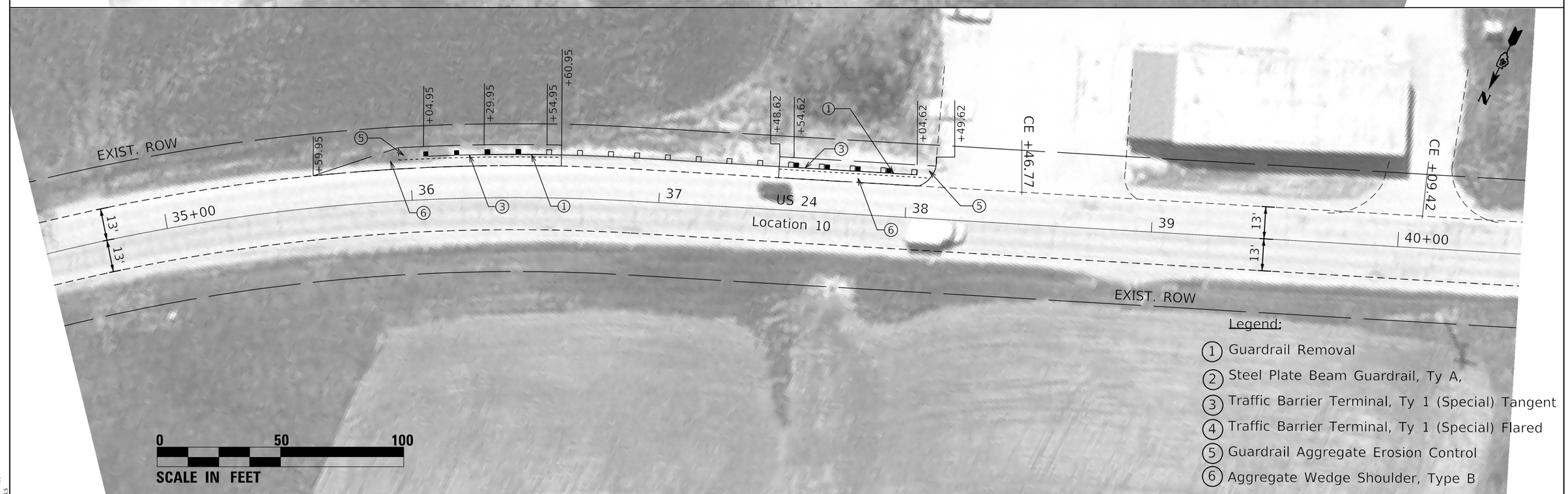

MODEL: $MODELNAME$
FILE NAME: $FILE$

USER NAME = $USER$	DESIGNED -	REVISED -
	DRAWN -	REVISED -
PLOT SCALE = $SCALE$	CHECKED -	REVISED -
PLOT DATE = $DATE$	DATE -	REVISED -

STATE OF ILLINOIS
DEPARTMENT OF TRANSPORTATION

CORRIDOR 5 (IL 97)
LOCATIONS 9 & 10

SCALE: | SHEET OF SHEETS | STA. TO STA.

F.A. RTE.	SECTION	COUNTY	TOTAL SHEETS	SHEET NO.
VAR	D4 GUARDRAIL END SECT REPL 2020	VARIOUS	50	44

CONTRACT NO. 68F57

ILLINOIS | FED. AID PROJECT

DESIGNER NOTE: Use this CADD Standard when removing and re-erecting existing non-MGS guardrail that was originally installed prior to January 1, 2007 or to replace existing rail to match existing non-MGS rail. Note this is removing and re-erecting so the 27½" height is maintained. If installing the new style MGS guardrail use the State Standard.

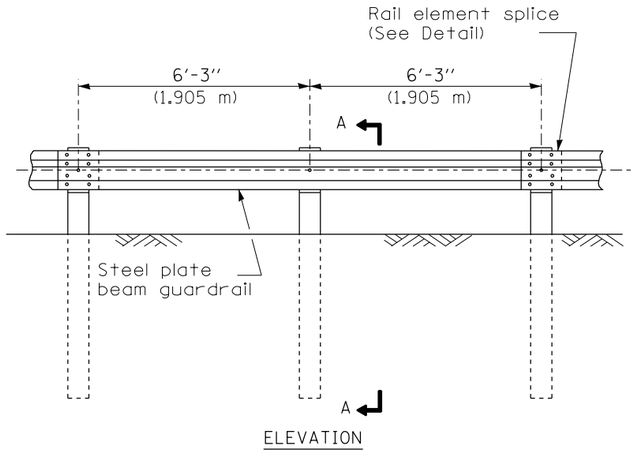

TYPE A

6'-3" (1.905 m) Typical post spacing

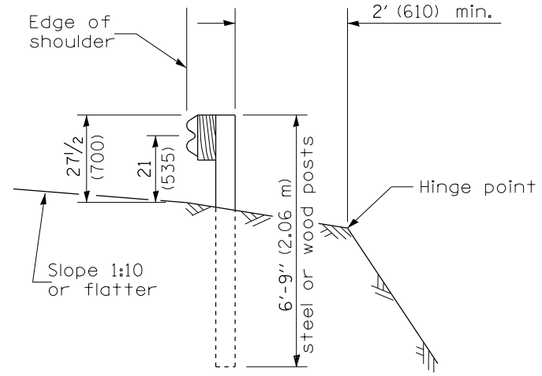

SECTION A-A

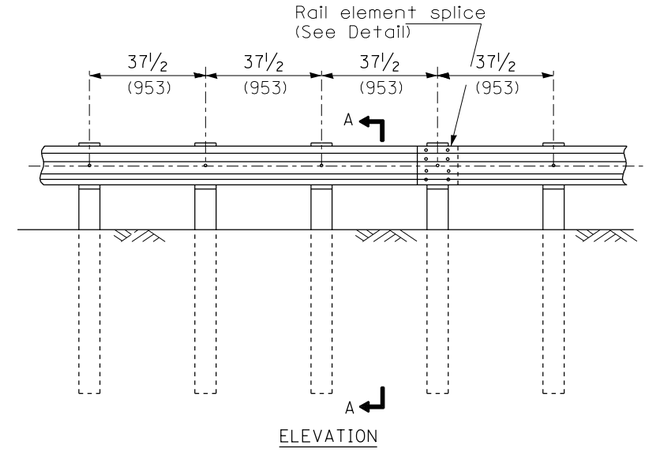

TYPE B

37½ (953) Closed post spacing

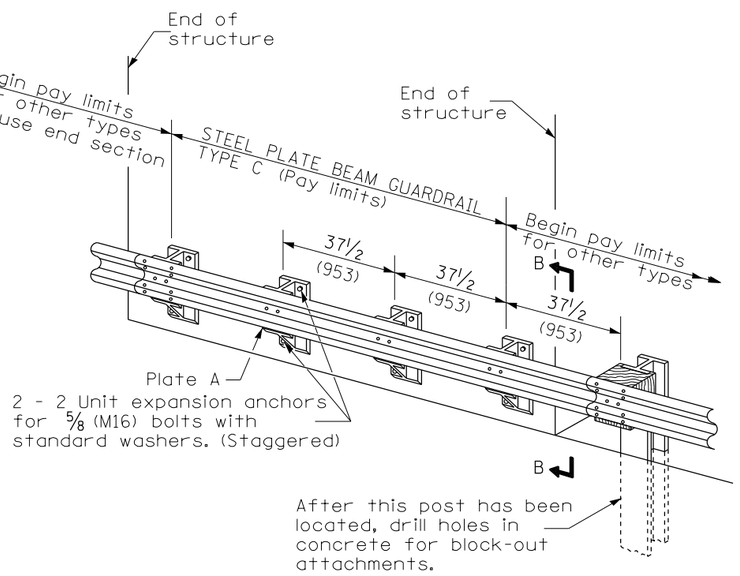

TYPE C

37½ (953) Block-out spacing

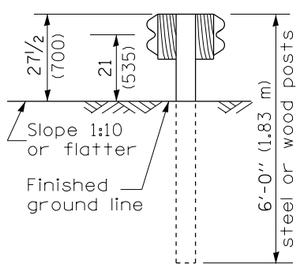

SECTION C-C

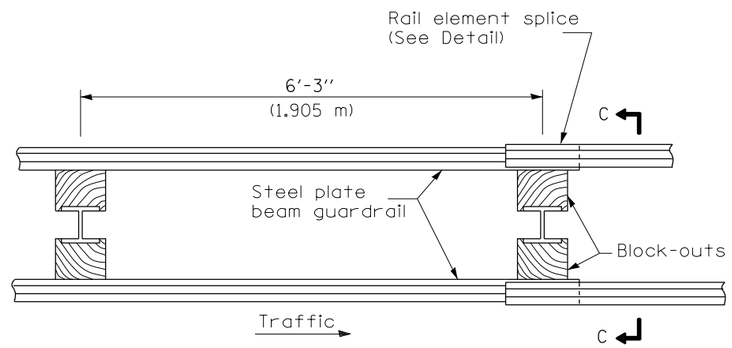

PLAN

TYPE D

Double steel plate beam guardrail
6'-3" (1.905 m) typical post spacing

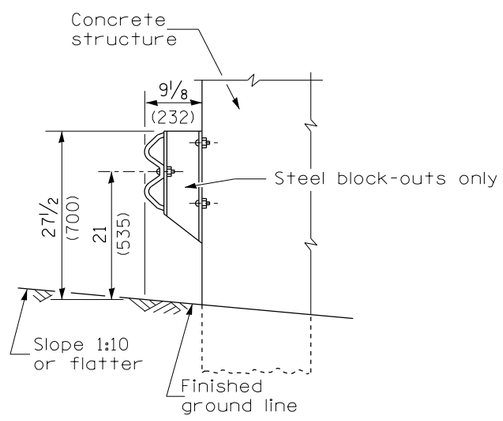

SECTION B-B

GENERAL NOTES

All slope ratios are expressed as units of vertical displacement to units of horizontal displacement (V:H).

All dimensions are in millimeters (inches) unless otherwise shown.

The existing steel posts may be drilled to match the bolt pattern shown herein for the wood block-out, or a new steel post shall be provided.

This detail is applicable to the guardrail system used prior to January 1, 2007. For details on the Midwest Guardrail System, see Standard 630001.

All dimensions are in inches (millimeters) unless otherwise noted.

03-01-07	NEW DETAIL	RJD
03-07-11	Revised designer note	RJD

STATE OF ILLINOIS
DEPARTMENT OF TRANSPORTATION

STEEL PLATE BEAM GUARDRAIL, TYPE A,
6.75 FOOT POSTS

NOT TO SCALE

SHT. 1 OF 4
CADD STD. 630011-D4

F.A. RTE.	SECTION	COUNTY	TOTAL SHEETS	SHEET NO.
VAR	04 GUARDRAIL END SECT REPL 2020	VARIOUS	50	45
		CONTRACT NO. 68F57		
FED. ROAD DIST. NO.	ILLINOIS	FED. AID PROJECT		

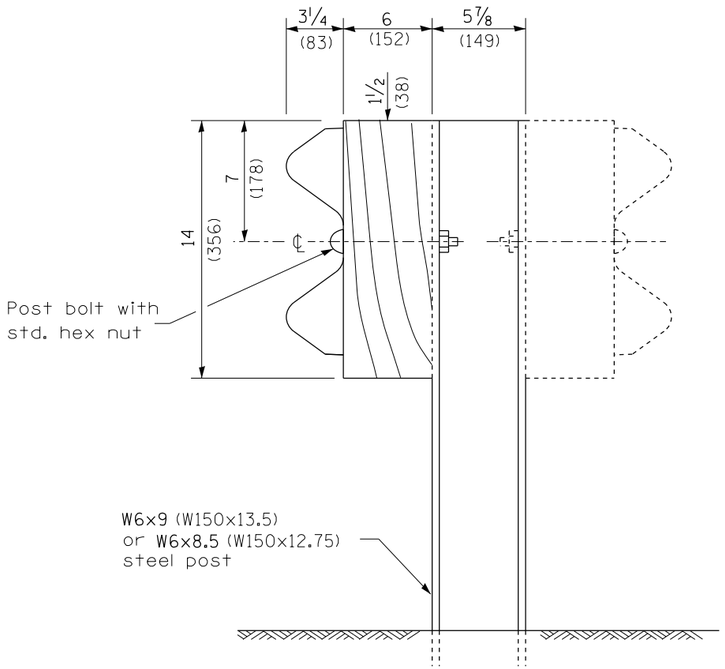

STEEL POST CONSTRUCTION

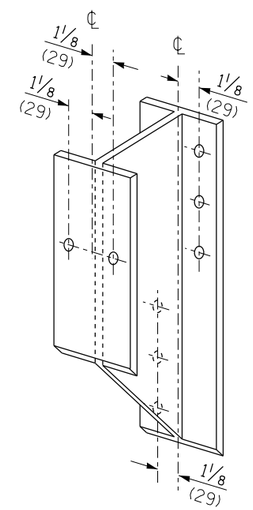

STEEL BLOCK-OUT DETAIL

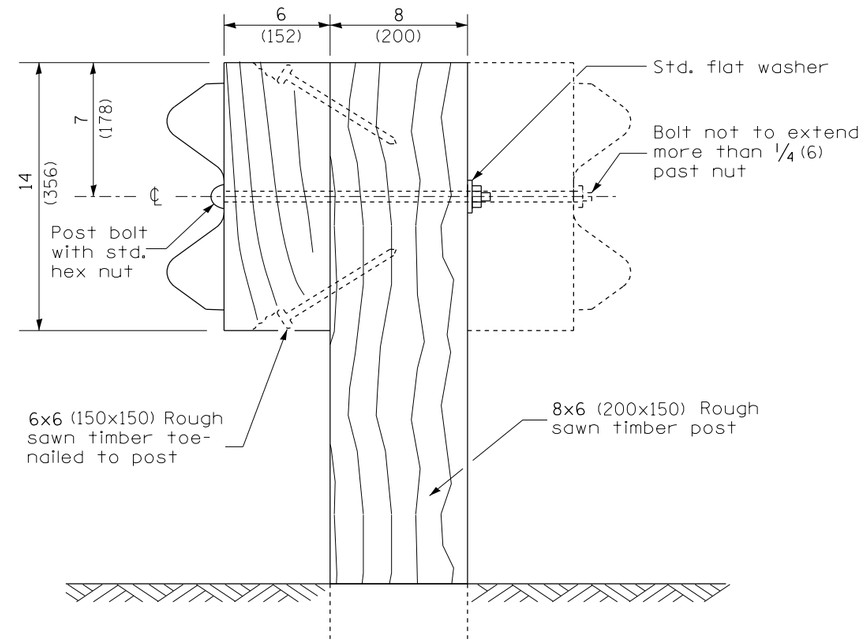

WOOD POST CONSTRUCTION

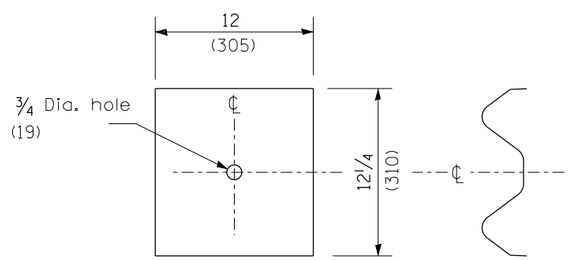

NOTE

Plate A shall be placed between rail element and block-out at non-splice mounting points only when steel block-outs are used.

PLATE A

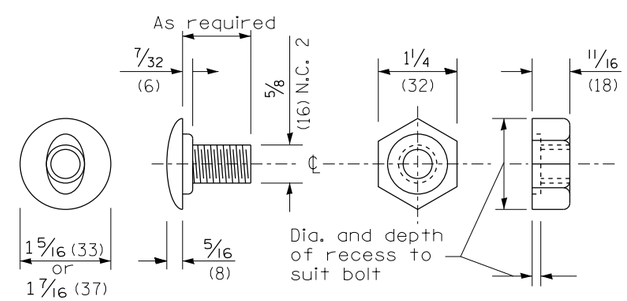

POST OR SPLICE BOLT & NUT

All dimensions are in inches (millimeters) unless otherwise noted.

STATE OF ILLINOIS
DEPARTMENT OF TRANSPORTATION

NOT TO SCALE

STEEL PLATE BEAM GUARDRAIL, TYPE A,
6.75 FOOT POSTS

SHT. 2 OF 4
CADD STD. 630011-D4

F.A. RTE.	SECTION	COUNTY	TOTAL SHEETS	SHEET NO.
VAR	04 GUARDRAIL END SECT REPL 2020	VARIOUS	50	46
		CONTRACT NO. 68F57		
FED. ROAD DIST. NO.	ILLINOIS	FED. AID PROJECT		

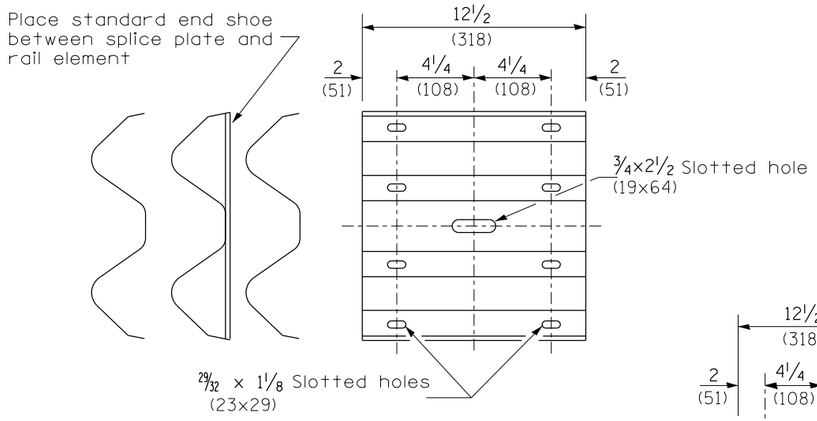

SPLICE PLATE

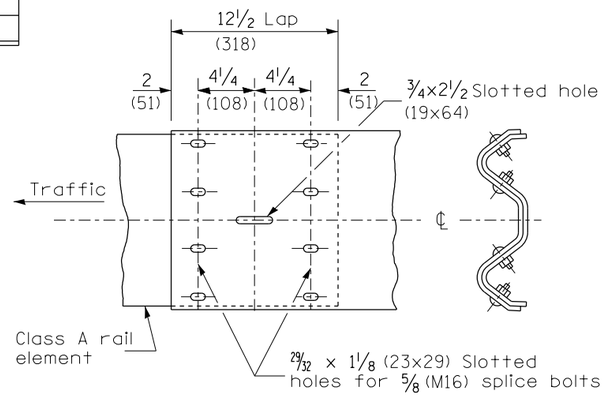

RAIL ELEMENT SPLICE

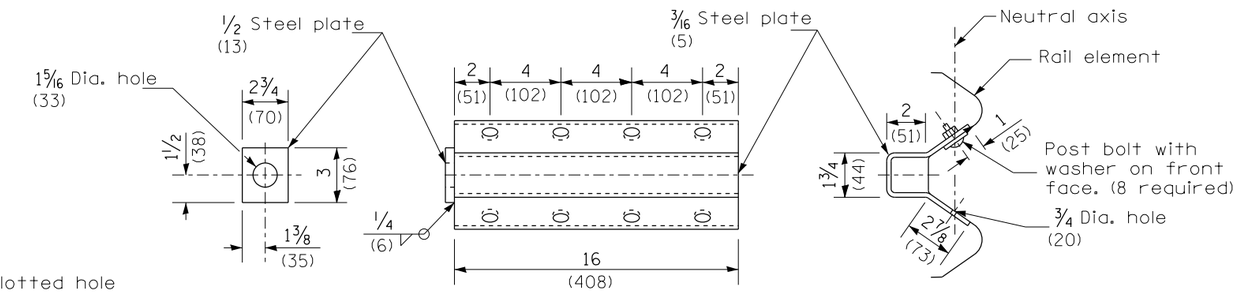

NOTE

Anchor plate T shall be used to attach cable assembly to guardrail when required on traffic barrier terminals.

ANCHOR PLATE T DETAILS

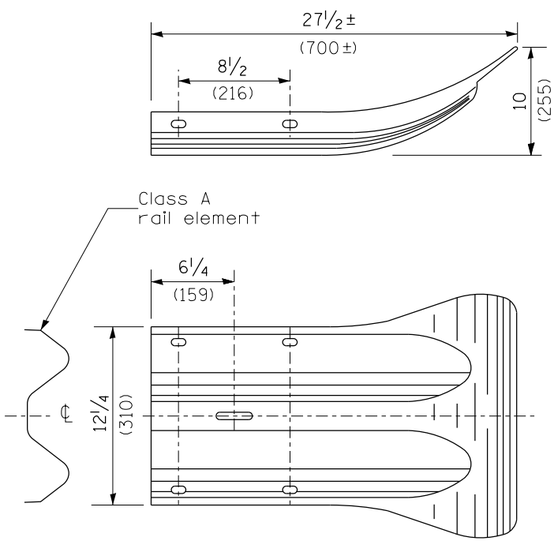

END SECTION

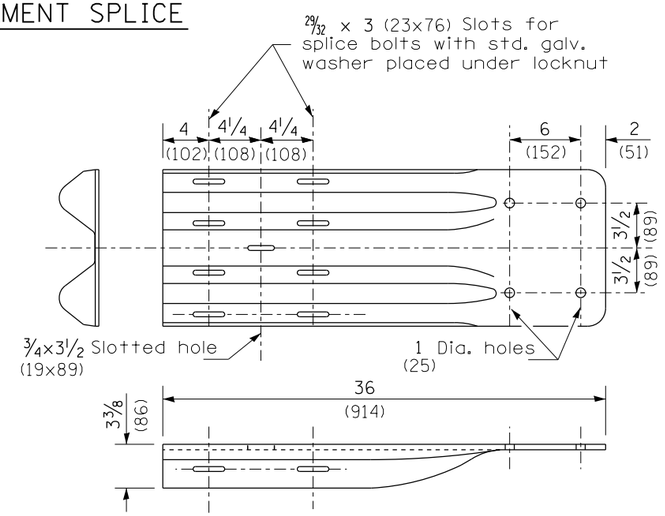

NOTE

When end shoe is attached to a bridge parapet which has an expansion joint, the bolts shall be provided with a locknut or double nut and shall be tightened only to a point that will allow guardrail movement.

The standard end shoe shall be attached to the concrete with pre-drilled or self-drilling anchor bolts. The anchor cone shall be set flush with the surface of the concrete.

Externally threaded studs protruding from the surface of the concrete will not be permitted.

END SHOE

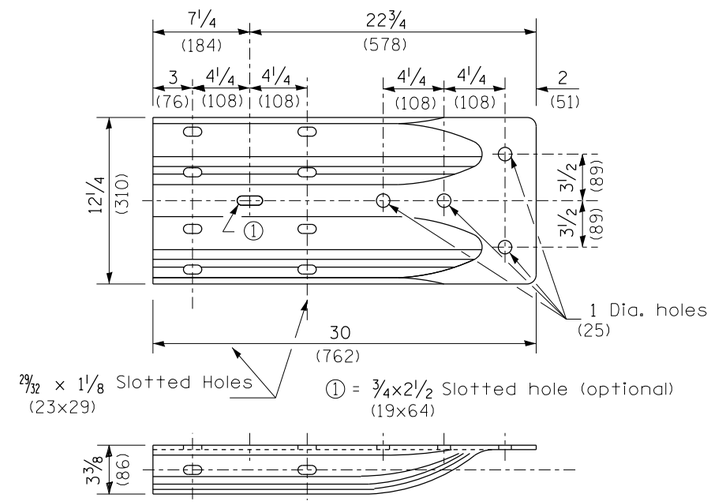

ALTERNATE END SHOE

All dimensions are in inches (millimeters) unless otherwise noted.

STATE OF ILLINOIS
DEPARTMENT OF TRANSPORTATION

NOT TO SCALE

STEEL PLATE BEAM GUARDRAIL, TYPE A, 6.75 FOOT POSTS

SHT. 3 OF 4
CADD STD. 630011-D4

F.A. RTE.	SECTION	COUNTY	TOTAL SHEETS	SHEET NO.
VAR	04 GUARDRAIL END SECT REPL 2020	VARIOUS	50	47
		CONTRACT NO. 68F57		
FED. ROAD DIST. NO.	ILLINOIS	FED. AID PROJECT		

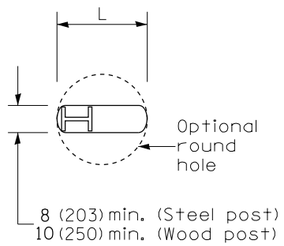

PLAN

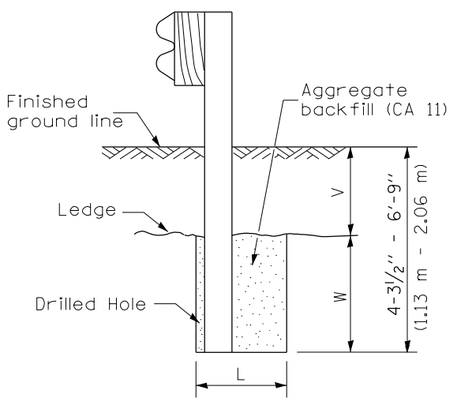

Note:
Ledge line is top of rock ledge or hard slag fill.

ELEVATION

FOOTING FOR POST WHEN IMPERVIOUS MATERIAL IS ENCOUNTERED

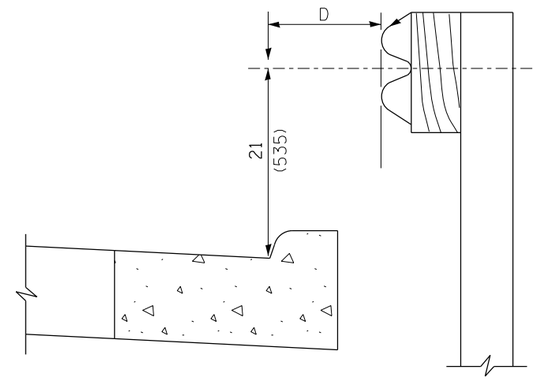

Note:
If it is necessary for D to be more than 12 (300) and less than 10'-0" (3.0 m) type M-2 (M-5) curb and gutter (Std. 606001) shall be used in front of and in advance of the guardrail.

GUARDRAIL PLACED BEHIND CURB

(D = 0 desirable to 12 (300) maximum)

V	W	L	
		Steel Post	Wood Post
0 - 18 (0 - 460)	24 (610)	21 (530)	23 (580)
>18 - 41.5 (>460 - 825)	12 (305)	8 (203)	10 (250)
>41.5 - 53.5 (>825 - 1.13 m)	12 - 0 (305 - 0)	8 (203)	10 (250)

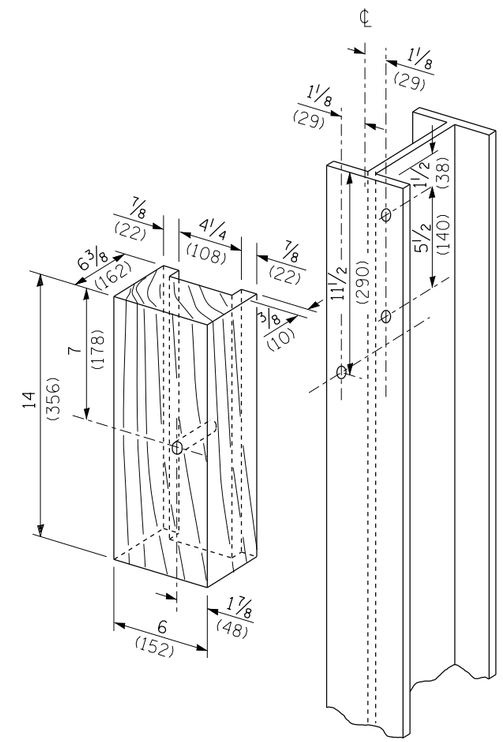

WOOD BLOCK-OUT AND STEEL POST DETAILS

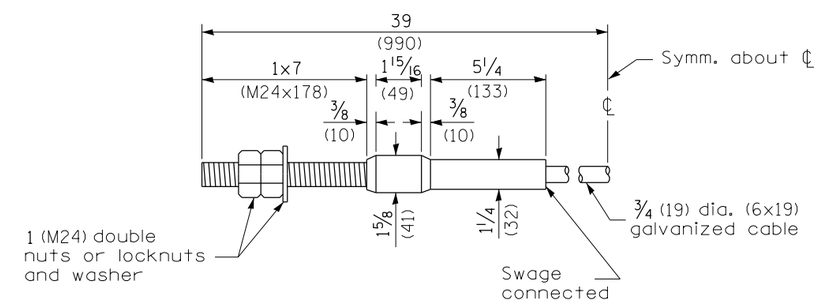

CABLE ASSEMBLY

(18,100 kg (40,000 lbs.) min. breaking strength)
Tighten to taut tension.

All dimensions are in inches (millimeters) unless otherwise noted.

STATE OF ILLINOIS
DEPARTMENT OF TRANSPORTATION

STEEL PLATE BEAM GUARDRAIL, TYPE A, 6.75 FOOT POSTS

NOT TO SCALE

SHT. 4 OF 4
CADD STD. 630011-D4

F.A. RTE.	SECTION	COUNTY	TOTAL SHEETS	SHEET NO.
VAR	04 GUARDRAIL END SECT REPL 2020	VARIOUS	50	48
		CONTRACT NO. 68F57		
FED. ROAD DIST. NO.	ILLINOIS	FED. AID PROJECT		

DESIGNER NOTES:

1. CONSIDER USING A "B" CURB PAY ITEM AT GUARDRAIL INSTALLATIONS WHERE GRADES ARE EQUAL TO OR GREATER THAN 1% AND AT INLETS. (INCLUDE DISTRICT SPECIAL PROVISION)
2. USE "GUARDRAIL AGGREGATE EROSION CONTROL" AT GUARDRAIL INSTALLATIONS WHERE GRADES ARE LESS THAN 1% (INCLUDE DISTRICT SPECIAL PROVISION).
3. INCLUDE STATE STANDARD 610001, IF APPLICABLE.
4. INCLUDE THE FOLLOWING DISTRICT CADD STANDARDS AS NEEDED: SLOPE DRAINS FOR EXPOSED PIPES; SLOPE DRAINS FOR BURIED PIPES; SEEPAGE COLLARS FOR BURIED PIPES SEEPAGE COLLARS FOR EXPOSED PIPES; CONCRETE THRUST BLOCKS AND PIPE ELBOW.
5. INCLUDE DISTRICT SPECIAL PROVISION - "AGGREGATE QUALITY" FOR PROJECTS LOCATED IN THE WESTERN AREA OF THE DISTRICT - APPROX. DIVIDING LINE IS IL 97.
6. DELETE DESIGNER NOTES WHEN INSERTING INTO PLAN FILES.
7. OPERATIONS PREFERS USE OF PIPE OUTLETTING ONTO FORESLOPE WITH RIPRAP. USE NON-METALLIC PIPE WHEN POSSIBLE BECAUSE OF FUTURE CORROSION ISSUES.
8. IF NO OTHER SEEDING IS PAID FOR ON THE CONTRACT, USE DISTRICT SPECIAL PROVISION FOR SEEDING, MINOR AREAS

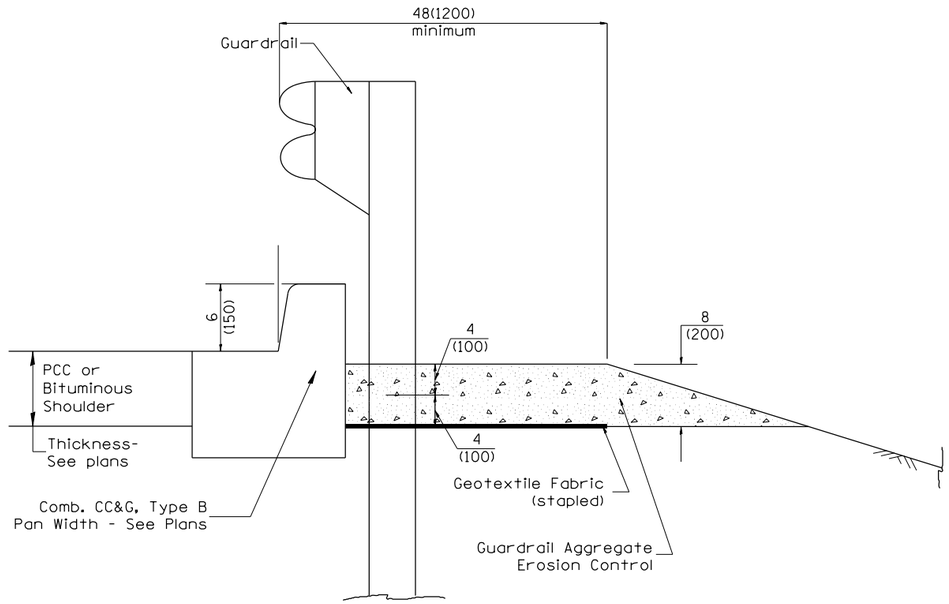

TYPICAL SECTION WITH COMBINATION CONCRETE CURB & GUTTER

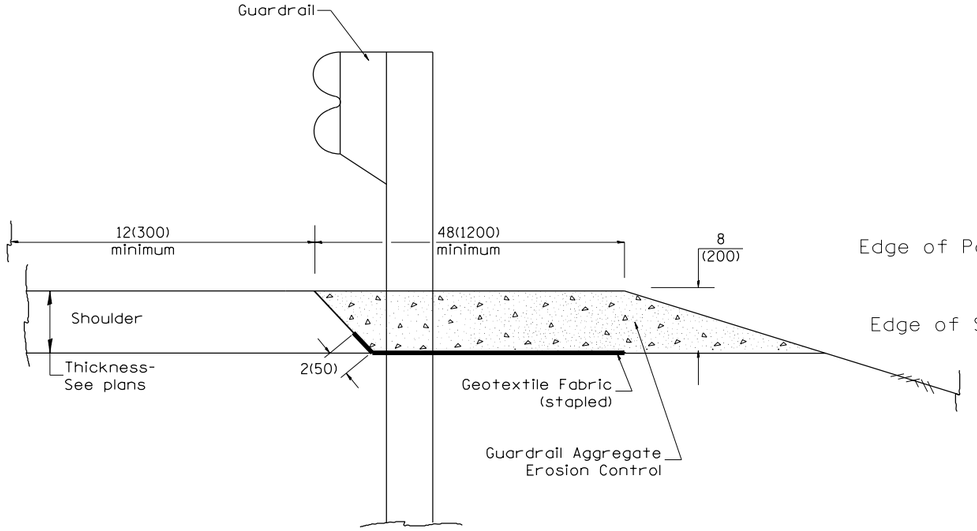

TYPICAL SECTION WITHOUT EROSION CONTROL CURB

GENERAL NOTES: GUARDRAIL AGGREGATE EROSION CONTROL

1. This work shall consist of grading as needed, furnishing and installing geotextile fabric and staples, and furnishing, placing and shaping crushed aggregate around and behind Steel Plate Beam Guardrail posts in accordance with Plan Details.

2. Before placing the aggregate and the Geotextile Fabric, weeds and grass shall be removed from the area to be covered.

3. After the area has been prepared, and in a dry condition, the Geotextile fabric shall be placed with a 12(300) minimum overlap. A knife cut for guardrail post installation is necessary.

4. The aggregate shall be deposited, compacted and shaped by either mechanical or hand methods, in a manner reasonably true to line and grade.

5. The Contractor shall have the option of placing the guardrail before or after the Geotextile Fabric and Aggregate are in place. If the guardrail is placed after the Geotextile Fabric and Aggregate, then any voids must be filled and the aggregate returned to line and grade.

6. Materials shall meet the following requirements:

A. The crushed aggregate shall be CA1 gradation in accordance with Article 1004.01(c) of the Standard Specifications.

B. The Geotextile Fabric shall be nonwoven fabric in accordance with Article 1080.02 of the Standard Specifications.

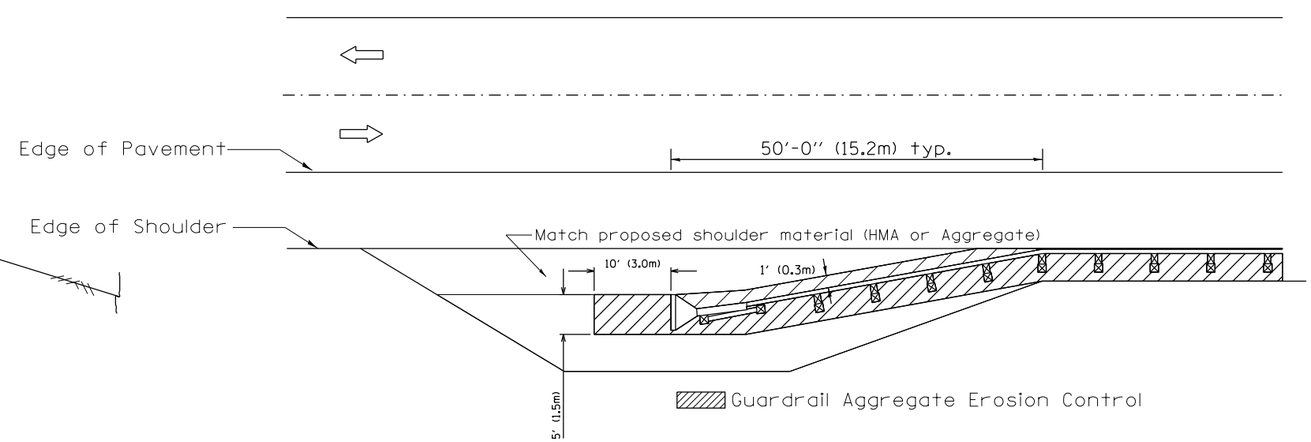

All dimensions are in inches (millimeters) unless otherwise noted.

03-07-11	ADDED DETAIL SHOWING PLAN VIEW	R.D.	5-30-18	CHANGE B CURB TO CC&G	R.D.
08-10-12	REVISED CURB "B" AND AGGREGATE	R.D.	07-16-19	SPELLING CORRECTIONS	R.D.
07-15-15	ADDRESSED SHOULDER INLET CURB	R.D.			
01-26-17	REVISED	R.D.			

STATE OF ILLINOIS
DEPARTMENT OF TRANSPORTATION

GUARDRAIL EROSION CONTROL TREATMENTS

NOT TO SCALE

SHT. 1 OF 2
CADD STD. 630101-D4

F.A. RTE.	SECTION	COUNTY	TOTAL SHEETS	SHEET NO.
VAR 04	GUARDRAIL END SECT REPL 2020	VARIOUS	50	49
		CONTRACT NO. 68F57		
FED. ROAD DIST. NO.	ILLINOIS	FED. AID PROJECT		

DETAIL "A"

#4 reinforcement bars may be cast in PCC apron and precast inlet box or drilled and anchored with an approved chemical adhesive at 2' spacing. Cost of curb and reinforcement are included in the cost of shoulder inlet.

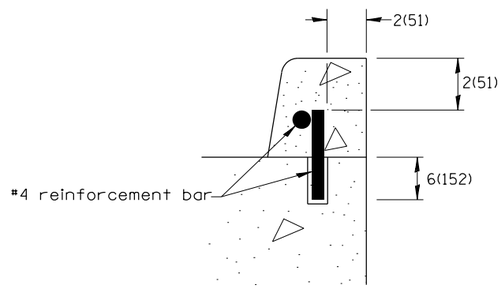

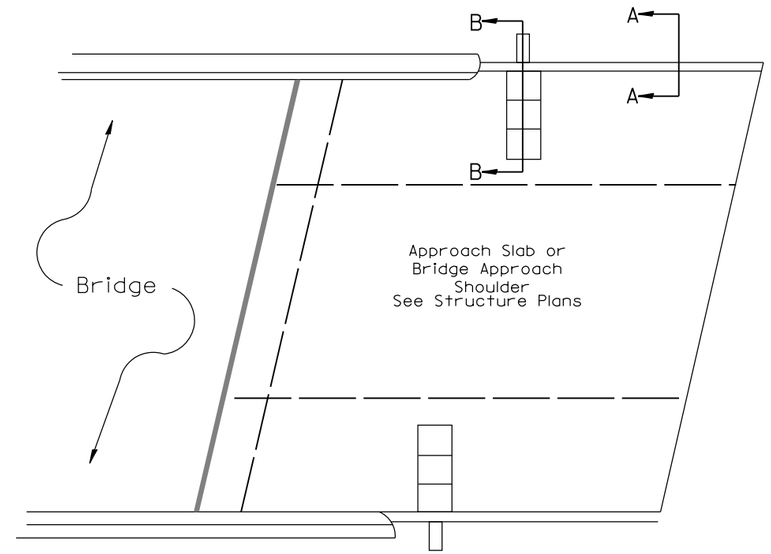

PLAN VIEW

APPROACH SLAB OR SHOULDER PLACEMENT

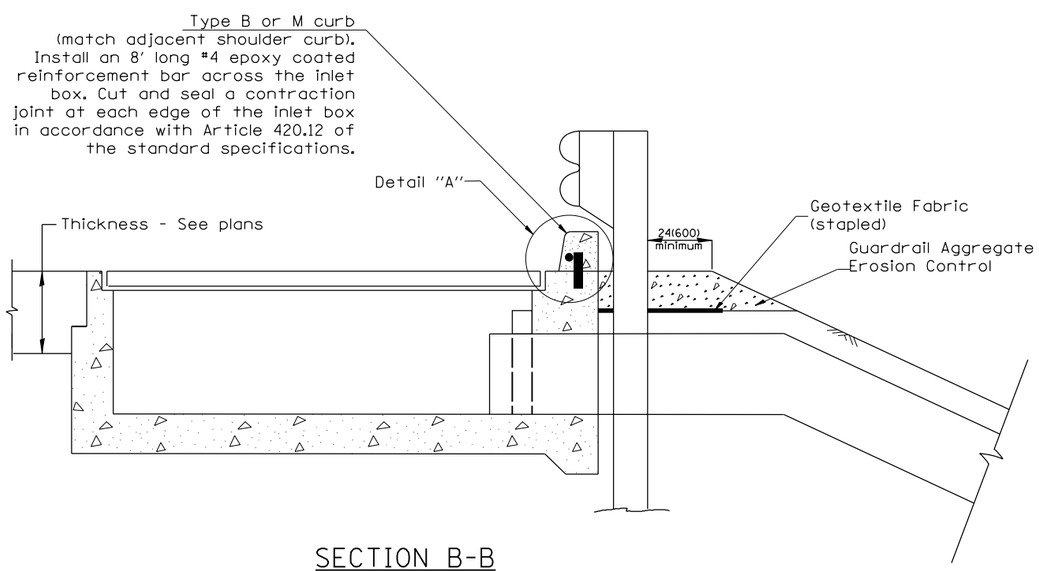

SECTION B-B

TYPICAL SECTION AT INLETS

TYPE E, F & G (HIGHWAY STANDARD 610001)

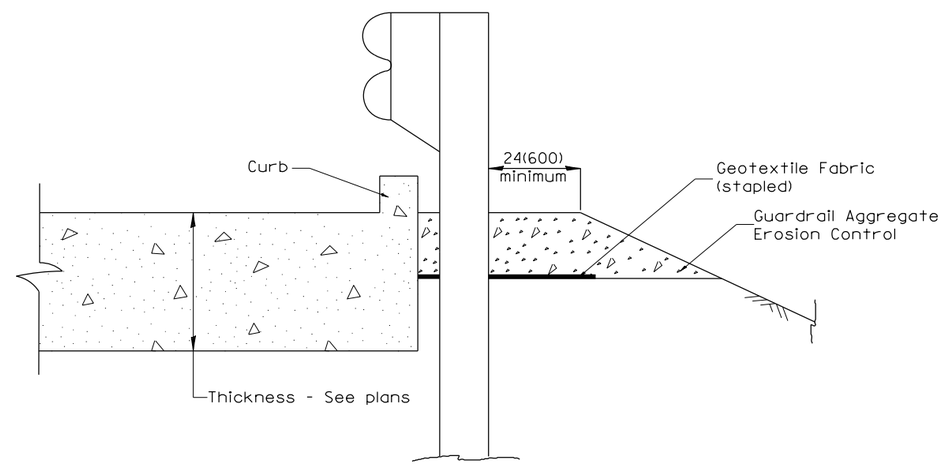

SECTION A-A

TYPICAL SECTION WITH BRIDGE APPROACH CURB

All dimensions are in inches (millimeters) unless otherwise noted.

STATE OF ILLINOIS
DEPARTMENT OF TRANSPORTATION

GUARDRAIL EROSION CONTROL TREATMENTS

NOT TO SCALE

SHT. 2 OF 2
CADD STD. 630101-D4

F.A. RTE.	SECTION	COUNTY	TOTAL SHEETS	SHEET NO.
VAR	04 GUARDRAIL END SECT REPL 2020	VARIOUS	50	50
		CONTRACT NO. 68F57		
FED. ROAD DIST. NO.	ILLINOIS	FED. AID PROJECT		