CONTRACT NO.

F.A. RTE.	SECTION	COUNTY	TOTAL SHEETS	SHEET NO.
	06-00233-00-BT	ROCK ISLAND	75	27
STA.		TO STA.		
FED. ROAD DIST. NO.	ILLINOIS	FED. AID PROJECT		

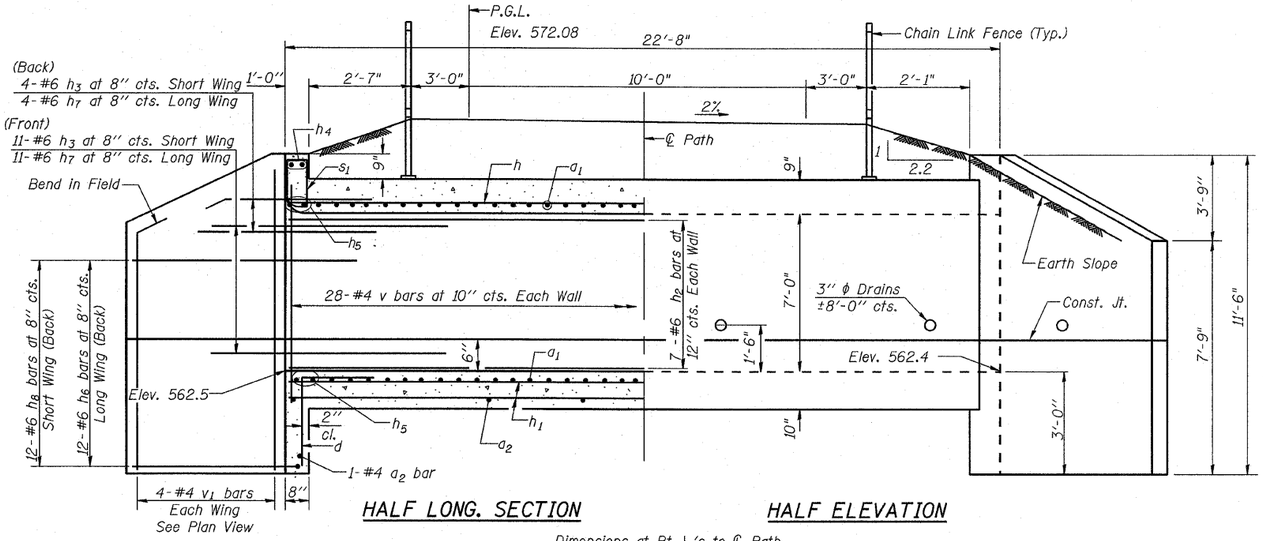

HALF LONG. SECTION

HALF ELEVATION

Dimensions at Rt. L's to ℄ Path

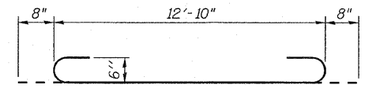

BAR a1

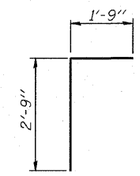

BAR d

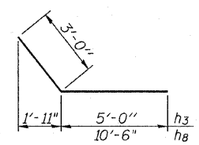

BARS h3 & h8
(Short Wing)

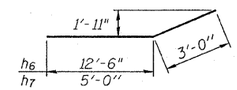

BARS h6 & h7
(Long Wing)

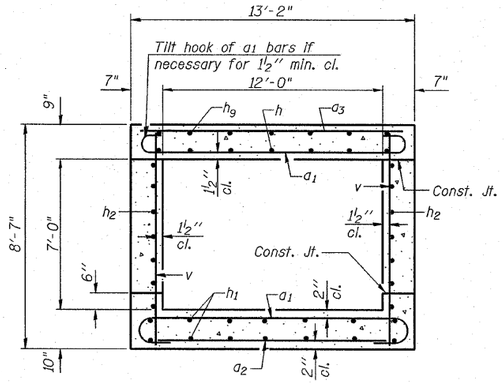

SECTION THRU BARREL

BILL OF MATERIAL

Bar	No.	Size	Length	Shape
a1	62	#6	14'-2"	
a2	14	#4	12'-3"	
a3	16	#5	12'-10"	
d	26	#4	4'-6"	
h	13	#6	22'-9"	
h1	24	#5	22'-9"	
h2	14	#6	22'-9"	
h3	30	#6	8'-0"	
h4	4	#6	13'-5"	
h5	8	#6	13'-5"	
h6	24	#6	15'-6"	
h7	30	#6	8'-0"	
h8	24	#6	13'-6"	
h9	13	#4	22'-9"	
s	13	#4	4'-9"	
s1	13	#4	4'-6"	
v	60	#4	8'-3"	
v1	16	#4	11'-2"	
Concrete Box Culverts			Cu. Yd.	48.6
Reinforcement Bars			Pound	5,960

*3 -#6 a1 bars at 9" cts. Bott. of Top Slab
*3 -#6 a1 bars at 9" cts. Top of Bott. Slab
*1 -#4 a2 bar at ±2'-0" cts. Bott. of Bott. Slab
*1 -#5 a3 bar at 18" cts. Top of Top Slab

* a bars in skew portion of slab shall be ordered full length & cut to fit. Balance of bar to be used in opposite end of culvert.

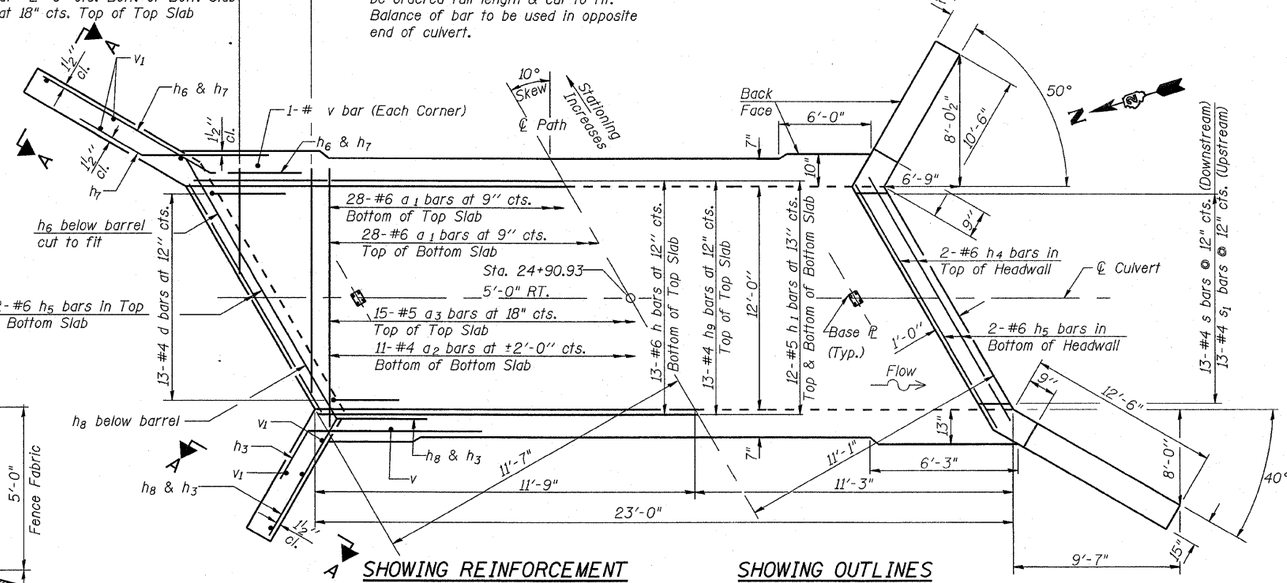

SHOWING REINFORCEMENT

SHOWING OUTLINES

PLAN

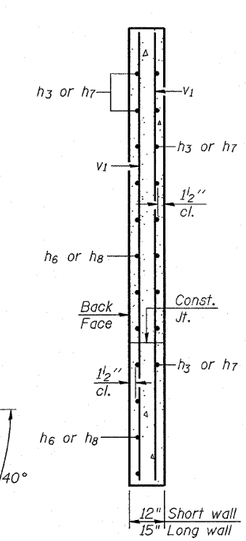

SECTION A-A

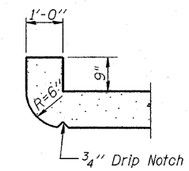

SECTION THRU HEADWALL
(Up Stream End Only)

DESIGN STRESSES

fy = 60,000 psi
f'c = 3,500 psi

LOADING H-5

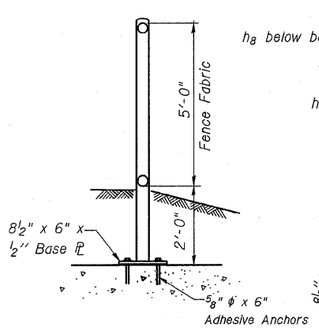

FENCE DETAILS

See Std. 664001 for Chain Link fence beyond the Culvert

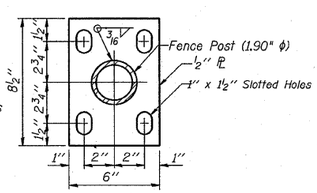

BASE ℄ DETAILS

NOTES

A distance of half the length of the wingwall but not less than six feet of the barrel shall be poured monolithically with the wingwalls.

Reinforcement bars shall conform to the requirements of ASTM A 706 Gr 60. See Special Provisions.

Bars indicated thus 12 x 4-#5 etc. indicates 12 lines of bars with 4 lengths per line.

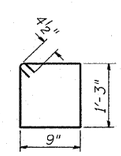

BAR s

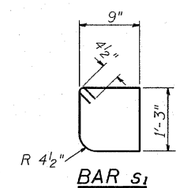

BAR s1

Exp. 11/30/2010
JOHN B. FELLMAN
081-006157
LICENSED STRUCTURAL ENGINEER
STATE OF ILLINOIS
John B. Fellman
4-1-2009

REVISIONS	
NAME	DATE

ILLINOIS DEPARTMENT OF TRANSPORTATION

CULVERT DETAILS
STA. 24 + 90.93

SCALE: NTS
DATE 3/31/09
DRAWN BY MHM
CHECKED BY JBF

SSB-H-L 5-16-08

PLOT DATE = $DATE$
FILE NAME = $FILEN$
PLOT SCALE = $SCALE$
USER NAME = $USERN$