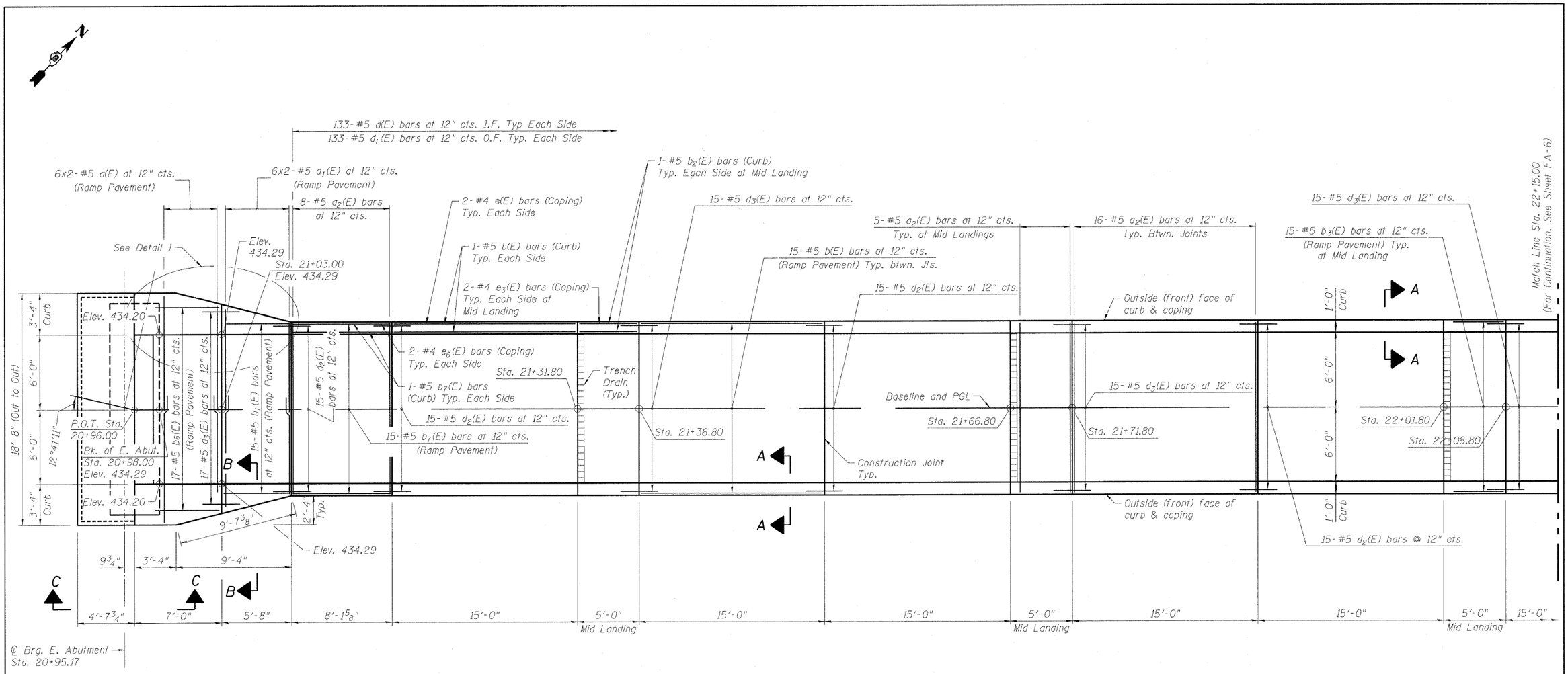

RAMP PAVEMENT PLAN

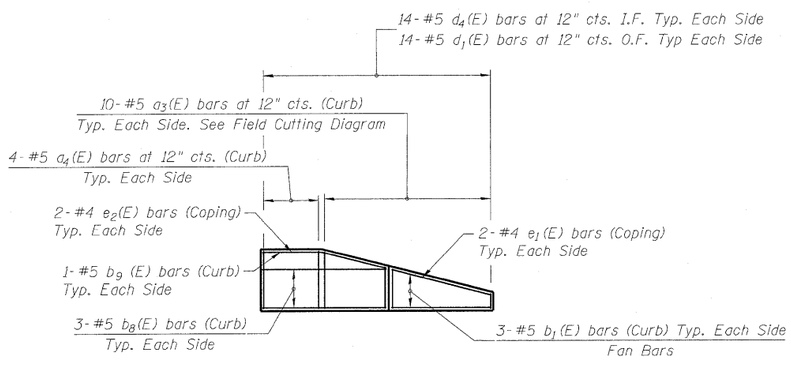

DETAIL 1

LEGENDS:

I.F. Inside Face
O.F. Outside Face

MINIMUM BAR LAPS

#5 bars = 2'-2"
#4 bars = 1'-8"

NOTES:

1. For Typical Section thru the Ramp/Wall, see Sheet EA-2.
2. For Section A-A, Section B-B & View C-C See Sheet EA-8.
3. For Bill of Material, see Sheet EA-8.
4. Work this sheet with Sheet EA-6, EA-7 and EA-8.
5. All dimensions measured along outside face of Curb/Coping.
6. Bars indicated thus 20x3-#5, etc. indicates 20 lines of bars with 3 lengths per line.

FILE NAME = 082-W229_76C47_S05_GD-01.dgn	USER NAME = bhatta	DESIGNED - DD	REVISED -	STATE OF ILLINOIS DEPARTMENT OF TRANSPORTATION	RAMP PAVEMENT PLAN (1 OF 3) STRUCTURE NO. 082-W229	F.A. RTE.	SECTION	COUNTY	TOTAL SHEETS	SHEET NO.
		DRAWN - DD	REVISED -			64	82-1-1HBR	ST. CLAIR	93	83
	PLOT SCALE = 2:1 ':' / IN.	CHECKED - ATB	REVISED -					CONTRACT NO. 76C47		
	PLOT DATE = 5/1/2009	DATE - 05/01/09	REVISED -		SCALE: SHEET NO. OF SHEETS STA. TO STA.	FED. ROAD DIST. NO.	ILLINOIS	FED. AID PROJECT		