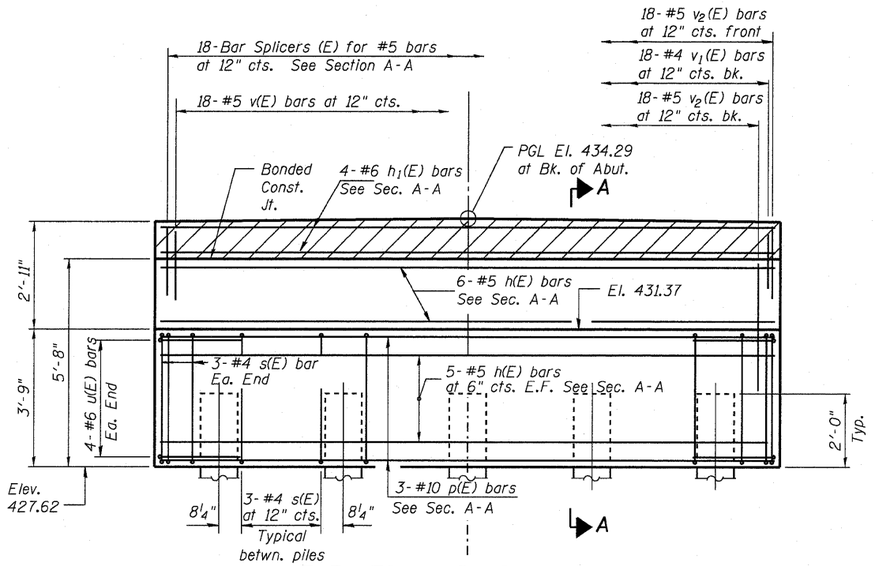

ELEVATION - EAST ABUTMENT

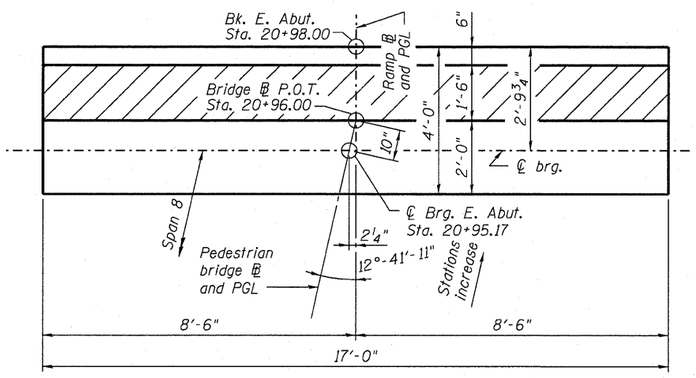

TOP VIEW

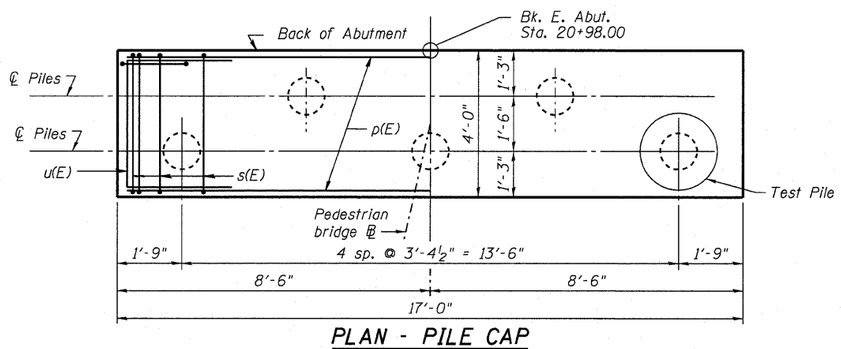

PLAN - PILE CAP

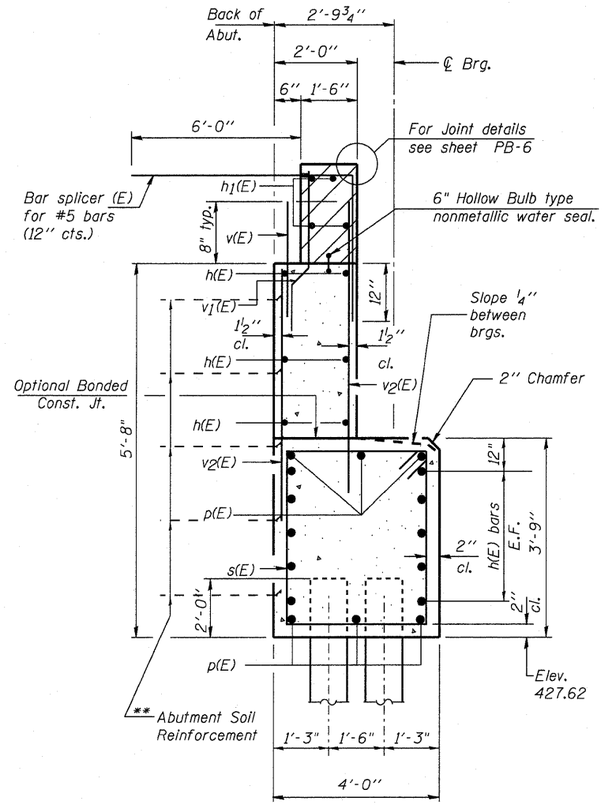

SECTION A-A

Dimensions at rt. angles

** MSE wall supplier shall design the Abutment Soil Reinforcement to resist a horizontal force of 2.40 kips/ft. Contractor shall coordinate abutment construction with construction of MSE Retaining wall 082-W229.

EAST ABUTMENT PILE DATA

Type: Metal Shell 12" dia. x ¼" wall with Pile Shoes
Nominal Required Bearing: 355 kips
Allowable Resistance Available: 80 kips
Estimated Pile Length: 68 ft
Number of Production Piles: 4
Number of Test Piles: 1

EAST ABUTMENT BILL OF MATERIAL

Bar	No.	Size	Length	Shape
h(E)	16	#5	16'- 8"	
h_1(E)	4	#6	16'- 8"	
p(E)	6	#10	16'- 8"	
s(E)	18	#4	14'- 11"	
u(E)	8	#6	9'- 1"	
v(E)	18	#5	2'- 6"	
v_1(E)	18	#4	2'- 10"	
v_2(E)	36	#5	4'- 5"	
Concrete Structures			Cu. Yd.	11.9
Reinforcement Bars, Epoxy Coated			Pound	1,350
Furnishing Metal Shell Piles 12" x 0.250"			Foot	280
Driving Piles			Foot	272
Test Pile			Each	1
Pile Shoes			Each	5
Concrete Sealer			Sq. Ft.	138
Bar Splicers			Each	18

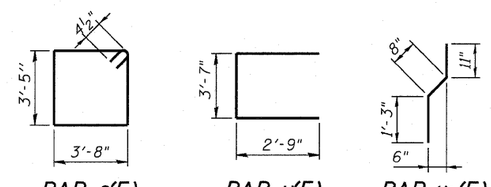

BAR s(E) BAR u(E) BAR v_1(E)

Notes:

1. Piles shall be driven through 18 inch diameter precored holes extending to elevation 402 according to Article 512.09(c) of the Standard Specifications. Cost included in driving piles.
2. Piles shall be driven prior to placement of reinforced select backfill of MSE Retaining Wall 082-W229. Piles shall be coated with Coal Tar Epoxy from 1" above bottom of the abutment to the bottom of reinforced select backfill. The cost of Coal Tar Epoxy coating shall be included with the cost of "Furnishing Metal Shell Piles 12" x 0.25"".
3. Contractor shall coordinate construction of West Abutment with design and construction of MSE Retaining Wall 082-W229.
4. Hatched area shall be poured after superstructure forms have been removed. Cost shall be included with "Pedestrian Truss Superstructure".
5. Space reinforcement in the abutment to miss anchor bolts.
6. For details of Bar Splicers, see Sheet PB-10.
7. All edges shall have standard ¾" chamfers except as noted.
8. For Anchor bolt details see sheet PB-5.

FILE NAME = 082-0394_76C47_S09_ABUT-02.dgn	USER NAME = bhatta	DESIGNED - DEV	REVISED -
		DRAWN - MK	REVISED -
	PLOT SCALE = 0:1 '1' / IN.	CHECKED - ATB	REVISED -
	PLOT DATE = 6/15/2009	DATE - 05/01/09	REVISED -

STATE OF ILLINOIS
DEPARTMENT OF TRANSPORTATION

EAST ABUTMENT
STRUCTURE NO. 082-0394

SCALE: | SHEET NO. OF SHEETS | STA. TO STA.

F.A. RTE.	SECTION	COUNTY	TOTAL SHEETS	SHEET NO.
64	82-1-IHBR	ST. CLAIR	93	50
		CONTRACT NO. 76C47		
FED. ROAD DIST. NO.	ILLINOIS	FED. AID PROJECT		