CONTRACT NO. 63095

F.A.U. RTE.	SECTION	COUNTY	TOTAL SHEETS	SHEET NO.
1503	08-00260-01-PV	KANE	176	114
STA.		TO STA.		
FED. ROAD DIST. NO.	ILLINOIS	FED. AID PROJECT		

EROSION BLANKET PLAN

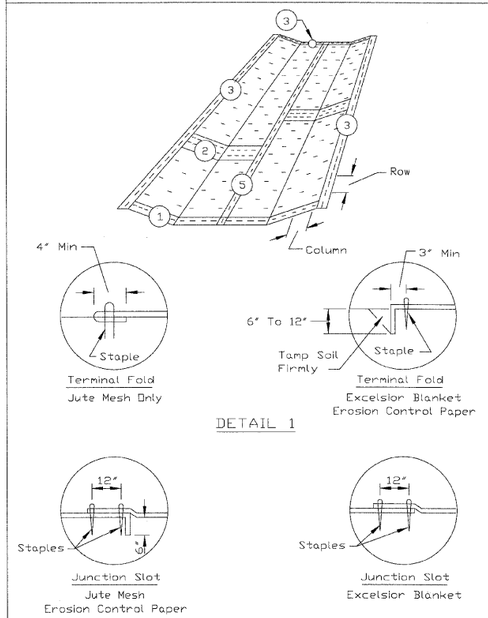

REFERENCE
Project
Designed Date
Checked Date
Approved Date

NRCS Natural Resources Conservation Service

STANDARD DWG. NO. IL-530
SHEET 1 OF 2
DATE 8-24-94

EROSION BLANKET PLAN

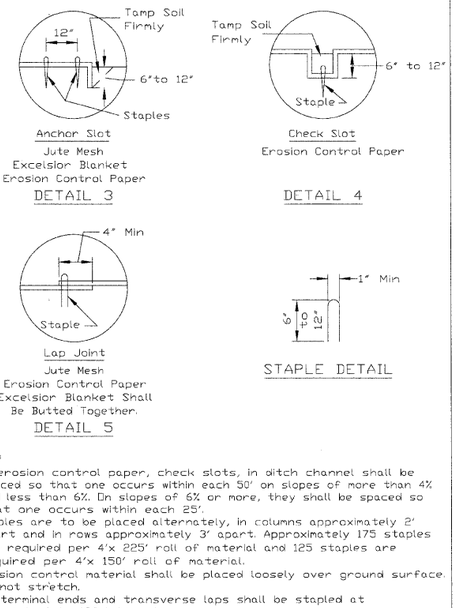

NOTES:
1. On erosion control paper, check slots, in ditch channel shall be spaced so that one occurs within each 50' on slopes of more than 4% and less than 6%. On slopes of 6% or more, they shall be spaced so that one occurs within each 25'.
2. Staples are to be placed alternately, in columns approximately 2' apart and in rows approximately 3' apart. Approximately 175 staples are required per 4'x 225' roll of material and 125 staples are required per 4'x 150' roll of material.
3. Erosion control material shall be placed loosely over ground surface. Do not stretch.
4. All terminal ends and transverse laps shall be stapled at approximately 12" intervals.

REFERENCE
Project
Designed Date
Checked Date
Approved Date

NRCS Natural Resources Conservation Service

STANDARD DWG. NO. IL-530
SHEET 2 OF 2
DATE 3-1-95

STABILIZED CONSTRUCTION ENTRANCE PLAN

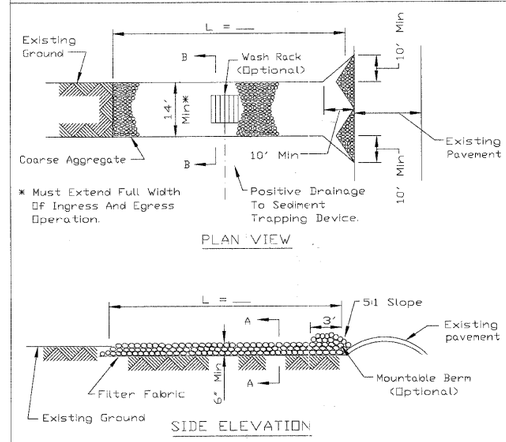

NOTES:
1. Filter fabric shall meet the requirements of material specification 592 GEOTEXTILE, Table I or 2, Class I, II or IV and shall be placed over the cleared area prior to the placing of rock.
2. Rock or reclaimed concrete shall meet one of the following IDOT coarse aggregate gradation, CA-1, CA-2, CA-3 or CA-4 and be placed according to construction specification 25 ROCKFILL using placement Method 1 and Class III compaction.
3. Any drainage facilities required because of washing shall be constructed according to manufacturers specifications.
4. If wash racks are used they shall be installed according to the manufacturer's specifications.

REFERENCE
Project
Designed Date
Checked Date
Approved Date

NRCS Natural Resources Conservation Service

STANDARD DWG. NO. IL-630
SHEET 1 OF 2
DATE 8-18-94

STABILIZED CONSTRUCTION ENTRANCE PLAN

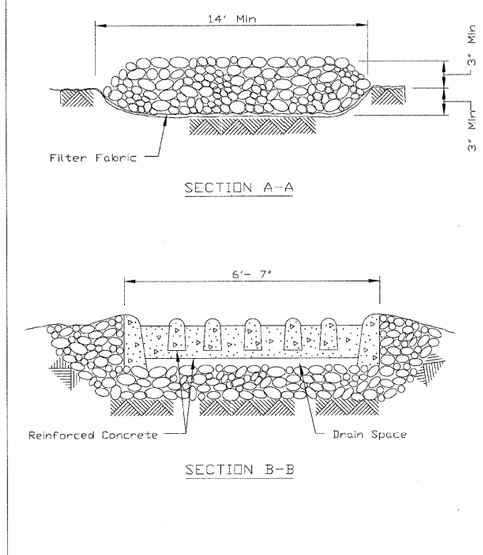

REFERENCE
Project
Designed Date
Checked Date
Approved Date

NRCS Natural Resources Conservation Service

STANDARD DWG. NO. IL-630
SHEET 2 OF 2
DATE 8-18-94

REVISIONS	
NAME	DATE

RHA&A
Robert H. Anderson & Associates, Inc.
Consulting Engineers & Land Surveyors
License No. 184-005281
Phone No. 630-584-3530

ILLINOIS DEPARTMENT OF TRANSPORTATION

CONSTRUCTION DETAILS

SCALE: VERT. HORIZ. NONE
DATE 1/7/09
DRAWN BY
CHECKED BY TC

PLOT DATE = 1/5/2009
FILE NAME = H:\Aurora\120059_ITPhII\Civil\Sht\Details_EROSI.dgn
PLOT SCALE = NONE
USER NAME = USER_