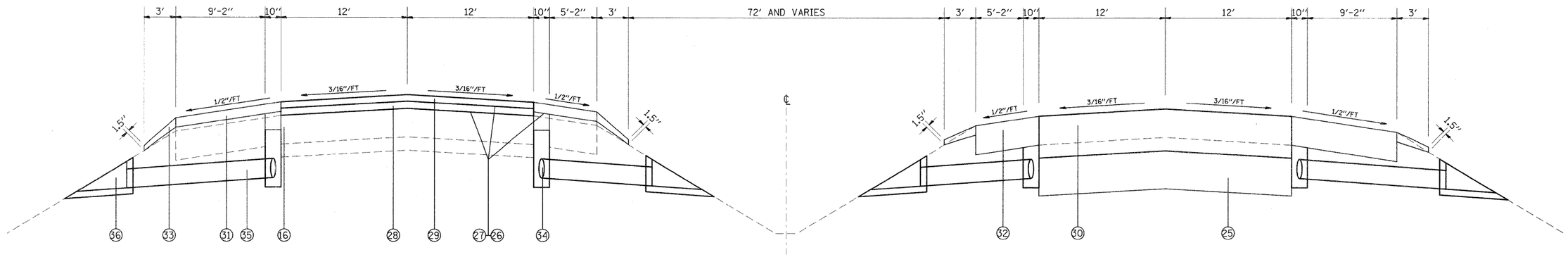

TYPICAL SECTION

STA 362+05 TO STA 365+09
SEE PLAN VIEW AND DETAILS FOR LIMITS OF SHOULDER REPLACEMENT

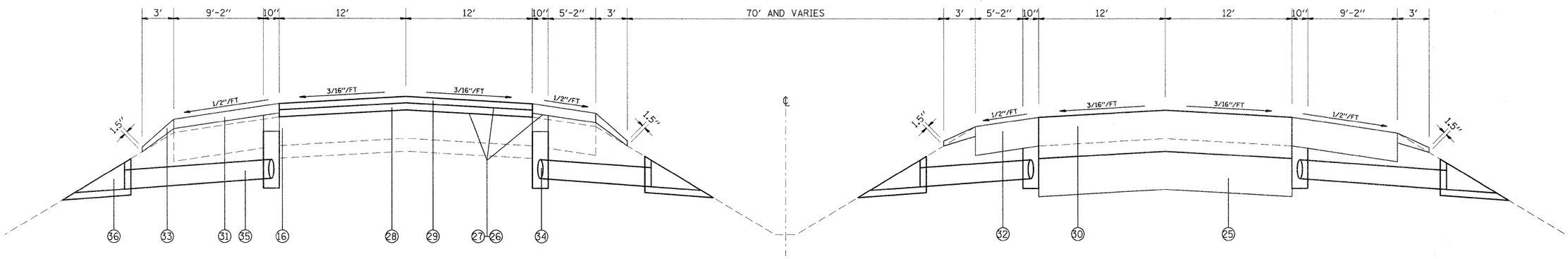

TYPICAL SECTION

STA 408+88 TO STA 411+28
SEE PLAN VEIW AND DETAILS FOR LIMITS OF SHOULDER REPLACEMENT

1. EXISTING STABILIZED SUBBASE, 4"
2. EXISITNG PCC PAVEMENT, 8"
3. EXISTING CRC PAVEMENT, 9"
4. EXISTING HMA BINDER COURSE, 1 3/4"
5. EXISTING HMA SURFACE COURSE, 1 1/2"
6. EXISTING STABILIZED SHOULDER, 8"
7. EXISTING STABILIZED SHOULDER, 9"
8. EXISTING BITUMINOUS SHOULDER, 5"
9. EXISTING BITUMINOUS SHOULDER, VARIABLE DEPTH
10. EXISTING AGGREGATE WEDGE SHOULDER
11. EXISTING PIPE DRAIN, 4"
12. EXISTING PIPE DRAIN (SPECIAL), 4"
13. EXISTING PIPE DRAIN, 6"
14. EXISTING PIPE DRAIN (SPECIAL), 6"
15. EXISTING CONCRETE HEADWALLS FOR PIPE UNDERDRAINS
16. PROPOSED SHOULDER REMOVAL AND REPLACEMENT, 12.5"
17. PROPOSED PAVED SHOULDER REMOVAL, 9"
18. PROPOSED PAVED SHOULDER REMOVAL, VARIES 10.5" TO 13.5"
19. PROPOSED HMA SURFACE REMOVAL, 3 1/4"
20. PROPOSED HMA SURFACE REMOVAL, VARIABLE DEPTH
21. PROPOSED PAVEMENT REMOVAL, 13"
22. PROPOSED PAVEMENT REMOVAL, 16.25"
23. PROPOSED EARTH EXCAVATION, 12"
24. PROPOSED PIPE UNDERDRAIN REMOVAL
25. PROPOSED AGGREGATE BASE COURSE, TYPE A 12"
26. PROPOSED AGGREGATE (PRIME COAT)
27. PROPOSED BITUMINOUS MATERIALS (PRIME COAT)
28. PROPOSED POLY HMA BINDER COURSE, 2.25"
29. PROPOSED POLY HMA SURFACE COURSE, SMA, 2"
30. PROPOSED CONTINUOSLY REINFORCED CONCRETE PAVEMENT, 13"
31. PROPOSED HMA SHOULDERS
32. PROPOSED HMA SHOULDERS, 9"
33. PROPOSED AGGREGATE SHOULDER WEDGE
34. PROPOSED PIPE UNDERDRAINS, 4"
35. PROPOSED PIPE UNDERDRAINS (SPECIAL), 4"
36. PROPOSED CONCRETE HEADWALLS FOR PIPE DRAINS

FILE NAME = c:\pw_work\pwidot\conoverpj\d0128605\d876601-sht-plan.dgn	USER NAME = conoverpj	DESIGNED - ___	REVISED - ___	STATE OF ILLINOIS DEPARTMENT OF TRANSPORTATION	PROPOSED TYPICAL SECTIONS	F.A.I. RTE.	SECTION	COUNTY	TOTAL SHEETS	SHEET NO.
		DRAWN - ___	REVISED - ___			55	60-3RS-1, 60-(3HB, 3HB-1)I	MADISON	123	10
	PLOT SCALE = 50.0000 ' / IN.	CHECKED - ___	REVISED - ___					CONTRACT NO. 76601		
	PLOT DATE = 6/23/2010	DATE - _____	REVISED - ___		SCALE: _____ SHEET NO. 2 OF 2 SHEETS STA. _____ TO STA. _____	FED. ROAD DIST. NO. _	ILLINOIS	FED. AID PROJECT		