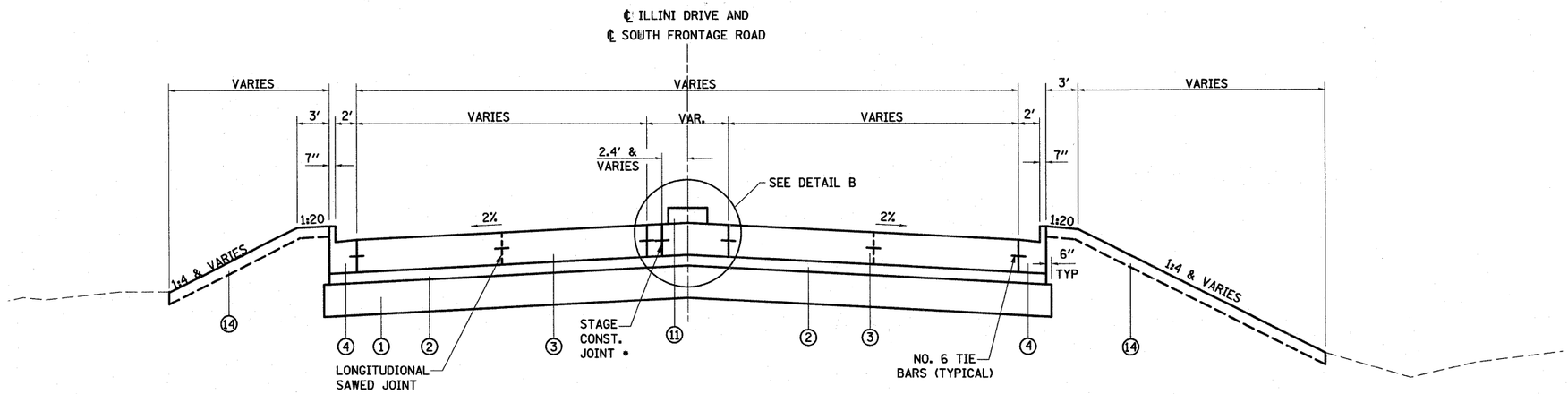

PROPOSED TANGENT SECTION
PROPOSED ILLINI DRIVE AND SOUTH FRONTAGE ROAD

• STAGE CONSTRUCTION JOINT AT 2.4' LT AND VARIES ON SOUTH FRONTAGE ROADE AND AT 0.0' AND VARIES ON ILLINI DRIVE

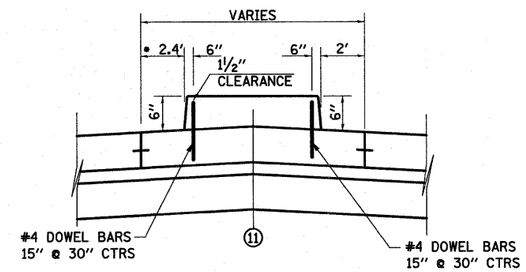

DETAIL B
CONCRETE MEDIAN, TYPE SB-6.06 (DOWELLED)

LEGEND

1. PROPOSED LIME MODIFIED SOIL 12"
2. PROPOSED STABILIZED SUB-BASE 4" (BAM)
3. PROPOSED PORTLAND CEMENT CONCRETE PAVEMENT 10" (JOINTED)
4. PROPOSED COMBINATION CONCRETE CURB AND GUTTER, TYPE B-6.24
5. PROPOSED PORTLAND CEMENT CONCRETE SIDEWALK 4"
6. PROPOSED CONCRETE MEDIAN SURFACE, 4"
7. PROPOSED CORRUGATED MEDIAN
8. PROPOSED COMBINATION CONCRETE CURB AND GUTTER, TYPE B-6.06
9. PROPOSED BRIDGE APPROACH SLAB (SEE STRUCTURE PLANS)
10. PROPOSED SUB-BASE GRANULAR MATERIAL, TYPE C
11. PROPOSED CONCRETE MEDIAN, TYPE SB (DOWELLED)
12. PROPOSED PORTLAND CEMENT CONCRETE PAVEMENT 10 1/2 " (JOINTED)
13. PROPOSED AGGREGATE SHOULDERS, TYPE B 6"
14. PROPOSED TOPSOIL 4"
15. PROPOSED PIPE UNDERDRAINS 4"
16. PROPOSED PORTLAND CEMENT CONCRETE PAVEMENT, 12"
17. PROPOSED PAVEMENT FABRIC
18. PROPOSED AGGREGATE BASE COURSE, TYPE B, 8"
19. PROPOSED AGGREGATE SHOULDER TYPE B
20. PROPOSED LIME MODIFIED SOIL 18"

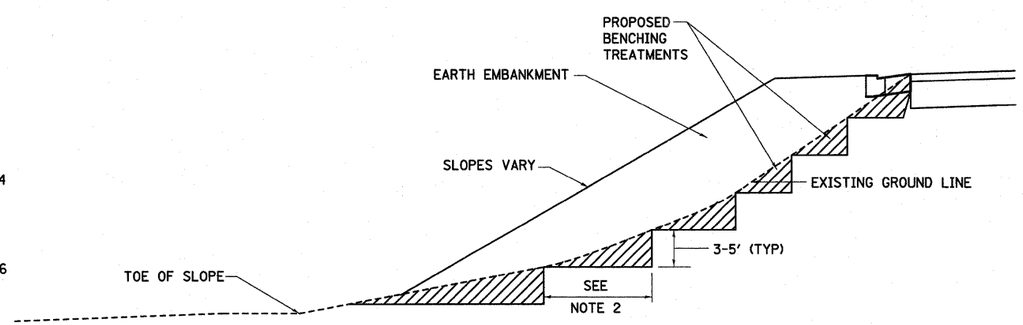

TYPICAL

GENERAL NOTES:

1. SLOPE STEPS WILL BE REQUIRED WHEN EMBANKMENTS ARE TO BE CONSTRUCTED ON HILLSIDES OR EXISTING EMBANKMENT SLOPES.
2. THE STEP WIDTH SHALL BE TWICE THE STEP DEPTH BUT NOT LESS THAN 6'.
3. REFER TO ARTICLE 205.03 FOR EMBANKMENT TO BE CONSTRUCTED ON HILLSIDE OR SLOPES, OR IF EXISTING EMBANKMENTS ARE TO BE WIDENED.
4. THIS WORK WILL NOT BE PAID FOR SEPARATELY BUT SHALL BE CONSIDERED AS INCLUDED IN THE VARIOUS ITEMS OF EXCAVATION, AND THEIR CONSTRUCTION SHALL BE INCLUDED IN THE UNIT PRICES FOR THESE ITEMS.

FILE NAME = S:\Projects\403-00072_57-70\dgn\Fayette\typsecFay.dgn	USER NAME = paul	DESIGNED - JWS	REVISED - 08-02-10	STATE OF ILLINOIS DEPARTMENT OF TRANSPORTATION	PROPOSED TYPICAL SECTIONS ILLINI DRIVE AND SOUTH FRONTAGE ROAD	F.A.I. RTE.	SECTION	COUNTY	TOTAL SHEETS / SHEET NO.
		DRAWN - BOB	REVISED -			57/70	(25-3)I-6	EFFINGHAM	839 / 29
	PLOT SCALE = 50.0000 ' / IN.	CHECKED - BRM	REVISED -					CONTRACT NO. 74293	
	PLOT DATE = 8/2/2010	DATE - 11-05-07	REVISED -		SCALE: 1"=50' / SHEET NO. 1 OF 1 SHEETS / STA. TO STA.	FED. ROAD DIST. NO.	ILLINOIS	FED. AID PROJECT	