STRUCTURAL DESIGN INFORMATION
FAYETTE RAMPS A, B, C, AND D

ROAD CLASSIFICATION: CLASS I

STRUCTURAL DESIGN TRAFFIC: 2030
PV = 3,594 SU = 266 MU = 1,930

PERCENT OF STRUCTURAL DESIGN TRAFFIC IN DESIGN LANE
P = 100% S = 100% M = 100%

MINIMUM SUBGRADE SUPPORT RATING: POOR

RIGID PAVEMENT DESIGN: MINIMUM TF_F = 13.40
ACTUAL TF_F = 27.66 ⚠

SELECTED DESIGN 10.5 JRCP ⚠

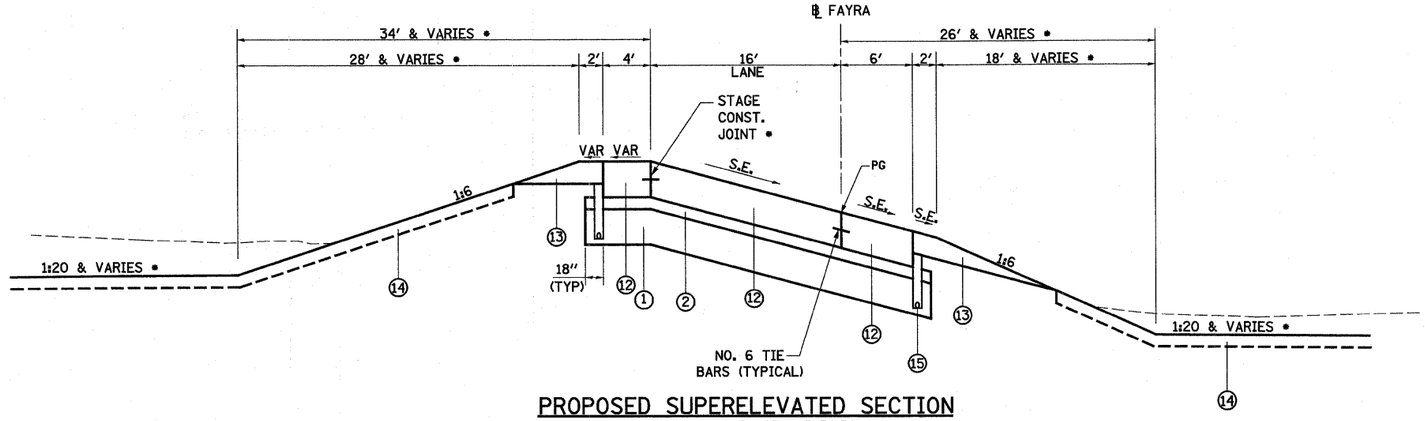

PROPOSED SUPERELEVATED SECTION

STA 12+40.00 TO STA 15+39.36
STA 16+32.03 TO STA 20+88.23 (REVERSED)

• STAGE CONSTRUCTION JOINT
FROM STA 12+40.00 TO STA 14+17.96

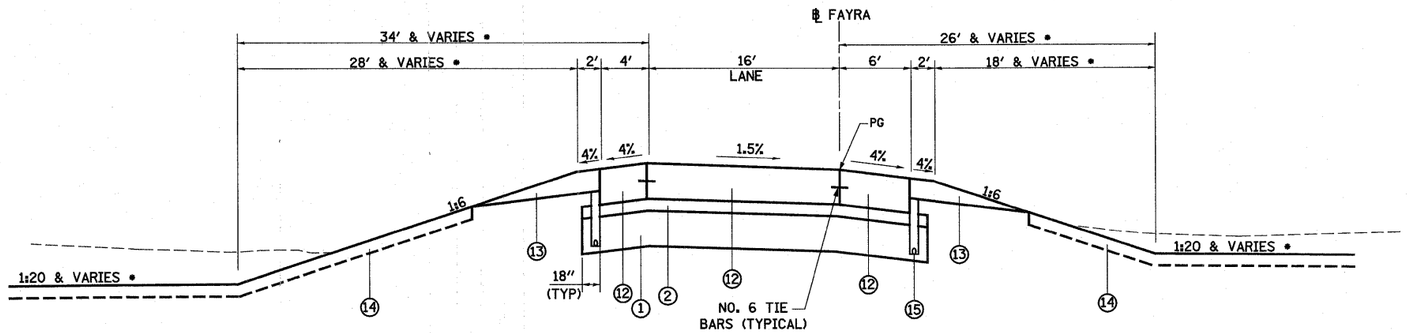

PROPOSED TANGENT SECTION

STA 15+39.36 TO STA 15+90.50
STA 15+90.50 TO STA 16+32.03 (REVERSED)

LEGEND

1. PROPOSED LIME MODIFIED SOIL 12″
2. PROPOSED STABILIZED SUB-BASE 4″ (BAM)
3. PROPOSED PORTLAND CEMENT CONCRETE PAVEMENT 10 1/4″ (JOINTED) ⚠
4. PROPOSED COMBINATION CONCRETE CURB AND GUTTER, TYPE B-6.24
5. PROPOSED PORTLAND CEMENT CONCRETE SIDEWALK 4″
6. PROPOSED CONCRETE MEDIAN SURFACE, 4″
7. PROPOSED CORRUGATED MEDIAN
8. PROPOSED COMBINATION CONCRETE CURB AND GUTTER, TYPE B-6.06
9. PROPOSED BRIDGE APPROACH SLAB (SEE STRUCTURE PLANS)
10. PROPOSED SUB-BASE GRANULAR MATERIAL, TYPE C
11. PROPOSED CONCRETE MEDIAN, TYPE SB (DOWELLED)
12. PROPOSED PORTLAND CEMENT CONCRETE PAVEMENT 10 1/2 ″ (JOINTED)
13. PROPOSED AGGREGATE SHOULDERS, TYPE B 6″
14. PROPOSED TOPSOIL 4″
15. PROPOSED PIPE UNDERDRAINS 4″
16. PROPOSED PORTLAND CEMENT CONCRETE PAVEMENT, 12″
17. PROPOSED PAVEMENT FABRIC
18. PROPOSED AGGREGATE BASE COURSE, TYPE B, 8″
19. PROPOSED AGGREGATE SHOULDER TYPE B
20. PROPOSED LIME MODIFIED SOIL 18″

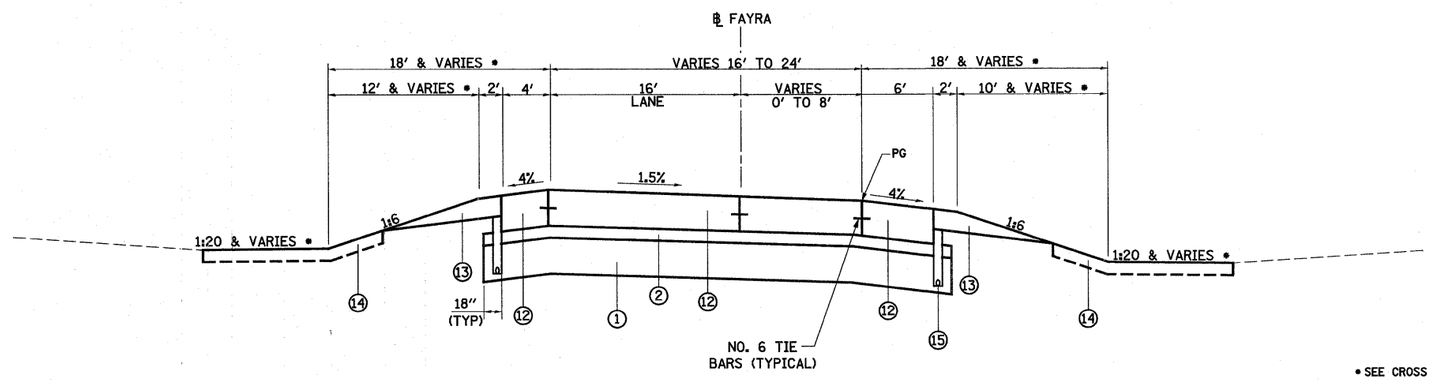

• SEE CROSS SECTIONS

PROPOSED TANGENT SECTION

STA 20+88.23 TO STA 21+27.23 (REVERSED)
STA 21+27.23 TO STA 22+45.20

PROPOSED FAYETTE AVE. RAMP A

FILE NAME	USER NAME = linda	DESIGNED - JWS	REVISED - 08-02-10	STATE OF ILLINOIS DEPARTMENT OF TRANSPORTATION	PROPOSED TYPICAL SECTIONS – FAYETTE AVE, RAMP A	F.A.I. RTE.	SECTION	COUNTY	TOTAL SHEETS	SHEET NO.
403-00072_57-70_dgn_Fayette_Addendum_typsecFayRamps.dgn		DRAWN - PDB	REVISED - 08-26-10 ⚠			57/70	(25-3)I-6	EFFINGHAM	839	25
	PLOT SCALE: 0.0000 ' / IN.	CHECKED - BRM	REVISED -					CONTRACT NO. 74293		
	PLOT DATE = 8/26/2010	DATE - 11-05-07	REVISED -		SCALE: 1″=50′ SHEET NO. 1 OF 4 SHEETS STA. TO STA.	FED. ROAD DIST. NO.	ILLINOIS	FED. AID PROJECT		