CONTRACT NO. 60L81

STATE OF ILLINOIS
DEPARTMENT OF TRANSPORTATION

ROUTE NO.	SECTION	COUNTY	TOTAL SHEETS	SHEET NO.
FAP 303 IL 173	2010-086-F	LAKE	29	27
FED. ROAD DIST. NO. 7		ILLINOIS	FED. AID PROJECT-	

SHEET NO. 16
23 SHEETS

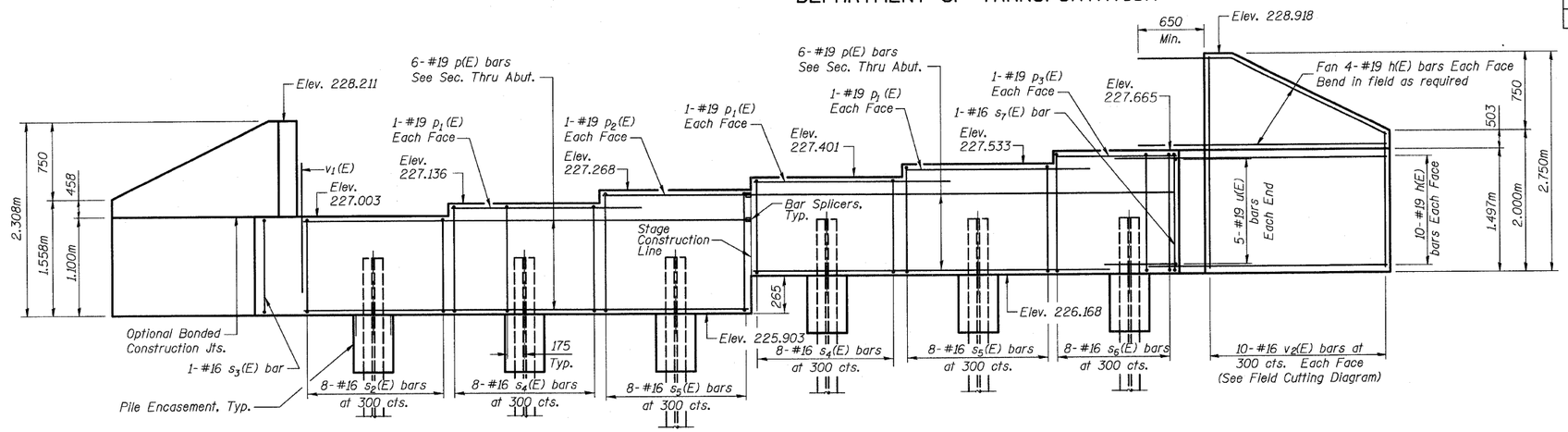

WEST ABUTMENT ELEVATION

(Looking West)

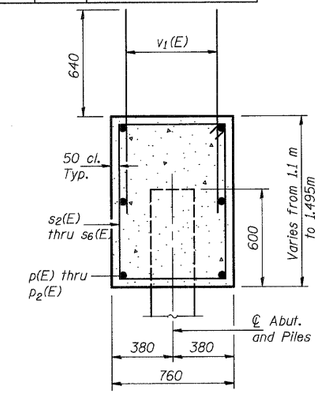

SEC. THRU ABUT.

Dimensions at right angle to abutment

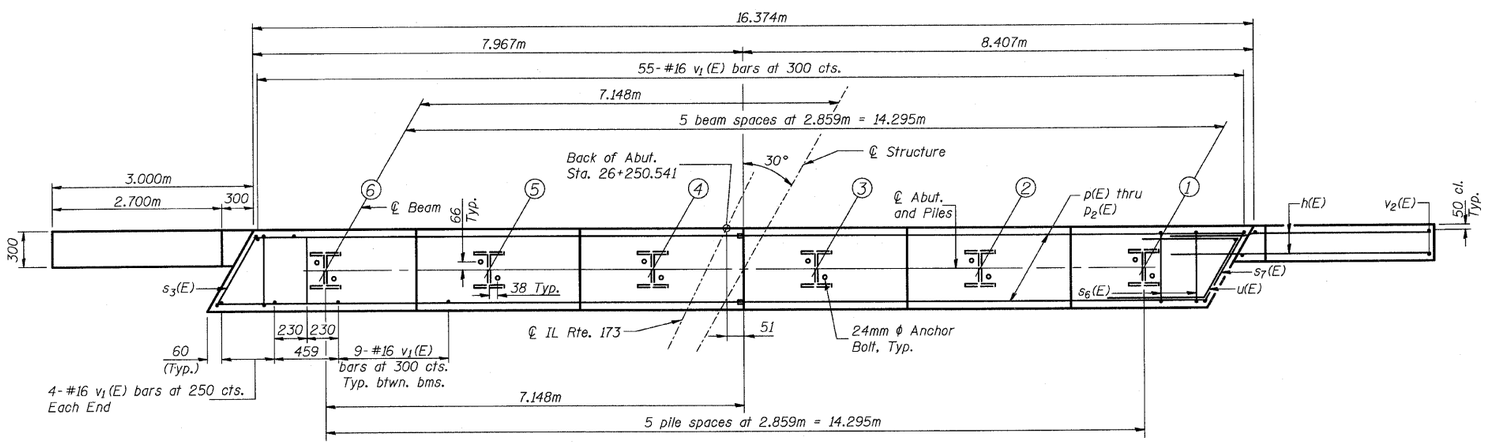

PLAN

WEST ABUTMENT BILL OF MATERIAL

Bar	No.	Size	Length	Shape
h(E)	56	#19	3.750	
p(E)	12	#19	7.887	
p_1(E)	6	#19	3.540	
p_2(E)	2	#19	2.779	
p_3(E)	2	#19	2.170	
s_2(E)	8	#16	3.600	
s_3(E)	1	#16	3.804	
s_4(E)	16	#16	3.860	
s_5(E)	16	#16	4.128	
s_6(E)	8	#16	4.390	
s_7(E)	1	#16	4.594	
u(E)	10	#19	2.804	
v_1(E)	108	#16	1.280	
v_2(E)	20	#16	4.050	
Concrete Structures			m^3	20
Concrete Encasement			m^3	2.0
Reinforcement Bars Epoxy Coated			kg	1,470
Furnishing Steel Piles HP310x79			m	105
Driving Steel Piles			m	105
Test Pile, HP310x79			each	1
Structure Excavation			m^3	550

MINIMUM BAR LAP

#19 bar = 850

PILE DATA

Type: HP 310x79
Allowable Capacity Required: 580kN
Allowable Capacity Available: 580kN
Est. Length: 20.5m
No. Production Piles Required: 5
No. Test Piles: 1

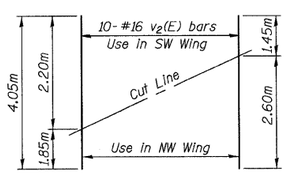

FIELD CUTTING DIAGRAM

Order v_2(E) full length. Cut as shown and use remainder of bars in opposite wingwall.

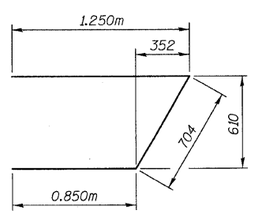

BAR u(E)

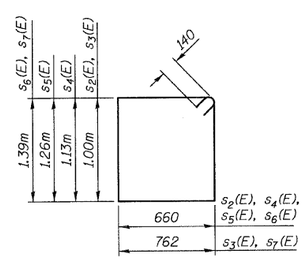

BARS s_2(E), s_3(E), s_4(E), s_5(E), s_6(E)

NOTES

Pour steps monolithically with cap.

Place reinforcement in cap to miss anchor bolts.

Reinforcement bars designated (E) shall be epoxy coated.

All dimensions are in millimeters (mm) except as noted.

Stage Construction Line differs from Stage Construction Line in the deck above due to the skew of the bridge.

See Sheet 21 for Pile Encasement details.

DESIGNED	JRF
CHECKED	RCJ
DRAWN	RDS
CHECKED	JRF

Applied Technologies

3116-044-0198.dgn

WEST ABUTMENT
FAP 303 IL. ROUTE 173
OVER EAST BOAT CHANNEL
SECTION 2010-086-F
LAKE COUNTY
STATION 26+271.906
STRUCTURE NO. 049-0198

FOR INFORMATION ONLY