STATE OF ILLINOIS
DEPARTMENT OF TRANSPORTATION

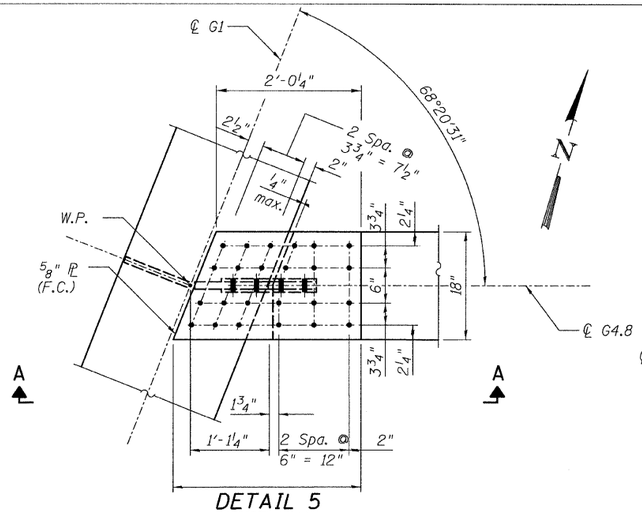

DETAIL 5
(Top Flange)

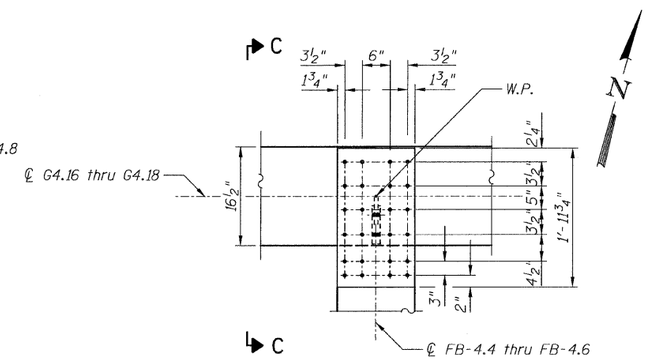

DETAIL 6
(Top Flange)
(Bot. Flange Similar)

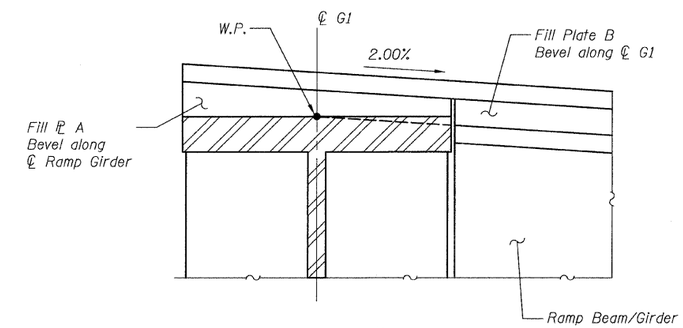

FILL PL DETAIL

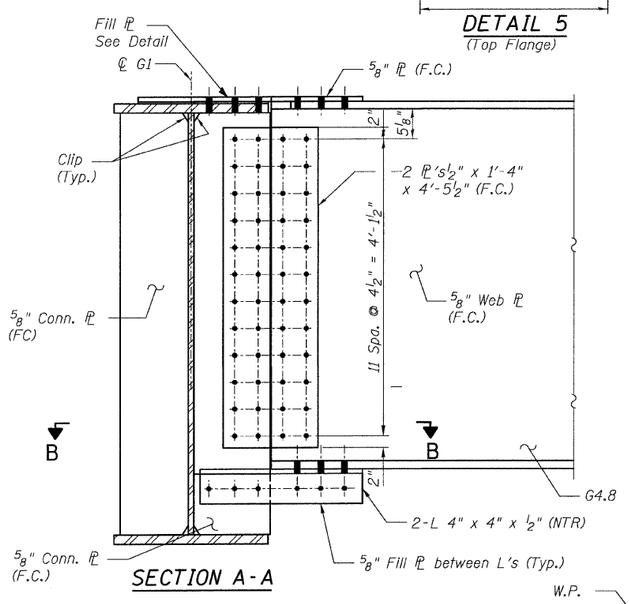

SECTION A-A

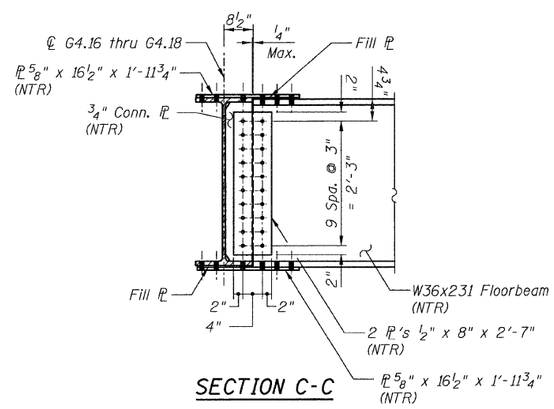

SECTION C-C

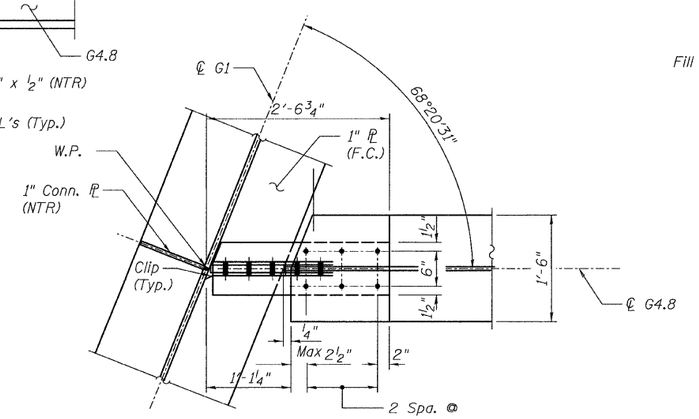

SECTION B-B
(Bottom Flange)

NOTES:

1. All steel shall be AASHTO M270 Grade 50.
2. For Details 5 and 6 locations, see Sheet 44.
3. F.C. - denotes Fracture Critical Material, AASHTO Zone II.
4. Load carrying components designated "NTR" shall conform to the Supplemental Requirements for Notch Toughness, Zone 2.

CONNECTION DETAILS 5&6
RAMP 4 FLARE
STRUCTURE NO. 016-0724

TYLIN INTERNATIONAL

DESIGNED -	EKH, JMA
CHECKED -	AMD,
DRAWN -	EKH, JMA
CHECKED -	AMD,
DATE -	08/02/10

REVISIONS	
NAME	DATE

SHEET NO. 125
137 SHEETS

F.A.I RTE.	SECTION	COUNTY	TOTAL SHEETS	SHEET NO.
55	0711.2R & 1011.1BR	COOK	200	155
		CONTRACT NO. 60L39		
FED. ROAD DIST. NO. 1	ILLINOIS	FED. AID PROJECT		

8/13/2010

p:\01345\beam and bearing fabrication\55f4f-amedt113.dgn 4:44:14 PM