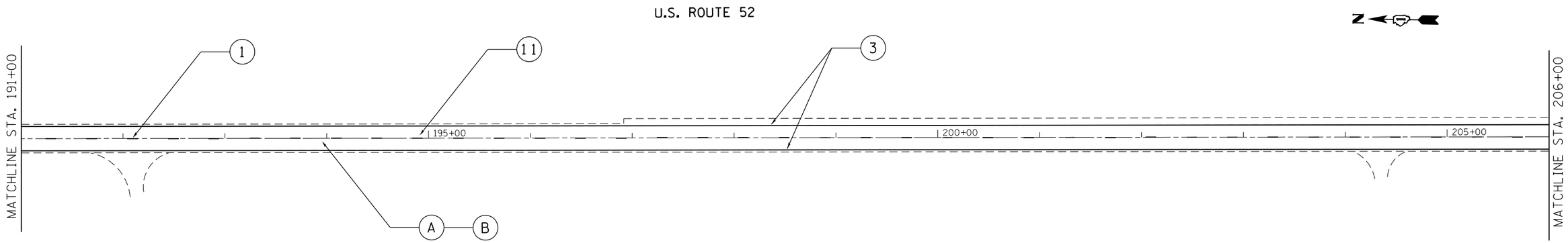

RESURFACING LEGEND

- (A) PROP. HOT IN-PLACE RECYCLING, 1"
- (B) PROP. HOT-MIX ASPHALT SURFACE COURSE, MIX "D", N70
- (C) SURFACE REMOVAL BUTT JOINT
  SEE BUTT JOINTS AND HMA TAPER DETAILS (BD32)

PAVEMENT MARKING LEGEND

- (1) THERMOPLASTIC PAVEMENT MARKING, 4" YELLOW LANE LINE (30' SKIP, 10' DASH)
- (2) THERMOPLASTIC PAVEMENT MARKING, 4" WHITE LANE LINE (6' SKIP, 2' DASH)
- (3) THERMOPLASTIC PAVEMENT MARKING, 4" SOLID WHITE LINE
- (4) THERMOPLASTIC PAVEMENT MARKING, 4" SOLID NO PASSING ZONE LINE
- (5) THERMOPLASTIC PAVEMENT MARKING, 4" DOUBLE YELLOW LINE, 11" C-C
- (6) THERMOPLASTIC PAVEMENT MARKING, 8" WHITE LINE
- (7) THERMOPLASTIC PAVEMENT MARKING, 12" DIAGONAL WHITE LINE
- (8) THERMOPLASTIC PAVEMENT MARKING, 12" LONGITUDINAL WHITE BARS
- (9) THERMOPLASTIC PAVEMENT MARKING, 24" WHITE LINE
- (10) THERMOPLASTIC PAVEMENT MARKING, LETTERS AND SYMBOLS
- (11) RAISED REFLECTIVE PAVEMENT MARKER (SEE NOTE 2)

NOTES

1. REFER TO DISTRICT 1 TYPICAL PAVEMENT MARKINGS (TC-13) FOR ADDITIONAL INFORMATION.
2. REFER TO DISTRICT 1 RAISED REFLECTIVE PAVEMENT MARKER (TC-11) FOR ADDITIONAL INFORMATION.

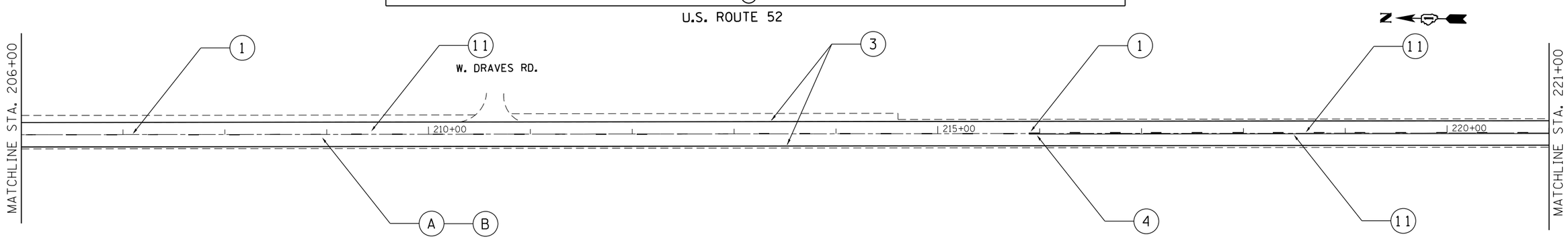

FILE NAME = c:\pw_work\pwidot\bakermo\d0331242\D118313-sht-plan.dgn	USER NAME = Bakermo	DESIGNED -	REVISED -	STATE OF ILLINOIS DEPARTMENT OF TRANSPORTATION	US 52 (2ND STREET TO US 45) ROADWAY & PAVEMENT MARKING PLAN	F.A.P. RTE.	SECTION	COUNTY	TOTAL SHEETS	SHEET NO.
		DRAWN -	REVISED -			852	(17&18) RS-6	WILL	33	14
	PLOT SCALE = 100.0000 ' / in.	CHECKED -	REVISED -					CONTRACT NO. 60W12		
Default	PLOT DATE = 6/2/2014	DATE -	REVISED -		SCALE: 1"=50' SHEET OF SHEETS STA. TO STA.		ILLINOIS	FED. AID PROJECT		