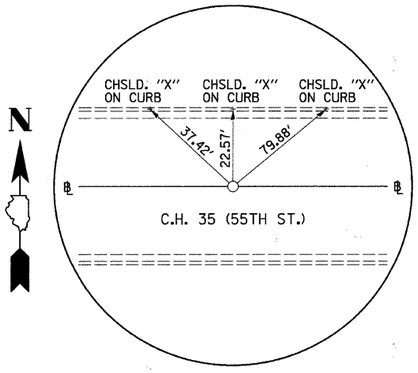

P.O.T. STA. 8+00.00
C.H. 35 (55TH ST.)
N. 1,865,531.58, E. 1,079,112.61
(MAG NAIL)

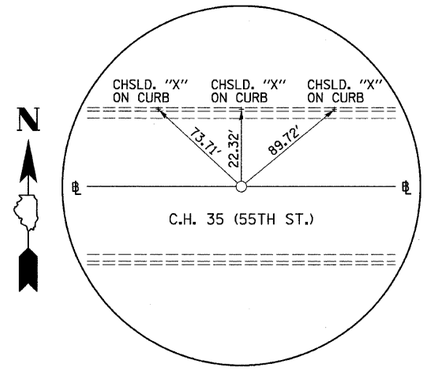

P.O.T. STA. 9+46.90
C.H. 35 (55TH ST.)
N. 1,865,535.49, E. 1,079,259.45
(MAG NAIL)

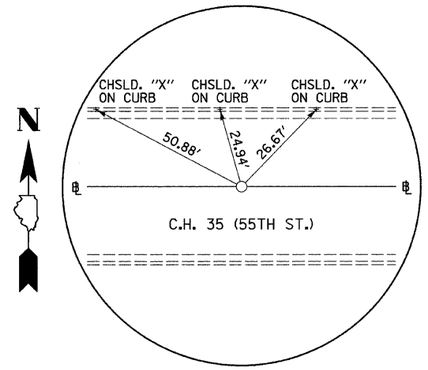

P.I. STA. 10+79.46
C.H. 35 (55TH ST.)
N. 1,865,539.02, E. 1,079,391.97
(MAG NAIL)

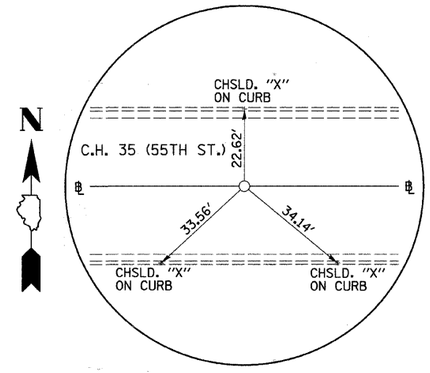

P.O.T. STA. 16+00.00
C.H. 35 (55TH ST.)
N. 1,865,552.83, E. 1,079,912.30
(MAG NAIL)

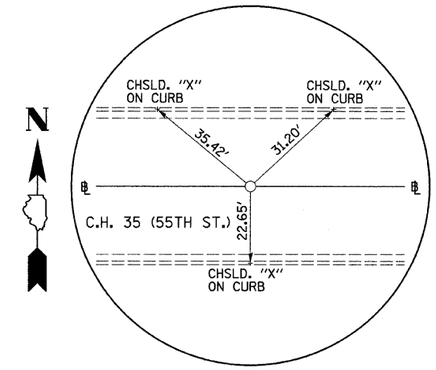

P.O.T. STA. 26+00.00
C.H. 35 (55TH ST.)
N. 1,865,579.36, E. 1,080,911.91
(MAG NAIL)

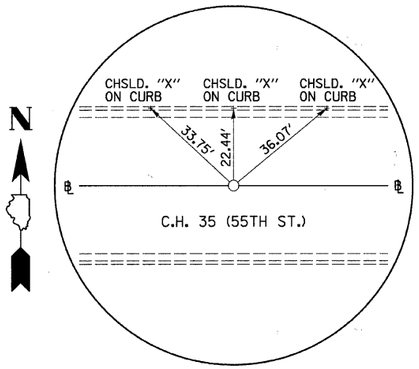

P.O.T. STA. 30+00.00
C.H. 35 (55TH ST.)
N. 1,865,589.97, E. 1,081,311.83
(MAG NAIL)

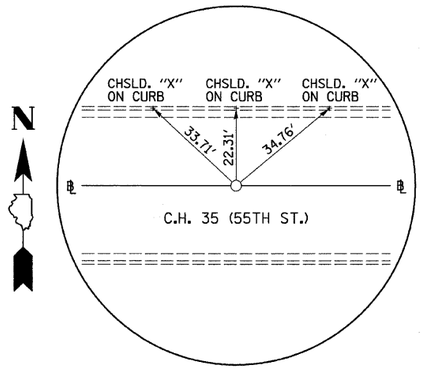

P.I. STA. 35+69.31
C.H. 35 (55TH ST.)
N. 1,865,605.08, E. 1,081,880.94
(MAG NAIL)

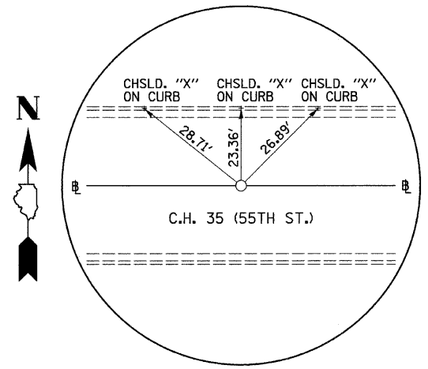

P.I. STA. 46+47.87
C.H. 35 (55TH ST.)
N. 1,865,639.58, E. 1,082,958.94
(MAG NAIL)

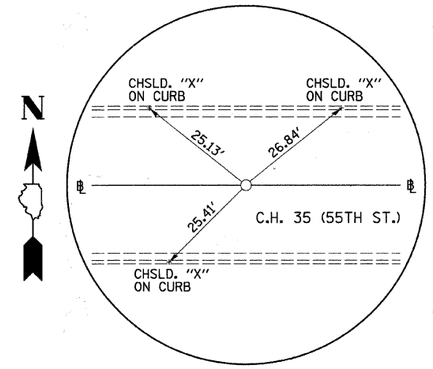

P.I. STA. 52+38.16
C.H. 35 (55TH ST.)
N. 1,865,660.46, E. 1,083,548.86
(MAG NAIL)

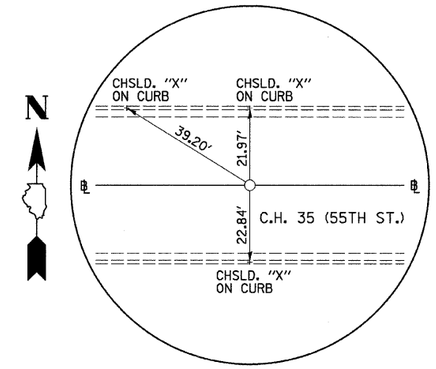

P.I. STA. 58+48.20
C.H. 35 (55TH ST.)
N. 1,865,680.02, E. 1,084,158.59
(MAG NAIL)

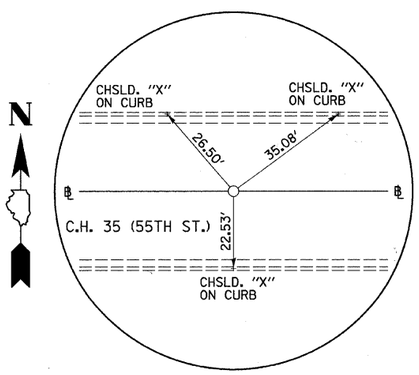

P.I. STA. 75+53.07
C.H. 35 (55TH ST.)
N. 1,865,737.03, E. 1,085,862.50
(MAG NAIL)

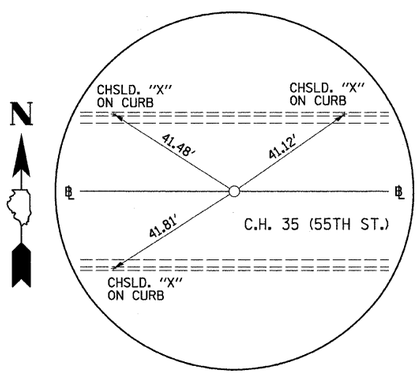

P.I. STA. 82+74.12
C.H. 35 (55TH ST.)
N. 1,865,760.49, E. 1,086,583.17
(MAG NAIL)

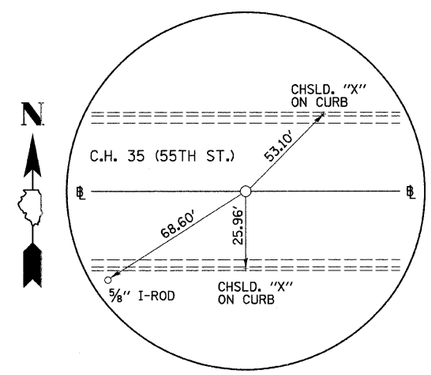

P.C. STA. 97+28.34
C.H. 35 (55TH ST.)
N. 1,865,809.94, E. 1,088,036.56
(CHSLD. "V")

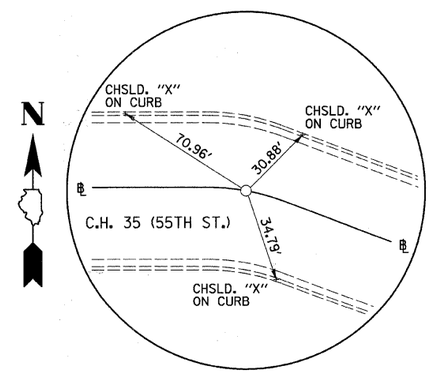

P.I. STA. 98+41.18
C.H. 35 (55TH ST.)
N. 1,865,813.77, E. 1,088,149.33
(CHSLD. "X")

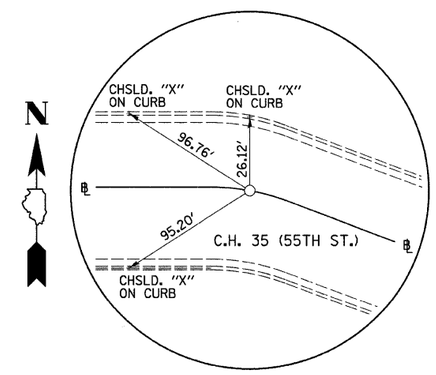

P.T. STA. 99+53.85
C.H. 35 (55TH ST.)
N. 1,865,806.69, E. 1,088,261.95
(SURVEY SPIKE)

FILE NAME = V:\2791\2791a003.dgn	USER NAME = shughes	DESIGNED -	REVISED -
		DRAWN -	REVISED -
	PLOT SCALE = 100.0000 ' / IN.	CHECKED -	REVISED -
	PLOT DATE = 5/19/2011	DATE -	REVISED -

STATE OF ILLINOIS
DEPARTMENT OF TRANSPORTATION

C.H. 35 (55TH ST.), TIE POINTS

SCALE: N/A | SHEET NO. 1 OF 3 SHEETS | STA. N/A | TO STA. N/A

F.A.U. RTE.	SECTION	COUNTY	TOTAL SHEETS	SHEET NO.
1504	94-00302-00-FP	DU PAGE	240	34
		CONTRACT NO. 63609		
		ILLINOIS FED. AID PROJECT		