| PLAN | | BY | DATE |
|---|---|---|---|
| | SURVEYED | | |
| | PLOTTED | | |
| | ALIGNMENT CHECKED | | |
| NOTE BOOK | RT. OF WAY DOCKED | | |
| NO. | CADD FILE NAME | | |

| PROFILE | | BY | DATE |
|---|---|---|---|
| | SURVEYED | | |
| | PLOTTED | | |
| | GRADES CHECKED | | |
| NOTE BOOK | BASIS OF PAY | | |
| NO. | STRUCTURE NOTATNS CHKD | | |

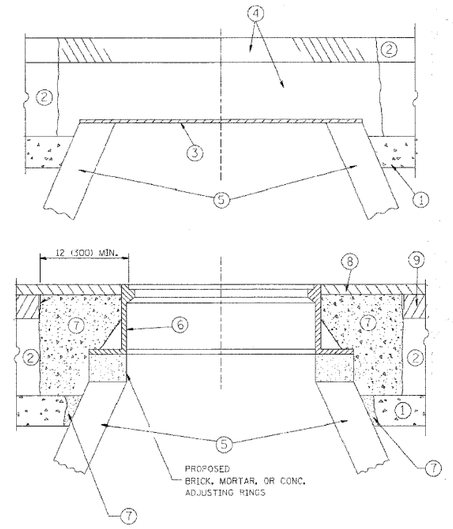


NOTES:

EXISTING BROKEN FRAMES AND LIDS SHALL BE REMOVED AND DISPOSED OF BY THE CONTRACTOR AND SHALL BE REPLACED AS DIRECTED BY THE ENGINEER. REPLACEMENT FRAMES AND LIDS WILL BE PAID FOR IN ACCORDANCE WITH ARTICLE 109.04 OF THE STANDARD SPECIFICATIONS UNLESS A SEPARATE PAY ITEM HAS BEEN PROVIDED.

IF THE EXISTING LIDS ARE OPEN, THE FRAME WILL BE ADJUSTED TO THE ELEVATION OF THE MILLED PAVEMENT SURFACE PRIOR TO THE MILLING OPERATION. THE FRAME WILL NOT BE REMOVED AND COVERED BY THE METAL PLATE.

CITY OF CHICAGO CASTINGS ARE THE PROPERTY OF THE CITY AND THE CONTRACTOR SHALL NOTIFY THE CITY FOR REMOVAL AND DISPOSITION OF THE CASTINGS.

THE METAL PLATE USED TO COVER THE STRUCTURE SHALL REMAIN THE PROPERTY OF THE CONTRACTOR.

WHEN STRUCTURES ARE TO BE ADJUSTED OR RECONSTRUCTED, THE LOWERING AND RAISING OF THE FRAMES AND LIDS WILL NOT BE PAID FOR SEPARATELY BUT WILL BE INCLUDED IN THE COST OF THE CORRESPONDING PAY ITEM.

## CONSTRUCTION PROCEDURES

STAGE 1 (BEFORE PAVEMENT MILLING)

A) REMOVE A MINIMUM OF 12 (300) OF THE PAVEMENT FROM AROUND THE STRUCTURE.
B) REMOVE THE EXISTING FRAME AND LID FROM THE STRUCTURE.
C) COVER THE STRUCTURE OPENING WITH A 36 (900) DIAMETER METAL PLATE.
D) BACKFILL WITH CRUSHED STONE AND A MINIMUM 1½ (40) THICK HMA SURFACE MIX APPROVED BY THE ENGINEER.

STAGE 2 (AFTER PAVEMENT MILLING)

A) REMOVE THE HMA SURFACE MIX AND CRUSHED STONE.
B) INSTALL THE FRAME AND LID; ADJUST THE FRAME TO ITS FINAL SURFACE ELEVATION.
C) THE SURROUNDING SPACE SHALL BE FILLED WITH CLASS PP-1* CONCRETE TO THE ELEVATION OF THE SURFACE OF THE EXISTING BASE COURSE OR THE BINDER COURSE.

*UNLESS OTHERWISE SPECIFIED IN THE PLANS.

THE PROCEDURE EXPLAINED ABOVE SHALL CONFORM TO THE APPLICABLE PORTIONS OF SECTIONS 353, 406, 602, AND 603 OF THE STANDARD SPECIFICATIONS.

## LEGEND

1. SUB-BASE GRANULAR MATERIAL
2. EXISTING PAVEMENT
3. 36 (900) DIAMETER METAL PLATE
4. PROPOSED CRUSHED STONE AND HMA SURFACE MIX
5. EXISTING STRUCTURE
6. FRAME AND LID (SEE NOTES)
7. CLASS PP-1* CONCRETE
8. PROPOSED HMA SURFACE COURSE
9. PROPOSED HMA BINDER COURSE

LOCATION OF STRUCTURES:

THE CONTRACTOR WILL BE REQUIRED TO KEEP A RECORD OF THE LOCATIONS OF THE BURIED STRUCTURES ACCORDING TO THE STATION AND DISTANCE LEFT OR RIGHT OF THE CENTERLINE OF PAVEMENT. UPON COMPLETION OF THE WORK, THE CONTRACTOR WILL DELIVER THE RECORD TO THE ENGINEER.

BASIS OF PAYMENT: THIS WORK WILL BE PAID FOR AT THE CONTRACT UNIT PRICE PER EACH FOR "FRAMES AND LIDS TO BE ADJUSTED, SPECIAL"

NEW FRAMES AND LIDS, WHEN SPECIFIED, WILL BE PAID FOR SEPARATELY.

# DETAILS FOR FRAMES AND LIDS ADJUSTMENT WITH MILLING

ALL DIMENSIONS ARE IN INCHES (MILLIMETERS) UNLESS OTHERWISE SHOWN

| | | | | | | | | | | | |
|---|---|---|---|---|---|---|---|---|---|---|---|
| FILE NAME = c:\pw_work\pwidot\leyse\d0809310\bd88.dgn | USER NAME = leyse | DESIGNED - R. SHAH | REVISED - A. ABBAS 03-21-97 | STATE OF ILLINOIS DEPARTMENT OF TRANSPORTATION | DETAILS FOR FRAMES AND LIDS ADJUSTMENT WITH MILLING | F.A. RTE. | SECTION | COUNTY | TOTAL SHEETS | SHEET NO. |
| | | DRAWN - | REVISED - R. WIEDEMAN 05-14-04 | | | | | | | |
| | PLOT SCALE = 49.9999 ' / IN. | CHECKED - | REVISED - R. BORO 01-01-07 | | | BD600-03 (BD-8) | | CONTRACT NO. | | |
| | PLOT DATE = 3/18/2011 | DATE - 10-25-96 | REVISED - R. BORO 03-09-11 | | SCALE: NONE / SHEET NO. 1 OF 1 SHEETS / STA. TO STA. | FED. ROAD DIST. NO. 1 | ILLINOIS | FED. AID PROJECT | | |

| | | | | | | | | | | | |
|---|---|---|---|---|---|---|---|---|---|---|---|
| FILE NAME = D1353887-SHT-DET-04.DGN | USER NAME = malopez | DESIGNED - | REVISED - | STATE OF ILLINOIS DEPARTMENT OF TRANSPORTATION | VILLAGE OF BURR RIDGE JOLIET RD AT MADISON ST MISCELLANEOUS DETAILS | F.A.U RTE. | SECTION | COUNTY | TOTAL SHEETS | SHEET NO. |
| | | DRAWN - BH | REVISED - | | | 2674 | 06-00034-00-PV | DUPAGE | 69 | 52 |
| | PLOT SCALE = $SCALE$ | CHECKED - DW | REVISED - | | | | BD-32 | CONTRACT NO. 63581 | | |
| | PLOT DATE = 3/31/2011 | DATE - 03-28-2011 | REVISED - | | SCALE: / SHEET NO. OF SHEETS / STA. TO STA. | FED. ROAD DIST. NO. | ILLINOIS | FED. AID PROJECT | | |