F.A.U. RTE.	SECTION	COUNTY	TOTAL SHEETS	SHEET NO.
0085	00-00246-02-FP	MCHENRY	292	177
STA.		TO STA.		
FED. ROAD DIST. NO. 1	ILLINOIS	FED. AID PROJECT		

CONTRACT NO: 63522

TEMPORARY CONTROLLER SEQUENCE

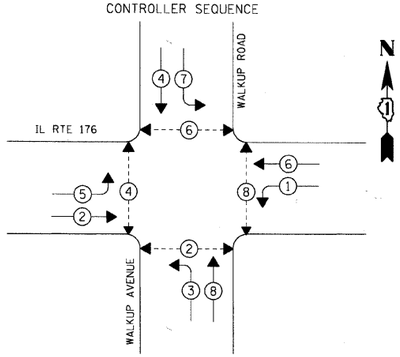

TEMPORARY PHASE DESIGNATION DIAGRAM
PRESTAGE

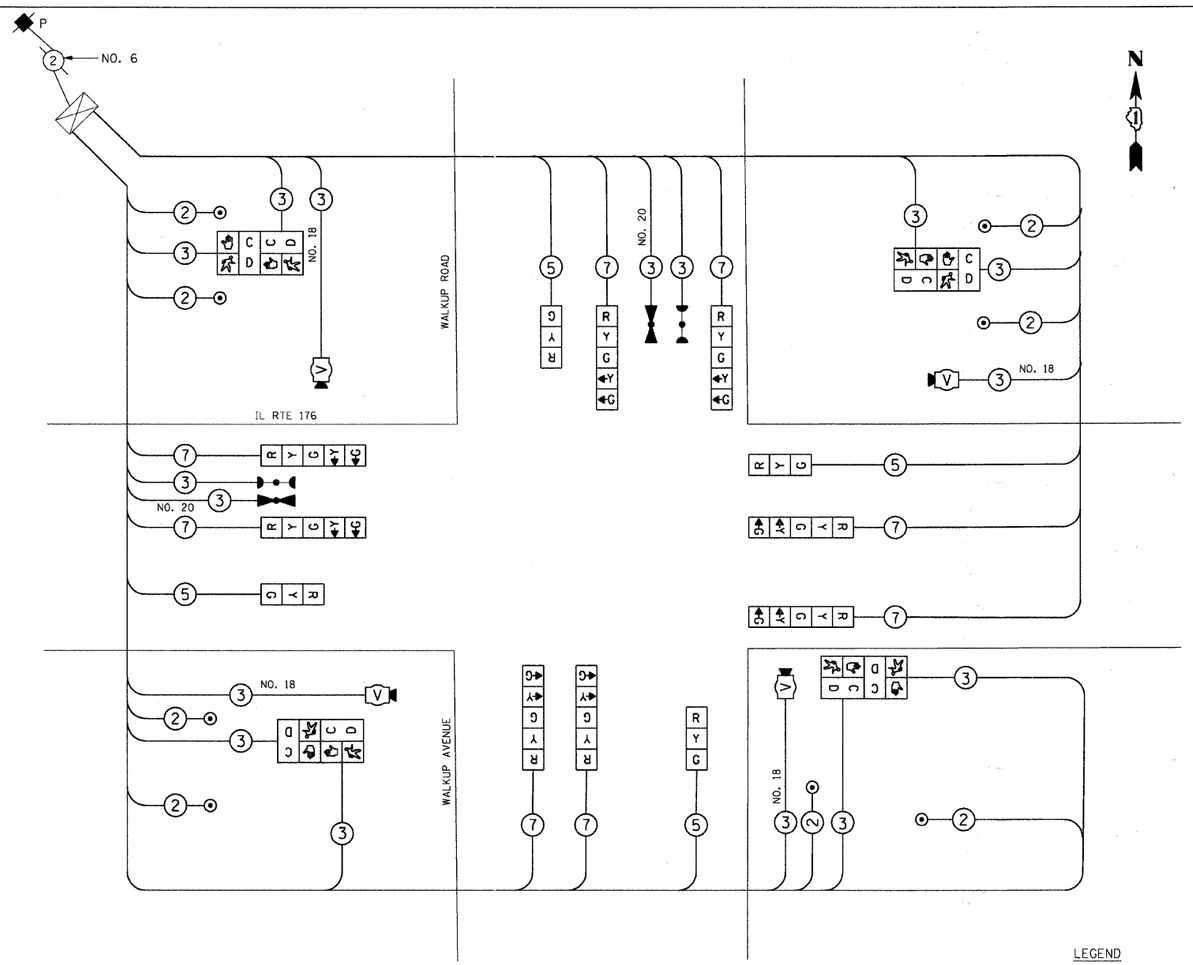

PRESTAGE TEMPORARY SIGNAL CABLE PLAN

TEMPORARY EMERGENCY VEHICLE PREEMPTION SEQUENCE
PRESTAGE

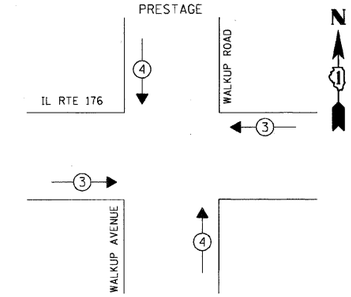

PROPOSED EMERGENCY VEHICLE PREEMPTORS		
EMERGENCY VEHICLE PREEMPTOR	3	4
MOVEMENT	← →	↓ ↑

EMERGENCY VEHICLE PRE-EMPTION EQUIPMENT SHALL BE 3M OPTI-COM TYPE AND SHALL MATCH CRYSTAL LAKE RURAL FIRE PROTECTION DISTRICT EMERGENCY VEHICLE EQUIPMENT

LEGEND

- DUAL ENTRY PHASE
- PEDESTRIAN PHASE
- OL OVERLAP
- * NUMBER REFERS TO ASSOCIATED PHASE

TRAFFIC SIGNAL INSTALLATION ELECTRICAL SERVICE REQUIREMENTS					TOTAL WATTAGE
TYPE	NO. OF LAMPS	X WATTAGE INCAND.	LED	X % OPERATION	
SIGNAL (RED)	12	X	17	0.50	102.0
(YELLOW)	12	X	25	0.25	75.00
(GREEN)	12	X	15	0.25	45.00
ARROW	16	X	12	0.10	19.20
PED. SIGNAL	8	X	25	1.00	200.0
CONTROLLER	1	X	100	1.00	100.0
ILLUM. SIGN	--	X		0.05	
VIDEO SYSTEM		150		1.00	150.0
				TOTAL =	691.2

ENERGY COSTS TO: CITY OF CRYSTAL LAKE
MARK STONIKAS (815) 356-3700, EXT. 4025
100 W. WOODSTOCK STREET
CRYSTAL LAKE, ILLINOIS 60014

ENERGY SUPPLY: CONTACT: LISA COOK
PHONE: 815-477-5204
COMPANY: COM. ED.

RESTORATION OF WORK AREA. RESTORATION OF THE TRAFFIC SIGNAL WORK AREA SHALL BE INCIDENTAL TO THE RELATED PAY ITEM SUCH AS FOUNDATION, CONDUIT, HANDHOLE, TRENCH AND BACKFILL, ETC., AND NO EXTRA COMPENSATION SHALL BE ALLOWED. ALL ROADWAY SURFACES SUCH AS SHOULDERS, MEDIANS, SIDEWALKS, PAVEMENT, ETC. SHALL BE REPLACED IN KIND. ALL DAMAGE TO MOWED LAWNS SHALL BE REPLACED WITH AN APPROVED SOD, AND ALL DAMAGE TO UNMOWED FIELDS SHALL BE SEEDED IN ACCORDANCE WITH STANDARD SPECIFICATIONS 252 AND 250 RESPECTIVELY.

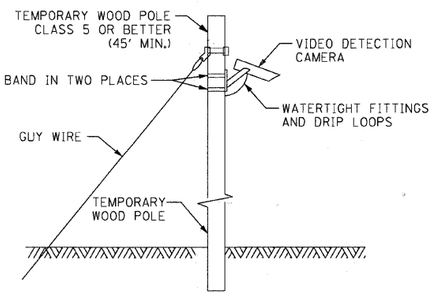

TEMPORARY VIDEO DETECTION MOUNTING DETAIL
(NOT TO SCALE)

REVISIONS	
NAME	DATE

MCHENRY COUNTY DIVISION OF TRANSPORTATION
WALKUP ROAD F.A.U. 0085

PRESTAGE: TEMP CABLE PLAN, PHASE DESIGNATION DIAGRAM, EMERGENCY VEHICLE SEQUENCE

IL ROUTE 176 & WALKUP ROAD

SCALE: N.T.S. DRAWN BY: SNB
DATE: 06/10/11 CHECKED BY: RRM

TENG

TENG & ASSOCIATES, INC.
ENGINEERS•ARCHITECTS•PLANNERS
303 N. MICHIGAN AVE. CHICAGO, IL 60601
TELEPHONE: 312-616-0600

\\FS-0046\AM\VAULT\D-TRANS.07\2202\300-03\CIVIL\CAD\02 CONTRACT\IA TENG\SHEET\TP02A006.SHT STANKRJ
..\B099A00LDCN 6:09:20\ 16:38:41