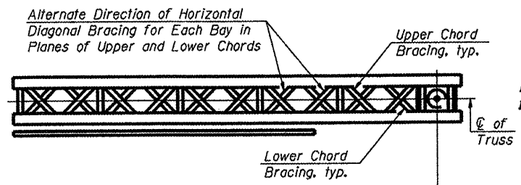

TYPICAL PLAN

(Walkway not shown)

	Structure Number	Station	Design Truss Type	Cantilever Length (L)	Elev. A	Dim. D	D_s	Total Sign Area
167	2C101S25ILO09.6	104+85	II-C-A	28'	98.23	14'	7' 6"	124 sq ft
168	2C101S25IRO09.6	104+85	II-C-A	30'	96.25	15'	7' 6"	75 sq ft

Truss Type	Maximum Sign Area	Maximum Length
I-C-A	170 Sq. Ft.	25 Ft.
II-C-A	340 Sq. Ft.	30 Ft.
III-C-A	400 Sq. Ft.	40 Ft.

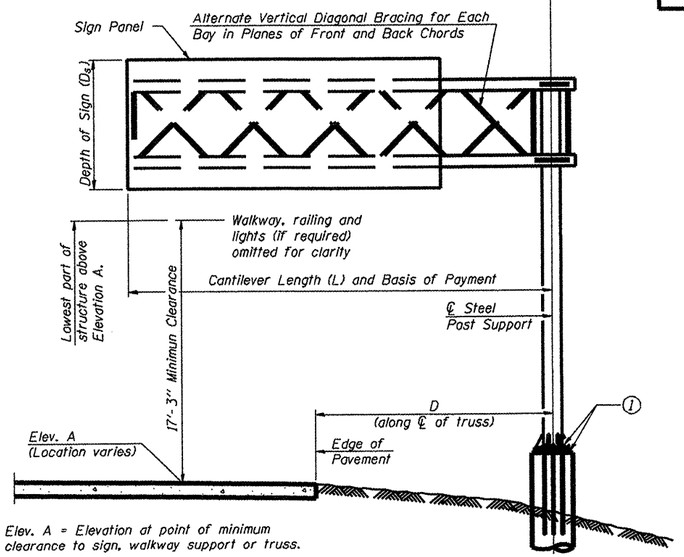

Elev. A = Elevation at point of minimum clearance to sign, walkway support or truss.

TYPICAL ELEVATION

Looking in Direction of Traffic

Sign support structures may be subject to damaging vibrations and oscillations when sign panels are not in place during erection or maintenance of the structure. To avoid these vibrations and oscillations, consideration should be given to attaching temporary blank sign panels to the structure.

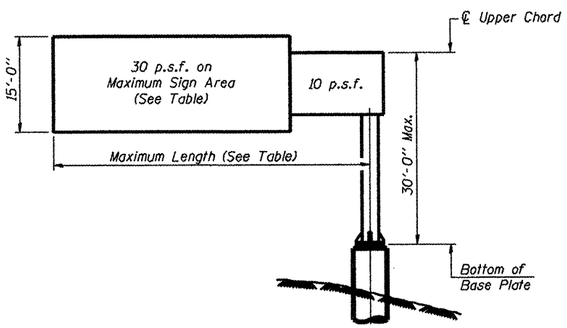

DESIGN WIND LOADING DIAGRAM

Parameters shown are basis for I.D.O.T. Standards Installations not within dimensional limits shown require special analysis for all components.

Note:
Trusses shall be shipped individually with adequate provision to prevent detrimental motion during transport. This may require ropes between horizontals and diagonals or energy dissipating (elastic) ties to the vehicle. The contractor is responsible for maintaining the configuration and protection of the trusses.

(1) After adjustments to level truss and insure adequate vertical clearance, all top and leveling nuts shall be tightened against the base plate with a minimum torque of 200 lb.-ft. Stainless steel mesh shall then be placed around the perimeter of the base plate. Secure to base plate with stainless steel banding.

* If M270 Gr. 50W (M222) steel is proposed, chemistry for plate to be used shall first be approved by the Engineer as suitable for galvanizing and welding.

GENERAL NOTES

DESIGN: AASHTO Standard Specifications for Structural Supports for Highway Signs, Luminaires and Traffic Signals. ("AASHTO Specifications")

CONSTRUCTION: Current (at time of letting) Illinois Department of Transportation Standard Specifications for Road and Bridge Construction, Supplemental Specifications and Special Provisions. ("Standard Specifications")

LOADING: 90 M.P.H. WIND VELOCITY

WALKWAY LOADING: Dead load plus 500 lbs. concentrated live load.

DESIGN STRESSES:
Field Units
f'_c = 3,500 p.s.i.
fy = 60,000 p.s.i. (reinforcement)

WELDING: All welds to be continuous unless otherwise shown. All welding to be done in accordance with current AWS D1.1 and D1.2 Structural Welding Codes (Steel and Aluminum) and the Standard Specificiations.

MATERIALS: Aluminum Alloys as shown throughout plans. All Structural Steel Pipe shall be ASTM A53 Grade B or A500 Grade B or C. If A500 pipe is substituted for A53, then the outside diameter shall be as detailed and wall thickness greater than or equal to A53.
All Structural Steel Plates and Shapes shall conform to AASHTO M270 Gr. 36, Gr. 50 or Gr. 50W*. Stainless steel for shims, sleeves and handhole covers shall be ASTM A240, Type 302 or 304, or another alloy suitable for exterior exposure and acceptable to the Engineer.
The steel pipe and stiffening ribs at the base plate for the column shall have a minimum longitudinal Charpy V-Notch (CVN) energy of 15 lb.-ft. at 40° F. (Zone 2) before galvanizing.

FASTENERS FOR ALUMINUM TRUSSES: All bolts noted as "high strength" must satisfy the requirements of AASHTO M164 (ASTM A325), or approved alternate, and must have matching lock nuts. Threaded studs for splices (if Members Interfere) must satisfy the requirements of ASTM A449, ASTM A193, Grade B7, or approved alternate, and must have matching lock nuts. Bolts and lock nuts not required to be high strength must satisfy the requirements of ASTM A307. All bolts and lock nuts must be hot dip galvanized per AASHTO M232. The lock nuts must have nylon or steel inserts. A stainless steel flat washer conforming to ASTM A240 Type 302 or 304, is required under both head and nut or under both nuts where threaded studs are used. High strength bolt installation shall conform to Article 505.04 (f) (2)d of the IDOT Standard Specifications for Road and Bridge Construction. Rotational capacity ("ROCAP") testing of bolts will not be required.

U-BOLTS AND EYEBOLTS: U-Bolts and Eyebolts must be produced from ASTM A276 Type 304, 304L, 316 or 316L, Condition A, cold finished stainless steel, or an equivalent material acceptable to the Engineer. All nuts for U-Bolts and Eyebolts must be lock nuts equivalent to ASTM A307 with nylon or steel inserts and hot dip galvanized per AASHTO M232. A stainless steel flat washer conforming to ASTM A240, Type 302 or 304, is required under each U-Bolt and Eyebolt lock nut.

GALVANIZING: All Steel Grating, Plates, Shapes and Pipe shall be Hot Dip Galvanized after fabrication in accordance with AASHTO M111. Painting is not permitted.

ANCHOR RODS: Shall conform to ASTM F1554 Gr. 105.

CONCRETE SURFACES: All concrete surfaces above an elevation 6" below the lowest final ground line at each foundation shall be cleaned and coated with Bridge Seat Sealer in accordance with the Standard Specifications.

REINFORCEMENT BARS: Reinforcement Bars designated (E) shall be epoxy coated in accordance with the Standard Specifications.

FOUNDATIONS: The contract unit price for Drilled Shaft Concrete Foundations shall include reinforcement bars complete in place.

TOTAL BILL OF MATERIAL

ITEM	UNIT	TOTAL
OVERHEAD SIGN STRUCTURE CANTILEVER TYPE I-C-A	Foot	
OVERHEAD SIGN STRUCTURE CANTILEVER TYPE II-C-A	Foot	88
OVERHEAD SIGN STRUCTURE CANTILEVER TYPE III-C-A	Foot	
OVERHEAD SIGN STRUCTURE WALKWAY, TYPE A	Foot	37.3
DRILLED SHAFT CONCRETE FOUNDATIONS	Cu. Yds.	15.5

OSC-A-1 1-20-11

FILE NAME = D:\BR\SIGN TRUSS\CADD Plans\2011-2 contract\PLANwng.dgn	USER NAME = linkdj	DESIGNED - ___	REVISED - ___ _____
		DRAWN - ___	REVISED - ___ _____
	PLOT SCALE = 100.0000 ' / IN.	CHECKED - ___	REVISED - ___ _____
	PLOT DATE = Tue Apr 12 07:38:40 2011	DATE - _____	REVISED - ___ _____

STATE OF ILLINOIS
DEPARTMENT OF TRANSPORTATION

CANTILEVER SIGN STRUCTURES - GENERAL PLAN & ELEVATION
ALUMINUM TRUSS & STEEL POST

SCALE: _____ SHEET NO. __ OF ___ SHEETS STA. _____ TO STA. _____

F.A. RTE.	SECTION	COUNTY	TOTAL SHEETS	SHEET NO.
var D-2	OVD SIN STR REPL 12-03	VARIOUS	28	15

CONTRACT NO. 46176

ILLINOIS FED. AID PROJECT