STATE OF ILLINOIS
DEPARTMENT OF TRANSPORTATION

ROUTE NO.	SECTION	COUNTY	TOTAL SHEETS	SHEET NO.
F. A. I. 80/94	*	COOK	90	70
FED. ROAD DIST. NO. 1		ILLINOIS	FED. AID PROJECT-	

SHEET NO. 13
21 SHEETS

* 2004-133F
CONTRACT NO. 62B98

GIRDER 3 MOMENT TABLE

		0.4 Sp.1	Pier 1	0.5 Sp.2	Pier 2	0.5 Sp.3	Pier 3	0.5 Sp.4	Pier 4	0.5 Sp.5	Pier 5	0.6 Sp.6
Is	(10^6 mm^4)	9219	15164	9219	16683	9219	15164	9219	15164	9219	16683	9219
Ic (n)	(10^6 mm^4)	22451	-	22451	-	22451	-	22451	-	22451	-	22451
Ic (3n)	(10^6 mm^4)	16004	-	16004	-	16004	-	16004	-	16004	-	16004
Ss	(10^3 mm^3)	18909	27078	18909	29527	18909	27078	18909	27078	18909	27078	18909
Sc (n)	(10^3 mm^3)	25540	-	25540	-	25540	-	25540	-	25540	-	25540
Sc (3n)	(10^3 mm^3)	23222	-	23222	-	23222	-	23222	-	23222	-	23222
Sb_f	(10^3 mm^3)	1344	1920	1344	2112	1344	1920	1344	1920	1344	1920	1344
DL	(kN/m)	16.84	27.68	16.84	27.68	16.84	27.68	16.84	27.68	16.84	27.68	16.84
MDL	(kN·m)	859	2913	1102	3665	1096	2902	816	2525	857	2838	1104
s DL	(kN/m)	9.15	-	9.15	-	9.15	-	9.15	-	9.15	-	9.15
Ms DL	(kN·m)	453	-	574	-	571	-	430	-	449	-	581
ML	(kN·m)	1253	1157	1231	1658	1234	1161	1247	1066	1245	1098	1372
M (Imp)	(kN·m)	313	231	308	332	308	232	312	213	311	220	343
$\frac{5}{3}$[ML +M (Imp)]	(kN·m)	2611	2315	2564	3317	2570	2322	2598	2133	2594	2195	2859
Ma	(kN·m)	5099	6797	5512	9076	5509	6791	4997	6054	5070	6543	5907
Mb_f	(kN·m)	28	50	41	67	41	50	30	36	30	41	37
fs DL(non-comp)	(MPa)	45	108	58	124	58	107	43	93	45	105	58
fs DL(comp)	(MPa)	19	-	25	-	25	-	19	-	19	-	25
fs$\frac{5}{3}$[ML + M (Imp)]	(MPa)	102	85	100	112	101	86	102	79	102	81	112
f_f	(MPa)	21	26	30	32	30	26	22	19	22	21	28
fs (Overload)	(MPa)	166	193	183	236	184	193	164	172	166	186	195
fs (Total)	(MPa)	216	251	238	307	239	251	213	224	216	242	254
Fcr (Overload)	(MPa)	328	278	328	278	328	278	328	290	328	287	328
VR	(kN)	328	-	285	-	291	-	275	-	275	-	327
Fcr	(MPa)	338	312	335	312	335	312	337	318	337	316	336

GIRDER 3 REACTION TABLE

		W. Abut.	Pier 1	Pier 2*	Pier 3	Pier 4	Pier 5	E. Abut.
RDL	(kN)	261	977	567	965	895	967	298
RL	(kN)	223	362	246	364	349	359	225
Imp.	(kN)	67	91	74	91	87	90	68
R (Total)	(kN)	551	1430	887	1420	1331	1416	591

* Shear Force at Connection Location between Box Beam and Girders. The larger Shear Force at either side of Box Beam is shown.

GIRDER 5 MOMENT TABLE

		0.4 Sp.1	Pier 1	0.5 Sp.2	Pier 2	0.5 Sp.3	Pier 3	0.5 Sp.4	Pier 4	0.5 Sp.5	Pier 5	0.6 Sp.6
Is	(10^6 mm^4)	9219	15164	9219	16683	9219	15164	9219	15164	9219	16683	9219
Ic (n)	(10^6 mm^4)	22451	-	22451	-	22451	-	22451	-	22451	-	22451
Ic (3n)	(10^6 mm^4)	16004	-	16004	-	16004	-	16004	-	16004	-	16004
Ss	(10^3 mm^3)	18909	27078	18909	29527	18909	27078	18909	27078	18909	27078	18909
Sc (n)	(10^3 mm^3)	25540	-	25540	-	25540	-	25540	-	25540	-	25540
Sc (3n)	(10^3 mm^3)	23222	-	23222	-	23222	-	23222	-	23222	-	23222
Sb_f	(10^3 mm^3)	1344	1920	1344	2112	1344	1920	1344	1920	1344	1920	1344
DL	(kN/m)	16.84	27.68	16.84	27.68	16.84	27.68	16.84	27.68	16.84	27.68	16.84
MDL	(kN·m)	858	2913	1090	3395	1074	2980	807	2563	858	2642	1112
s DL	(kN/m)	9.15	-	9.15	-	9.15	-	9.15	-	9.15	-	9.15
Ms DL	(kN·m)	447	-	562	-	554	-	419	-	444	-	577
ML	(kN·m)	1378	1210	1335	1634	1368	1207	1366	1110	1344	1127	1509
M (Imp)	(kN·m)	316	242	306	327	314	241	313	222	308	225	346
$\frac{5}{3}$[ML +M (Imp)]	(kN·m)	2824	2420	2735	3268	2802	2413	2799	2219	2754	2253	3092
Ma	(kN·m)	5367	6932	5703	8662	5760	7012	5233	6217	5271	6364	6215
Mb_f	(kN·m)	30	52	42	65	43	52	31	37	32	40	39
fs DL(non-comp)	(MPa)	45	108	58	115	57	110	43	95	45	98	59
fs DL(comp)	(MPa)	19	-	24	-	24	-	18	-	19	-	25
fs$\frac{5}{3}$[ML + M (Imp)]	(MPa)	111	89	107	111	110	89	110	82	108	83	121
f_f	(MPa)	22	27	32	31	32	27	23	19	24	21	29
fs (Overload)	(MPa)	175	197	189	226	191	199	171	177	172	181	205
fs (Total)	(MPa)	228	256	246	294	248	259	222	230	224	235	267
Fcr (Overload)	(MPa)	328	277	328	277	328	277	328	290	328	287	328
VR	(kN)	352	-	304	-	309	-	296	-	293	-	350
Fcr	(MPa)	337	311	334	311	334	311	337	318	337	316	335

GIRDER 5 REACTION TABLE

		W. Abut.	Pier 1	Pier 2*	Pier 3	Pier 4	Pier 5	E. Abut.
RDL	(kN)	260	979	521	982	914	951	299
RL	(kN)	244	367	267	368	352	362	247
Imp.	(kN)	67	92	73	92	88	91	68
R (Total)	(kN)	571	1438	861	1442	1354	1404	614

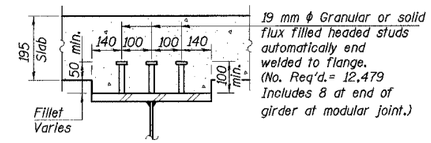

SECTION A-A
"NOT IN CONTRACT"

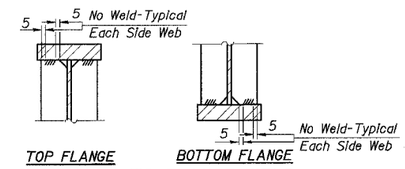

STIFFENER TO FLANGE WELD
Typical for Bearing Stiffeners

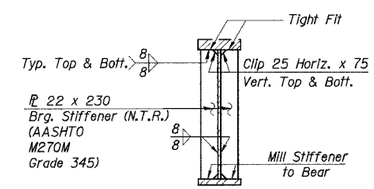

BEARING STIFFENERS
(At Abutments & Piers except Pier 2)

Fcr - Critical average flange stress (smaller of Fcr1 or Fcr2 for partially braced flanges and Fy for continuously braced flanges) computed according to the 2003 AASHTO Guide Specifications for Horizontally Curved Steel Girder Highway Bridges (Sections 5.2, 5.3 and 5.4).

Fcr (Overload) - Critical average flange stress at overload computed according to the 2003 AASHTO Guide Specifications for Horizontally Curved Steel Girder Highway Bridges Section 9.5.

Is and Ss are the moment of inertia and section modulus of the steel section used in computing fs (Total and Overload).

Ic(n) and Sc(n) are the moment of inertia and section modulus of the composite section used in computing stresses due to live load.

Ic(3n) and Sc(3n) are the moment of inertia and section modulus of the composite section used in computing stresses due to superimposed dead load (see AASHTO 10.38).

VR is the maximum L+ impact shear range in span.

Sb_f is the section modulus for one flange plate for lateral bending.

MDL - Moment due to dead loads on non-composite section.

MsDL - Moment due to dead loads on composite section.

ML - Moment due to live load on non-composite or composite section.

M (Imp) - Moment due to live load impact on non-composite or composite section

Mb_f is the lateral bending moment for flange plate (factored).

Ma (Applied Moment) = 1.3 [MDL + MsDL + 5/3 (ML + M (Imp))]

fs (Overload) is the sum of stresses due to MDL + MsDL + 5/3 (ML + M (Imp))

fs (Total) is the sum of stresses due to 1.3 [MDL + MsDL + 5/3 (ML + M (Imp))]

f_f is the calculated normal stress at the edge of flange due to lateral bending (factored).

ML and RL include the effects of centrifugal force and superelevation.

Notes:

1. All Field Splice Plates, except Fill ℄ shall be AASHTO M270M Grade 345 and shall meet NTR.
2. NTR denotes notch toughness requirements are applicable.
3. All dimensions are in millimeters (mm) unless otherwise noted.

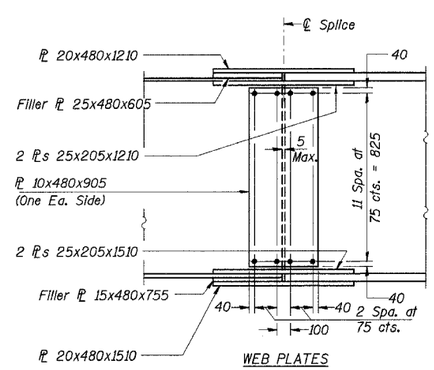

WEB PLATES

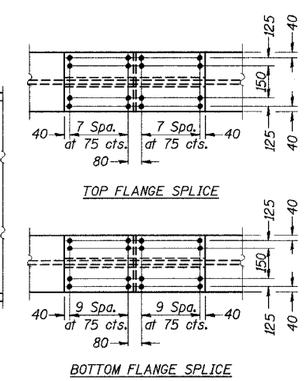

FIELD SPLICE 1, 2, 3 & 4
(Splice 2, 3, 4 shown. Splice 1 opposite hand)

DESIGNED	JY
CHECKED	MIL
DRAWN	LK
CHECKED	JY

ILLINOIS DEPARTMENT OF TRANSPORTATION
I-94 EAST BOUND / IL 394 SOUTH BOUND
MISCELLANEOUS STRUCTURAL STEEL DETAILS
EB I-94 OVER THORN CREEK
F.A.I. 94 SECTION 2004-133F
COOK COUNTY
STA. 20+509.000 STRUCTURE NO. 016-2807
DATE 05/16/05
SCALE ---
HNTB

jkelsie
E:\34562\CADD\bi\SN_2807\cds\CTR_29_2807\st190014a_2807.dgn
20-MAY-2005 14:31