•REF-
•REF-
•REF-

F.A.U. RTE.	SECTION	COUNTY	TOTAL SHEETS	SHEET NO.
3578	1314 RS-3	COOK	23	6
STA. _____		TO STA._____		
FED. ROAD DIST. NO. 1	ILLINOIS	FED. AID PROJECT		

CONTRACT 62673

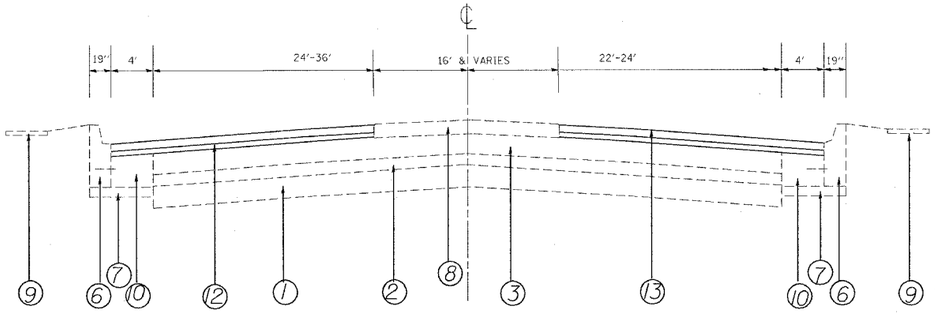

NOTE: B-6.12 CURB & GUTTER ENDS AT STA 83+46
B-6.24 CURB & GUTTER BEGINS AT STA 83+46

PROPOSED TYPICAL CROSS-SECTION
SOUTHWEST HWY

STA 22+50 TO STA 83+40

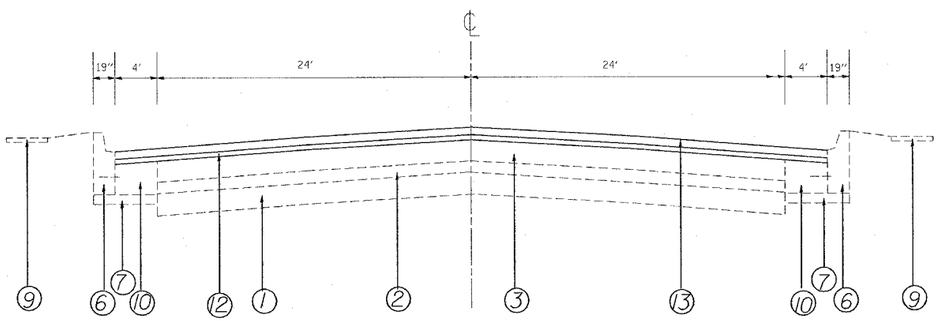

PROPOSED TYPICAL CROSS-SECTION
SOUTHWEST HWY

STA 83+40 TO STA 84+08

LEGEND

1. EXISTING PCC PAVEMENT (9"-7")
2. EXISTING BITUMINOUS RESURFACING ← 3"
3. EXISTING BITUMINOUS AGGREGATE MIXTURE (6" OVERLAY)
4. EXISTING BITUMINOUS CONCRETE BINDER COURSE (1½")
5. EXISTING BITUMINOUS CONCRETE SURFACE COURSE CLASS I (1½")
6. EXISTING COMBINATION CURB AND GUTTER TYPE B-6.24
7. EXISTING SUB-BASE GRANULAR MATERIAL, TYPE A (6")
8. EXISTING CORRUGATED MEDIAN
9. EXISTING PCC SIDEWALK
10. EXISTING PCC BASE COURSE WIDENING (9")
11. PROPOSED BITUMINOUS SURFACE REMOVAL, (2½")
12. PROPOSED POLYMERIZED LEVELING BINDER (MACHINE METHOD) SUPERPAVE, IL-4.75, N50 (3/4")
13. PROPOSED POLYMERIZED BIT. CONCRETE SURFACE COURSE, SUPERPAVE, MIX "F", N90 (1¾")

REVISIONS NAME	DATE

ILLINOIS DEPARTMENT OF TRANSPORTATION

TYPICAL SECTIONS

SCALE: VERT. NTS
HORIZ.
DATE 3/28/2005

DRAWN BY
CHECKED BY

3/28/2005
c:$projects$p103604$p103604aa.m32
wilgreendp

03/28/2005 11:17:23