STATE OF ILLINOIS
DEPARTMENT OF TRANSPORTATION

ROUTE NO.	SECTION	COUNTY	TOTAL SHEETS	SHEET NO.
94/90	*	COOK	556	290
FED. ROAD DIST. NO. 1	ILLINOIS	FED. AID PROJECT-		

62300 *(1818, ETC, 2324.6-1P)R-8

TRUSS UNIT TABLE

Structure Number	Station	Design Truss Type	Exterior Units (2)			Interior Unit				Upper & Lower Chord		Verticals; Horizontals; Vertical, Horizontal, and Interior Diagonals		Camber at Midspan	Splicing Flange					
			No. Panels per Unit	Unit Lgth.(L_e)	Panel Lgth.(P)	No. Req'd.	No. Panels per Unit	Unit Lgth.(L_i)	Panel Lgth.(P)	O.D.	Wall	O.D.	Wall		Bolts No./Splice	Bolts Dia.	Weld Sizes W	Weld Sizes W_1	A	B
1S016I094R055.41	4598+65	III-A	7	35'-8½"	4'-10"	-	-	-	-	7"	5/16"	3¼"	5/16"	1.73"	6	1"	7/16"	5/16"	11½"	15"
1S016I094L058.4	2442+20	I-A	7	36'-10½"	5'-0"	-	-	-	-	5"	5/16"	2¼"	5/16"	1.75"	6	7/8"	5/16"	¼"	8¾"	11¾"

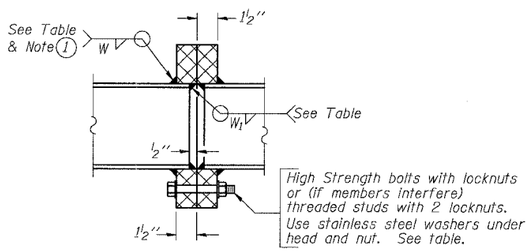

SECTION B-B

(1) Splicing Flanges shall be attached to each truss unit with the truss shop assembled to camber shown. Truss units shall be in proper alignment and flange surfaces shall be shop bolted into full contact before welding. Sufficient external welds or tacks shall be made to secure flanges until remaining welds are made after disassembly. Adjacent flanges shall be "match marked" to insure proper field assembly.

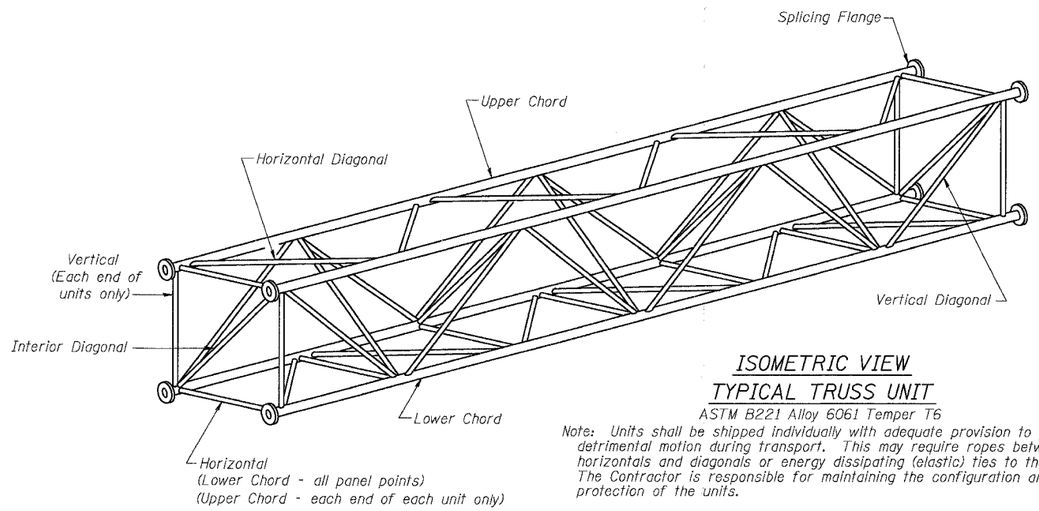

ISOMETRIC VIEW
TYPICAL TRUSS UNIT
ASTM B221 Alloy 6061 Temper T6

Note: Units shall be shipped individually with adequate provision to prevent detrimental motion during transport. This may require ropes between horizontals and diagonals or energy dissipating (elastic) ties to the vehicle. The Contractor is responsible for maintaining the configuration and protection of the units.

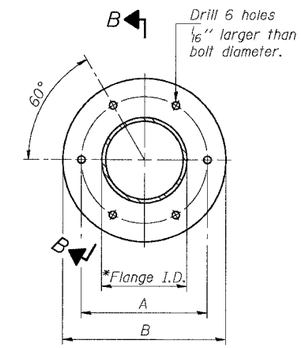

TRUSS TYPES I-A, II-A, & III-A

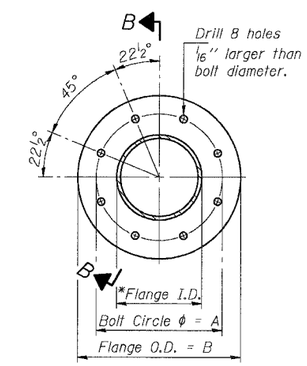

TRUSS TYPES II-A & III-A

SPLICING FLANGES
ASTM B221, Alloy 6061-T6
or ASTM B209, Alloy 6061-T651
*To fit O.D. of Chord with maximum gap of 1/16".

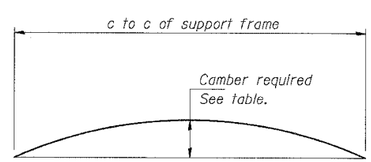

CAMBER DIAGRAM
Camber curve shown is theoretical. Actual camber attained by slope changes at splices between units.

CAMBER ATTAINMENT EXAMPLES:

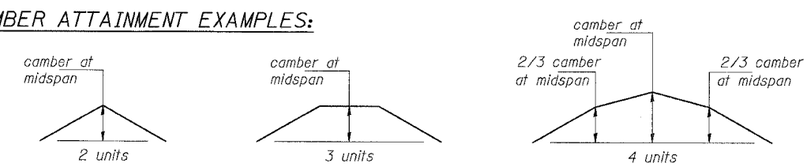

Camber shown is for fabrication only, measured with truss fully supported. (No-load condition)

NUMBER	REVISION	DATE

DESIGNED	MSA
CHECKED	AS
DRAWN	MD
CHECKED	MSA

EXAMINED _____ 20
ENGINEER OF STRUCTURAL SERVICES
PASSED _____
ENGINEER OF BRIDGES AND STRUCTURES

OS4-A-2 11/1/2002

SGN-12

OVERHEAD SIGN STRUCTURES
ALUMINUM TRUSS DETAILS
FOR TRUSS TYPES I-A, II-A and III-A

ILLINOIS DEPARTMENT OF TRANSPORTATION
F.A.I. 94/90 (DAN RYAN EXPRESSWAY)
31ST STREET TO 71ST STREET
NB EXPRESS LANE RECONSTRUCTION
OVERHEAD SIGN STRUCTURES