08-04-2023 LETTING ITEM 008

F.A.U. RTE.	SECTION	COUNTY	TOTAL SHEETS	SHEET NO.
338	21-00067-00-BR	COOK	90	1

CONTRACT NO. 61J67

FOR INDEX OF SHEETS, SEE SHEET NO. 2

STATE OF ILLINOIS
DEPARTMENT OF TRANSPORTATION

PLANS FOR PROPOSED FEDERAL AID HIGHWAY

IL 59 PEDESTRIAN OVERPASS
EXISTING MULTI-USE PATH TO MADISON DRIVE

SECTION NO.: 21-00067-00-BR
PROJECT NO.: GZVA(457)
VILLAGE OF STREAMWOOD
COOK COUNTY

DESIGN DATA

IL 59
POSTED SPEED LIMIT = 45 MPH (EXISTING)
DESIGN SPEED LIMIT = 50 MPH (EXISTING)
ADT =34,200 (2021)
DESIGN DESIGNATION: PRINCIPAL ARTERIAL

MADISON DRIVE
POSTED SPEED LIMIT = 25 MPH (EXISTING)
DESIGN SPEED LIMIT = 30 MPH (EXISTING)
DESIGN DESIGNATION: LOCAL

LICENSED STRUCTURAL ENGINEER WILLIAM J. COLLETTI 081-003659 STATE OF ILLINOIS

WILLIAM J. COLLETTI, P.E., S.E.
NO. 081-003659
EXP. DATE 11/30/2024
SHEET RANGE 50 - 76

WILLIAM B. LANCASTER 062-059322 REGISTERED PROFESSIONAL ENGINEER OF ILLINOIS

WILLIAM B. LANCASTER, P.E.
NO. 062-059322
EXP. DATE 11/30/23
SHEET RANGE 1 - 28, 79 - 90

GAURAV RAI 062-065565 LICENSED PROFESSIONAL ENGINEER OF STATE OF ILLINOIS

GAURAV RAI, P.E., P.T.O.E.
NO. 062-065565
EXP. DATE 11/30/2023
SHEET RANGE 40 - 49

STRUCTURE NUMBER 016-8309
ILLINOIS ROUTE 59 AND
POPLAR CREEK

IMPROVEMENT ENDS
IL 59 PEDESTRIAN
OVERPASS BIKE PATH
STATION 122+66.71

IMPROVEMENT BEGINS
IL 59 PEDESTRIAN
OVERPASS BIKE PATH
STATION 99+94.36

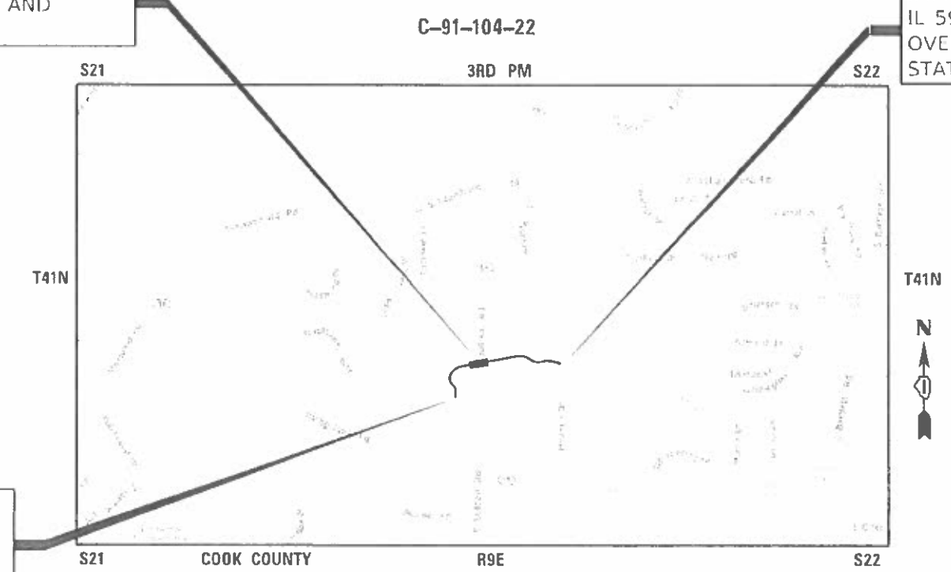

HANOVER TOWNSHIP-SECTION 21 AND 22

LOCATION MAP
NOT TO SCALE

GROSS AND NET LENGTH OF PROJECT
2,272.35 FEET = 0.4 MILES

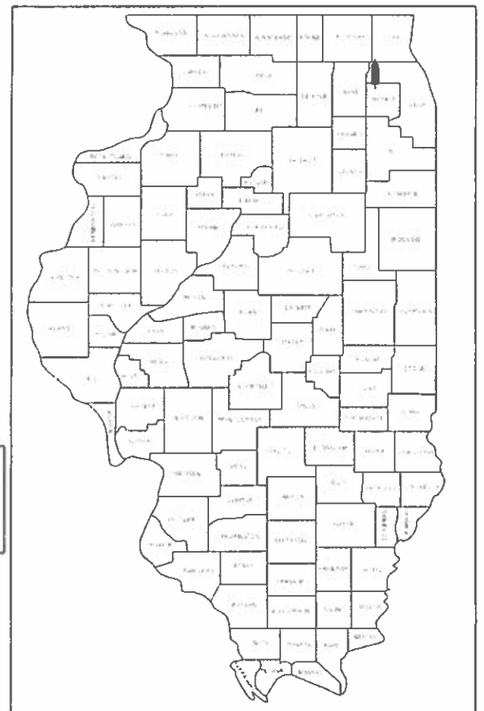

LOCATION OF SECTION INDICATED THUS:-

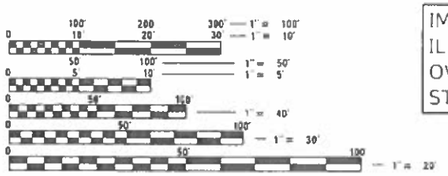

FULL SIZE PLANS HAVE BEEN PREPARED USING STANDARD ENGINEERING SCALES. REDUCED SIZED PLANS WILL NOT CONFORM TO STANDARD SCALES. IN MAKING MEASUREMENTS ON REDUCED PLANS, THE ABOVE SCALES MAY BE USED.

J.U.L.I.E.
JOINT UTILITY LOCATION INFORMATION FOR EXCAVATION
1-800-892-0123
OR 811

STATE OF ILLINOIS
DEPARTMENT OF TRANSPORTATION
DIVISION OF HIGHWAYS

APPROVED ON: MAY 24TH, 2023
VILLAGE OF STREAMWOOD, VILLAGE ENGINEER

PASSED June 1, 2023
DISTRICT 1 ENGINEER OF LOCAL ROADS & STREETS

RELEASING FOR BID BASED ON LIMITED REVIEW June 1, 2023
REGIONAL ENGINEER

PRINTED BY THE AUTHORITY OF THE STATE OF ILLINOIS

FEDERAL AID PROGRAM ENGINEER: CARMEN RAMOS P.E., SCHAUMBURG, IL

CONTRACT NO. 61J67

TRANSYSTEMS

INDEX OF SHEETS

IDOT HIGHWAY STANDARDS

000001-08	STANDARD SYMBOLS, ABBREVIATIONS AND PATTERNS
001001-02	AREAS OF REINFORCEMENT BARS
001006	DECIMAL OF AN INCH AND OF A FOOT
280001-07	TEMPORARY EROSION CONTROL SYSTEMS
515001-04	NAME PLATE FOR BRIDGES
701001-02	OFF-RD OPERATIONS, 2L, 2W, MORE THAN 15' (4.5 m) AWAY
701006-05	OFF-RD OPERATIONS, 2L, 2W, 15' (4.5 m) TO 24" (600 mm) FROM PAVEMENT EDGE
701101-05	OFF-RD OPERATIONS, MULTILANE, 15' (4.5 m) TO 24" (600 mm) FROM PAVEMENT EDGE
701106-02	OFF-RD OPERATIONS, MULTILANE, MORE THAN 15' (4.5 m) AWAY
701301-04	LANE CLOSURE, 2L, 2W, SHORT TIME OPERATIONS
701311-03	LANE CLOSURE, 2L, 2W MOVING OPERATIONS-DAY ONLY
701426-09	LANE CLOSURE, MULTILANE, INTERMITTENT OR MOVING OPER., FOR SPEEDS >= 45 MPH
701501-06	URBAN LANE CLOSURE, 2L, 2W, UNDIVIDED
701606-10	URBAN SINGLE LANE CLOSURE, MULTILANE, 2W WITH MOUNTABLE MEDIAN
701801-06	SIDEWALK, CORNER OR CROSSWALK CLOSURE
701901-08	TRAFFIC CONTROL DEVICES
720001-01	SIGN PANEL MOUNTING DETAILS
720006-04	SIGN PANEL ERECTION DETAILS
720011-01	METAL POSTS FOR SIGNS, MARKERS & DELINEATORS
728001-01	TELESCOPING STEEL SIGN SUPPORT
729001-01	APPLICATIONS OF TYPES A & B METAL POSTS (FOR SIGNS & MARKERS)
805001-01	ELECTRICAL SERVICE INSTALLATION DETAILS
825021-04	LIGHTING CONTROLLER BASE MOUNTED, 240V

GENERAL NOTES

1. ALL REFERENCES TO "STANDARD SPECIFICATIONS" IN THESE GENERAL NOTES SHALL BE INTERPRETED TO MEAN "STANDARD SPECIFICATIONS FOR ROAD AND BRIDGE CONSTRUCTION" ADOPTED BY THE ILLINOIS DEPARTMENT OF TRANSPORTATION, JANUARY 1, 2022. ALL WORK SHALL BE COMPLETED IN ACCORDANCE WITH THESE STANDARD SPECIFICATIONS.

2. PRIOR TO COMMENCEMENT OF CONSTRUCTION, THE CONTRACTOR SHALL VERIFY ALL DIMENSIONS AND CONDITIONS AFFECTING THEIR WORK WITH THE ACTUAL CONDITIONS AT THE JOB SITE. THE ENGINEER SHALL VERIFY THE CONTRACTOR'S LINE AND GRADE STAKES. IF THERE ARE DISCREPANCIES FROM WHAT IS SHOWN ON THE CONSTRUCTION PLANS, THE CONTRACTOR MUST IMMEDIATELY REPORT SAME TO THE ENGINEER BEFORE DOING ANY WORK, OTHERWISE THE CONTRACTOR ASSUMES FULL RESPONSIBILITY. IN THE EVENT OF DISAGREEMENT BETWEEN THE CONSTRUCTION PLANS, STANDARD SPECIFICATIONS AND/OR SPECIAL DETAILS, THE CONTRACTOR SHALL SECURE WRITTEN INSTRUCTIONS FROM THE ENGINEER PRIOR TO PROCEEDING WITH ANY PART OF THE WORK AFFECTED BY OMISSIONS OR DISCREPANCIES. FAILING TO SECURE SUCH INSTRUCTIONS, THE CONTRACTOR WILL BE CONSIDERED TO HAVE PROCEEDED AT THEIR OWN RISK AND IN THE EVENT OF ANY DOUBT OR QUESTION ARISING WITH RESPECT TO THE TRUE MEANING OF THE CONSTRUCTION PLANS OR SPECIFICATIONS, THE DECISION OF THE ENGINEER SHALL BE FINAL AND CONCLUSIVE.

3. IT IS THE CONTRACTOR'S RESPONSIBILITY TO ASCERTAIN EXISTING FIELD CONDITIONS PRIOR TO BIDDING ON THE PROJECT.

4. BEFORE STARTING ANY EXCAVATION, THE CONTRACTOR SHALL CALL "JULIE" (JOINT UTILITY LOCATION INFORMATION FOR EXCAVATION) AT 8-1-1 AND THE VILLAGE OF STREAMWOOD AT 630-736-3850 FOR FIELD LOCATIONS OF BURIED UTILITIES (48 HOURS NOTIFICATION IS REQUIRED).

5. THE CONTRACTOR WILL NOT BE ALLOWED TO SET UP A YARD OR FIELD OFFICE ON STATE OR VILLAGE PROPERTY WITHOUT WRITTEN PERMISSION FROM THE ENGINEER.

6. THE CONTRACTOR SHALL PROTECT AND CAREFULLY PRESERVE ALL SECTION OR SUBSECTION MONUMENTS, PROPERTY CORNERS, AND REFERENCE MARKERS UNTIL THE OWNER, THEIR AGENT, OR AN AUTHORIZED SURVEYOR HAS WITNESSED OR OTHERWISE REFERENCED THEIR LOCATIONS.

7. OFFSET LOCATIONS GIVEN IN THE PLANS FOR STRUCTURES, EDGE OF PAVEMENT, ETC. ARE FROM THE BIKE PATH CENTERLINE.

8. WHEN REMOVING CURB AND GUTTER, AND/OR ANY OTHER STRUCTURES, THE USE OF ANY TYPE OF CONCRETE BREAKERS WHICH MIGHT DAMAGE THE UNDERGROUND PUBLIC OR PRIVATE UTILITIES WILL NOT BE PERMITTED. UNDER NO CIRCUMSTANCES WILL THE USE OF A FROST BALL BE PERMITTED.

9. THE CONTRACTOR SHALL CONTACT KALPANA KANNAN-HOSADURGA, THE DISTRICT ONE TRAFFIC CONTROL SUPERVISOR, AT KALPANA.KANNAN-HOSADURGA@ILLINOIS.GOV A MINIMUM OF 72 HOURS IN ADVANCE OF BEGINNING WORK.

UTILITIES NOTES

1. THE CONTRACTOR SHALL BE RESPONSIBLE FOR CONTACTING THE OWNERS OF ALL UTILITIES PRIOR TO CONSTRUCTION TO DETERMINE THE LOCATION OF ALL UTILITY EQUIPMENT. THE CONTRACTOR SHALL COOPERATE WITH ALL UTILITY OWNERS IN ACCORDANCE WITH THE STANDARD SPECIFICATIONS IF UTILITY RELOCATION, ADJUSTMENT, OR PROTECTION IS NECESSARY.

2. THE LOCATION OF EXISTING UNDERGROUND DRAINAGE STRUCTURES, STORM SEWERS, WATER MAINS, SANITARY SEWERS, AND OTHER PUBLIC UTILITIES AS SHOWN ON THE PLANS IS APPROXIMATE AND THEIR EXACT LOCATION IS TO BE DETERMINED IN THE FIELD BY THE CONTRACTOR.

3. THE CONTRACTOR SHALL BE RESPONSIBLE FOR THE PROTECTION OF ALL UNDERGROUND AND SURFACE UTILITIES EVEN THOUGH THEY MIGHT NOT BE SHOWN ON THE PLANS. ALL UTILITY PROPERTY DAMAGED DURING CONSTRUCTION SHALL BE REPAIRED OR REPLACED TO THE SATISFACTION OF THE ENGINEER IN ACCORDANCE WITH ARTICLES 105.07 AND 107.20.

4. ALL UTILITY COMPANIES SHALL BE NOTIFIED AT LEAST 3 DAYS PRIOR TO THE START OF CONSTRUCTION.

5. THE CONTRACTOR SHALL USE NECESSARY PRECAUTIONS AND PROTECTION MEASURES REQUIRED TO MAINTAIN EXISTING UTILITIES, SEWERS, AND APPURTENANCES THAT MUST BE KEPT IN OPERATION.

6. THE CONTRACTOR SHALL ENSURE THAT ALL WATER SYSTEM VALVES, VALVE VAULTS, FIRE HYDRANTS AND SANITARY SEWER MANHOLES REMAIN READILY ACCESSIBLE TO THE VILLAGE FOR EMERGENCY OPERATIONS. THE LOCATIONS OF ALL WATER AND SANITARY FACILITIES SHALL BE MARKED AND READILY VISIBLE AT ALL TIMES.

7. ALL LOOSE MATERIAL DEPOSITED IN THE FLOWLINE OF DRAINAGE STRUCTURES, WHICH OBSTRUCTS THE NATURAL FLOW OF WATER SHALL BE REMOVED AT THE CLOSE OF EACH WORKING DAY. PRIOR TO ACCEPTANCE OF THE IMPROVEMENT, ALL DRAINAGE STRUCTURES SHALL BE FREE OF DIRT AND DEBRIS.

TRAFFIC CONTROL

1. SEE TRAFFIC CONTROL HIGHWAY STANDARDS CONCERNING TRAFFIC CONTROL AND PROTECTION.

COMMITMENTS

TREES THREE INCHES OR GREATER IN DIAMETER AT BREAST HEIGHT SHALL NOT BE CLEARED BETWEEN APRIL 1 THROUGH OCTOBER 31.

	CODE NUMBER	PAY ITEM	UNIT	TOTAL QUANTITY	ITEP / TAP-L			STP
					80% FED /20% LOCAL	80% FED / 20% LOCAL	80% FED /20% LOCAL	80% FED / 20% LOCAL
					MULTI-USE PATH	BRIDGE	TRAINEES	MULTI-USE PATH
					0028	0028	0042	0028
					URBAN	URBAN	URBAN	URBAN
#	20100110	TREE REMOVAL (6 TO 15 UNITS DIAMETER)	UNIT	977				977
#	20100210	TREE REMOVAL (OVER 15 UNITS DIAMETER)	UNIT	743	743			
	20101000	TEMPORARY FENCE	FOOT	314	314			
	20101100	TREE TRUNK PROTECTION	EACH	4	4			
	20200100	EARTH EXCAVATION	CU YD	470	470			
	20201200	REMOVAL AND DISPOSAL OF UNSUITABLE MATERIAL	CU YD	15	15			
	20400800	FURNISHED EXCAVATION	CU YD	240	240			
	21101505	TOPSOIL EXCAVATION AND PLACEMENT	CU YD	10	10			
#	25000115	SEEDING, CLASS 1B	ACRE	0.1				0.1
#	25200200	SUPPLEMENTAL WATERING	UNIT	25.0	25.0			
	28000250	TEMPORARY EROSION CONTROL SEEDING	POUND	325	325			
	28000305	TEMPORARY DITCH CHECKS	FOOT	12	12			
	28000315	AGGREGATE DITCH CHECKS	TON	6	6			
	28000400	PERIMETER EROSION BARRIER	FOOT	9,552	9,552			
	28000510	INLET FILTERS	EACH	4				4
	35101600	AGGREGATE BASE COURSE, TYPE B 4"	SQ YD	19	19			
	35101800	AGGREGATE BASE COURSE, TYPE B 6"	SQ YD	349	349			
	40600275	BITUMINOUS MATERIALS (PRIME COAT)	POUND	784	784			

SPECIALTY ITEM

CODE NUMBER	PAY ITEM	UNIT	TOTAL QUANTITY	ITEP / TAP-L			STP
				80% FED /20% LOCAL	80% FED / 20% LOCAL	80% FED /20% LOCAL	80% FED / 20% LOCAL
				MULTI-USE PATH	BRIDGE	TRAINEES	MULTI-USE PATH
				0028	0028	0042	0028
				URBAN	URBAN	URBAN	URBAN
40604060	HOT-MIX ASPHALT SURFACE COURSE, IL-9.5, MIX "D", N50	TON	86	86			
42001300	PROTECTIVE COAT	SQ YD	4	4			
42400200	PORTLAND CEMENT CONCRETE SIDEWALK 5 INCH	SQ FT	36	36			
44000100	PAVEMENT REMOVAL	SQ YD	349	349			
50200100	STRUCTURE EXCAVATION	CU YD	395		395		
50300225	CONCRETE STRUCTURES	CU YD	684.9		684.9		
50300285	FORM LINER TEXTURED SURFACE	SQ FT	4,460		4,460		
50300300	PROTECTIVE COAT	SQ YD	1,011		1,011		
50301350	CONCRETE SUPERSTRUCTURE (APPROACH SLAB)	CU YD	9.5		9.5		
50800205	REINFORCEMENT BARS, EPOXY COATED	POUND	233,830		233,830		
51200957	FURNISHING METAL SHELL PILES 12" X 0.250"	FOOT	2,756		2,756		
51202305	DRIVING PILES	FOOT	2,756		2,756		
51203200	TEST PILE METAL SHELLS	EACH	6		6		
51500100	NAME PLATES	EACH	1		1		
51603000	DRILLED SHAFT IN SOIL	CU YD	760.6		760.6		
58600101	GRANULAR BACKFILL FOR STRUCTURES	CU YD	18		18		
58700300	CONCRETE SEALER	SQ FT	2,542		2,542		
59100100	GEOCOMPOSITE WALL DRAIN	SQ YD	14		14		
60146304	PIPE UNDERDRAINS FOR STRUCTURES 4"	FOOT	31		31		

SPECIALTY ITEM

	CODE NUMBER	PAY ITEM	UNIT	TOTAL QUANTITY	ITEP / TAP-L			STP
					80% FED /20% LOCAL	80% FED / 20% LOCAL	80% FED /20% LOCAL	80% FED / 20% LOCAL
					MULTI-USE PATH	BRIDGE	TRAINEES	MULTI-USE PATH
					0028	0028	0042	0028
					URBAN	URBAN	URBAN	URBAN
	67000400	ENGINEER'S FIELD OFFICE, TYPE A	CAL MO	12		12		
	67100100	MOBILIZATION	L SUM	1.0		1.0		
#	72000100	SIGN PANEL - TYPE 1	SQ FT	18	18			
#	72800100	TELESCOPING STEEL SIGN SUPPORT	FOOT	26	26			
#	72900100	METAL POST - TYPE A	FOOT	13	13			
#	80400100	ELECTRIC SERVICE INSTALLATION	EACH	1	1			
#	80400200	ELECTRIC UTILITY SERVICE CONNECTION	L SUM	1	1			
#	81028210	UNDERGROUND CONDUIT, GALVANIZED STEEL, 2 1/2" DIA.	FOOT	120	120			
#	81100300	CONDUIT ATTACHED TO STRUCTURE, 1" DIA., GALVANIZED STEEL	FOOT	1,280	630	650		
#	81100500	CONDUIT ATTACHED TO STRUCTURE, 1 1/2" DIA., GALVANIZED STEEL	FOOT	1,410	780	630		
#	81200100	CONDUIT EMBEDDED IN STRUCTURE, 1" DIA., GALVANIZED STEEL	FOOT	20		20		
#	81300220	JUNCTION BOX, STAINLESS STEEL, ATTACHED TO STRUCTURE, 6" X 6" X 4"	EACH	20	20			
#	81300550	JUNCTION BOX, STAINLESS STEEL, ATTACHED TO STRUCTURE, 12" X 12" X 6"	EACH	1	1			
#	81300900	JUNCTION BOX, STAINLESS STEEL, ATTACHED TO STRUCTURE, 20" X 16" X 6"	EACH	6		6		
#	81300980	JUNCTION BOX, STAINLESS STEEL, EMBEDDED IN STRUCTURE, 8" X 8" X 6"	EACH	4		4		
#	81603000	UNIT DUCT, 600V, 2-1C NO.8, 1/C NO.8 GROUND, (XLP-TYPE USE), 3/4" DIA. POLYETHYLENE	FOOT	45	45			
#	81603020	UNIT DUCT, 600V, 3-1C NO.10, 1/C NO.10 GROUND, (XLP-TYPE USE), 3/4" DIA. POLYETHYLENE	FOOT	45	45			
#	81702110	ELECTRIC CABLE IN CONDUIT, 600V (XLP-TYPE USE) 1/C NO. 10	FOOT	2,380	1,720	660		
#	81702120	ELECTRIC CABLE IN CONDUIT, 600V (XLP-TYPE USE) 1/C NO. 8	FOOT	5,050	2,800	2,250		

SPECIALTY ITEM

		CODE NUMBER	PAY ITEM	UNIT	TOTAL QUANTITY	ITEP / TAP-L			STP
						80% FED /20% LOCAL	80% FED / 20% LOCAL	80% FED /20% LOCAL	80% FED / 20% LOCAL
						MULTI-USE PATH	BRIDGE	TRAINEES	MULTI-USE PATH
						0028	0028	0042	0028
						URBAN	URBAN	URBAN	URBAN
#		81702450	ELECTRIC CABLE IN CONDUIT, 600V (XLP-TYPE USE) 3-1/C NO. 10	FOOT	2,380	1,720	660		
#		81702460	ELECTRIC CABLE IN CONDUIT, 600V (XLP-TYPE USE) 3-1/C NO. 3/0	FOOT	130	130			
#		82500360	LIGHTING CONTROLLER, BASE MOUNTED, 480VOLT, 100AMP	EACH	1	1			
#		A2002520	TREE, CARPINUS CAROLINIANA (AMERICAN HORNBEAM), 2-1/2" CALIPER, BALLED AND BURLAPPED	EACH	10	10			
#		A2002920	TREE, CELTIS OCCIDENTALIS (COMMON HACKBERRY), 2-1/2" CALIPER, BALLED AND BURLAPPED	EACH	14	14			
#		A2006516	TREE, QUERCUS BICOLOR (SWAMP WHITE OAK), 2" CALIPER, BALLED AND BURLAPPED	EACH	16	16			
#		A2007620	TREE, TAXODIUM DISTICHUM (COMMON BALD CYPRESS), 2-1/2" CALIPER, BALLED AND BURLAPPED	EACH	25	25			
		X0320051	CROSSHOLE SONIC LOGGING ACCESS DUCTS	FOOT	2,020		2,020		
		X0320052	CROSSHOLE SONIC LOGGING TESTING	EACH	6		6		
		X0322508	PEDESTRIAN TRUSS SUPERSTRUCTURE	SQ FT	8,778		8,778		
#		X0326672	PEDESTRIAN BRIDGE LIGHTING SYSTEM	L SUM	1		1		
		X0326806	WASHOUT BASIN	L SUM	1	1			
		X0327997	TRASH RECEPTACLES	EACH	2	2			
#		X1400238	LUMINAIRE, LED, SPECIAL	EACH	20	20			
#		X1400494	AESTHETIC LED STRIP LIGHT, 4W/FT, WHITE	FOOT	72		72		
#		X1400496	AESTHETIC LED STRIP LIGHT DRIVER - 24V POWER SUPPLY	EACH	4		4		
#		X1900003	SEEDING, CLASS 5B (MODIFIED)	ACRE	2.8	2.8			
#		X2111230	PLANTING SOIL MIX FURNISH AND PLACE, 30"	SQ YD	91	91			
#		X2502024	SEEDING, CLASS 4B (MODIFIED)	ACRE	3.2	3.2			

SPECIALTY ITEM

	CODE NUMBER	PAY ITEM	UNIT	TOTAL QUANTITY	ITEP / TAP-L			STP
					80% FED /20% LOCAL	80% FED / 20% LOCAL	80% FED /20% LOCAL	80% FED / 20% LOCAL
					MULTI-USE PATH	BRIDGE	TRAINEES	MULTI-USE PATH
					0028	0028	0042	0028
					URBAN	URBAN	URBAN	URBAN
#	X2511630	EROSION CONTROL BLANKET (SPECIAL)	SQ YD	15,682	15,682			
	X5030290	STAINING CONCRETE STRUCTURES	SQ FT	4,662		4,662		
	X7010216	TRAFFIC CONTROL AND PROTECTION, (SPECIAL)	L SUM	1.0		1.0		
#	X7200095	FURNISH AND ERECT SIGN PANEL	SQ FT	1,940		1,940		
#	X8300001	LIGHT POLE, SPECIAL	EACH	20	20			
	XX007324	RECYCLING RECEPTACLE	EACH	2	2			
	XX008287	BOARDWALK STRUCTURE	SQ FT	25,242		25,242		
	Z0003850	BENCHES	EACH	4	4			
#	Z0007124	STEEL RAILING (SPECIAL)	FOOT	3,633		3,633		
	Z0013797	STABILIZED CONSTRUCTION ENTRANCE	SQ YD	409	409			
	Z0013798	CONSTRUCTION LAYOUT	L SUM	1	1			
	Z0076600	TRAINEES	HOUR	1,000			1,000	
	Z0076604	TRAINEES TRAINING PROGRAM GRADUATE	HOUR	1,000			1,000	

SPECIALTY ITEM

MODEL: Default
FILE NAME: pw:\\hq-pwint03.a-e.transyscorp.com:transyscorp-pw1\Documents\Projects 2021\CH401 - Chicago\P401210087 - Streamwood - Pedestrian Bridge over IL 59 - Phase II\303.00 - Road\303.01 - Standard Sheets\03 Summary of Quantities\210087-SHT-SQQ-01

TRANSYSTEMS

USER NAME = lmnainggolan	DESIGNED -	REVISED -
	DRAWN -	REVISED -
PLOT SCALE = 40.0000 ' / in.	CHECKED -	REVISED -
PLOT DATE = 6/7/2023	DATE -	REVISED -

STATE OF ILLINOIS
DEPARTMENT OF TRANSPORTATION

IL 59 PEDESTRIAN OVERPASS
SUMMARY OF QUANTITIES

SCALE: NONE | SHEET 5 OF 5 SHEETS | STA. TO STA.

F.A.U RTE.	SECTION	COUNTY	TOTAL SHEETS	SHEET NO.
338	21-00067-00-BR	COOK	90	7

CONTRACT NO. 61J67

ILLINOIS FED. AID PROJECT

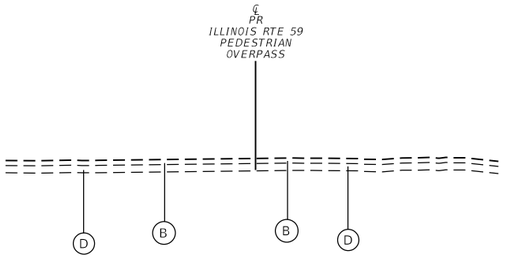

EXISTING TYPICAL SECTION

ILLINOIS ROUTE 59
PEDESTRIAN OVERPASS
STA 99+94.36 TO STA 100+02.36

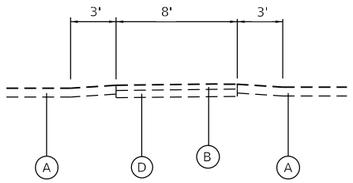

EXISTING TYPICAL SECTION

EXISTING HMA MULTI-USE PATH
WEST LIMITS OF PROPOSED BOARD WALK
TO ILLINOIS ROUTE 59

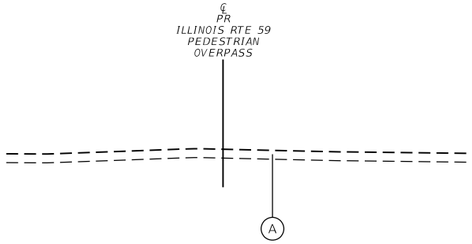

EXISTING TYPICAL SECTION

ILLINOIS ROUTE 59
PEDESTRIAN OVERPASS
STA 100+02.36 TO STA 122+66.71

EXISTING LEGEND

- (A) EXISTING TOPSOIL, 7"
- (B) EXISTING HMA SHARED USE PATH
- (C) EXISTING PCC SIDEWALK
- (D) EXISTING AGGREGATE BASE COURSE

PROPOSED LEGEND

- (1) HMA SURFACE COURSE, IL-9.5, MIX "D", N50, 4"
- (2) PCC SIDEWALK 5 INCH
- (3) AGGREGATE BASE COURSE, TYPE B 6"
- (4) TOPSOIL EXCAVATION AND PLACEMENT, SEEDING, & EROSION CONTROL BLANKET (SPECIAL).

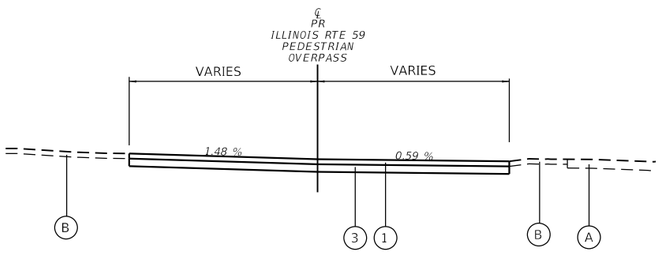

PROPOSED TYPICAL SECTION

ILLINOIS ROUTE 59
PATH TRANSITION
STA 99+94.36 TO STA 100+02.36
STA 122+54.11 TO STA 122+66.72

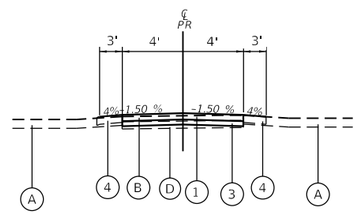

PROPOSED TYPICAL SECTION

REPLACEMENT HMA MULTI-USE PATH
WEST LIMITS OF PROPOSED BOARD WALK
TO ILLINOIS ROUTE 59

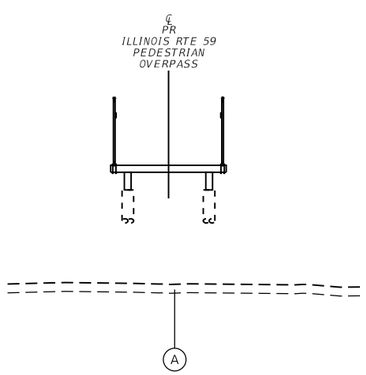

PROPOSED TYPICAL SECTION

ILLINOIS ROUTE 59
PEDESTRIAN OVERPASS
STA 100+14.08 TO STA 106+68.85
STA 112+95.85 TO STA 122+44.11

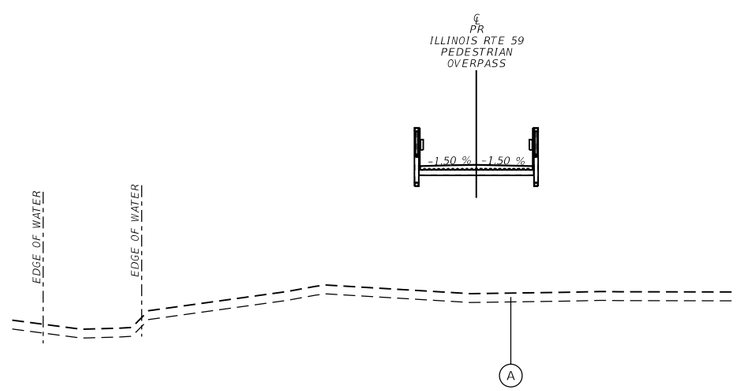

PROPOSED TYPICAL SECTION

ILLINOIS ROUTE 59
PEDESTRIAN OVERPASS
STA 106+68.85 TO STA 112+95.85

HOT-MIX ASPHALT MIXTURE REQUIREMENTS CHART		
MIXTURE TYPE	AIR VOIDS @ Ndes	QMP
MULTI-USE PATH & PATH TRANSITION		
HOT-MIX ASPHALT SURFACE COURSE, IL-9.5, MIX "D", N50 4" (IN 2 LIFTS)	4% @ 50 GYR.	LR 1030-2
QMP DESIGNATION: QUALITY ASSURANCE (QC/QA) PRE LR1030-2		

THE UNIT WEIGHT USED TO CALCULATE ALL HMA SURFACE MIXTURE QUANTITIES IS 112 LBS/SQYD/IN.

THE "AC TYPE" FOR POLYMERIZED HMA MIXES SHALL BE "SBS/SBR PG 76-22" AND FOR NON-POLYMERIZED HMA THE "AC TYPE" SHALL BE "PG 64-22" UNLESS MODIFIED BY RECLAIMED MATERIALS SPECIFICATIONS.

SUMMARY OF EARTHWORK

	21101505	20201200	20200100	EARTH EXCAVATION		EARTHWORK BALANCE	20400800
	TOPSOIL EXCAVATION AND PLACEMENT	REMOVAL AND DISPOSAL OF UNSUITABLE MATERIAL	EARTH EXCAVATION	(ADJ 15% FOR SHRINKAGE) + SUITABLE SUBBASE	EMBANKMENT	EXCESS (+) OR SHORTAGE (-)	FURNISHED EX
	USED FOR PR DESIGN	TOPSOIL					
LOCATION	CU YD	CU YD	CU YD	CU YD	CU YD	CU YD	CU YD
STA 99+94.36 - STA 100+00.00			5	4.25	0.0	4.25	
STA 122+50.00 - STA 122+66.71	6	11	5	4.25	35.0	-30.75	
STA 122+50.00 - STA 122+66.71							
0-10 YEAR			220.0	187.0	140.0	47.00	
10-100 YEAR			240.0	204.0	65.0	139.00	
TOTAL	6	11	470.0	399.5	240.0	159.50	240
ROUNDED UP TO NEAREST 5	10	15	470				240

Tree Number	LOCATION	STATION	OFFSET	NO. OF STEMS	Size (Inches)	TREE REMOVAL (UNDER 6 UNIT DIAMETER)	TREE REMOVAL (6 TO 15 UNIT DIAMETER) 20100110	TREE REMOVAL (OVER 15 UNIT DIAMETER) 20100210
1	IL 59 OVERPASS	99+89.01	4.8' LT	1	10.0		10.0	
2	IL 59 OVERPASS	100+04.40	20.6' RT	2	15,15			30.0
3	IL 59 OVERPASS	100+30.77	15.8' RT	1	19.0			19.0
4	IL 59 OVERPASS	104+06.65	17.5' RT	1	21.0			21.0
5	IL 59 OVERPASS	104+30.71	27.1' LT	3	20, 18, 11			49.0
6	IL 59 OVERPASS	106+68.71	13.4' LT	1	6.0		6.0	
7	IL 59 OVERPASS	107+64.54	0.2' RT	1	15.0		15.0	
8	IL 59 OVERPASS	108+74.41	50.2' RT	1	14.0		14.0	
9	IL 59 OVERPASS	109+71.50	18.3' LT	4	9, 14, 8, 8			39.0
10	IL 59 OVERPASS	111+05.03	15.3' LT	5	5, 6, 10, 6, 5			32.0
11	IL 59 OVERPASS	111+23.68	13.6' LT	1	9.0		9.0	
12	IL 59 OVERPASS	111+23.69	16.4' LT	5	6, 7, 5, 4, 4			26.0
13	IL 59 OVERPASS	111+29.73	17.8' LT	6	3, 2, 5, 3, 7, 3			23.0
14	IL 59 OVERPASS	111+36.68	7.2' LT	1	12.0		12.0	
15	IL 59 OVERPASS	111+37.76	14.4' LT	6	4, 3, 5, 6, 5, 4			27.0
16	IL 59 OVERPASS	111+51.62	0.7' RT	1	18.0			18.0
17	IL 59 OVERPASS	111+55.12	15.4' RT	3	5, 6, 7			18.0
18	IL 59 OVERPASS	111+58.19	4.4' LT	1	11.0		11.0	
19	IL 59 OVERPASS	111+58.73	18.8' LT	1	10.0		10.0	
20	IL 59 OVERPASS	111+65.69	14.3' LT	1	16.0			16.0
21	IL 59 OVERPASS	111+78.04	3.8' RT	3	4, 8, 4			16.0
22	IL 59 OVERPASS	111+79.94	0.7' LT	3	9, 6		15.0	
23	IL 59 OVERPASS	111+80.27	4.2' LT	1	18.0			18.0
24	IL 59 OVERPASS	111+83.76	9.6' LT	3	9, 7			16.0
25	IL 59 OVERPASS	112+10.85	25.8' RT	3	8, 7		15.0	
26	IL 59 OVERPASS	112+11.57	26.2' RT	2	8, 8			16.0
27	IL 59 OVERPASS	112+12.15	14.9' LT	8	6, 4, 3, 3, 3, 3, 4, 3			29.0
28	IL 59 OVERPASS	112+15.70	21.9' RT	1	6.0		6.0	
29	IL 59 OVERPASS	112+22.21	13.3' LT	1	11.0		11.0	
30	IL 59 OVERPASS	112+33.77	9.3' RT	1	9.0		9.0	
31	IL 59 OVERPASS	112+36.64	23.4' RT	1	8.0		8.0	
32	IL 59 OVERPASS	112+41.20	21.4' LT	5	5, 7, 7, 7, 8			34.0
33	IL 59 OVERPASS	112+41.37	12.7' LT	1	6.0		6.0	
34	IL 59 OVERPASS	112+42.67	6.5' RT	1	8.0		8.0	
35	IL 59 OVERPASS	112+42.88	21.5' RT	1	6.0		6.0	
36	IL 59 OVERPASS	112+43.93	9.1' LT	1	7.0		7.0	
37	IL 59 OVERPASS	112+44.15	21.0' RT	1	6.0		6.0	
38	IL 59 OVERPASS	112+46.43	10.1' LT	1	6.0		6.0	
39	IL 59 OVERPASS	112+51.51	22.8' RT	1	6.0		6.0	
40	IL 59 OVERPASS	112+57.82	13.4' LT	1	8.0		8.0	
41	IL 59 OVERPASS	112+62.62	30.2' RT	1	9.0		9.0	
42	IL 59 OVERPASS	112+77.58	11.4' LT	3	9, 8			17.0
43	IL 59 OVERPASS	112+78.56	48.8' RT	1	10.0		10.0	
44	IL 59 OVERPASS	112+82.76	37.0' RT	1	8.0		8.0	
45	IL 59 OVERPASS	112+84.30	9.5' LT	1	8.0		8.0	
46	IL 59 OVERPASS	112+86.01	4.2' LT	1	10.0		10.0	
47	IL 59 OVERPASS	112+88.56	38.4' RT	1	7.0		7.0	

Tree Number	LOCATION	STATION	OFFSET	NO. OF STEMS	Size (Inches)	TREE REMOVAL (UNDER 6 UNIT DIAMETER)	TREE REMOVAL (6 TO 15 UNIT DIAMETER) 20100110	TREE REMOVAL (OVER 15 UNIT DIAMETER) 20100210
48	IL 59 OVERPASS	112+89.19	10.7' LT	1	14.0		14.0	
49	IL 59 OVERPASS	113+19.41	23.3' RT	1	7.0		7.0	
50	IL 59 OVERPASS	113+28.34	33.1' LT	3	10, 18			28.0
51	IL 59 OVERPASS	113+40.06	3.8' RT	1	9.0		9.0	
52	IL 59 OVERPASS	113+68.64	15.4' RT	1	7.0		7.0	
53	IL 59 OVERPASS	113+81.55	6.6' RT	2	9, 3		12.0	
54	IL 59 OVERPASS	114+43.95	24.9' LT	3	7, 4, 2		13.0	
55	IL 59 OVERPASS	115+13.76	25.5' LT	5	8, 7, 3, 6, 8			32.0
56	IL 59 OVERPASS	115+54.10	25.7' LT	2	15, 14			29.0
57	IL 59 OVERPASS	115+60.48	8.9' RT	3	10, 10, 9			29.0
58	IL 59 OVERPASS	115+73.52	16.0' RT	1	8.0		8.0	
59	IL 59 OVERPASS	116+04.98	15.1' RT	1	25.0			25.0
60	IL 59 OVERPASS	116+17.67	12.0' RT	1	7.0		7.0	
61	IL 59 OVERPASS	116+26.98	7.6' RT	1	9.0		9.0	
62	IL 59 OVERPASS	116+37.51	0.6' LT	1	8.0		8.0	
63	IL 59 OVERPASS	116+42.16	6.3' RT	1	8.0		8.0	
64	IL 59 OVERPASS	116+42.24	3.6' LT	1	9.0		9.0	
65	IL 59 OVERPASS	116+44.72	22.3' LT	2	9,5		14.0	
66	IL 59 OVERPASS	116+50.22	5.0' RT	1	8.0		8.0	
67	IL 59 OVERPASS	116+50.52	25.9' LT	1	7.0		7.0	
68	IL 59 OVERPASS	116+53.39	15.6' RT	1	6.0		6.0	
69	IL 59 OVERPASS	116+54.61	6.5' RT	1	6.0		6.0	
70	IL 59 OVERPASS	116+54.91	23.2' LT	1	8.0		8.0	
71	IL 59 OVERPASS	116+57.09	25.2' LT	1	9.0		9.0	
72	IL 59 OVERPASS	116+62.77	7.7' LT	1	6.0		6.0	
73	IL 59 OVERPASS	116+62.83	2.7' LT	1	6.0		6.0	
74	IL 59 OVERPASS	116+63.45	10.5' LT	1	10.0		10.0	
75	IL 59 OVERPASS	116+64.29	11.1' LT	1	11.0		11.0	
76	IL 59 OVERPASS	116+69.84	16.5' LT	1	6.0		6.0	
77	IL 59 OVERPASS	116+71.35	20.0' LT	1	7.0		7.0	
78	IL 59 OVERPASS	116+83.69	16.4' LT	1	9.0		9.0	
79	IL 59 OVERPASS	116+83.75	15.5' LT	1	8.0		8.0	
80	IL 59 OVERPASS	116+97.29	11.5' LT	1	10.0		10.0	
81	IL 59 OVERPASS	116+98.15	12.0' LT	1	11.0		11.0	
82	IL 59 OVERPASS	117+07.22	46.8' RT	1	6.0		6.0	
83	IL 59 OVERPASS	117+10.24	22.1' LT	1	7.0		7.0	
84	IL 59 OVERPASS	117+60.72	34.8' RT	1	7.0		7.0	
85	IL 59 OVERPASS	117+69.74	31.0' RT	1	6.0		6.0	
86	IL 59 OVERPASS	117+76.31	18.1' RT	1	6.0		6.0	
87	IL 59 OVERPASS	117+82.46	10.1' RT	1	6.0		6.0	
88	IL 59 OVERPASS	117+84.36	8.3' RT	1	7.0		7.0	
89	IL 59 OVERPASS	118+09.66	24.2' LT	1	8.0		8.0	
90	IL 59 OVERPASS	118+69.74	24.3' LT	1	7.0		7.0	
91	IL 59 OVERPASS	118+74.02	27.3' LT	2	8,9			17.0
92	IL 59 OVERPASS	118+75.68	35.3' LT	1	7.0		7.0	
93	IL 59 OVERPASS	118+94.13	3.6' RT	1	6.0		6.0	
94	IL 59 OVERPASS	119+02.36	37.8' RT	1	6.0		6.0	
95	IL 59 OVERPASS	119+03.42	20.2' RT	1	8.0		8.0	

Tree Number	LOCATION	STATION	OFFSET	NO. OF STEMS	Size (Inches)	TREE REMOVAL (UNDER 6 UNIT DIAMETER)	TREE REMOVAL (6 TO 15 UNIT DIAMETER) 20100110	TREE REMOVAL (OVER 15 UNIT DIAMETER) 20100210
96	IL 59 OVERPASS	119+05.09	32.0' RT	1	6.0		6.0	
97	IL 59 OVERPASS	119+06.18	29.8' RT	1	6.0		6.0	
98	IL 59 OVERPASS	119+15.86	35.9' RT	2	6, 6		12.0	
99	IL 59 OVERPASS	119+19.81	8.1' RT	1	7.0		7.0	
100	IL 59 OVERPASS	119+25.72	29.2' RT	1	6.0		6.0	
101	IL 59 OVERPASS	119+29.76	23.4' RT	1	7.0		7.0	
102	IL 59 OVERPASS	119+31.81	31.8' RT	1	6.0		6.0	
103	IL 59 OVERPASS	119+34.85	17.6' RT	1	7.0		7.0	
104	IL 59 OVERPASS	119+40.72	15.5' LT	1	14.0		14.0	
105	IL 59 OVERPASS	119+42.58	9.8' LT	1	7.0		7.0	
106	IL 59 OVERPASS	119+47.09	8.4' LT	1	7.0		7.0	
107	IL 59 OVERPASS	119+52.69	3.5' RT	1	6.0		6.0	
108	IL 59 OVERPASS	119+53.44	10.8' RT	1	6.0		6.0	
109	IL 59 OVERPASS	119+53.53	12.3' LT	1	7.0		7.0	
110	IL 59 OVERPASS	119+59.68	2.7' LT	1	6.0		6.0	
111	IL 59 OVERPASS	119+61.38	6.3' RT	1	9.0		9.0	
112	IL 59 OVERPASS	119+61.81	1.8' LT	1	7.0		7.0	
113	IL 59 OVERPASS	119+62.87	17.0' LT	1	7.0		7.0	
114	IL 59 OVERPASS	119+63.19	9.4' RT	1	7.0		7.0	
115	IL 59 OVERPASS	119+66.63	10.9' RT	1	6.0		6.0	
116	IL 59 OVERPASS	119+67.98	12.5' RT	1	7.0		7.0	
117	IL 59 OVERPASS	119+69.59	8.1' LT	1	7.0		7.0	
118	IL 59 OVERPASS	119+73.77	10.1' LT	1	6.0		6.0	
119	IL 59 OVERPASS	119+79.04	3.5' LT	1	7.0		7.0	
120	IL 59 OVERPASS	119+79.23	4.6' LT	1	7.0		7.0	
121	IL 59 OVERPASS	119+79.24	12.3' LT	1	9.0		9.0	
122	IL 59 OVERPASS	119+82.90	5.8' RT	1	10.0		10.0	
123	IL 59 OVERPASS	119+90.79	1.7' LT	3	6, 8, 9			23.0
124	IL 59 OVERPASS	119+90.91	4.7' LT	3	6,8,9			23.0
125	IL 59 OVERPASS	119+93.50	9.4' RT	1	6.0		6.0	
126	IL 59 OVERPASS	119+96.41	5.4' LT	1	9.0		9.0	
127	IL 59 OVERPASS	120+03.16	5.7' RT	1	6.0		6.0	
128	IL 59 OVERPASS	120+03.80	9.2' RT	1	7.0		7.0	
129	IL 59 OVERPASS	120+08.05	10.2' RT	1	8.0		8.0	
130	IL 59 OVERPASS	120+18.43	6.1' RT	3	5,6,7			18.0
131	IL 59 OVERPASS	120+25.91	10.8' RT	1	10.0		10.0	
132	IL 59 OVERPASS	120+48.03	12.5' RT	1	9.0		9.0	
133	IL 59 OVERPASS	120+52.80	23.3' LT	1	10.0		10.0	
134	IL 59 OVERPASS	121+05.56	8.1' LT	1	6.0		6.0	
135	IL 59 OVERPASS	121+06.88	4.7' RT	1	8.0		8.0	
136	IL 59 OVERPASS	121+17.88	18.8' LT	1	6.0		6.0	
137	IL 59 OVERPASS	121+57.95	21.7' LT	1	6.0		6.0	
138	IL 59 OVERPASS	121+59.05	4.1' RT	1	8.0		8.0	
139	IL 59 OVERPASS	121+80.51	6.3' RT	1	6.0		6.0	
140	IL 59 OVERPASS	122+01.09	11.2' LT	1	7.0		7.0	
141	IL 59 OVERPASS	122+27.10	5.7' LT	1	7.0		7.0	
142	IL 59 OVERPASS	122+32.84	22.1' LT	1	7.0		7.0	
143	IL 59 OVERPASS	122+39.26	15.2' RT	1	7.0		7.0	

Tree Number	LOCATION	STATION	OFFSET	NO. OF STEMS	Size (Inches)	TREE REMOVAL (UNDER 6 UNIT DIAMETER)	TREE REMOVAL (6 TO 15 UNIT DIAMETER) 20100110	TREE REMOVAL (OVER 15 UNIT DIAMETER) 20100210
144	IL 59 OVERPASS	122+49.35	19.5' LT	1	9.0		9.0	
145	IL 59 OVERPASS	122+51.90	13.1' LT	6	10,10,3,4,8,4			39.0
146	IL 59 OVERPASS	122+53.53	2.8' LT	1	16.0			16.0
147	IL 59 OVERPASS	122+56.28	10.8' RT	1	7.0		7.0	
148	IL 59 OVERPASS	122+57.26	7.7' RT	1	7.0		7.0	
149	IL 59 OVERPASS	122+57.35	3.7' RT	1	7.0		7.0	
150	IL 59 OVERPASS	122+63.37	29.1' RT	1	12.0		12.0	
151	IL 59 OVERPASS	119.71.1	9.7' LT	1	7.0		7.0	
						TOTAL	977.0	743.0

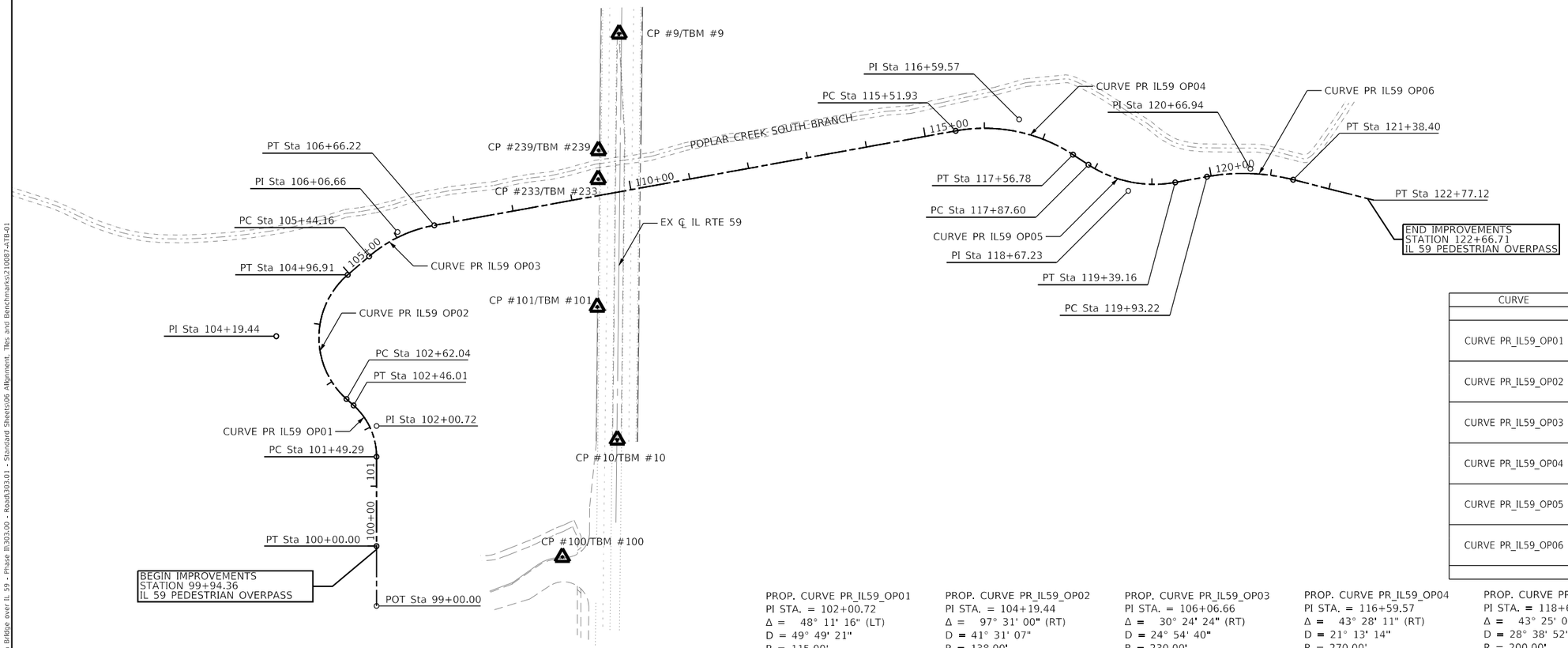

COORDINATE INFORMATION

CURVE	POT, PC/PI/PT	NORTHING	EASTING
	POT	1,950,654.86	1,019,266.26
CURVE PR_IL59_OP01	PC	1,950,904.15	1,019,266.26
	PI	1,950,955.58	1,019,266.26
	PT	1,950,989.87	1,019,227.93
CURVE PR_IL59_OP02	PC	1,951,000.55	1,019,215.99
	PI	1,951,105.49	1,019,098.67
	PT	1,951,208.08	1,019,218.05
CURVE PR_IL59_OP03	PC	1,951,238.87	1,019,253.89
	PI	1,951,279.60	1,019,301.29
	PT	1,951,290.74	1,019,362.80
CURVE PR_IL59_OP04	PC	1,951,448.57	1,020,234.34
	PI	1,951,467.75	1,020,340.25
	PT	1,951,408.80	1,020,430.31
CURVE PR_IL59_OP05	PC	1,951,391.92	1,020,456.10
	PI	1,951,348.32	1,020,522.73
	PT	1,951,362.43	1,020,601.09
CURVE PR_IL59_OP06	PC	1,951,372.02	1,020,654.30
	PI	1,951,385.09	1,020,726.84
	PT	1,951,366.94	1,020,798.29
	POT	1,951,332.79	1,020,932.73

PROP. CURVE PR_IL59_OP01
PI STA. = 102+00.72
Δ = 48° 11' 16" (LT)
D = 49° 49' 21"
R = 115.00'
T = 51.43'
L = 96.72'
E = 10.98'
P.C. STA. = 101+49.29
P.T. STA. = 102+46.01

PROP. CURVE PR_IL59_OP02
PI STA. = 104+19.44
Δ = 97° 31' 00" (RT)
D = 41° 31' 07"
R = 138.00'
T = 157.40'
L = 234.87'
E = 71.33'
P.C. STA. = 102+62.04
P.T. STA. = 104+96.91

PROP. CURVE PR_IL59_OP03
PI STA. = 106+06.66
Δ = 30° 24' 24" (RT)
D = 24° 54' 40"
R = 230.00'
T = 62.50'
L = 122.06'
E = 8.34'
P.C. STA. = 105+44.16
P.T. STA. = 106+66.22

PROP. CURVE PR_IL59_OP04
PI STA. = 116+59.57
Δ = 43° 28' 11" (RT)
D = 21° 13' 14"
R = 270.00'
T = 107.64'
L = 204.85'
E = 20.66'
P.C. STA. = 115+51.93
P.T. STA. = 117+56.78

PROP. CURVE PR_IL59_OP05
PI STA. = 118+67.23
Δ = 43° 25' 02" (LT)
D = 28° 38' 52"
R = 200.00'
T = 79.62'
L = 151.55'
E = 15.27'
P.C. STA. = 117+87.60
P.T. STA. = 119+39.16

PROP. CURVE PR_IL59_OP06
PI STA. = 120+66.94
Δ = 24° 27' 54" (RT)
D = 16° 51' 06"
R = 340.00'
T = 73.71'
L = 145.18'
E = 7.90'
P.C. STA. = 119+93.22
P.T. STA. = 121+38.40

CONTROL POINT SUMMARY

NAME	NORTHING	EASTING	DESCRIPTION
CP #9	1,951,610.612	1,019,671.556	FOUND PK NAIL CENTER OF IL 59 MEDIAN, SOUTH OF MAGNOLIA DRIVE.
CP #10	1,950,932.347	1,019,668.469	SET MAG NAIL CENTER OF IL 59 MEDIAN, NORTH OF PRAIRIE POINTE LANE
CP #100	1,950,736.647	1,019,576.905	SET MAG NAIL ON EXISTING LIGHT POLE FOUNDATION.
CP #101	1,951,154.475	1,019,635.197	SET MAG NAIL ON TOP OF SOUTHBOUND WINGWALL, NORTH OF PRAIRIE POINTE LANE.
CP #233	1,951,367.770	1,019,636.708	SET MAG NAIL ON TOP OF SOUTHBOUND WINGWALL, NORTH OF POPLAR CREEK SOUTH BRANCH.
CP #239	1,951,415.926	1,019,637.274	SET MAG NAIL ON TOP OF SOUTHBOUND WINGWALL, SOUTH OF POPLAR CREEK SOUTH BRANCH.

BENCHMARK SUMMARY

NAME	ELEVATION	STATION	DESCRIPTION
TBM #9	782.01	STA 110+27.03, 259.73' LT	FOUND PK NAIL CENTER OF IL 59 MEDIAN, SOUTH OF MAGNOLIA DRIVE.
TBM #10	781.07	STA 101+55.56, 402.98' RT	SET MAG NAIL CENTER OF IL 59 MEDIAN, NORTH OF PRAIRIE POINTE LANE
TBM #100	783.88	STA 99+81.79, 310.64' RT	SET MAG NAIL ON EXISTING LIGHT POLE FOUNDATION.
TBM #101	781.37	STA 109+09.98, 182.62' RT	SET MAG NAIL ON TOP OF SOUTHBOUND WINGWALL, NORTH OF PRAIRIE POINTE LANE.
TBM #233	782.19	STA 109+49.47, 26.99' LT	SET MAG NAIL ON TOP OF SOUTHBOUND WINGWALL, NORTH OF POPLAR CREEK SOUTH BRANCH.
TBM #239	782.06	STA 109+58.61, 74.27' LT	SET MAG NAIL ON TOP OF SOUTHBOUND WINGWALL, SOUTH OF POPLAR CREEK SOUTH BRANCH.

DATUMS: HORIZONTAL = ILLINOIS STATE PLANE
VERTICAL = NAVD 88

N

0 100 200 300
SCALE IN FEET

MODEL: Default
FILE NAME: pw:\\hi-pwfil01.a-e.transystems.com:transystems-pw\Documents\Projects_2021\CH401 - CHicago\P401210087 - Streamwood - Pedestrian Bridge over IL 59 - Phase II\303.00 - Roadway\303.01 - Standard Sheets\06 Alignment, Ties and Benchmarks\210087-ATB-01

TRANSYSTEMS

USER NAME = lmnainggolan	DESIGNED -	REVISED -
	DRAWN -	REVISED -
PLOT SCALE = 200.0000 ' / in.	CHECKED -	REVISED -
PLOT DATE = 5/23/2023	DATE -	REVISED -

STATE OF ILLINOIS
DEPARTMENT OF TRANSPORTATION

IL 59 PEDESTRIAN OVERPASS
ALIGNMENT, TIES, AND BENCHMARKS

SCALE: 1"=100' | SHEET 1 OF 1 SHEETS | STA. TO STA.

F.A.U RTE.	SECTION	COUNTY	TOTAL SHEETS	SHEET NO.
338	21-00067-00-BR	COOK	90	12
		CONTRACT NO. 61J67		
		ILLINOIS	FED. AID PROJECT	

NOTES:

1. SEE SHEETS 10 TO 11 FOR TREE REMOVAL SCHEDULE.
2. TREE REMOVALS LESS THAN 6 INCHES IN DIAMETER SHALL NOT BE MEASURED FOR PAYMENT AS NOTED IN THE STANDARD SPECIFICATION.

REMOVAL LEGEND

PAVEMENT REMOVAL

TREE REMOVAL
(SEE TREE REMOVAL SCHEDULE)

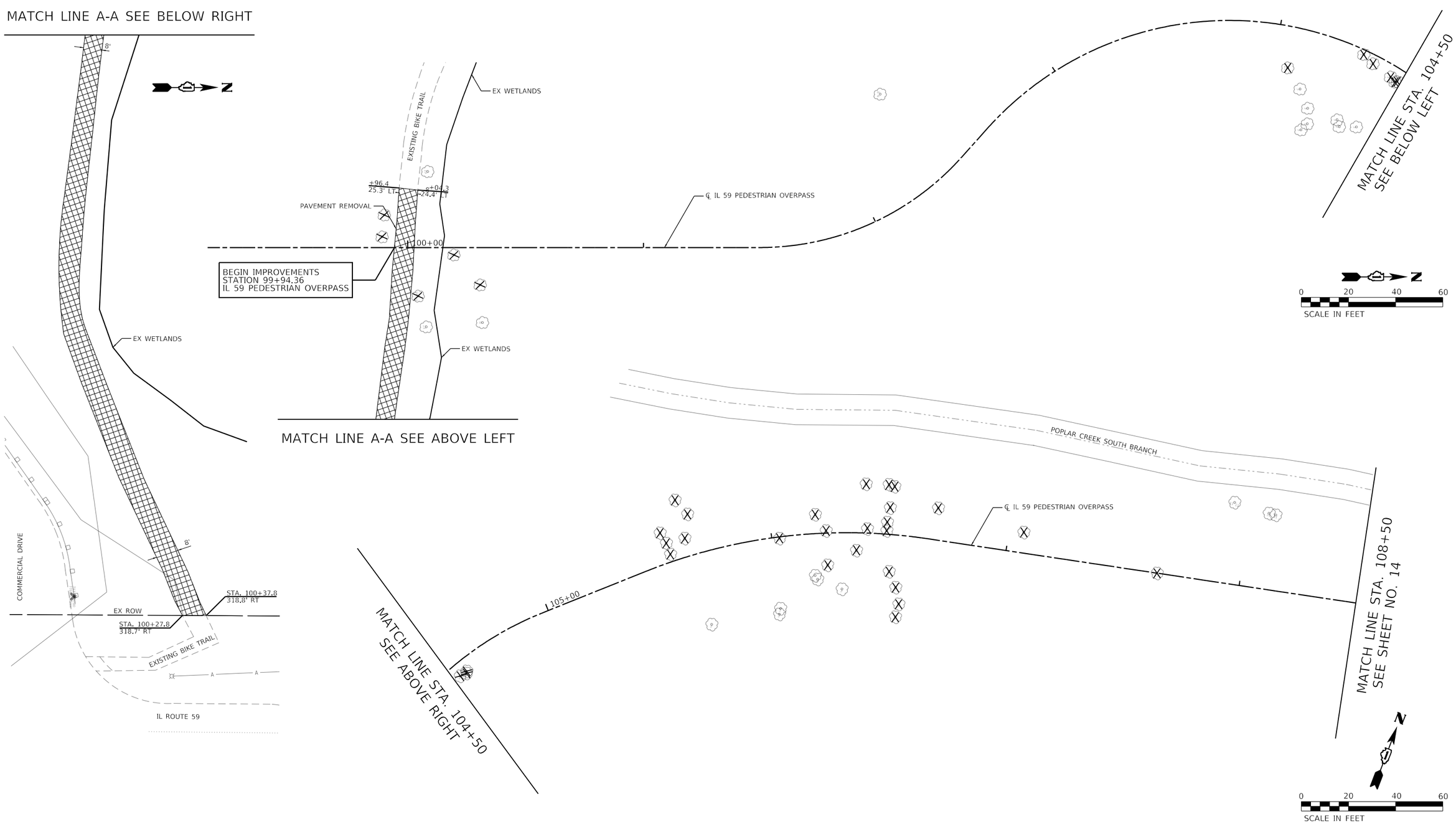

MODEL: Default
FILE NAME: pw:\\ts-pwhb01.a-e.transyscorp.com:transyscorp-pw1\Documents\Projects_2021\CH401 - CNCorp\P401210087 - Streamwood - Pedestrian Bridge over IL 59 - Phase II\393.00 - Roadway\393.01 - Standard Sheets\XX Removal Plans\0087-SHT-REM-01.dgn

TRANSYSTEMS

USER NAME = lmnainggolan	DESIGNED -	REVISED -
	DRAWN -	REVISED -
PLOT SCALE = 40.0000 ' / in.	CHECKED -	REVISED -
PLOT DATE = 5/23/2023	DATE -	REVISED -

STATE OF ILLINOIS
DEPARTMENT OF TRANSPORTATION

IL 59 PEDESTRIAN OVERPASS
REMOVAL PLANS

SCALE: 1"=20' | SHEET 1 OF 3 SHEETS | STA. TO STA.

F.A.U RTE.	SECTION	COUNTY	TOTAL SHEETS	SHEET NO.
338	21-00067-00-BR	COOK	90	13
		CONTRACT NO. 61J67		
		ILLINOIS	FED. AID PROJECT	

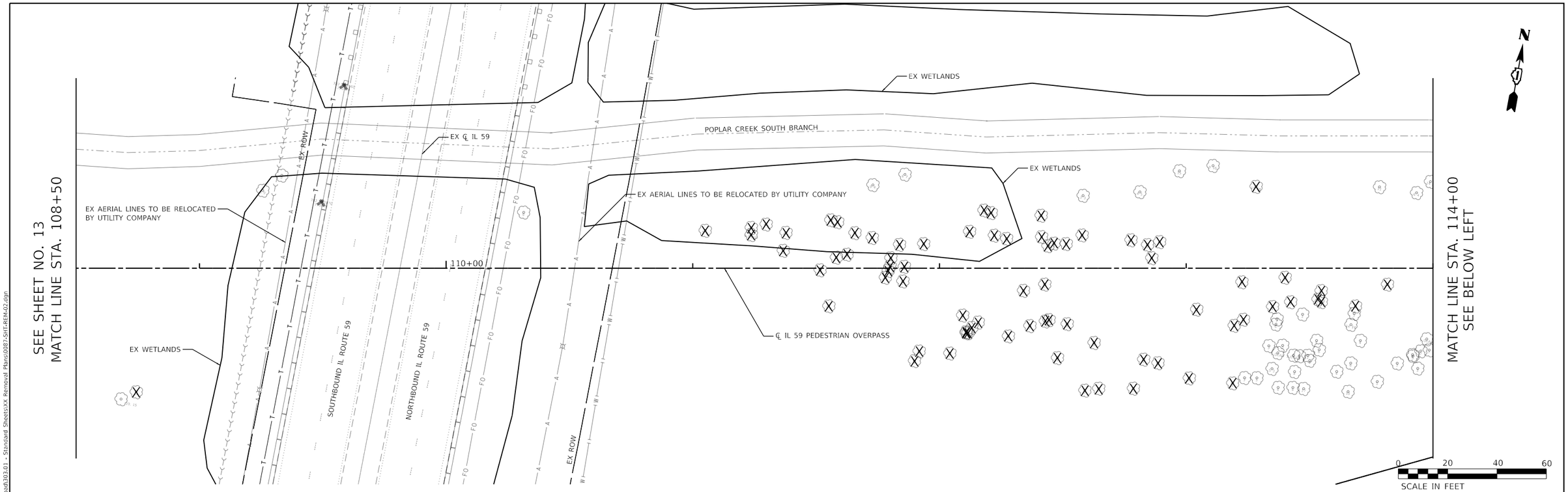

NOTES:

1. SEE SHEETS 10 TO 11 FOR TREE REMOVAL SCHEDULE.
2. TREE REMOVALS LESS THAN 6 INCHES IN DIAMETER SHALL NOT BE MEASURED FOR PAYMENT AS NOTED IN THE STANDARD SPECIFICATION.

REMOVAL LEGEND

⊗ TREE REMOVAL (SEE TREE REMOVAL SCHEDULE)

MODEL: Default
FILE NAME: pw:\\ts-pwfn01a-ic.transystems.com:transystems-pw\Documents\Projects_2021\CH401 - CHicago\P40121\0087 - Streamwood - Pedestrian Bridge over IL 59 - Phase II\393.00 - Roadway\303.01 - Standard Sheets\XX Removal Plans\0087-SHT-REM-02.dgn

TRANSYSTEMS	USER NAME = lmnainggolan	DESIGNED -	REVISED -	STATE OF ILLINOIS DEPARTMENT OF TRANSPORTATION	IL 59 PEDESTRIAN OVERPASS REMOVAL PLANS	F.A.U RTE.	SECTION	COUNTY	TOTAL SHEETS	SHEET NO.
		DRAWN -	REVISED -			338	21-00067-00-BR	COOK	90	14
	PLOT SCALE = 40.0000 ' / in.	CHECKED -	REVISED -			CONTRACT NO. 61J67				
	PLOT DATE = 5/23/2023	DATE -	REVISED -		SCALE: 1"=20' SHEET 2 OF 3 SHEETS STA. 108+50 TO STA. 117+50	ILLINOIS	FED. AID PROJECT			

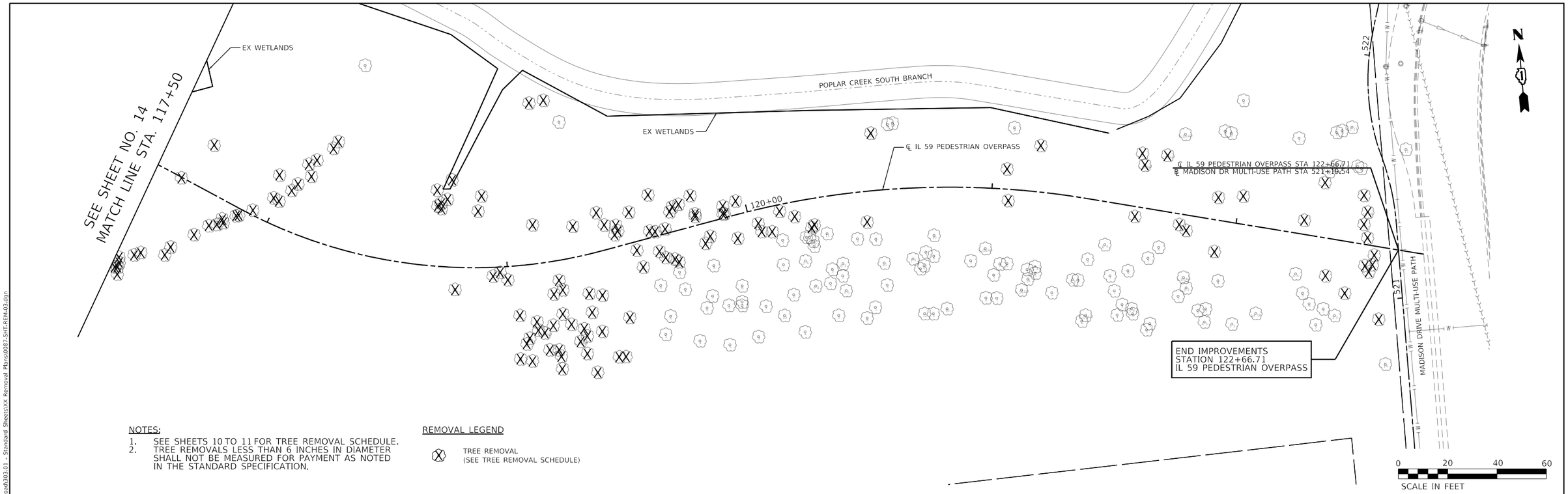

NOTES:

1. SEE SHEETS 10 TO 11 FOR TREE REMOVAL SCHEDULE.
2. TREE REMOVALS LESS THAN 6 INCHES IN DIAMETER SHALL NOT BE MEASURED FOR PAYMENT AS NOTED IN THE STANDARD SPECIFICATION.

REMOVAL LEGEND

⊗ TREE REMOVAL (SEE TREE REMOVAL SCHEDULE)

MODEL: Default
FILE NAME: pw:\\ts-pwint01.ts-ch.transystems.com:transyscorp-pw11\Documents\Projects_2021\CH401 - Cities\ppP34012100087 - Streamwood - Pedestrian Bridge over IL 59 - Phase II\303.00 - Roadway\303.01 - Standard Sheets\XX Removal Plans\0087-SHT-REM-03.dgn

TRANSYSTEMS

USER NAME = lmnainggolan	DESIGNED -	REVISED -
	DRAWN -	REVISED -
PLOT SCALE = 40.0000 ' / in.	CHECKED -	REVISED -
PLOT DATE = 5/23/2023	DATE -	REVISED -

STATE OF ILLINOIS
DEPARTMENT OF TRANSPORTATION

IL 59 PEDESTRIAN OVERPASS
REMOVAL PLANS

SCALE: 1"=20' | SHEET 3 OF 3 SHEETS | STA. 117+50 TO STA. 122+66.71

F.A.U RTE.	SECTION	COUNTY	TOTAL SHEETS	SHEET NO.
338	21-00067-00-BR	COOK	90	15
		CONTRACT NO. 61J67		
	ILLINOIS	FED. AID PROJECT		

NOTES:
1. SEE STRUCTURAL SHEETS 55 - 59 FOR BOARDWALK DETAILS.
2. SEE STRUCTURAL SHEET 54 FOR BOARDWALK OVERLOOK PLAN.

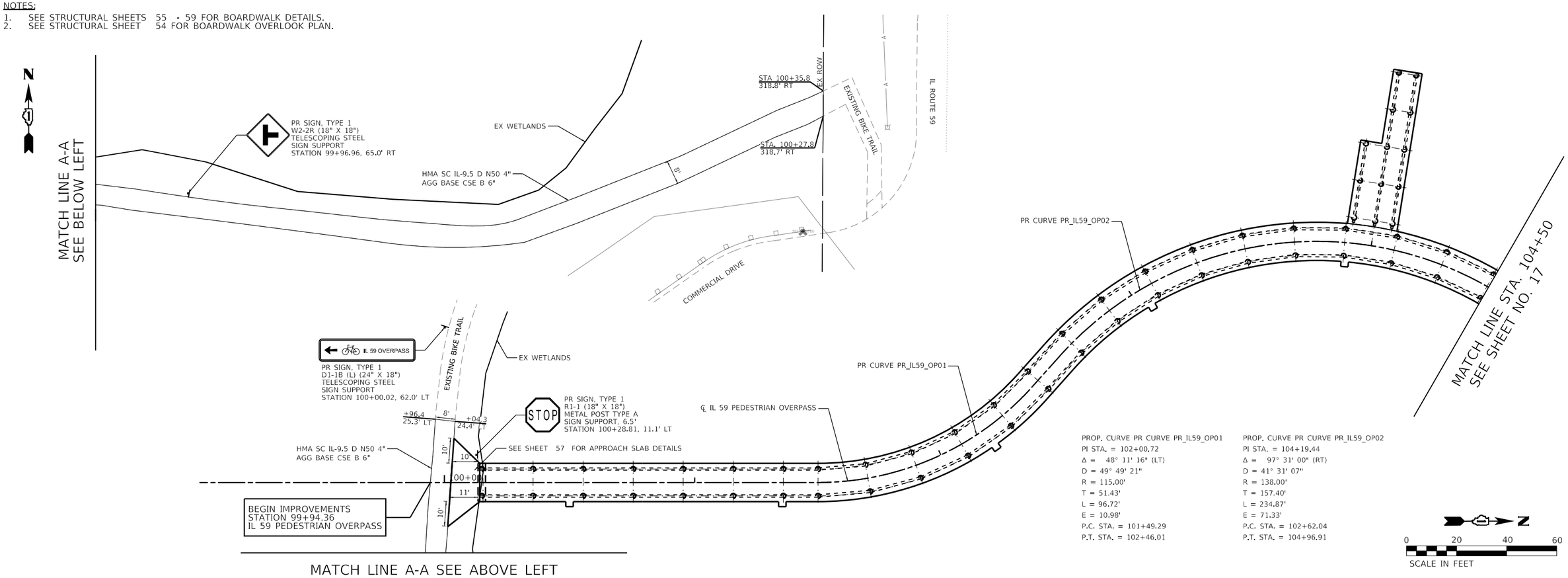

PROP. CURVE PR CURVE PR_IL59_OP01
PI STA. = 102+00.72
Δ = 48° 11' 16" (LT)
D = 49° 49' 21"
R = 115.00'
T = 51.43'
L = 96.72'
E = 10.98'
P.C. STA. = 101+49.29
P.T. STA. = 102+46.01

PROP. CURVE PR CURVE PR_IL59_OP02
PI STA. = 104+19.44
Δ = 97° 31' 00" (RT)
D = 41° 31' 07"
R = 138.00'
T = 157.40'
L = 234.87'
E = 71.33'
P.C. STA. = 102+62.04
P.T. STA. = 104+96.91

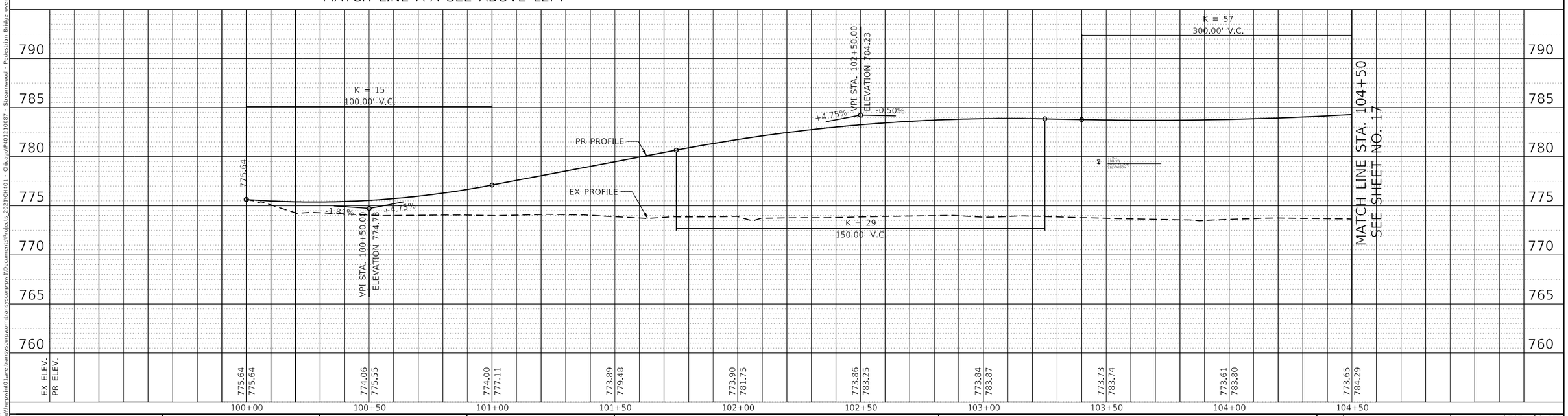

PLAN	BY	DATE
SURVEYED		
PLOTTED		
ALIGNMENT CHECKED		
RT. OF WAY CHECKED		
CADD FILE NAME		
NOTE BOOK NO.		

PROFILE	BY	DATE
SURVEYED		
PLOTTED		
GRADES CHECKED		
B.M. NOTED		
STRUCTURE NOTATNS CHKD		
NOTE BOOK NO.		

MODEL: Default
FILE NAME: pw:\\ts-pwint01.ae-e.transyscorp.com:transyscorp-pw1\Documents\Projects_2021\CH401 - Chicago\P401210087 - Streamwood - Pedestrian Bridge over IL 59 - Phase II\303.00 - Road\303.01 - Standard Sheets\07 Plan and Profile and Signing\Plan and Profile Sheet -

TRANSYSTEMS

USER NAME = lmnainggolan	DESIGNED -	REVISED -	
	DRAWN -	REVISED -	
PLOT SCALE = 40.0000 ' / in.	CHECKED -	REVISED -	
PLOT DATE = 5/23/2023	DATE -	REVISED -	

STATE OF ILLINOIS
DEPARTMENT OF TRANSPORTATION

IL 59 PEDESTRIAN OVERPASS
PLAN AND PROFILE AND SIGNING PLAN

SCALE: 1"=20' | SHEET 1 OF 5 SHEETS | STA. 100+00 TO STA. 104+50

F.A.U RTE.	SECTION	COUNTY	TOTAL SHEETS	SHEET NO.
338	21-00067-00-BR	COOK	90	16
		CONTRACT NO. 61J67		
		ILLINOIS	FED. AID PROJECT	

NOTES:

1. SEE STRUCTURAL SHEETS 55 - 59 FOR BOARDWALK DETAILS.

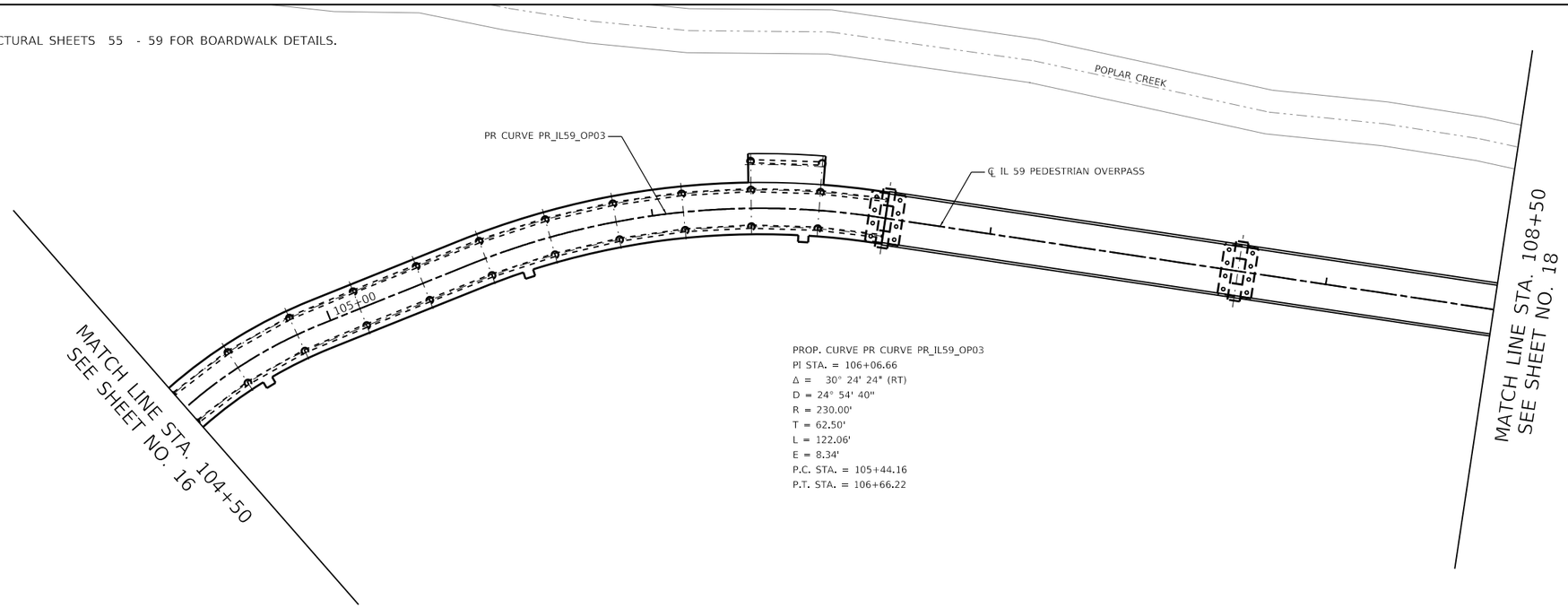

PROP. CURVE PR CURVE PR_IL59_OP03
PI STA. = 106+06.66
Δ = 30° 24' 24" (RT)
D = 24° 54' 40"
R = 230.00'
T = 62.50'
L = 122.06'
E = 8.34'
P.C. STA. = 105+44.16
P.T. STA. = 106+66.22

0 20 40 60
SCALE IN FEET

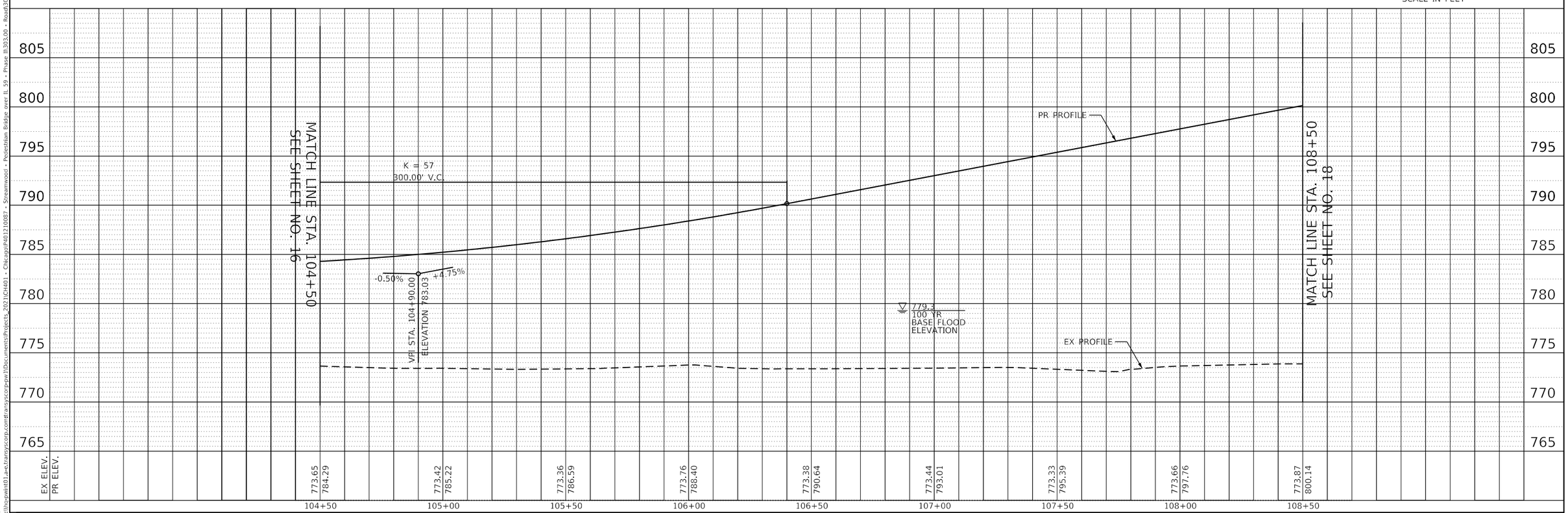

PLAN		BY	DATE
NOTE BOOK NO.____	SURVEYED ____ PLOTTED ____ ALIGNMENT CHECKED ____ RT. OF WAY CHECKED ____ CADD FILE NAME ____		

PROFILE		BY	DATE
NOTE BOOK NO.____	SURVEYED ____ PLOTTED ____ GRADES CHECKED ____ B.M. NOTED ____ STRUCTURE NOTATNS CHKD ____		

MODEL: Default
FILE NAME: pw:\\ts-pwint01.ae.transyscorp.com:ransyscorp-pw1\Documents\Projects_2021\CH401 - Chicago\P401210087 - Streamwood - Pedestrian Bridge over IL 59 - Phase II\303.00 - Road\303.01 - Standard Sheets\07 Plan and Profile and Signing\0087-SHT-PP-02

TRANSYSTEMS

USER NAME = lmnainggolan	DESIGNED -	REVISED -
	DRAWN -	REVISED -
PLOT SCALE = 40.0000 ' / in.	CHECKED -	REVISED -
PLOT DATE = 5/23/2023	DATE -	REVISED -

STATE OF ILLINOIS
DEPARTMENT OF TRANSPORTATION

IL 59 PEDESTRIAN OVERPASS
PLAN AND PROFILE AND SIGNING PLAN

SCALE: 1"=20' | SHEET 2 OF 5 SHEETS | STA. 104+50 TO STA. 108+50

F.A.U RTE.	SECTION	COUNTY	TOTAL SHEETS	SHEET NO.
338	21-00067-00-BR	COOK	90	17
		CONTRACT NO. 61J67		
104+50	ILLINOIS	FED. AID PROJECT		

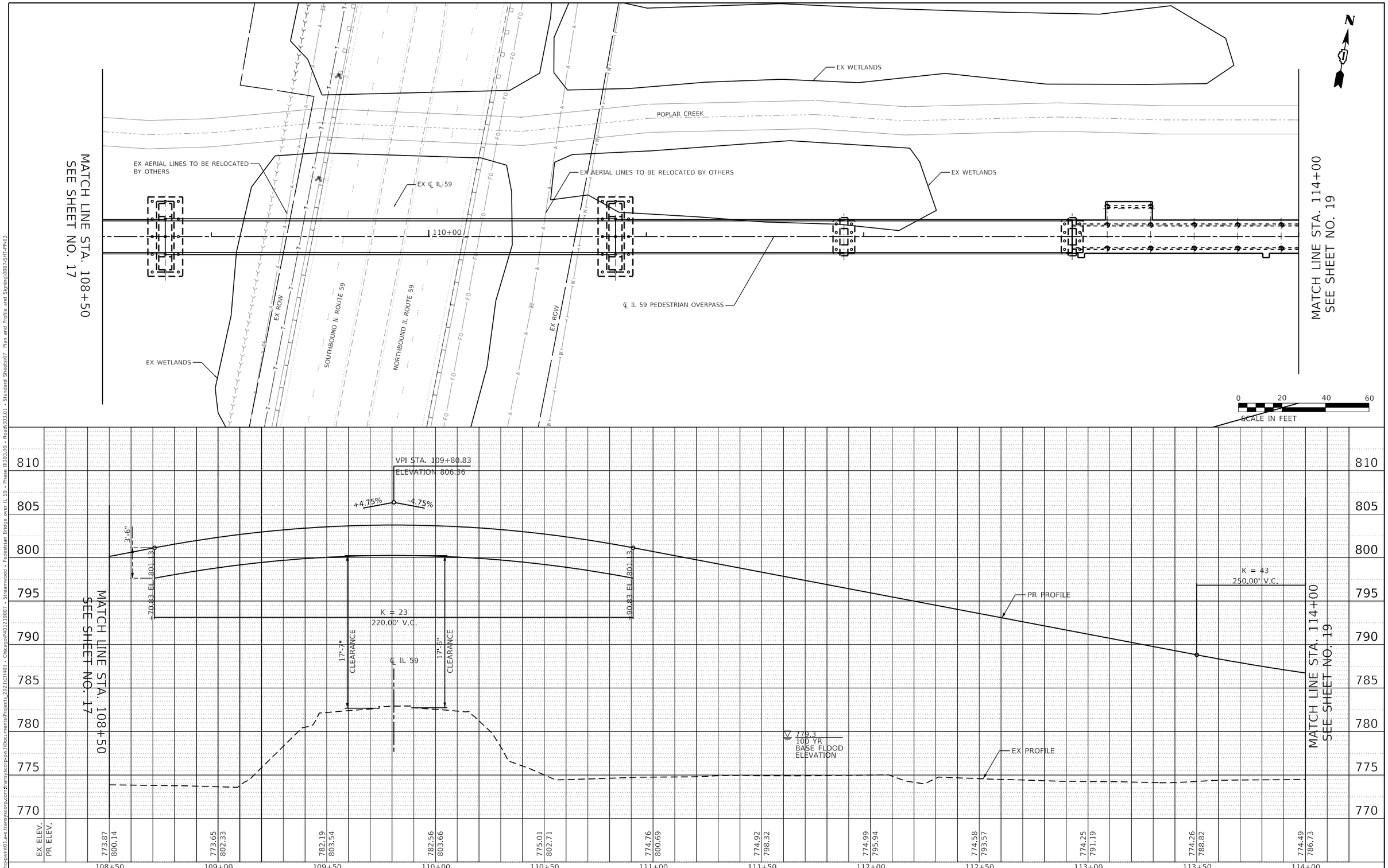

PLAN
NOTE BOOK NO.
SURVEYED
PLOTTED
ALIGNMENT CHECKED
RT. OF WAY CHECKED
CADD FILE NAME
BY
DATE

PROFILE
NOTE BOOK NO.
SURVEYED
PLOTTED
GRADES CHECKED
B.M. NOTED
STRUCTURE NOTAT'NS CHKD
BY
DATE

MODEL: Default
FILE NAME: pw:\\ts-pwin01.ad.transystems.com:transystemscorp-pw10\Documents\Projects_2021\CH401 - Chicago\P401210087 - Streamwood - Pedestrian Bridge over IL 59 - Phase II\303.00 - Road\303.01 - Standard Sheets\07 - Plan and Profile and Signing\0087-SHT-PP-03

TRANSYSTEMS

USER NAME = lmnainggolan	DESIGNED -	REVISED -	
	DRAWN -	REVISED -	
PLOT SCALE = 40.0000 ' / in.	CHECKED -	REVISED -	
PLOT DATE = 5/23/2023	DATE -	REVISED -	

STATE OF ILLINOIS
DEPARTMENT OF TRANSPORTATION

IL 59 PEDESTRIAN OVERPASS
PLAN AND PROFILE AND SIGNING PLAN

SCALE: 1"=20' | SHEET 3 OF 5 SHEETS | STA. 108+50 TO STA. 114+00

F.A.U RTE.	SECTION	COUNTY	TOTAL SHEETS	SHEET NO.
338	21-00067-00-BR	COOK	90	18
		CONTRACT NO. 61J67		
		ILLINOIS	FED. AID PROJECT	

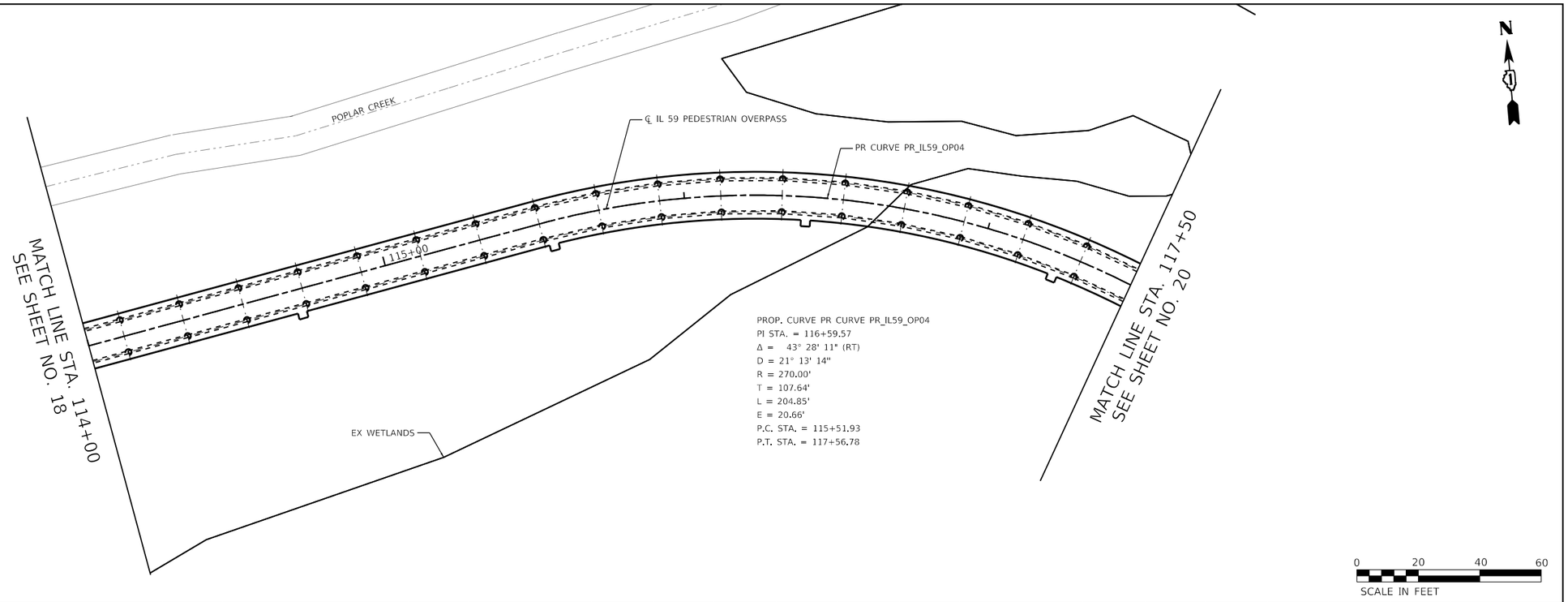

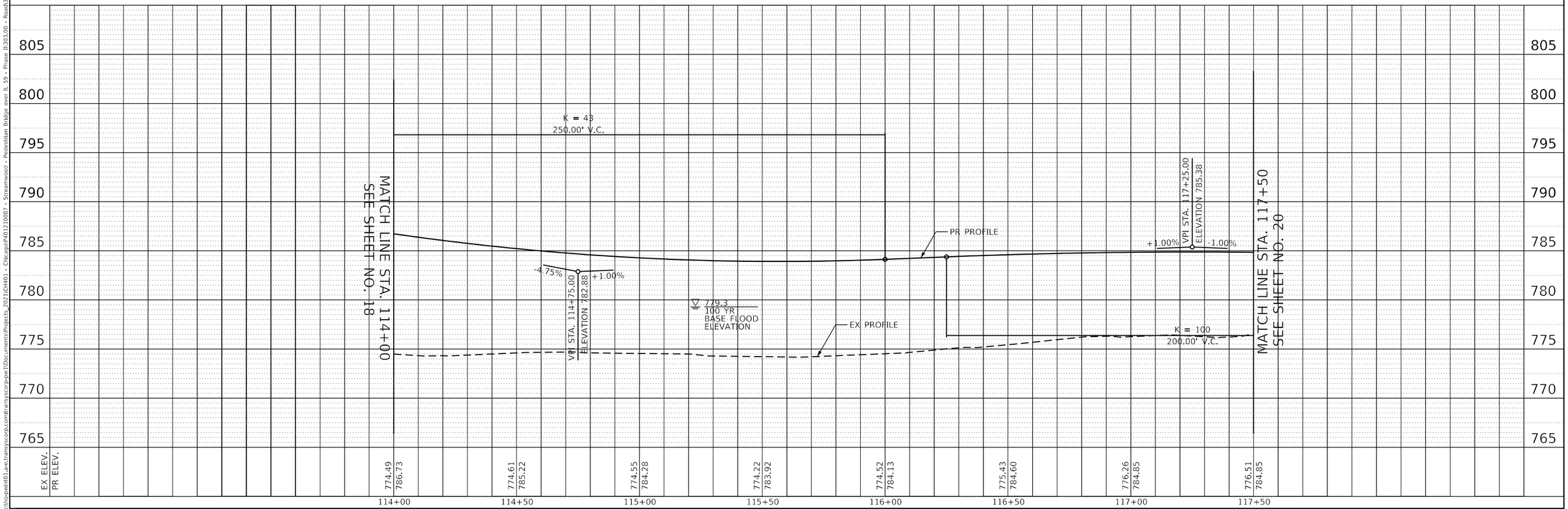

PLAN		BY	DATE
NOTE BOOK NO.____	SURVEYED ____ PLOTTED ____ ALIGNMENT CHECKED ____ RT. OF WAY CHECKED ____ CADD FILE NAME ____		

PROFILE		BY	DATE
NOTE BOOK NO.____	SURVEYED ____ PLOTTED ____ GRADES CHECKED ____ B.M. NOTED ____ STRUCTURE NOTATNS CHKD ____		

Plan and Profile and Signing\0087-SHT-PP-04

MODEL: Default
FILE NAME: pw:\\ts-pwin01.ae.transyscorp.com:transyscorp-pw1\Documents\Projects_2021\CH401 - Chicago\P401210087 - Streamwood - Pedestrian Bridge over IL 59 - Phase II\303.00 - Road\303.01 - Standard Sheets\07

TRANSYSTEMS

USER NAME = lmnainggolan	DESIGNED -	REVISED -
	DRAWN -	REVISED -
PLOT SCALE = 40.0000 ' / in.	CHECKED -	REVISED -
PLOT DATE = 5/23/2023	DATE -	REVISED -

STATE OF ILLINOIS
DEPARTMENT OF TRANSPORTATION

IL 59 PEDESTRIAN OVERPASS
PLAN AND PROFILE AND SIGNING PLAN

SCALE: 1"=20' | SHEET 4 OF 5 SHEETS | STA. 114+00 TO STA. 117+50

F.A.U RTE.	SECTION	COUNTY	TOTAL SHEETS	SHEET NO.
338	21-00067-00-BR	COOK	90	19
		CONTRACT NO. 61J67		
		ILLINOIS	FED. AID PROJECT	

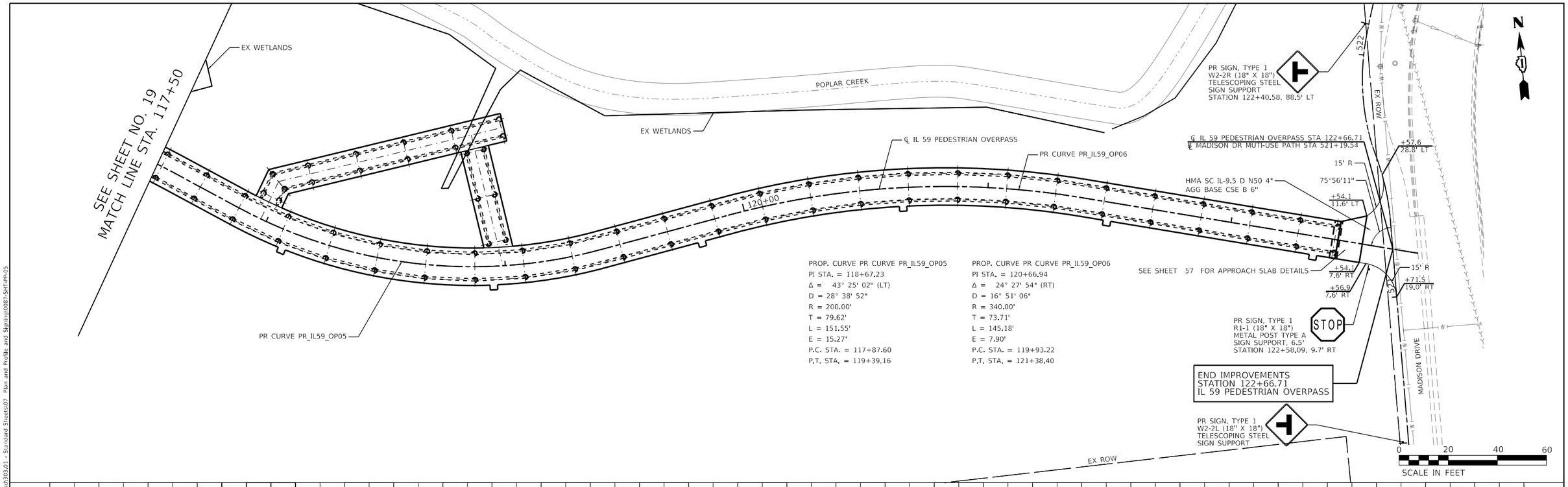

PROP. CURVE PR CURVE PR_IL59_OP05
PI STA. = 118+67.23
Δ = 43° 25' 02" (LT)
D = 28° 38' 52"
R = 200.00'
T = 79.62'
L = 151.55'
E = 15.27'
P.C. STA. = 117+87.60
P.T. STA. = 119+39.16

PROP. CURVE PR CURVE PR_IL59_OP06
PI STA. = 120+66.94
Δ = 24° 27' 54" (RT)
D = 16° 51' 06"
R = 340.00'
T = 73.71'
L = 145.18'
E = 7.90'
P.C. STA. = 119+93.22
P.T. STA. = 121+38.40

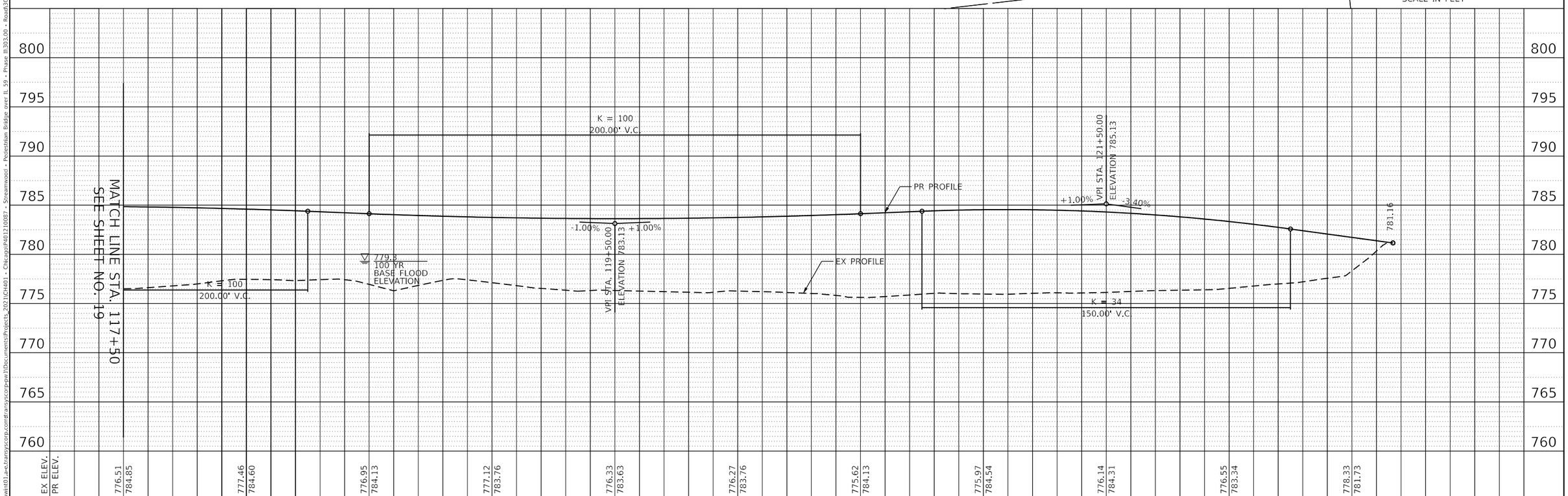

PLAN		BY	DATE
SURVEYED			
PLOTTED			
ALIGNMENT CHECKED			
RT. OF WAY CHECKED			
CADD FILE NAME			
NOTE BOOK			
NO.			

PROFILE		BY	DATE
SURVEYED			
PLOTTED			
GRADES CHECKED			
BKM. NOTED			
STRUCTURE NOTATNS CHKD			
NOTE BOOK			
NO.			

MODEL: Default
FILE NAME: pw:\\hopwint01.a-e.transyscorp.com:transyscorp-pw:1\Documents\Projects_2021\CH401 - Chicago\P401210087 - Streamwood - Pedestrian Bridge over IL 59 - Phase II\303.00 - Road\303.01 - Standard Sheets\07 Plan and Profile and Signing\0087-SHT-PP-05

TRANSYSTEMS

USER NAME = lmnainggolan	DESIGNED -	REVISED -	
	DRAWN -	REVISED -	
PLOT SCALE = 40.0000 ' / in.	CHECKED -	REVISED -	
PLOT DATE = 5/23/2023	DATE -	REVISED -	

STATE OF ILLINOIS
DEPARTMENT OF TRANSPORTATION

IL 59 PEDESTRIAN OVERPASS
PLAN AND PROFILE AND SIGNING PLAN

SCALE: 1"=20' | SHEET 5 OF 5 SHEETS | STA. 117+50 TO STA. 122+92.29

F.A.U RTE.	SECTION	COUNTY	TOTAL SHEETS	SHEET NO.
338	21-00067-00-BR	COOK	90	20
		CONTRACT NO. 61J67		
		ILLINOIS	FED. AID PROJECT	

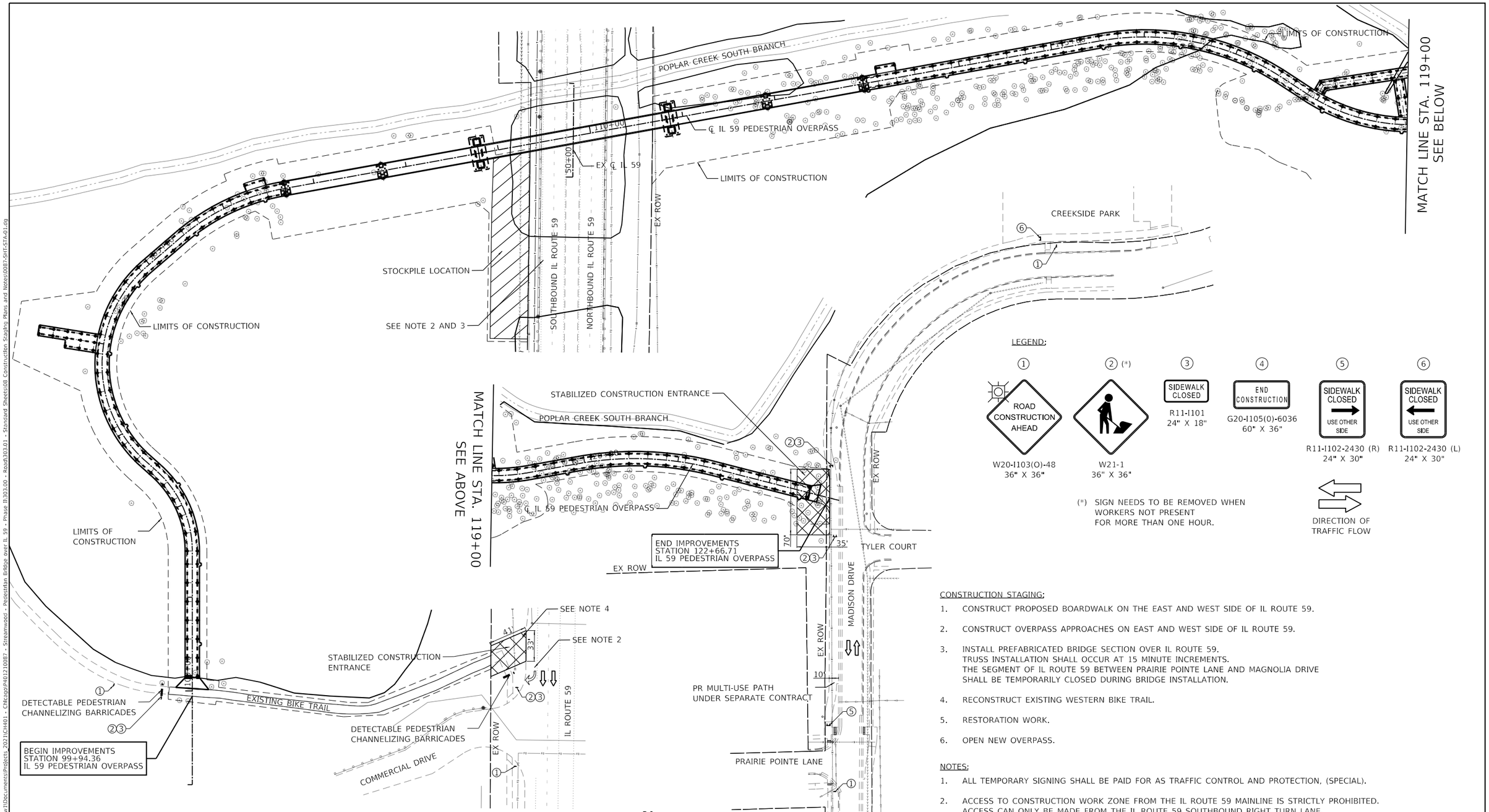

LEGEND:

1	2 (*)	3	4	5	6
ROAD CONSTRUCTION AHEAD		SIDEWALK CLOSED	END CONSTRUCTION	SIDEWALK CLOSED USE OTHER SIDE	SIDEWALK CLOSED USE OTHER SIDE
W20-I103(O)-48 36" X 36"	W21-1 36" X 36"	R11-I101 24" X 18"	G20-I105(0)-6036 60" X 36"	R11-I102-2430 (R) 24" X 30"	R11-I102-2430 (L) 24" X 30"

(*) SIGN NEEDS TO BE REMOVED WHEN WORKERS NOT PRESENT FOR MORE THAN ONE HOUR.

DIRECTION OF TRAFFIC FLOW

CONSTRUCTION STAGING:

1. CONSTRUCT PROPOSED BOARDWALK ON THE EAST AND WEST SIDE OF IL ROUTE 59.
2. CONSTRUCT OVERPASS APPROACHES ON EAST AND WEST SIDE OF IL ROUTE 59.
3. INSTALL PREFABRICATED BRIDGE SECTION OVER IL ROUTE 59. TRUSS INSTALLATION SHALL OCCUR AT 15 MINUTE INCREMENTS. THE SEGMENT OF IL ROUTE 59 BETWEEN PRAIRIE POINTE LANE AND MAGNOLIA DRIVE SHALL BE TEMPORARILY CLOSED DURING BRIDGE INSTALLATION.
4. RECONSTRUCT EXISTING WESTERN BIKE TRAIL.
5. RESTORATION WORK.
6. OPEN NEW OVERPASS.

NOTES:

1. ALL TEMPORARY SIGNING SHALL BE PAID FOR AS TRAFFIC CONTROL AND PROTECTION, (SPECIAL).
2. ACCESS TO CONSTRUCTION WORK ZONE FROM THE IL ROUTE 59 MAINLINE IS STRICTLY PROHIBITED. ACCESS CAN ONLY BE MADE FROM THE IL ROUTE 59 SOUTHBOUND RIGHT TURN LANE.
3. REFER TO IDOT HIGHWAY STANDARD 701426-09 FOR WORKZONE TRAFFIC CONTROL DURING MATERIAL DELIVERY FROM IL ROUTE 59 BRIDGE.
4. REFER TO IDOT HIGHWAY STANDARD 701101-05 FOR OFF ROAD OPERATIONS AT CONSTRUCTION ACCESS POINT.
5. CONTRACTOR SHALL AVOID DRIVING OVER AND/OR DAMAGING THE EXISTING ADA RAMP.

MODEL: Default
FILE NAME: pw:\\ts-pwfn01.a-e.transyscorp.com:transyscorp-pw10Documents\Projects_2021\CH401 - CHicagoP401210087 - Streamwood - Pedestrian Bridge over IL 59 - Phase II\303.00 - Roadway\303.01 - Standard Sheets\08 Construction Staging Plans and Notes\0087-SHT-STA-01.dgn

TRANSYSTEMS

USER NAME = lmnainggolan	DESIGNED - WBL	REVISED -	
	DRAWN - LMN	REVISED -	
PLOT SCALE = 100.0000 ' / in.	CHECKED - CEC	REVISED -	
PLOT DATE = 6/16/2023	DATE -	REVISED -	

STATE OF ILLINOIS
DEPARTMENT OF TRANSPORTATION

IL 59 PEDESTRIAN OVERPASS
CONSTRUCTION STAGING PLAN AND NOTES

SCALE: 1"=50' | SHEET 1 OF 1 SHEETS | STA. TO STA.

F.A.U RTE.	SECTION	COUNTY	TOTAL SHEETS	SHEET NO.
338	21-00067-00-BR	COOK	90	21
		CONTRACT NO. 61J67		
	ILLINOIS	FED. AID PROJECT		

EROSION AND SEDIMENTATION CONTROL NOTES

ALL CONSTRUCTION ACTIVITIES AND WATER QUALITY STANDARDS SHALL BE IN ACCORDANCE WITH THE IEPA NATIONAL POLLUTANT DISCHARGE ELIMINATION SYSTEM (NPDES), IEPA SECTION 401 WATER QUALITY CONDITIONS, SOIL AND WATER CONSERVATION DISTRICT (SWCD). SECTION 280 AND 282 OF THE STANDARD SPECIFICATIONS, IDOT CONSTRUCTION MEMORANDUM NO. 06-60, AND STORMWATER POLLUTION PREVENTION PLAN (SWPPP).
SEE IEPA 401 WATER QUALITY CONDITIONS AND SWPPP IN THE SPECIAL PROVISIONS.

UNLESS OTHERWISE INDICATED, ALL VEGETATIVE AND STRUCTURAL EROSION AND SEDIMENT CONTROL PRACTICES WILL BE CONSTRUCTED ACCORDING TO MINIMUM STANDARDS AND SPECIFICATIONS IN THE ILLINOIS URBAN MANUAL.

A COPY OF THE APPROVED EROSION AND SEDIMENT CONTROL PLAN SHALL BE MAINTAINED ON THE SITE AT ALL TIMES.

THE CONTRACTOR IS RESPONSIBLE FOR INSTALLATION OF ANY ADDITIONAL EROSION CONTROL MEASURES NECESSARY TO PREVENT EROSION AND SEDIMENTATION AS DETERMINED BY THE ENGINEER.

SOIL EROSION AND SEDIMENT CONTROL FEATURES SHALL BE CONSTRUCTED PRIOR TO THE COMMENCEMENT OF HYDROLOGIC DISTURBANCE OF UPLAND AREAS.

CONSTRUCTION LIMITS SHALL BE MINIMIZED TO KEEP SOIL DISTURBANCE TO A MINIMUM LEAVING AS MUCH EXISTING VEGETATION IN PLACE AS POSSIBLE. DIVERT "CLEAR" WATER FLOWING THROUGH THE CONSTRUCTION SITE AWAY FROM DISTURBED AREAS. INTERCEPT AND CONTAIN SEDIMENT CLOSE TO ITS SOURCE. ALL PROJECT-RELATED SEDIMENT SHALL BE RETAINED ON THE PROJECT SITE. NO RUNOFF FLOW FROM DISTURBED AREAS SHALL LEAVE THE SITE WITHOUT BEING TREATED.

ALL DISTURBED AREAS, EXISTING EROSION CONTROL MEASURES. VEHICLE ACCESS SITES AND ALL OTHER AREAS SUBJECT TO EROSION SHALL BE INSPECTED AT LEAST ONCE EVERY SEVEN DAYS AND WITHIN 24 HOURS OF THE END OF EACH ONE-HALF INCH OR GREATER RAINFALL OR EQUIVALENT SNOWFALL.

DISTURBED AREAS SHALL BE STABILIZED WITH TEMPORARY OR PERMANENT MEASURES WITHIN SEVEN (7) CALENDAR DAYS FOLLOWING THE END OF ACTIVE HYDROLOGIC DISTURBANCE.

THE CONTRACTOR SHALL COMPLETE PERMANENT EROSION CONTROL MEASURES AS SOON AS PRACTICAL AFTER THE COMPLETION OF GRADING. TEMPORARY MEASURES SHALL BE INSTALLED AND MAINTAINED UNTIL PERMANENT MEASURES ARE ESTABLISHED.

A QUANTITY OF TEMPORARY EROSION CONTROL SEEDING HAS BEEN PROVIDED TO REDUCE EROSION OF ALL EXPOSED EARTH SLOPES THAT ARE NOT READY FOR PERMANENT STABILIZATION. AREAS THAT REMAIN DENUDED FOR MORE THAN 14 DAYS, AREAS THAT WILL BE RE-DISTRIBUTED, AND STOCKPILES. THIS WORK SHALL BE PERFORMED IN ACCORDANCE WITH SECTION 280 OF THE STANDARD SPECIFICATIONS.

THE CONTRACTOR SHALL APPLY TEMPORARY EROSION CONTROL SEEDING TO ALL ERODIBLE BARE EARTH AREAS WITHIN THE CONTRACT LIMITS EACH WEEK REGARDLESS OF WEATHER CONDITIONS OR PROGRESS OF THE WORK, UNLESS OTHERWISE DIRECTED BY THE ENGINEER. ERODIBLE EMBANKMENT AND EXCAVATION AREAS WHERE WORK IS IN PROGRESS SHALL BE INCLUDED ON THE AREAS TO BE SEEDED.

ALL STORM SEWERS THAT ARE OR WILL BE FUNCTIONING DURING CONSTRUCTION SHALL BE PROTECTED BY AN APPROPRIATE SEDIMENT CONTROL MEASURE.

SOIL DISTURBANCE SHALL BE CONDUCTED IN SUCH A MANNER AS TO MINIMIZE EROSION. AREAS OF THE DEVELOPMENT SITE THAT ARE NOT TO BE GRADED SHALL BE PROTECTED FROM CONSTRUCTION TRAFFIC OR OTHER DISTURBANCE UNTIL FINAL SEEDING IS PERFORMED.

PROPERTIES AND CHANNELS ADJOINING THE DEVELOPMENT SITE SHALL BE PROTECTED FROM EROSION AND SEDIMENTATION.

A STABILIZED MAT OF AGGREGATE UNDERLAIN WITH FILTER CLOTH (OR OTHER APPROPRIATE MEASURES) SHALL BE LOCATED AT ANY POINT WHERE TRAFFIC WILL BE ENTERING OR LEAVING A CONSTRUCTION-SITE OF A MAJOR DEVELOPMENT TO OR FROM A PUBLIC RIGHT-OF-WAY, STREET, ALLEY OR PARKING AREA. ANY SEDIMENT OR SOIL REACHING AN IMPROVED PUBLIC RIGHT-OF-WAY, STREET, ALLEY OR PARKING AREA SHALL BE REMOVED BY SCRAPING OR STREET CLEANING AS ACCUMULATIONS WARRANT AND TRANSPORTED TO A CONTROLLED SEDIMENT DISPOSAL AREA. THE WORK DESCRIBED IN THIS PARAGRAPH SHALL BE PAID FOR AS STABILIZED CONSTRUCTION ENTRANCE.

DUST SHALL BE CONTROLLED IN ACCORDANCE WITH ARTICLE 107.36 OF THE STANDARD SPECIFICATIONS.

IF A STOCKPILE IS TO REMAIN IN PLACE FOR MORE THAN THREE DAYS THEN EROSION AND SEDIMENT CONTROL SHALL BE PROVIDED. STOCKPILES TO REMAIN IN PLACE FOR 30 DAYS OR MORE SHALL RECEIVE TEMPORARY SEEDING.

SOIL STOCKPILES SHALL NOT BE LOCATED IN A FLOOD-PRONE AREA OR A DESIGNATED BUFFER PROTECTING WATERS OF THE UNITED STATES, OR ISOLATED WATERS OF COOK COUNTY.

ALL TEMPORARY AND PERMANENT EROSION AND SEDIMENT CONTROL MEASURES SHALL BE MAINTAINED IN A WORKING CONDITION.

ALL EROSION CONTROL PRODUCTS FURNISHED SHALL BE SPECIFICALLY RECOMMENDED BY THE MANUFACTURER FOR THE USE SPECIFIED IN THE EROSION CONTROL PLAN. PRIOR TO THE APPROVAL AND USE OF THE PRODUCT, THE CONTRACTOR SHALL SUBMIT TO THE ENGINEER A NOTARIZED CERTIFICATION BY THE PRODUCER STATING THE INTENDED USE OF THE PRODUCT, AND THAT THE PHYSICAL PROPERTIES REQUIRED FOR THIS APPLICATION ARE MET OR EXCEEDED. THE CONTRACTOR SHALL PROVIDE MANUFACTURER INSTALLATION PROCEDURES TO FACILITATE THE ENGINEER IN CONSTRUCTION INSPECTIONS.

CONSTRUCTION EQUIPMENT SHALL BE STORED AND FUELED ONLY WITHIN THE PROJECT LIMITS AT LOCATIONS AS DESIGNATED BY THE ENGINEER. ALL NECESSARY MEASURES SHALL BE TAKEN TO CONTAIN ANY FUEL OF OTHER POLLUTANT IN ACCORDANCE WITH EPA WATER QUALITY REGULATIONS. LEAKING EQUIPMENT OR SUPPLIES SHALL BE IMMEDIATELY REPAIRED OR REMOVED FROM THE SITE.

THE CONTRACTOR SHALL PROVIDE WATER-TIGHT TANKS OR BARRELS, OR CONSTRUCT A SUMP SEALED WITH PLASTIC SHEETS TO BE USED TO DISPOSE OF CHEMICAL POLLUTANT, SUCH AS DRAINED LUBRICATING OR TRANSMISSION FLUIDS, GREASE, SOAPS, CONCRETE MIXER WASH WATER, ASPHALT, ETC., PRODUCED AS A BY-PRODUCT OF THE CONSTRUCTION ACTIVITIES. AT THE COMPLETION OF THE CONSTRUCTION WORK, SUMPS SHALL BE REMOVED AND THE AREA RESTORED TO ITS ORIGINAL CONDITION AS SPECIFIED IN SECTION 8 OF THE ILLINOIS URBAN MANUAL. SUMP REMOVAL SHALL BE CONDUCTED WITHOUT CAUSING POLLUTION.

SANITARY FACILITIES SUCH AS CHEMICAL TOILETS OR SEPTIC TANKS SHALL NOT BE LOCATED ADJACENT TO LIVE STREAMS, WELLS, OR SPRINGS. THEY SHALL BE LOCATED AT A DISTANCE SUFFICIENT TO PREVENT CONTAMINATION OF ANY WATER SOURCE. AT THE COMPLETION OF CONSTRUCTION ACTIVITIES, FACILITIES SHALL BE DISPOSED OF WITHOUT CAUSING POLLUTION.

ALL TEMPORARY SOIL EROSION AND SEDIMENT CONTROL MEASURES SHALL BE REMOVED WITHIN THIRTY (30) DAYS AFTER FINAL SITE STABILIZATION IS ACHIEVED OR AFTER THE TEMPORARY MEASURES ARE NO LONGER NEEDED. TRAPPED SEDIMENT AND OTHER DISTRIBUTED SOUL AREAS SHALL BE PERMANENTLY STABILIZED.

THE CONTRACTOR'S OPERATIONS SHALL NOT DISTURB THE SOUTH BRANCH OF POPLAR CREEK.

THE CONTRACTOR SHALL PROVIDE ADEQUATE RECEPTACLES FOR THE DEPOSITION OF ALL CONSTRUCTION MATERIAL DEBRIS GENERATED DURING THE DEVELOPMENT PROCESS.
THE CONTRACTOR SHALL NOT CAUSE OR PERMIT THE DUMPING, DEPOSITING, DROPPING, THROWING, DISCARDING OR LEAVING OF CONSTRUCTION MATERIAL DEBRIS UPON OR INTO ANY DEVELOPMENT SITE, CHANNEL, WATERS OF THE US., OR ISOLATED WATERS OF COOK COUNTY. THE CONTRACTOR SHALL MAINTAIN THE DEVELOPMENT SITE FREE OF CONSTRUCTION MATERIAL DEBRIS.

ALL HEAVY EQUIPMENT SHALL BE POWER-WASHED TO REMOVE ANY INVASIVE SEED PRESENT ON EQUIPMENT PRIOR TO ENTERING THE CONSTRUCTION SITE.

THE EXCAVATED MATERIAL BEING TRANSPORTED OFF SITE, SPECIFICALLY FROM THE WATERWAYS, SHALL BE PREVENTED FROM LEAKING OR SPILLING ONTO THE ROADWAYS BY DRYING THE MATERIAL BEFORE TRANSPORT, PROVIDING A LINER FOR THE TRUCKS, OR OTHER APPROVED METHODS.

EROSION AND SEDIMENTATION CONTROL SEQUENCES

I. THE FOLLOWING EROSION CONTROL MEASURES ARE TO BE INSTALLED PRIOR TO CLEARING:

SILT FENCES
ERECT ALL SILT FENCES AS SHOWN ON THE EROSION CONTROL PLANS TO CONTROL SEDIMENT FROM THE RUNOFF LEAVING THE DISTURBED AREAS.

TREE PROTECTION
INSTALL TREE PROTECTION TO THE TREES SHOWN ON THE EROSION AND SEDIMENT CONTROL PLAN OR AS DIRECTED BY THE ENGINEER.

II. THE FOLLOWING EROSION CONTROL MEASURE IS TO TAKE PLACE PRIOR TO GRADING:

TEMPORARY DITCH CHECK
INSTALL TEMPORARY AND PERMANENT DITCH CHECKS AT PROPOSED COMPENSATORY STORAGE LOCATION TO CONTROL RUNOFF VELOCITY AS SHOWN ON THE EROSION CONTROL PLAN OR AS DIRECTED BY ENGINEER.

III. WITHIN 7 DAYS OF THE COMPLETION OF CLEARING OR GRADING OR WITHIN 14 DAYS OF LAST DISTURBANCE, THE FOLLOWING MEASURE SHALL BE ENFORCED:

TEMPORARY STABILIZATION
PROVIDE TEMPORARY STABILIZATION OVER AREAS THAT CANNOT BE STABILIZED WITH PERMANENT VEGETATIVE MEASURES FOR 14 DAYS OR MORE AND CONSEQUENTLY REQUIRE TEMPORARY SEEDING AND TEMPORARY EROSION CONTROL BLANKED. THESE AREAS SHALL BE TREATED WITH PERMANENT VEGETATIVE COVER AT SOME FUTURE DATE.

PERMANENT EROSION CONTROL
PROVIDE PERMANENT VEGETATION AND INSTALL ALL THE PERMANENT EROSION CONTROL MEASURES AS SHOWN ON THE PLANS OR DIRECTED BY ENGINEER, BEFORE REMOVAL OF THE TEMPORARY EROSION CONTROL MEASURES.

IV. THE FOLLOWING MEASURES SHALL BE PROVIDED DURING THE CONTRACT ON AN AS NEEDED BASIS:

DUST CONTROL WATERING
DUST CONTROL WATERING SHALL BE APPLIED TO CONTROL THE DUST RESULTING FROM THE CONSTRUCTION OPERATION.

STREET CLEANING AND SWEEPING
STREET CLEANING AND SWEEPING SHALL BE PERFORMED ON EACH WORKDAYS, AS REQUIRED AND DIRECTED AND APPROVED BY THE ENGINEER. COST FOR THIS WORK WILL BE INCLUDED IN THE COST OF EARTH EXCAVATION.

STABILIZED CONSTRUCTION ENTRANCE PLAN

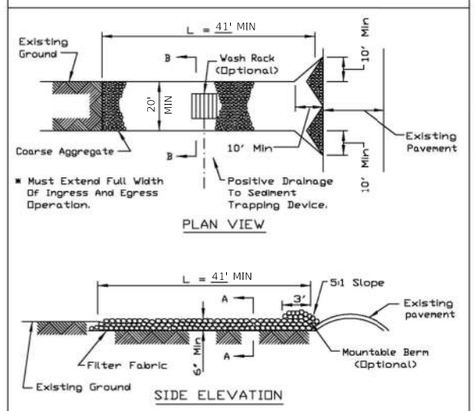

NOTES:
1. Filter fabric shall meet the requirements of material specification 592 GEOTEXTILE, Table I or 2, Class I, II or IV and shall be placed over the cleared area prior to the placing of rock.
2. Rock or reclaimed concrete shall meet one of the following IDOT coarse aggregate gradation, CA-1, CA-2, CA-3 or CA-4 and be placed according to construction specification 25 ROCKFILL using placement Method 1 and Class III compaction.
3. Any drainage facilities required because of washing shall be constructed according to manufacturers specifications.
4. If wash racks are used they shall be installed according to the manufacturer's specifications.

REFERENCE
Project
Designed Date
Checked Date
Approved Date

NRCS Natural Resources Conservation Service

STANDARD DWG. NO. IL-630
SHEET 1 OF 2
DATE 8-18-94

STABILIZED CONSTRUCTION ENTRANCE PLAN

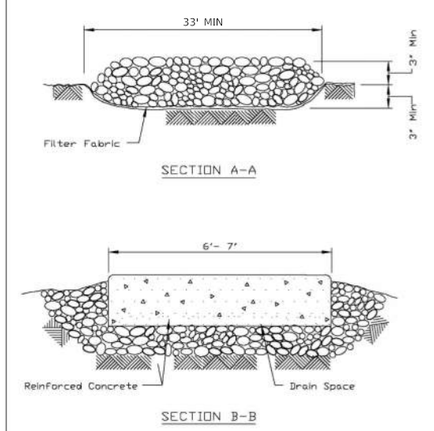

REFERENCE
Project
Designed Date
Checked Date
Approved Date

NRCS Natural Resources Conservation Service

STANDARD DWG. NO. IL-630
SHEET 2 OF 2
DATE 8-18-94

MODEL: Default
FILE NAME: pw:\\ts-pwfn01a-ic.transystcorp.com:transystcorp-pw1\Documents\Projects_2021\CI401 - CHicago\P401210087 - Streamwood - Pedestrian Bridge over IL 59 - Phase II\393.00 - Roadway\393.01 - Standard Sheets\09 Erosion and Sediment Control Plan\General Notes Erosion

TRANSYSTEMS

USER NAME = lmnainggolan	DESIGNED -	REVISED -	
	DRAWN -	REVISED -	
PLOT SCALE = 2.0000 ' / in.	CHECKED -	REVISED -	
PLOT DATE = 5/23/2023	DATE -	REVISED -	

STATE OF ILLINOIS
DEPARTMENT OF TRANSPORTATION

IL 59 PEDESTRIAN OVERPASS
EROSION AND SEDIMENT CONTROL GENERAL NOTES

SCALE: SHEET 1 OF 6 SHEETS STA. TO STA.

F.A.U RTE.	SECTION	COUNTY	TOTAL SHEETS	SHEET NO.
338	21-00067-00-BR	COOK	90	22
		CONTRACT NO. 61J67		
	ILLINOIS	FED. AID PROJECT		

SUPER SILT FENCE

ELEVATION

FABRIC ANCHOR DETAIL

NOTES
1. PAID PER FOOT FOR PERIMETER EROSION BARRIER.
2. EACH FOOT OF SUPER SILT FENCE EQUALS 2 FEET OF PERIMETER EROSION BARRIER.
3. THE POSTS SHALL BE A MINIMUM OF 4 FEET LONG.

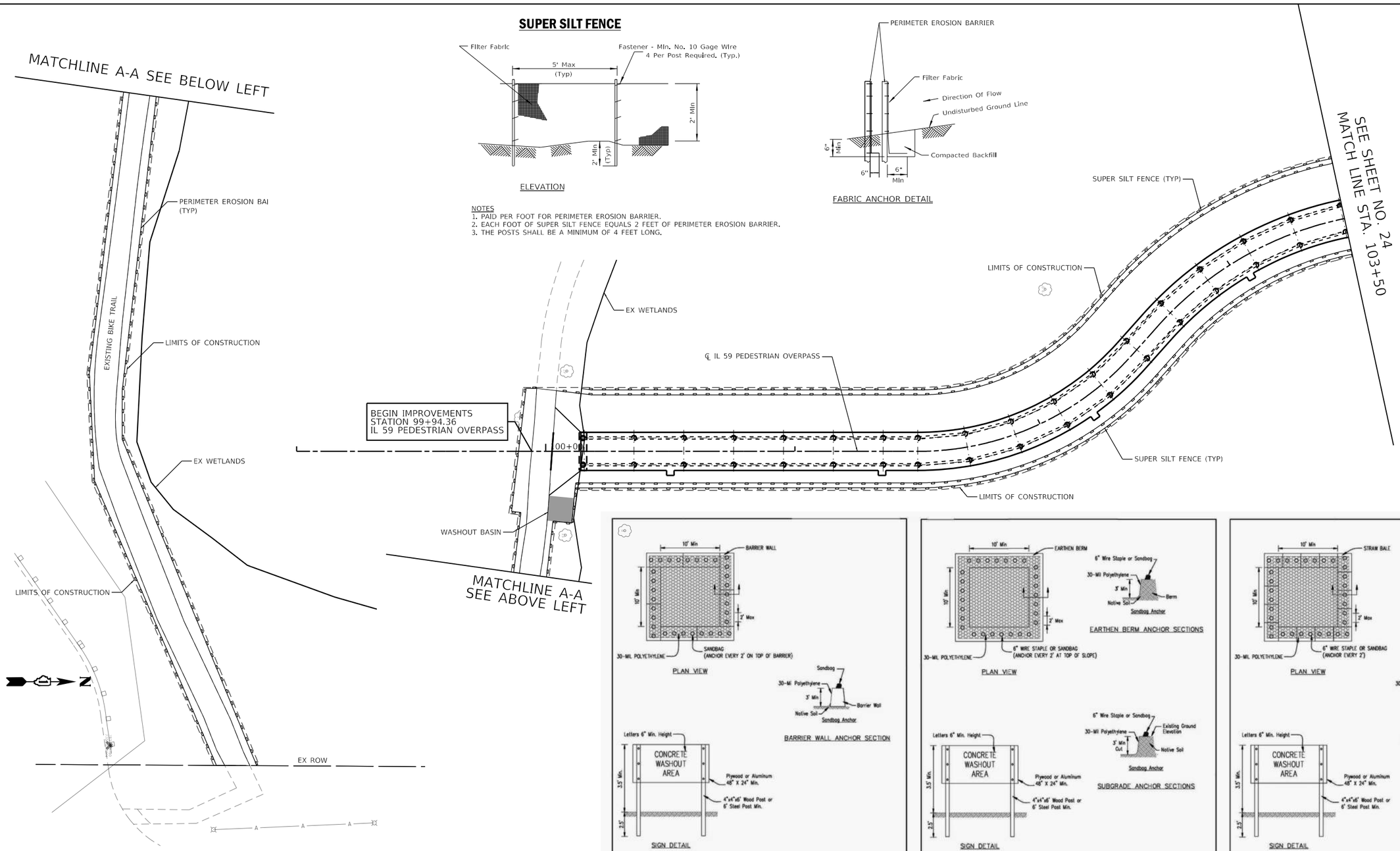

LEGEND

PERIMETER EROSION BARRIER

WASHOUT BASIN

0 20 40 60
SCALE IN FEET

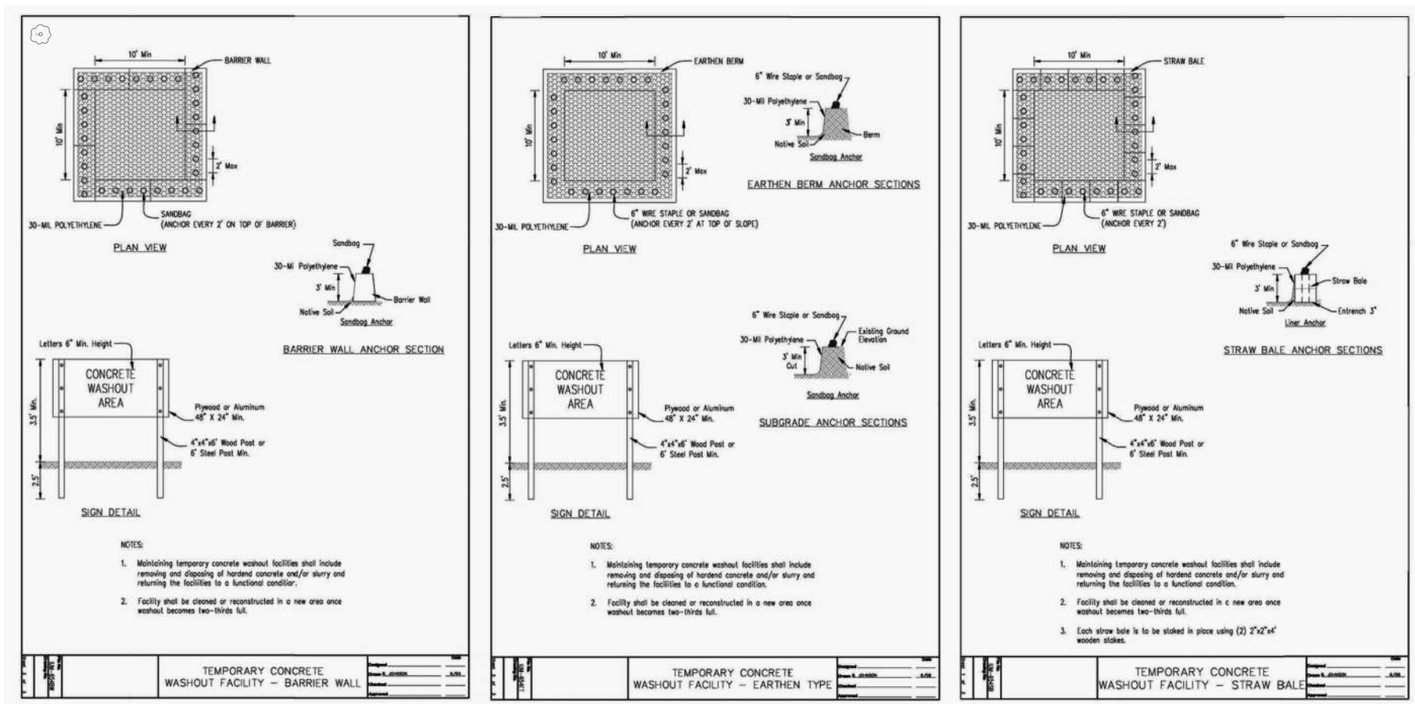

ALL WASHOUT DESIGNS PAID FOR AS "WASHOUT BASIN"

MODEL: Default
FILE NAME: pw:\\bs-pwint01.a-e.transystems.com:transyscorp-pw1\Documents\Projects 2021\CH401 - CHCago\P401210087 - Streamwood - Pedestrian Bridge over IL 59 - Phase II\303.00 - Road\303.01 - Standard Sheets\09 Erosion and Sediment Control Plan\Erosion and Sediment

TRANSYSTEMS

USER NAME = tmnainggolan	DESIGNED - XXXX	REVISED -	
	DRAWN - XXXX	REVISED -	
PLOT SCALE = 40.0000 ' / in.	CHECKED - XXXX	REVISED -	
PLOT DATE = 5/23/2023	DATE - XXXX	REVISED -	

STATE OF ILLINOIS
DEPARTMENT OF TRANSPORTATION

IL 59 PEDESTRIAN OVERPASS
EROSION AND SEDIMENT CONTROL PLANS

SCALE: 1"=20' | SHEET 2 OF 6 SHEETS | STA. 99+94.36 TO STA. 103+50.00

F.A.U RTE.	SECTION	COUNTY	TOTAL SHEETS	SHEET NO.
338	21-00067-00-BR	COOK	90	23
		CONTRACT NO. 61J67		
		ILLINOIS	FED. AID PROJECT	

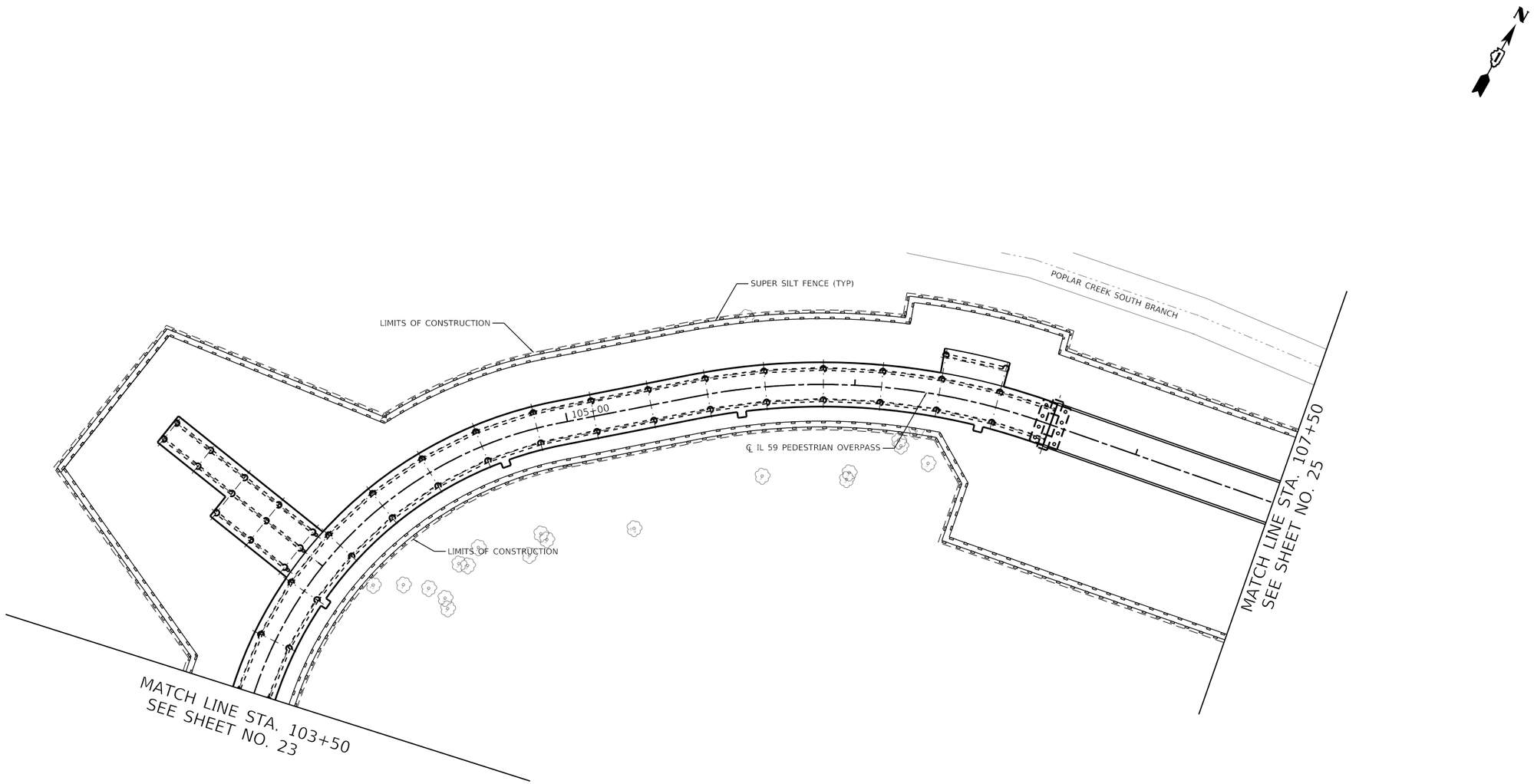

LEGEND

PERIMETER EROSION BARRIER

0 20 40 60
SCALE IN FEET

MODEL: Default
FILE NAME: pw:\\ts-pwint01.a-ec.transystems.com:transystems-pw1\Documents\Projects_2021\CH401 - Chicago\P40121 0087 - Streamwood - Pedestrian Bridge over IL 59 - Phase II\303.00 - Roadway\303.01 - Standard Sheets\09 Erosion and Sediment Control Plan\Erosion and Sediment

TRANSYSTEMS

USER NAME = lmnainggolan	DESIGNED - XXXX	REVISED -	
	DRAWN - XXXX	REVISED -	
PLOT SCALE = 40.0000 ' / in.	CHECKED - XXXX	REVISED -	
PLOT DATE = 5/23/2023	DATE - XXXX	REVISED -	

STATE OF ILLINOIS
DEPARTMENT OF TRANSPORTATION

IL 59 PEDESTRIAN OVERPASS
EROSION AND SEDIMENT CONTROL PLANS

SCALE: 1"=20' | SHEET 3 OF 6 SHEETS | STA. 103+50 TO STA. 107+50

F.A.U RTE.	SECTION	COUNTY	TOTAL SHEETS	SHEET NO.
338	21-00067-00-BR	COOK	90	24
		CONTRACT NO. 61J67		
	ILLINOIS	FED. AID PROJECT		

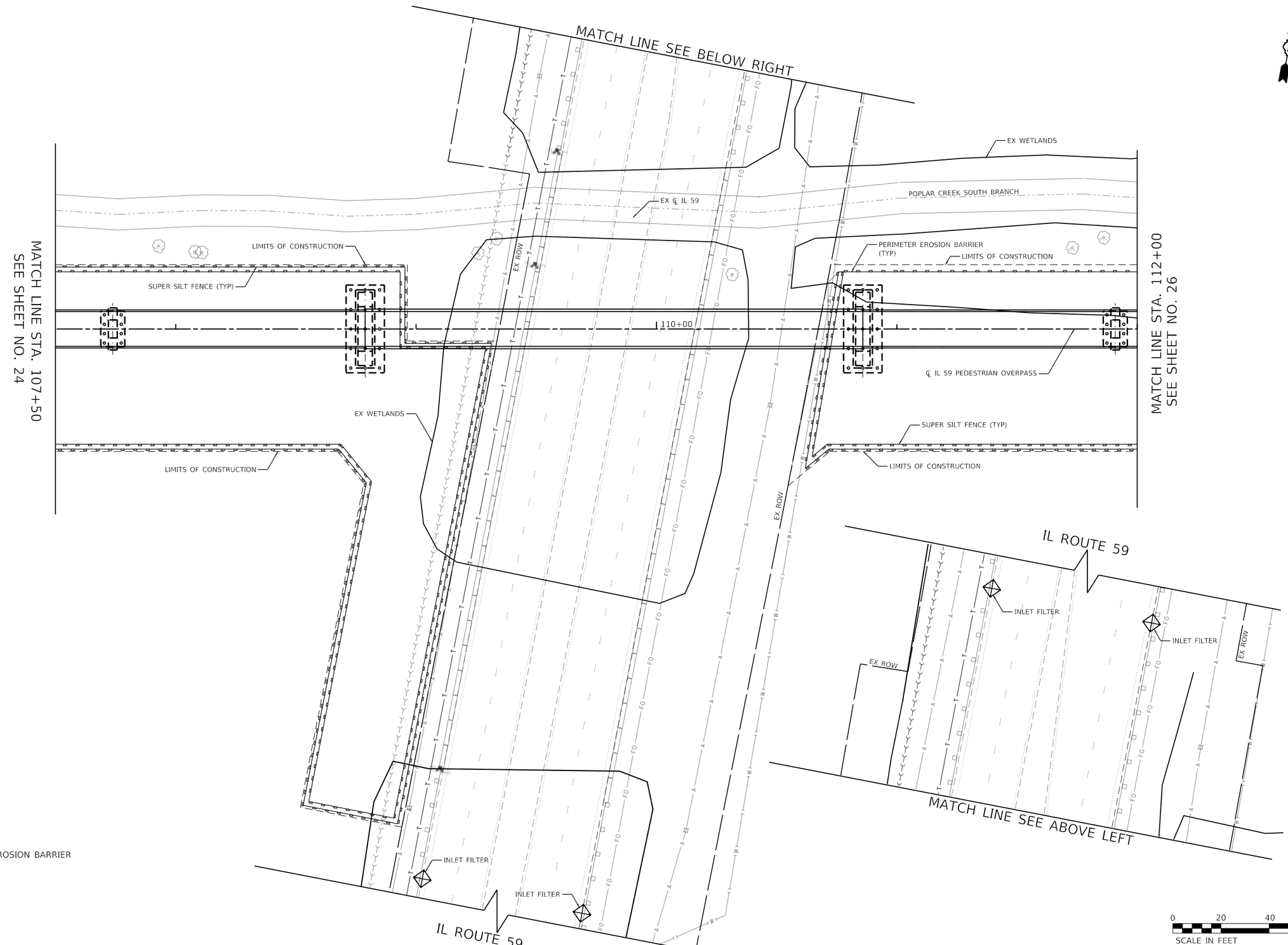

LEGEND

PERIMETER EROSION BARRIER

INLET FILTER

MODEL: Default
FILE NAME: pw:\\hc-pwint01.a-e.transyscorp.com:transyscorp-pw1\Documents\Projects_2021\CH401 - CNCorp\P401210087 - Streamwood - Pedestrian Bridge over IL 59 - Phase II\303.00 - Roadway\303.01 - Standard Sheets\09 Erosion and Sedimentation Control Plan\Erosion and Sediment

TRANSYSTEMS

USER NAME = lmnainggolan	DESIGNED - XXXX	REVISED -	
	DRAWN - XXXX	REVISED -	
PLOT SCALE = 40.0000 ' / in.	CHECKED - XXXX	REVISED -	
PLOT DATE = 5/23/2023	DATE - XXXX	REVISED -	

STATE OF ILLINOIS
DEPARTMENT OF TRANSPORTATION

IL 59 PEDESTRIAN OVERPASS
EROSION AND SEDIMENT CONTROL PLANS

SCALE: 1"=20' | SHEET 4 OF 6 SHEETS | STA. 107+50 TO STA. 112+00

F.A.U RTE.	SECTION	COUNTY	TOTAL SHEETS	SHEET NO.
338	21-00067-00-BR	COOK	90	25

CONTRACT NO. 61J67

ILLINOIS | FED. AID PROJECT

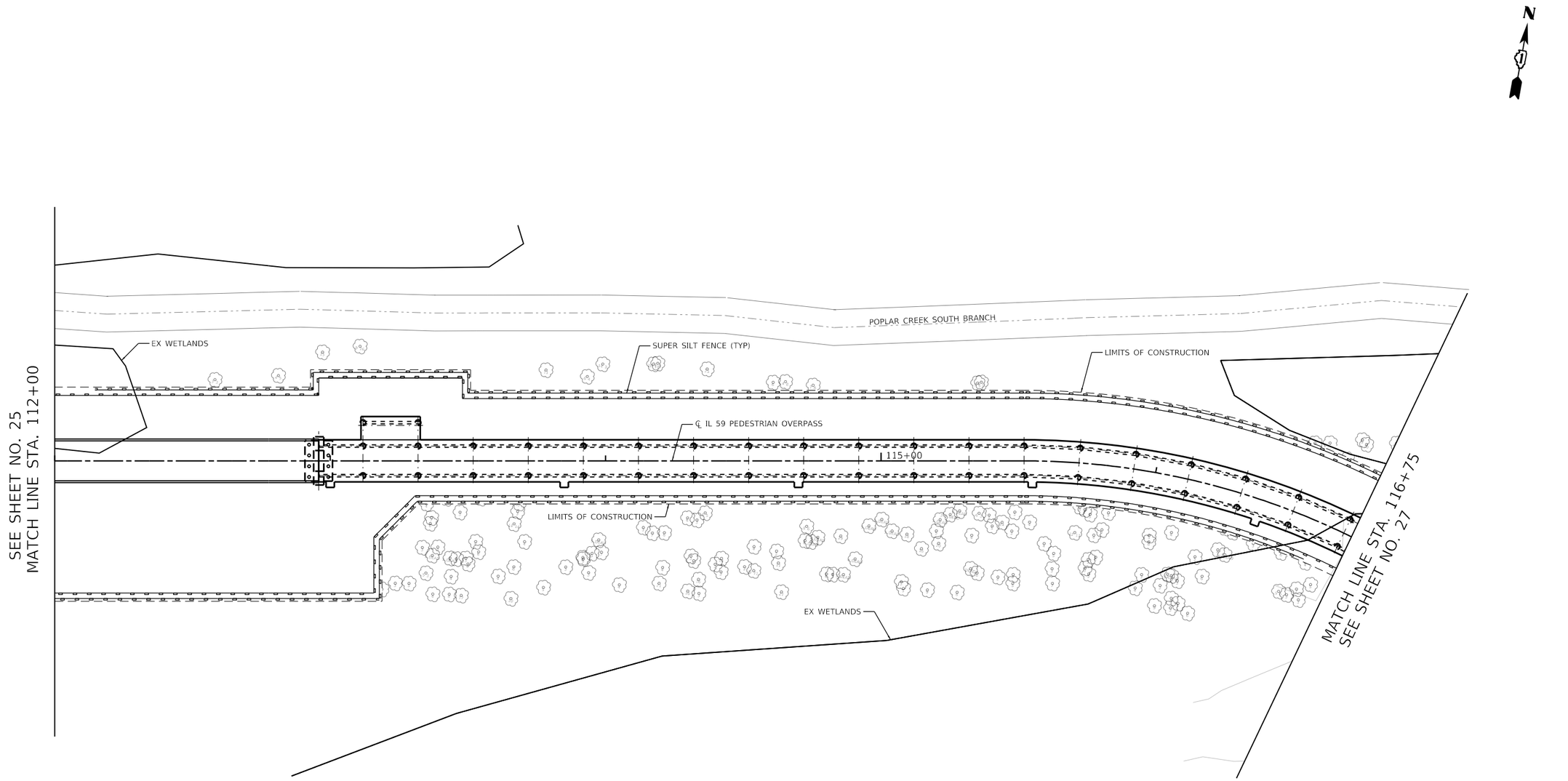

LEGEND

PERIMETER EROSION BARRIER

0 20 40 60
SCALE IN FEET

MODEL: Default
FILE NAME: pw:\\ts-pwint01-a-e.transyscorp.com:transyscorp-pw10Documents\Projects_2021\CH401 - Chicago\P401210087 - Streamwood - Pedestrian Bridge over IL 59 - Phase II\303.00 - Round\303.01 - Standard Sheets\09 Erosion and Sediment Control Plan\Erosion and Sediment

TRANSYSTEMS

USER NAME = lmnainggolan	DESIGNED - XXXX	REVISED -	
	DRAWN - XXXX	REVISED -	
PLOT SCALE = 40.0000 ' / in.	CHECKED - XXXX	REVISED -	
PLOT DATE = 5/23/2023	DATE - XXXX	REVISED -	

STATE OF ILLINOIS
DEPARTMENT OF TRANSPORTATION

IL 59 PEDESTRIAN OVERPASS
EROSION AND SEDIMENT CONTROL PLANS

SCALE: 1"=20' | SHEET 5 OF 6 SHEETS | STA. 112+00 TO STA. 116+75

F.A.U RTE.	SECTION	COUNTY	TOTAL SHEETS	SHEET NO.
338	21-00067-00-BR	COOK	90	26

CONTRACT NO. 61J67

ILLINOIS | FED. AID PROJECT

SEE SHEET NO. 26
MATCH LINE STA. 116+75

EX WETLANDS

EX WETLANDS

SUPER SILT FENCE (TYP)

AGGREGATE DITCH CHECK (TYP)

TEMPORARY DITCH CHECK (TYP)

POPLAR CREEK SOUTH BRANCH

LIMITS OF CONSTRUCTION

℄ IL 59 PEDESTRIAN OVERPASS

120+00

WASHOUT BASIN

PERIMETER EROSION BARRIER (TYP)

END IMPROVEMENTS
STATION 122+66.71
IL 59 PEDESTRIAN OVERPASS

MADISON DRIVE MULTI-USE PATH

LIMITS OF CONSTRUCTION

COMPENSATORY STORAGE FACILITY
SEE SHEET NO. 28

EX ROW

LEGEND

PERIMETER EROSION BARRIER

AGGREGATE DITCH CHECK

TEMPORARY DITCH CHECK

WASHOUT BASIN

0 20 40 60
SCALE IN FEET

MODEL: Default
FILE NAME: pw:\\ts-pwhn01.a-6.transyscorp.com:transyscorp-pw1\Documents\Projects_2021\CI401 - CHcsgo\P401210087 - Streamwood - Pedestrian Bridge over IL 59 - Phase II\303.00 - Roadway\303.01 - Standard Sheets\09 Erosion and Sediment Control Plan\Erosion and Sediment

TRANSYSTEMS

USER NAME = lmnainggolan	DESIGNED - XXXX	REVISED -	
	DRAWN - XXXX	REVISED -	
PLOT SCALE = 40.0000 ' / in.	CHECKED - XXXX	REVISED -	
PLOT DATE = 5/23/2023	DATE - XXXX	REVISED -	

STATE OF ILLINOIS
DEPARTMENT OF TRANSPORTATION

IL 59 PEDESTRIAN OVERPASS
EROSION AND SEDIMENT CONTROL PLANS

SCALE: 1"=20' | SHEET 6 OF 6 SHEETS | STA. 116+75 TO STA. 122+66.71

F.A.U RTE.	SECTION	COUNTY	TOTAL SHEETS	SHEET NO.
338	21-00067-00-BR	COOK	90	27
		CONTRACT NO. 61J67		
		ILLINOIS	FED. AID PROJECT	

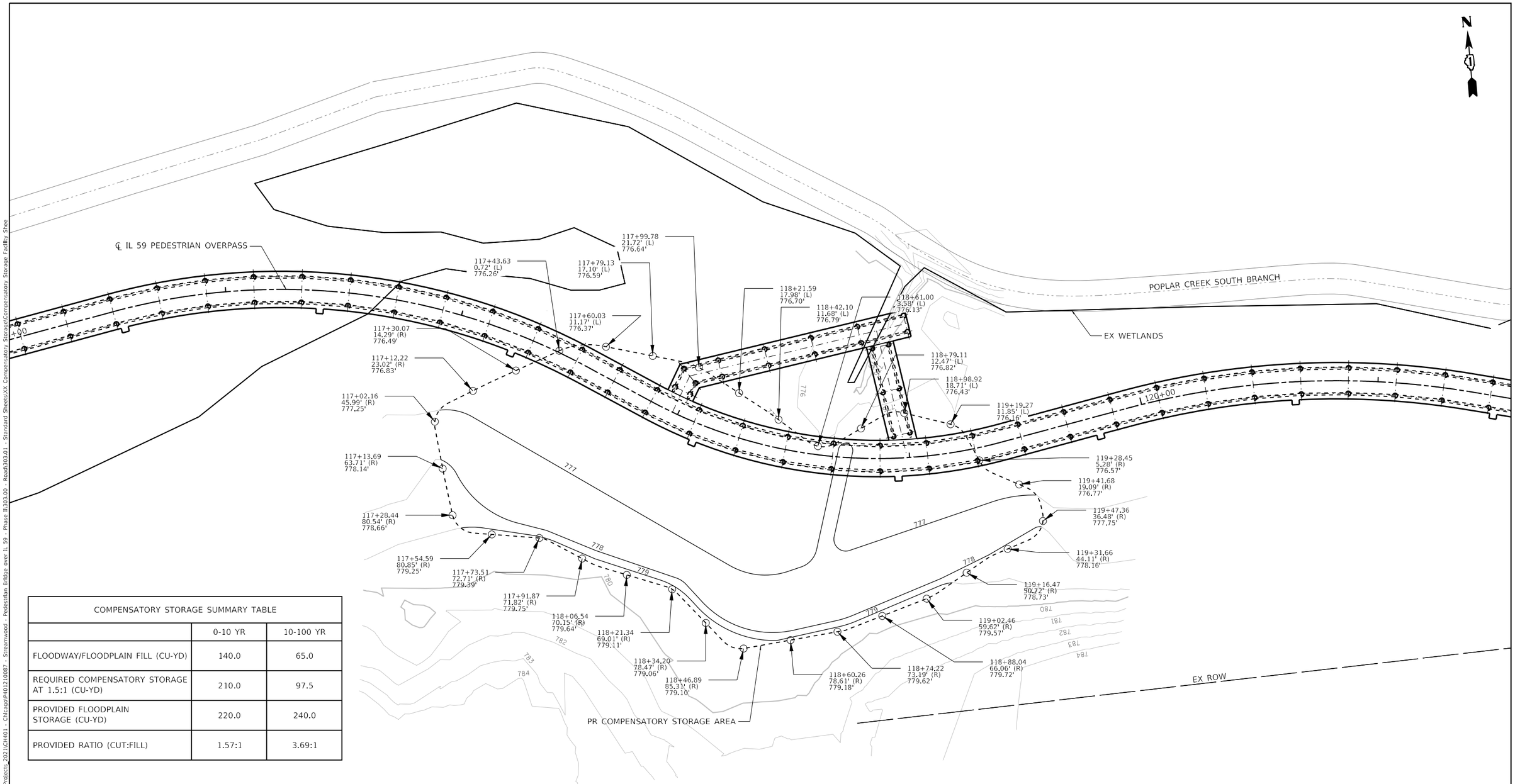

COMPENSATORY STORAGE SUMMARY TABLE		
	0-10 YR	10-100 YR
FLOODWAY/FLOODPLAIN FILL (CU-YD)	140.0	65.0
REQUIRED COMPENSATORY STORAGE AT 1.5:1 (CU-YD)	210.0	97.5
PROVIDED FLOODPLAIN STORAGE (CU-YD)	220.0	240.0
PROVIDED RATIO (CUT:FILL)	1.57:1	3.69:1

MODEL: Default
FILE NAME: pw:\\ts-pwint01-a-e.transyscorp.com:transyscorp-pw1\Documents\Projects_2021\CH401 - CHicago\P401210087 - Streamwood - Pedestrian Bridge over IL 59 - Phase II\303.00 - Roadway\303.01 - Standard Sheets\XX Compensatory Storage\Compensatory Storage Facility Shee

TRANSYSTEMS

USER NAME = tmnainggolan	DESIGNED - XXXX	REVISED -	
	DRAWN - XXXX	REVISED -	
PLOT SCALE = 40.0000 ' / in.	CHECKED - XXXX	REVISED -	
PLOT DATE = 5/24/2023	DATE - XXXX	REVISED -	

STATE OF ILLINOIS
DEPARTMENT OF TRANSPORTATION

IL 59 PEDESTRIAN OVERPASS
COMPENSATOR STORAGE FACILIT PLAN

SCALE: 1"=20' | SHEET 1 OF 1 SHEETS | STA. TO STA.

F.A.U RTE.	SECTION	COUNTY	TOTAL SHEETS	SHEET NO.
338	21-00067-00-BR	COOK	90	28
		CONTRACT NO. 61J67		
	ILLINOIS	FED. AID PROJECT		

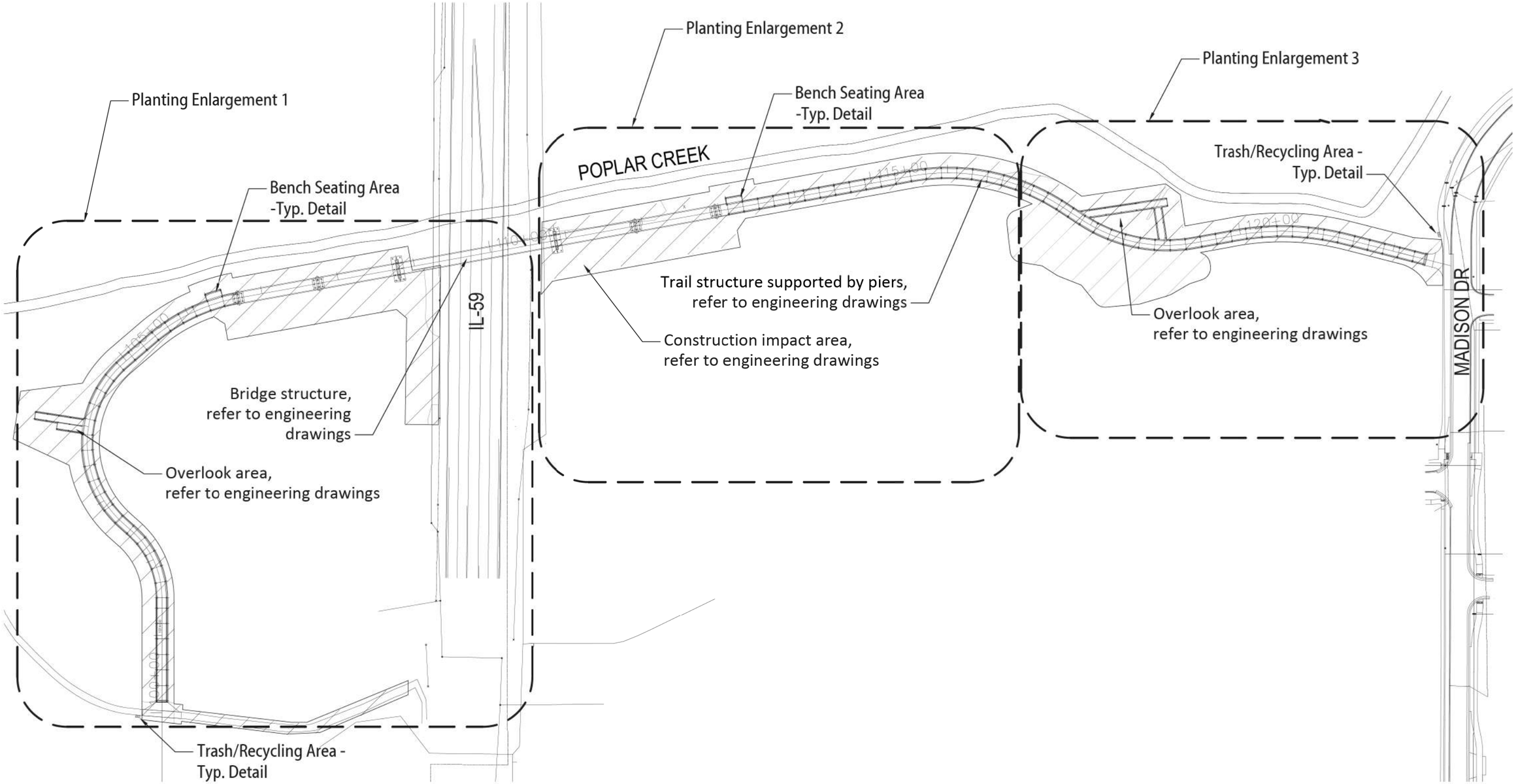

1 OVERALL LANDSCAPE PLAN

MODEL: Default
FILE NAME: pw:\\ts-pwln01-a-e.transyscorp.com:transyscorp-pw1\Documents\Projects_2021\CH401 - CHicago\P401210087 - Streamwood - Pedestrian Bridge over IL 59 - Phase II\303.00 - Road\303.01 - Standard Sheets\10 Landscaping Details\210087-SH1-LSCDET

teska

USER NAME = lmnainggolan	DESIGNED -	REVISED -	
	DRAWN -	REVISED -	
PLOT SCALE = 20.0000 ' / in.	CHECKED -	REVISED -	
PLOT DATE = 5/23/2023	DATE -	REVISED -	

STATE OF ILLINOIS
DEPARTMENT OF TRANSPORTATION

IL 59 PEDESTRIAN OVERPASS
OVERALL LANDSCAPE PLAN

SCALE: | SHEET 1 OF 5 SHEETS | STA. | TO STA.

F.A.U RTE.	SECTION	COUNTY	TOTAL SHEETS	SHEET NO.
338	21-00067-00-BR	COOK	90	29
		CONTRACT NO. 61J67		
		ILLINOIS	FED. AID PROJECT	

Seeding, Class 4B and 5B

Bench seating area

POPLAR CREEK

IL-59

Bridge structure,
refer to engineering
drawings

Trail structure supported by piers,
refer to engineering drawings

Refer to sheet L-102 for
tree planting information

Construction impact area

Overlook area,
refer to engineering drawings

Seeding, Class 4B and 5B

Matchline

Trash/Recycling Area -
Typ. Detail

Seeding, Class 1B
2' mow strip along north and south sides of existing pathway

LEGEND

- Existing tree to remain
- Existing tree to receive tree protection
- New tree
- Seeding, Class 1B
- Seeding, Class 4B and 5B

Note:
Refer to Engineering for tree removals

1 PLANTING ENLARGEMENT PLAN 1

N

MODEL: Default
FILE NAME: pw:\\he-pwint01.a-e.transyscorp.com:transyscorp-pw10\Documents\Projects_2021\CH401 - Chicago\P401210087 - Streamwood - Pedestrian Bridge over IL 59 - Phase II\303.00 - Round\303.01 - Standard Sheets\10 Landscaping Details\210087-SHT-LSCDET

teska

USER NAME = lmnainggolan	DESIGNED -	REVISED -	
	DRAWN -	REVISED -	
PLOT SCALE = 20.0000 ' / in.	CHECKED -	REVISED -	
PLOT DATE = 5/23/2023	DATE -	REVISED -	

STATE OF ILLINOIS
DEPARTMENT OF TRANSPORTATION

IL 59 PEDESTRIAN OVERPASS
PLANTING ENLARGEMENT PLAN 1

SCALE: | SHEET 2 OF 5 SHEETS | STA. TO STA.

F.A.U RTE.	SECTION	COUNTY	TOTAL SHEETS	SHEET NO.
338	21-00067-00-BR	COOK	90	30
		CONTRACT NO. 61J67		
	ILLINOIS	FED. AID PROJECT		

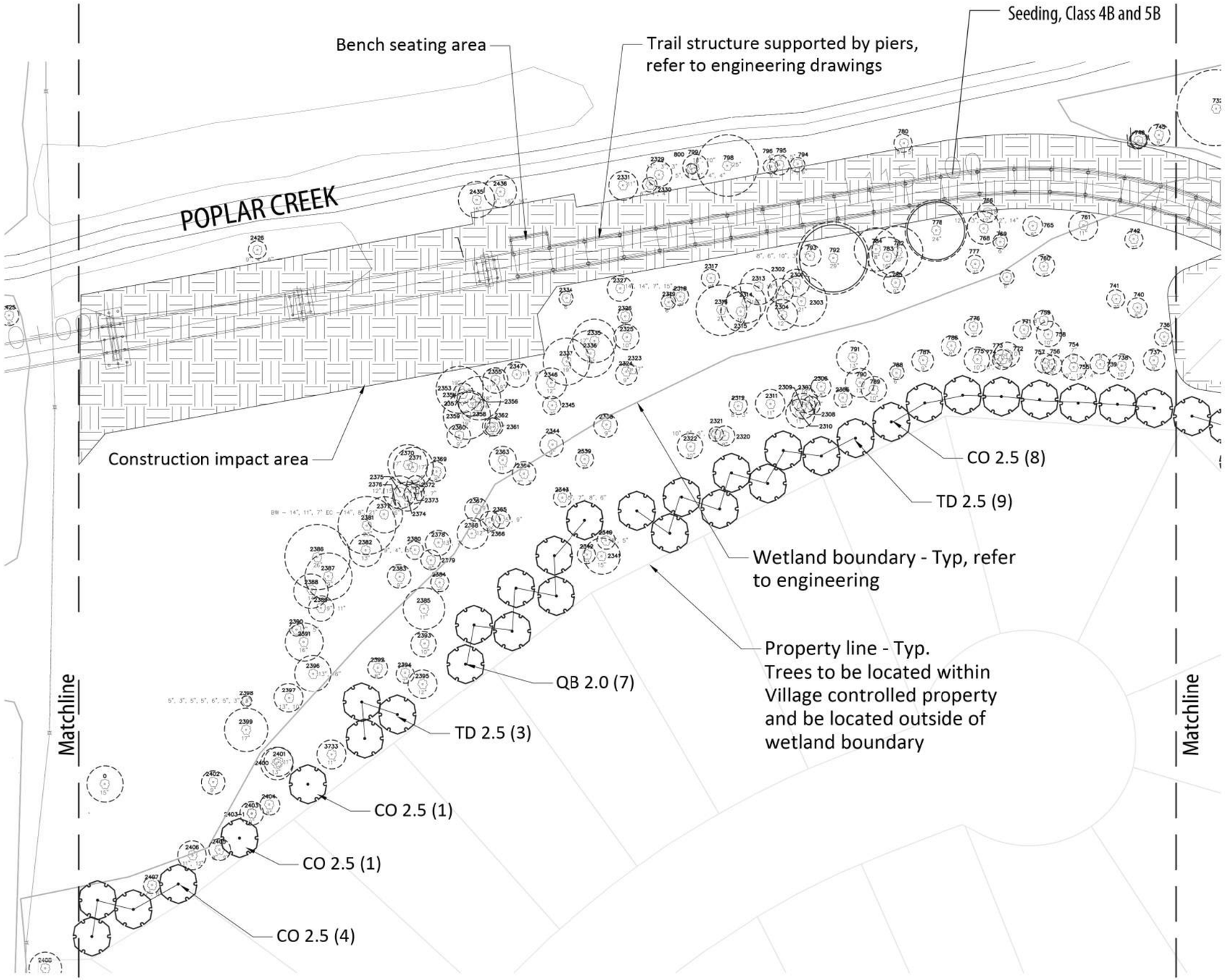

LEGEND

- Existing tree to remain
- Existing tree to receive tree protection
- New tree
- Seeding, Class 4B and 5B

Note:
Refer to Engineering for tree removals

New tree planting species and final locations shall be coordinated with Village staff prior to installation.

N

1 PLANTING ENLARGEMENT PLAN 2

MODEL: Default
FILE NAME: pw:\\bc-pwint01-a-b.transystcorp.com:transystcorp-pw11\Documents\Projects_2021\CI401 - Chicago\P401210087 - Streamwood - Pedestrian Bridge over IL 59 - Phase II\303.00 - Roadway\303.01 - Standard Sheets\10 Landscaping Details\210087-SH1-LSCDET

teska

USER NAME = lmnainggolan	DESIGNED -	REVISED -	
	DRAWN -	REVISED -	
PLOT SCALE = 20.0000 ' / in.	CHECKED -	REVISED -	
PLOT DATE = 5/23/2023	DATE -	REVISED -	

STATE OF ILLINOIS
DEPARTMENT OF TRANSPORTATION

IL 59 PEDESTRIAN OVERPASS
PLANTING ENLARGEMENT PLAN 2

SCALE: | SHEET 3 OF 5 SHEETS | STA. TO STA.

F.A.U RTE.	SECTION	COUNTY	TOTAL SHEETS	SHEET NO.
338	21-00067-00-BR	COOK	90	31
		CONTRACT NO. 61J67		
		ILLINOIS FED. AID PROJECT		

Wetland boundary - Typ, refer to engineering

Overlook area, refer to engineering drawings

Trail structure supported by piers, refer to engineering drawings

Construction impact area

Trash / recycling area, typical detail

Seeding, Class 1B adjacent to at grade pathway transition

POPLAR CREEK

MADISON DR

Matchline

QB 2.0 (9)

CC 2.5 (10)

TD 2.5 (8)

TD 2.5 (5)

Property line - Typ.
Trees to be located within Village controlled property and be located outside of wetland boundary

LEGEND

- Existing tree to remain
- Existing tree to receive tree protection
- New tree
- Seeding, Class 4B
- Seeding, Class 4B and 5B

Note:
Refer to Engineering for tree removals

New tree planting species and final locations shall be coordinated with Village staff prior to installation.

1 PLANTING ENLARGEMENT PLAN 3

N

MODEL: Default
FILE NAME: pw:\\ne-pwfn01.a-e.transyscorp.com:transyscorp-pw10Documents\Projects_2021\CH401 - CHicagoP401210087 - Streamwood - Pedestrian Bridge over IL 59 - Phase II\303.00 - Round\303.01 - Standard Sheets\10 Landscaping Details\210087-SH1-LSCDET

teska

USER NAME = lmnainggolan	DESIGNED -	REVISED -	
	DRAWN -	REVISED -	
PLOT SCALE = 20.0000 ' / in.	CHECKED -	REVISED -	
PLOT DATE = 5/23/2023	DATE -	REVISED -	

STATE OF ILLINOIS
DEPARTMENT OF TRANSPORTATION

IL 59 PEDESTRIAN OVERPASS
PLANTING ENLARGEMENT PLAN 3

SCALE: | SHEET 4 OF 5 SHEETS | STA. TO STA.

F.A.U RTE.	SECTION	COUNTY	TOTAL SHEETS	SHEET NO.
338	21-00067-00-BR	COOK	90	32
		CONTRACT NO. 61J67		
	ILLINOIS	FED. AID PROJECT		

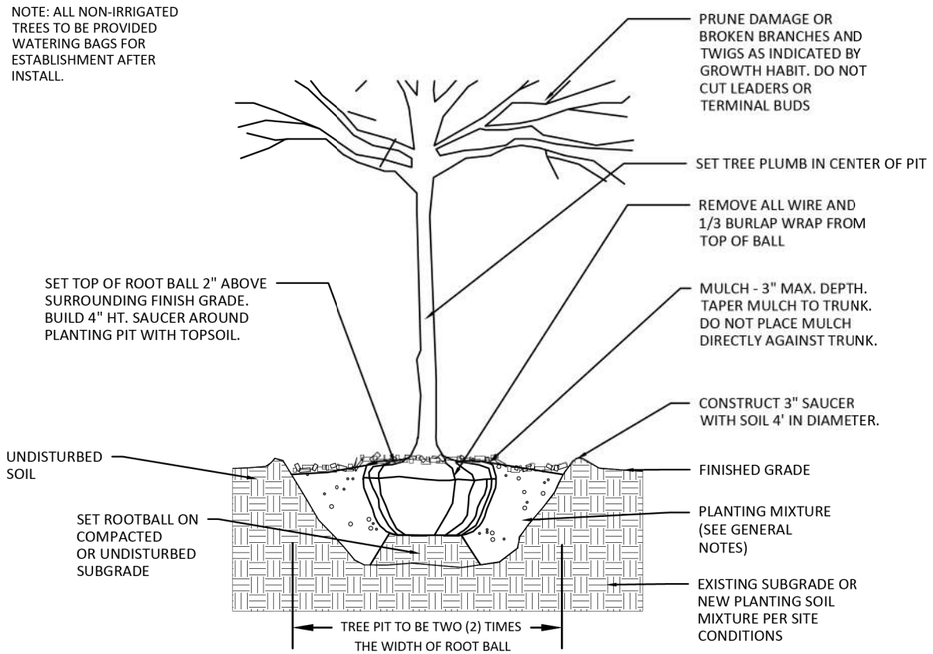

1 TYP. DECIDUOUS TREE PLANTING DETAIL

Plant List

SYMBOL	SPECIES, SIZE	QUANTITY
TD 2.5	TREE, TAXODIUM DISTICHUM (COMMON BALD CYPRESS), 2-1/2" CALIPER, BALLED AND BURLAPPED	25
QB 2.0	TREE, QUERCUS BICOLOR (SWAMP WHITE OAK), 2" CALIPER, BALLED AND BURLAPPED	16
CC 2.5	TREE, CARPINUS CAROLINIANA (AMERICAN HORNBEAM), 2-1/2" CALIPER, BALLED AND BURLAPPED	10
CO 2.5	TREE, CELTIS OCCIDENTALIS (COMMON HACKBERRY), 2-1/2" CALIPER, BALLED AND BURLAPPED	14

Seeding Mix List

TYPE	AREA
Seeding, Class 1B	3,506 SF
Seeding, Class 4B	139,038 SF
Seeding, Class 5B	119,611 SF

LANDSCAPE GENERAL NOTES:

1. PRIOR TO COMMENCEMENT OF ANY CONSTRUCTION ACTIVITIES, CONTRACTOR SHALL NOTIFY J.U.L.I.E. (811) OR (800) 892.0123 TO DETERMINE THE LOCATION OF ANY UNDERGROUND UTILITIES, WHICH MAY AFFECT PROPOSED SITE WORK. CONTRACTOR SHALL NOTIFY THE OWNER/LANDSCAPE ARCHITECT IMMEDIATELY OF ANY DISCREPANCIES, OBSTACLES AND/OR PROBLEMS.

2. VERIFICATION OF DIMENSIONS AND GRADES, BOTH EXISTING AND PROPOSED, SHALL BE THE CONTRACTOR'S RESPONSIBILITY PRIOR TO COMMENCEMENT OF WORK. THE CONTRACTOR SHALL NOTIFY THE OWNER/LANDSCAPE ARCHITECT OF ANY DISCREPANCIES.

3. ALL SURFACE DRAINAGE SHALL BE DIRECTED AWAY FROM STRUCTURES. SURFACE DRAINAGE SHALL BE DIRECTED TO EXISTING CATCH BASINS DESIGNATED FOR THE COLLECTION OF SURFACE RUN-OFF.

4. PLANT MATERIAL SIZES SHOWN ON PLANT SCHEDULE ARE MINIMUM ACCEPTABLE SIZES. ALL PLANT MATERIAL SHALL BE OF SPECIMEN QUALITY. NO 'PARK GRADE' MATERIAL WILL BE ACCEPTED.

5. ALL PLANT MATERIAL SHALL BE OBTAINED FROM AN APPROVED NORTHERN ILLINOIS NURSERY WITH HEAVY CLAY SOILS.

6. ALL PLANT MATERIAL SHALL CONFORM TO AMERICAN STANDARD FOR NURSERY STOCK AS SPONSORED BY THE AMERICAN ASSOCIATION OF NURSERYMEN AND APPROVED BY THE AMERICAN NATIONAL STANDARDS INSTITUTE, INC. (ANSI)

7. IF SPECIFIED SPECIES AND/ OR QUALITY OF PLANTS ARE NOT AVAILABLE AT THE TIME OF ORDERING, THE LANDSCAPE ARCHITECT AND/OR VILLAGE, AT HIS/HER DISCRETION, MAY SUBSTITUTE SIMILAR PLANTS WITH THE SAME WHOLESALE VALUE.

8. ALL PLANTS TO BE BALLED IN BURLAP (B&B). ALL NYLON/PLASTIC/BURLAP ROOT WRAPPING MATERIAL AND METAL WIRE BASKETS SHALL BE REMOVED.

9. SOIL TO BE USED FOR THE PLANTING MEDIUM FOR THE PROJECT SHALL BE FERTILE, WELL-DRAINED, OF UNIFORM QUALITY, FREE OF STONES OVER 1" IN DIAMETER, STICKS, OILS, CHEMICALS, PLASTER, CONCRETE AND OTHER DELETERIOUS MATERIAL.

10. ALL LANDSCAPE MATERIALS SHALL BE INSTALLED IN ACCORDANCE WITH ALL APPLICABLE CODES AND ORDINANCES.

11. ALL LANDSCAPE MATERIALS SHALL BE INSTALLED IN CONFORMANCE WITH THE ACCEPTED INDUSTRY'S STANDARD 'BEST MANAGEMENT PRACTICE' TECHNIQUES AS IDENTIFIED BY THE ILLINOIS LANDSCAPE CONTRACTORS ASSOCIATION (ILCA).

12. THE VILLAGE AND/OR LANDSCAPE ARCHITECT RESERVES THE RIGHT TO REJECT ANY PLANT MATERIAL IN POOR CONDITION/FORM OR NOT INSTALLED ACCORDING TO 'BEST MANAGEMENT PRACTICE' TECHNIQUES.

13. THE LANDSCAPE CONTRACTOR SHALL PREPARE PLANTING BEDS BY ADDING SOIL AMENDMENTS TO TOPSOIL MIX IN THE FOLLOWING QUANTITIES: TOPSOIL MIX FOR TREES SHALL BE THREE (3) PARTS TOPSOIL, ONE (1) PART PEAT, AND ONE (1) PART SAND.

14. ALL WOODY PLANTINGS TO RECEIVE 3" OF SHREDDED HARDWOOD MULCH.

15. CONTRACTOR SHALL WATER PLANTS IMMEDIATELY AFTER PLANTING. FLOODING PLANTS TWICE DURING FIRST TWENTY-FOUR HOURS AFTER PLANTING.

16. ALL ROAD AND WALK SURFACES SHALL BE KEPT CLEAR OF MUD AND DEBRIS AT ALL TIMES.

17. CONTRACTOR SHALL REPAIR IN KIND ANY AREAS DAMAGED AS A RESULT OF LANDSCAPE OPERATIONS.

18. GUARANTEE SPECIFICATIONS ARE AS FOLLOWS: THE CONTRACTOR SHALL PROVIDE THE OWNER WITH A BONDED WRITTEN ONE-YEAR WARRANTY AGREEMENT BEGINNING ON THE FIRST DAY OF THE OWNER'S POSSESSION. THIS AGREEMENT SHALL PROVIDE FOR THE REPLACEMENT OF DEAD OR DYING PLANT MATERIAL. THE CONTRACTOR SHALL PROVIDE THE OWNER WITH A TYPEWRITTEN LIST OF SPECIFIC MAINTENANCE INSTRUCTIONS FOR EACH TYPE OF PLANT INSTALLED WITH THE WRITTEN AGREEMENT AND BOND.

19. EROSION CONTROL BLANKETS REQUIRED ON ALL SLOPES GREATER THAN 3:1.

20. CONTRACTOR SHALL COORDINATE TREE REMOVALS, NEW TREE SPECIES AND NEW TREE INSTALLATION LOCATIONS WITH THE VILLAGE PRIOR TO PURCHASE AND INSTALLATION.

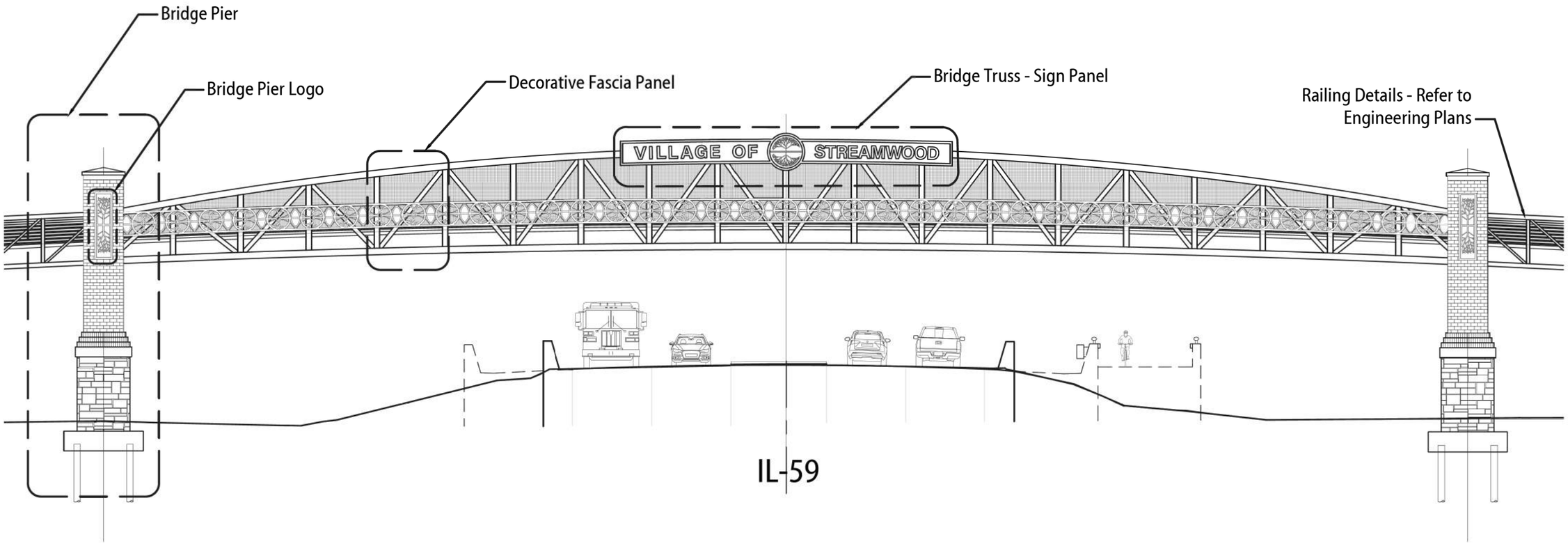

1 OVERALL BRIDGE ELEVATION

Refer to Engineering Drawings for Bridge Structural, Lighting, and Civil Design Plans

MODEL: Default
FILE NAME: pw:\\ne-pwfn01.a-e.transyscorp.com:transyscorp-pw1\Documents\Projects_2021\CH401 - Chicago\P401210087 - Streamwood - Pedestrian Bridge over IL 59 - Phase II\303.00 - Road\303.01 - Standard Sheets\10 Landscaping Details\210087-SHT-LSCDET

teska

USER NAME = lmnainggolan	DESIGNED -	REVISED -	
	DRAWN -	REVISED -	
PLOT SCALE = 20.0000 ' / in.	CHECKED -	REVISED -	
PLOT DATE = 5/23/2023	DATE -	REVISED -	

STATE OF ILLINOIS
DEPARTMENT OF TRANSPORTATION

IL 59 PEDESTRIAN OVERPASS
OVERALL BRIDGE ELEVATION

SCALE: | SHEET 1 OF 6 SHEETS | STA. | TO STA.

F.A.U RTE.	SECTION	COUNTY	TOTAL SHEETS	SHEET NO.
338	21-00067-00-BR	COOK	90	34

CONTRACT NO. 61J67

ILLINOIS | FED. AID PROJECT

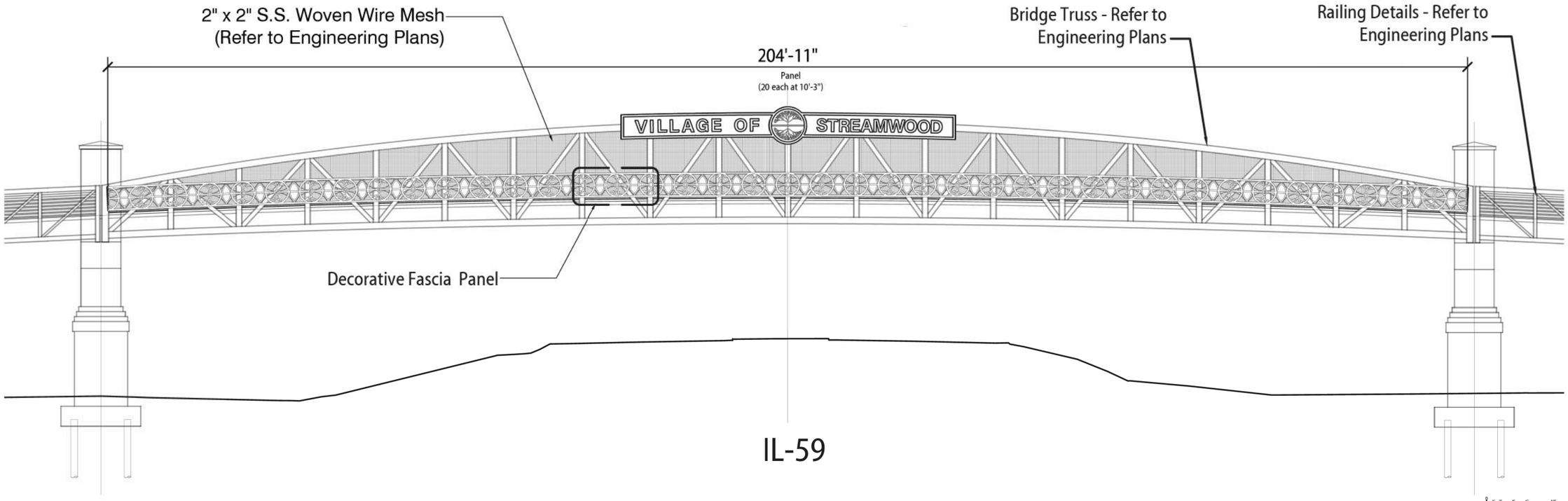

1 DECORATIVE FASCIA ELEVATION

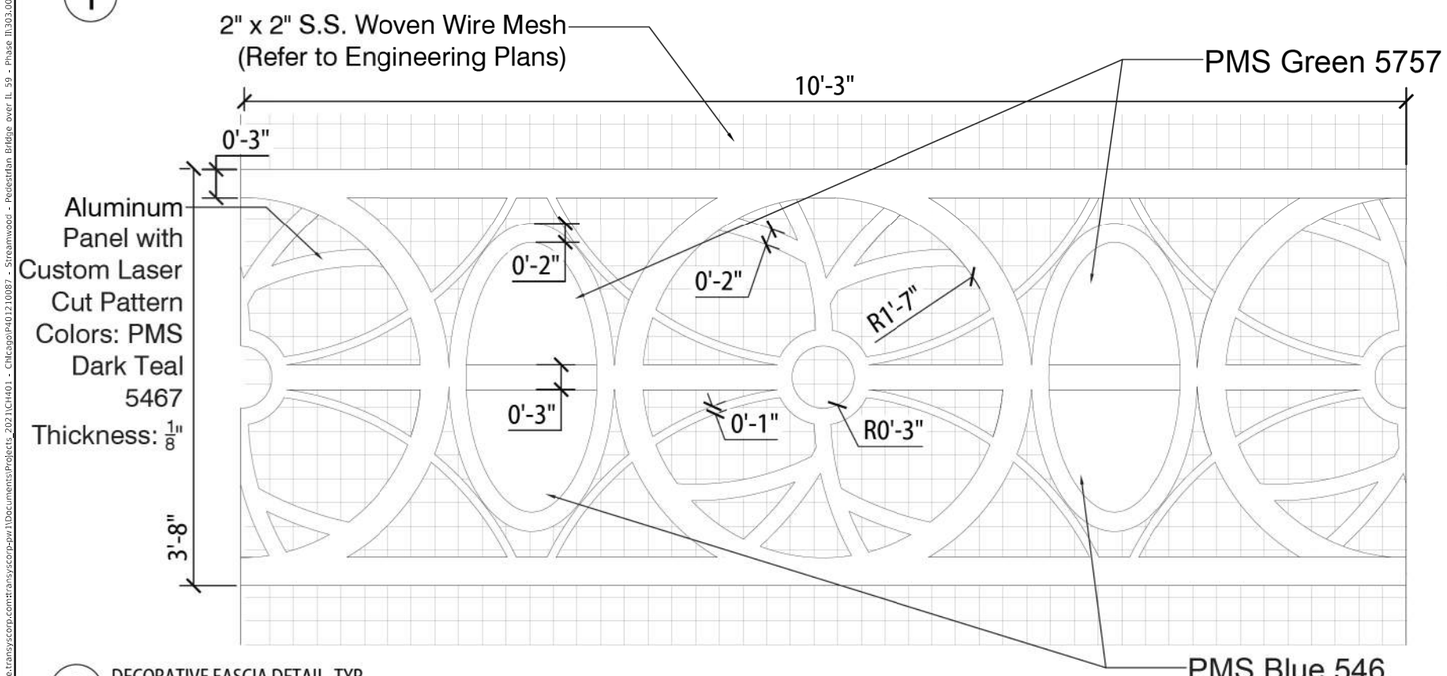

2 DECORATIVE FASCIA DETAIL, TYP.

DECORATIVE FASCIA - MATERIAL SCHEDULE

ITEM	MATERIAL	FINISH TREATMENT	FACE FEET (FF) PER FASCIA	# OF FASCIA ELEMENTS	TOTAL FACE FEET (FF)
BRIDGE TRUSS - DECORATIVE FASCIA (Occurs at North and South Elevation)	ALUMINUM METAL PANEL	CUSTOM LASER CUT SIGN PANEL WITH COLOR ACCENTS COLOR: TBD	738	2	1476

Refer to engineering documents for all structural, civil and electrical items.
Vector artwork is available for all custom features.
Contractor shall provide shop drawings for review and approval.
Contractor shall provide (3) color samples each for the specified green and blue colors at the decorative fascia for Village review and selection.

Contractor shall provide a mockup of the decorative fascia for village review and approval. mockup shall be 3'-8" HT x 8' -0" WD
If approved the mockup may become an article of the work.

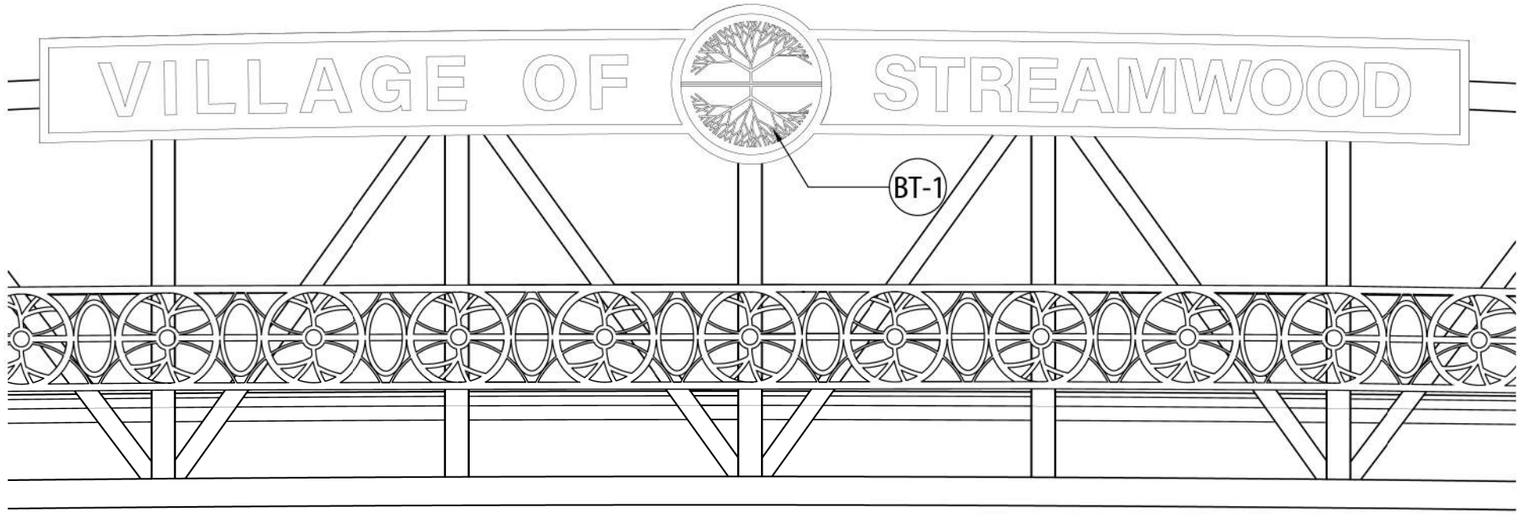

1 BRIDGE TRUSS- SIGN PANEL

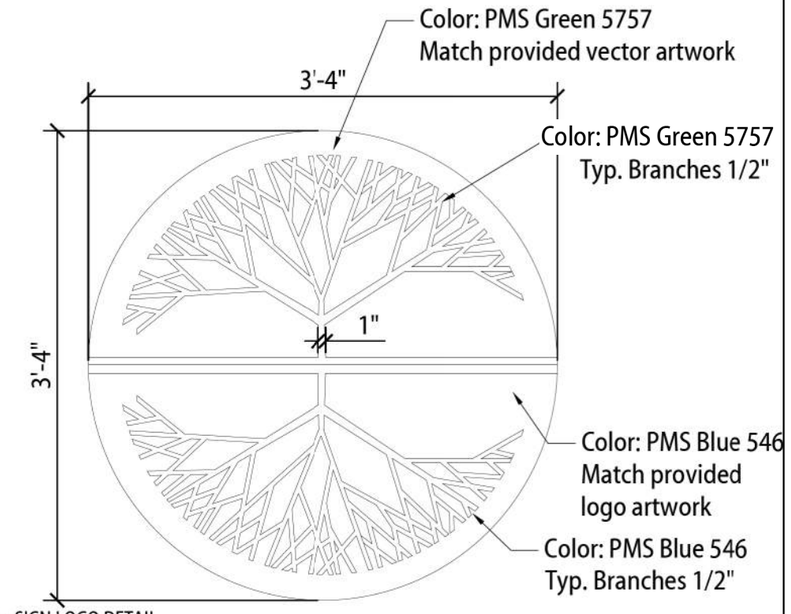

3 SIGN LOGO DETAIL

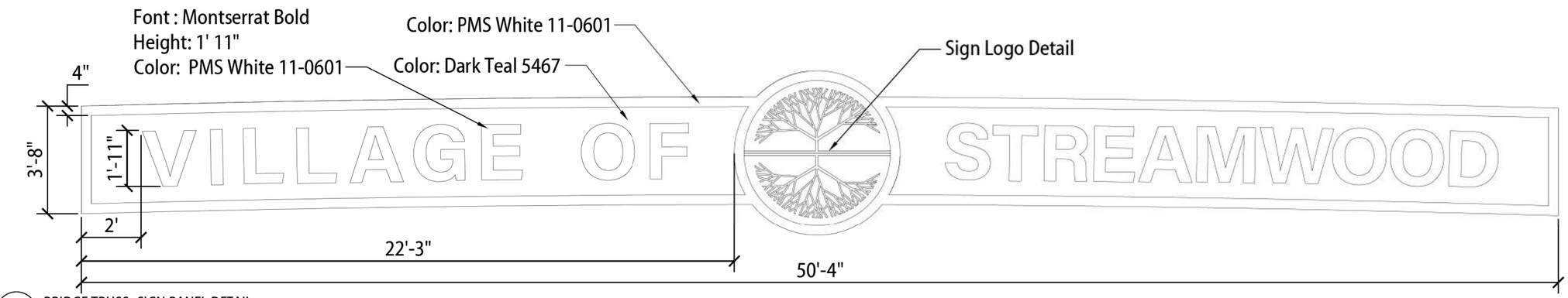

2 BRIDGE TRUSS- SIGN PANEL DETAIL

BRIDGE TRUSS SIGN PANEL - MATERIAL SCHEDULE						
SYMBOL	ITEM	MATERIAL	FINISH TREATMENT	FACE FEET PER SIGN (FF)	# 0F SIGNS	TOTAL FACE FEET (FF)
BT-1	BRIDGE TRUSS - SIGN PANEL (Occurs at North and South Elevation)	ALUMINUM METAL PANEL	CUSTOM PRINTED SIGN WITH DIMENSIONAL LETTERING COLORS: AS SHOWN	190	2	380

Refer to engineering documents for all structural, civil and electrical items.
Vector artwork is available for all custom features.
Contractor shall provide shop drawings for review and approval
Contractor shall provide (3) color and material samples from the manufacturer's standard offerings for each specified item for Village review and selection.
Mockups are required, refer to the specifications.
Contractor shall provide a mockup of the bridge truss sign for Village review and approval. mockup shall include at least one letter and the complete Village logo

Masonry 1539 - 2-5/8"x7-5/8" Sand Cast Brick

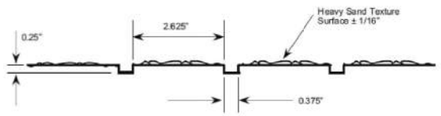

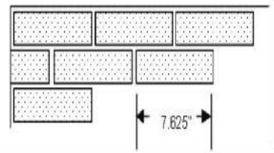

PHOTOGRAPH OF DESIRED SAND CAST BRICK COLOR BLEND
PROVIDE SAMPLES FOR REVIEW

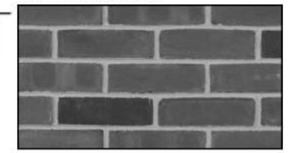

Stone 1266 - 2" Random Ashlar Stone

PHOTOGRAPH OF DESIRED RANDOM ASHLAR COLOR BLEND
PROVIDE SAMPLES FOR REVIEW

BRIDGE PIERS - MATERIAL SCHEDULE

SYMBOL	ITEM	MATERIAL	FINISH TREATMENT	FACE FEET (FF) PER PIER	# OF PIERS	TOTAL FACE FEET (FF)
BP-1	BRIDGE PIERS -BASE	CIP CONCRETE FORMLINER	COLOR: GREY BLEND PATTERN: RANDOM ASHLAR STONE	736	2	1472
BP-2	BRIDGE PIERS - MIDDLE	CIP CONCRETE FORMLINER	COLOR: RED/BROWN BLEND PATTERN: BRICK	1808	2	3616
BP-3	BRIDGE PIERS - COPING AND CAP	CIP CONCRETE FORMLINER	COLOR: GREY FINISH: SMOOTH FACE	104	2	208
BP-4	BRIDGE PIERS - PANEL (BEHIND LOGO)	CIP CONCRETE FORMLINER	COLOR: GREY FINISH: SMOOTH FACE	56	2	112
BP-5	BRIDGE PIERS - LOGO PANEL	ALUMINUM METAL PANEL	CUSTOM LASER CUT SIGN PANEL WITH BACKLIGHTING - TEAL	42	2	84

Refer to engineering documents for all structural, civil and electrical items.
Vector artwork is available for all custom features.
Contractor shall provide shop drawings for review and approval
Contractor shall provide (3) color and material samples from the manufacturer's standard offerings for each specified item for Village review and selection.
Contractor shall provide a mockup of the specified formliners for Village review and approval. Mockup shall be at least 5'x5'. if approved, the mockup may become an article of the work.

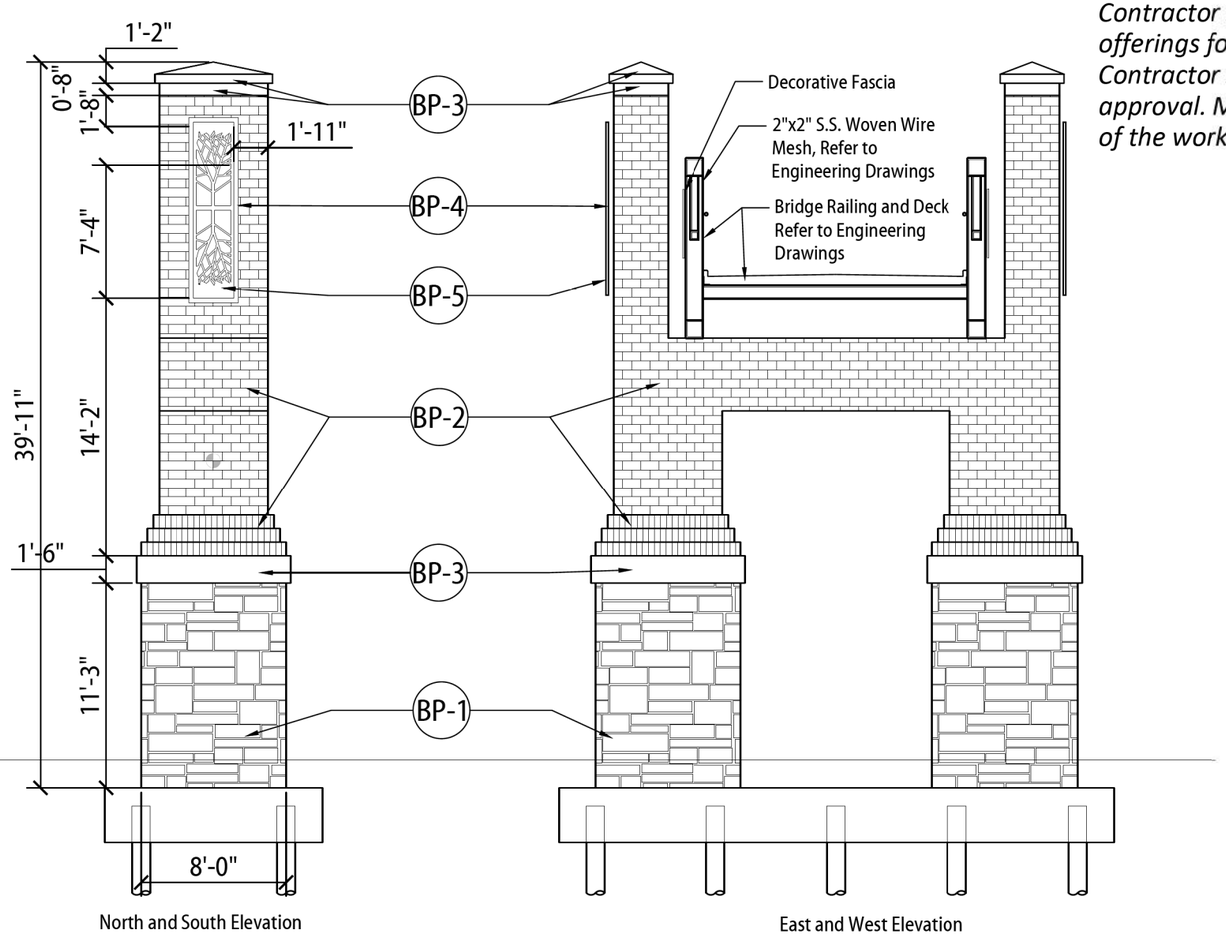

1 BRIDGE PIER DETAILS, PIERS 35 & 36

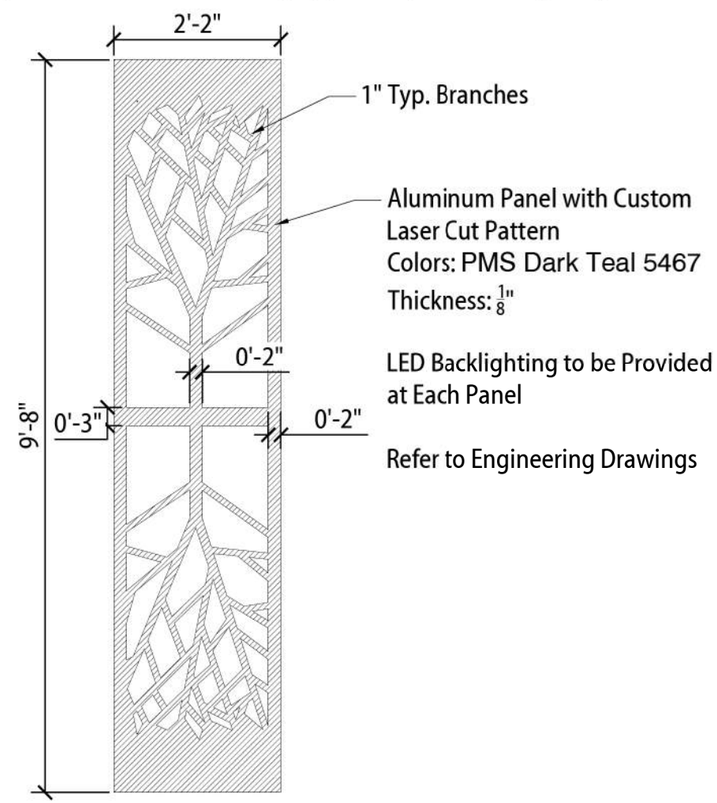

2 BRIDGE PIER LOGO DETAIL

MODEL: Default
FILE NAME: pw:\\ths-pwint01.s-6.transysccorp.com:transysccorp-pw1\Documents\Projects_2021\CI401 - CIHcsgp\P401210087 - Streamwood - Pedestrian Bridge over IL 59 - Phase II\303.00 - Roadway\303.01 - Standard Sheets\10 Landscaping Details\210087-SHT-LSCDET

teska

USER NAME = lmnainggolan	DESIGNED -	REVISED -	
	DRAWN -	REVISED -	
PLOT SCALE = 20.0000 ' / in.	CHECKED -	REVISED -	
PLOT DATE = 5/23/2023	DATE -	REVISED -	

STATE OF ILLINOIS
DEPARTMENT OF TRANSPORTATION

IL 59 PEDESTRIAN OVERPASS
BRIDGE PIER DETAILS

SCALE: SHEET 4 OF 6 SHEETS STA. TO STA.

F.A.U RTE.	SECTION	COUNTY	TOTAL SHEETS	SHEET NO.
338	21-00067-00-BR	COOK	90	37

CONTRACT NO. 61J67

ILLINOIS FED. AID PROJECT

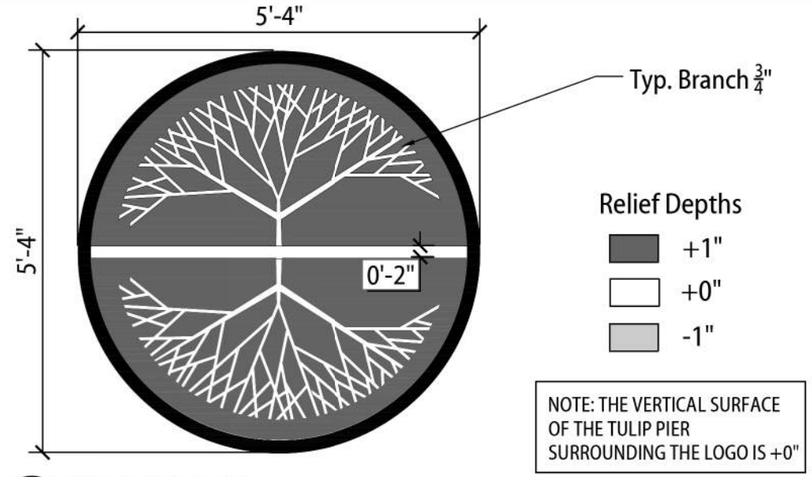

1 TULIP PIER LOGO DETAIL

TULIP PIERS - MATERIAL SCHEDULE						
SYMBOL	ITEM	MATERIAL	FINISH TREATMENT	FACE FEET (FF) PER PIER	NUMBER OF PIERS	FACE FEET (FF) TOTAL
TP-1	TULIP PIER - 33 & 38	CIP CONCRETE	COLOR: GREY STANDARD CONCRETE	426	2	852
TP-2	TULIP PIERS - LOGO	CIP CONCRETE FORMLINER	COLOR: GREY STANDARD CONCRETE AND CUSTOM FORMLINER	44	4	176
TP-3	TULIP PIER - 34 & 37	CIP CONCRETE	COLOR: GREY STANDARD CONCRETE	488	2	976

Refer to engineering documents for all structural, civil and electrical items.
Vector artwork is available for all custom features.
Contractor shall provide shop drawings for review and approval.
Contractor shall provide (3) color and material samples from the manufacturer's standard offerings for each specified item for Village review and selection.
A mockup of one logo form liner is required for Village approval.
If approved, the mockup may become an article of the work

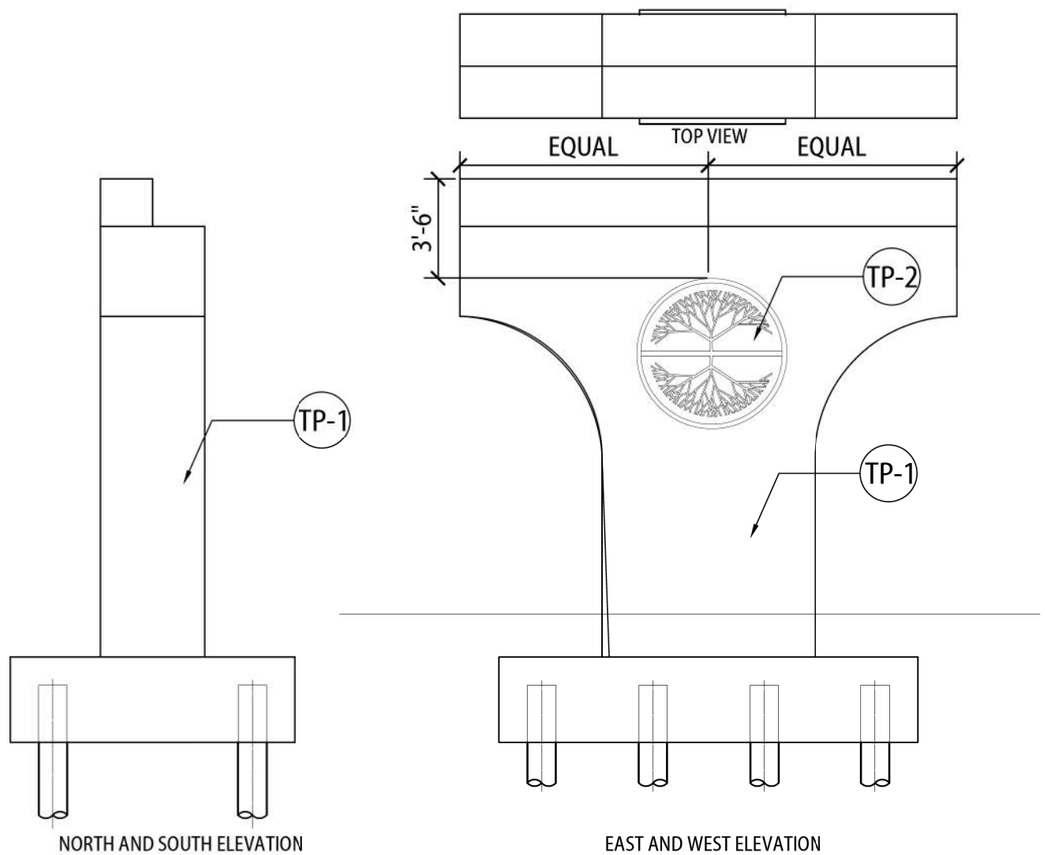

2 PIER 33 & 38

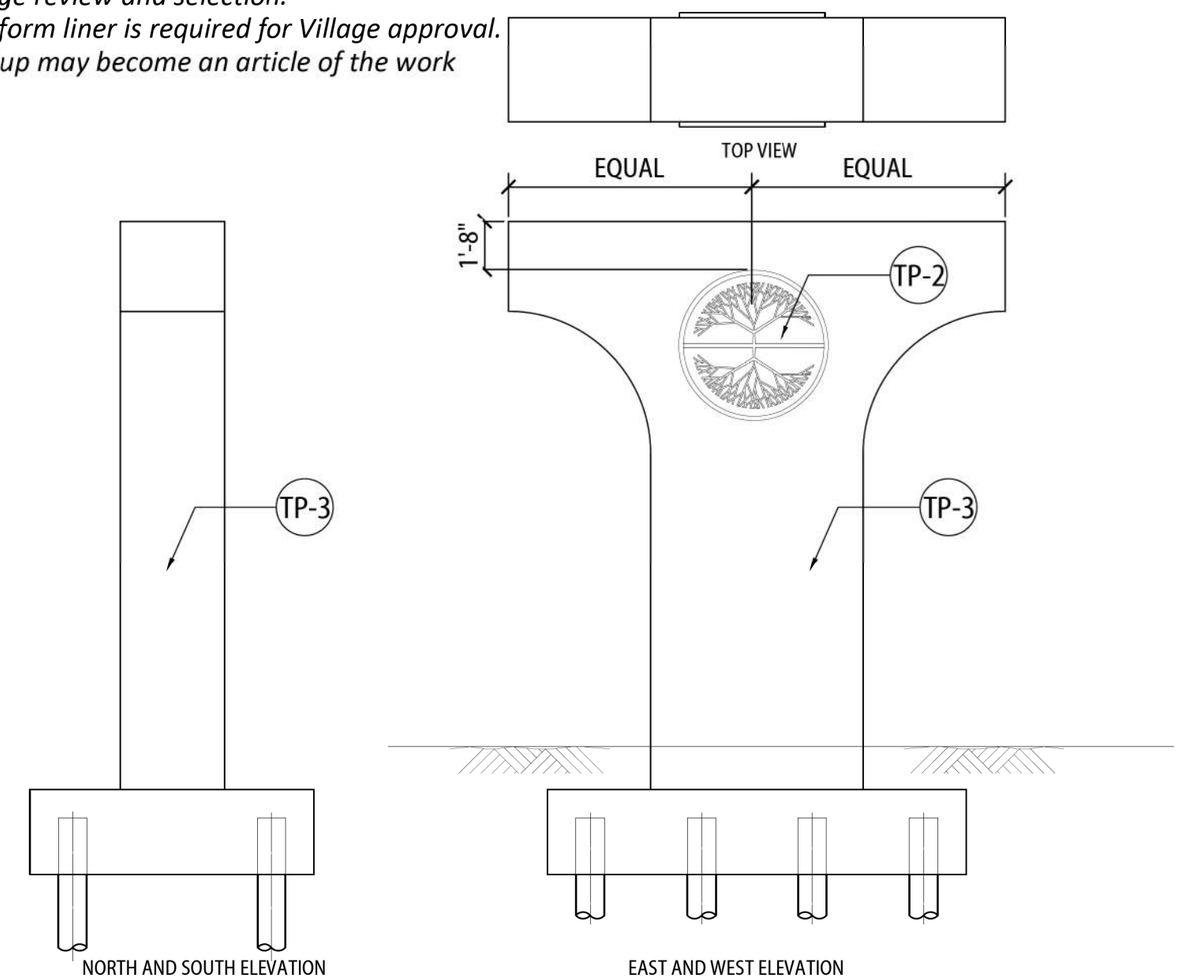

3 PIER 34 & 37 DETAIL

MODEL: Default
FILE NAME: pw:\\hc-pwint01.a-t.transystcorp.com:transystcorp-pw11\Documents\Projects_2021\CI401 - Chicago\P401210087 - Streamwood - Pedestrian Bridge over IL 59 - Phase II\303.00 - Roadway\303.01 - Standard Sheets\10 Landscaping Details\210087-SHT-LSCDET

teska

USER NAME = lmnainggolan	DESIGNED -	REVISED -
	DRAWN -	REVISED -
PLOT SCALE = 20.0000 ' / in.	CHECKED -	REVISED -
PLOT DATE = 5/23/2023	DATE -	REVISED -

STATE OF ILLINOIS
DEPARTMENT OF TRANSPORTATION

IL 59 PEDESTRIAN OVERPASS
TULIP PIER DETAILS

SCALE: SHEET 5 OF 6 SHEETS STA. TO STA.

F.A.U RTE.	SECTION	COUNTY	TOTAL SHEETS	SHEET NO.
338	21-00067-00-BR	COOK	90	38
		CONTRACT NO. 61J67		
	ILLINOIS	FED. AID PROJECT		

PRODUCT	MANUFACTURER	SPECIFICATION	QUANTITY
Bench	Streetlife	Olympic Wave Crosswise Bench, Color: Olive Green, Backed	2
Bench	Streetlife	Olympic Wave Crosswise Bench, Color: Olive Green, Backless	2
Trash Receptacles	See Below	Black with Custom Banding Detail	2
Recycling Receptacles	See Below	Black with Custom Banding Detail	2

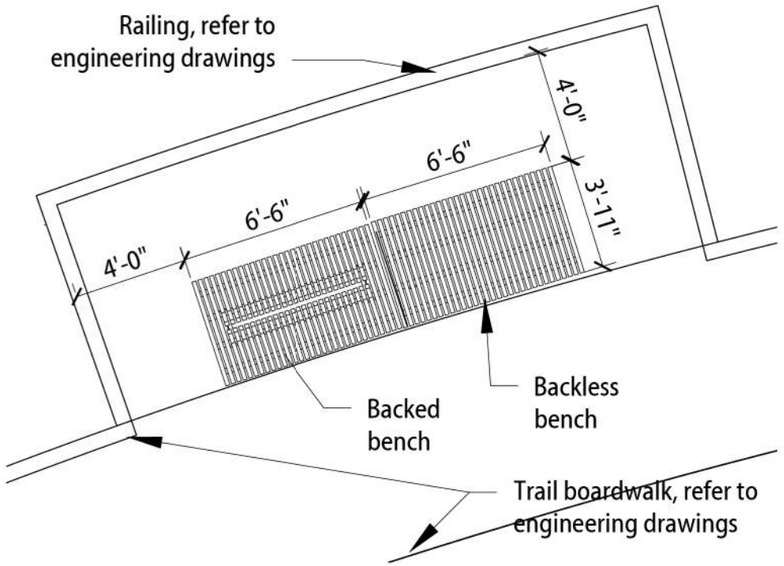

1 BENCH SEATING AREA - TYP. DETAIL

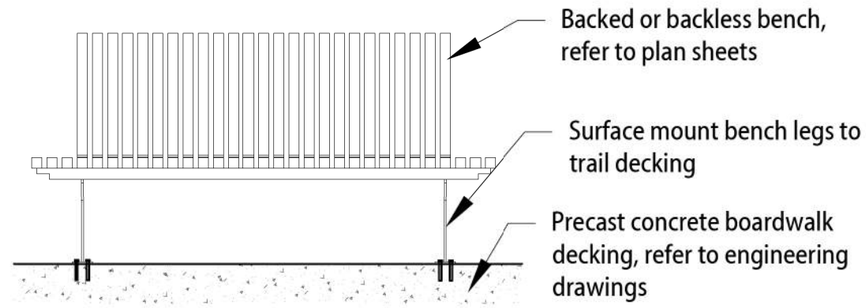

NOTE:
INSTALL BENCHES PER MANUFACTURER'S SPECIFICATIONS.USE MANUFACTURER'S BOLT TEMPLATE AND RECOMMENDED HARDWARE.

2 SURFACE MOUNTED BENCH DETAIL - TYP.

Manufacturer: Streetlife - *www.steetlife.com*
Model: Olympic Wave Crosswise Bench
Metal: Galvanized Steel, Powdercoated Olive Green RAL 6003
Wood: Cumaru, 100% FSC Certified, Unfinished

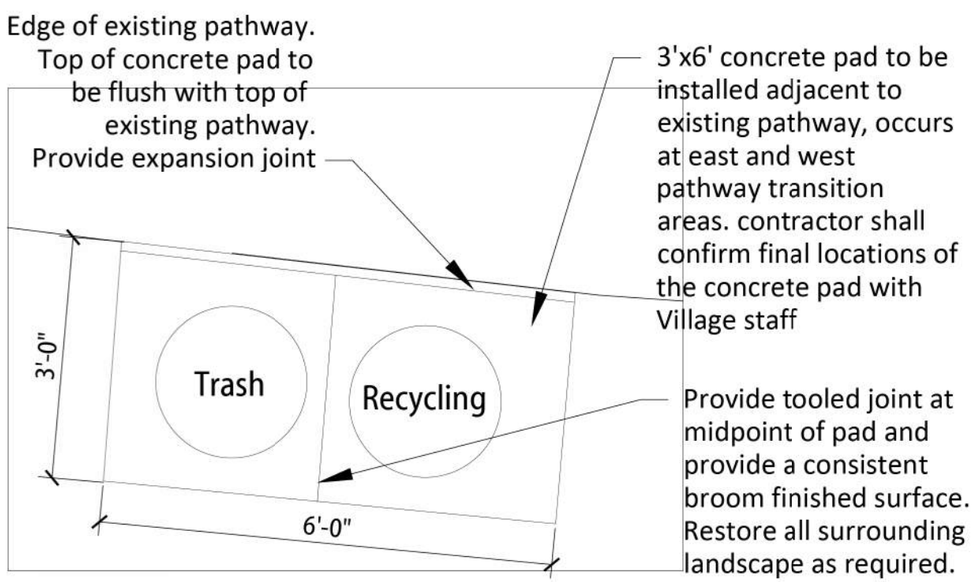

3 TRASH/RECYCLING RECEPTACLES AND CONCRETE PAD ∗

∗ = CONCRETE PAD SHALL BE PAID FOR AS PCC SIDEWALK 5" WITH AGGREGATE BASE COURSE, TYP B 4"

Custom Village Decal TBD

NOTE:
TRASH AND RECYCLING RECEPTACLE TO BE SURFACE MOUNTED TO
THE CAST IN PLACE CONCRETE PAD USING THE MANUFACTURER'S RECOMMENDED INSTALLATION DETAILS.

Trash / Recycling Receptacles

Receptacle Style: Top Loading
Receptacle Color: TBD based on Village review of manufacturer's standard selections
Liner Color: TBD based on Village review of manufacturer's standard selections
Receptacle Signage: Litter and Recycling, TBD based on Village review of manufacturer's standard selections
Custom Decal: Village of Streamwood custom decal, artwork to be provided upon product selection
Mounting: surface mount to concrete pad using manufacturer's supplied hardware

Available through the following manufacturers:

Mfr: Victor Stanley
Model: S-45
www.victorstanley.com

Mfr: Landscape Forms
Model: Scarborough
www.landscapeforms.com

Mfr: Keystone Ridge
Model: Midtown
www.keystoneridgedesigns.com

SCHEDULE OF QUANTITIES

NO	PAY ITEM NAME	UNIT	QTY TOTAL	IN IDOT ROW
1	ELECTRIC SERVICE INSTALLATION	EACH	1	
2	ELECTRIC UTILITY SERVICE CONNECTION	L SUM	1	
3	UNDERGROUND CONDUIT, GALVANIZED STEEL, 2 1/2" DIA.	FOOT	120	
4	CONDUIT ATTACHED TO STRUCTURE, 1" DIA., GALVANIZED STEEL	FOOT	1,280	X
5	CONDUIT ATTACHED TO STRUCTURE, 1 1/2" DIA., GALVANIZED STEEL	FOOT	1,410	X
6	CONDUIT EMBEDDED IN STRUCTURE, 1" DIA., GALVANIZED STEEL	FOOT	20	
7	JUNCTION BOX, STAINLESS STEEL, ATTACHED TO STRUCTURE, 6" X 6" X 4"	EACH	20	
8	JUNCTION BOX, STAINLESS STEEL, ATTACHED TO STRUCTURE, 12" X 12" X 6"	EACH	1	
9	JUNCTION BOX, STAINLESS STEEL, ATTACHED TO STRUCTURE, 20" X 16" X 6"	EACH	6	
10	JUNCTION BOX, STAINLESS STEEL, EMBEDDED IN STRUCTURE, 8" X 8" X 6"	EACH	4	
11	UNIT DUCT, 600V, 2-1C NO.8, 1/C NO.8 GROUND, (XLP-TYPE USE), 3/4" DIA. POLYETHYLENE	FOOT	45	
12	UNIT DUCT, 600V, 3-1C NO.10, 1/C NO.10 GROUND, (XLP-TYPE USE), 3/4" DIA. POLYETHYLENE	FOOT	45	
13	ELECTRIC CABLE IN CONDUIT, 600V (XLP-TYPE USE) 1/C NO. 10	FOOT	2,380	X
14	ELECTRIC CABLE IN CONDUIT, 600V (XLP-TYPE USE) 1/C NO. 8	FOOT	5,050	X
15	ELECTRIC CABLE IN CONDUIT, 600V (XLP-TYPE USE) 3-1/C NO. 10	FOOT	2,380	X
16	ELECTRIC CABLE IN CONDUIT, 600V (XLP-TYPE USE) 3-1/C NO. 3/0	FOOT	130	
17	LIGHTING CONTROLLER, BASE MOUNTED, 480VOLT, 100AMP	EACH	1	
18	PEDESTRIAN BRIDGE LIGHTING SYSTEM	L SUM	1	X
19	LUMINAIRE, LED, SPECIAL	EACH	20	
20	AESTHETIC LED STRIP LIGHT, 4W/FT, WHITE	FOOT	72	
21	AESTHETIC LED STRIP LIGHT DRIVER - 24V POWER SUPPLY	EACH	4	
22	LIGHT POLE, SPECIAL	EACH	20	

GENERAL NOTES

1. ROADWAY LIGHTING REQUIREMENTS FOR THIS PROJECT SHALL COMPLY WITH THE IDOT STANDARD SPECIFICATIONS FOR ROAD AND BRIDGE CONSTRUCTION (LATEST EDITION), IDOT AND RECURRING SPECIAL PROVISIONS, CONTRACT SPECIAL PROVISIONS, AND THE AMERICAN NATIONAL STANDARD PRACTICE FOR ROADWAY LIGHTING AND THE ANSI/IES RP-8.

2. IT SHALL BE THE CONTRACTOR'S RESPONSIBILITY TO COORDINATE AND CONFIRM THE PROPOSED LOCATIONS OF ALL LIGHT POLES AND THE LIGHTING CONTROLLER WITH THE STRUCTURAL CONTRACTOR AND ENGINEER. THE EXACT LOCATIONS OF ALL ITEMS SHALL BE CONFIRMED WITH THE ENGINEER PRIOR TO STARTING WORK.

3. TO MAINTAIN THE STRUCTURAL INTEGRITY OF LIGHT POLES WITH MAST ARMS, THEY SHALL NOT BE ERECTED AND LEFT TO STAND WITHOUT LUMINAIRES. NOTE THAT THE CONTRACTOR SHALL NOT BE PAID FOR POLES UNTIL LUMINAIRES ARE INSTALLED.

4. THE CONTRACTOR SHALL VERIFY THE REQUIREMENTS FOR THE ELECTRICAL SERVICE FOR THE PROPOSED ROADWAY LIGHTING. IT IS THE CONTRACTOR'S RESPONSIBILITY FOR TIMELY NOTIFICATION AND COORDINATION WITH THE ELECTRIC UTILITY COMPANY.

5. ALL WIRE SPLICING TO BE PERFORMED INSIDE LIGHT POLES OR WATERTIGHT JUNCTION BOXES.

6. CONTRACTOR SHALL INSTALL IDENTIFICATION NUMBERS ON ALL NEW LIGHT POLES.

7. THE CONTRACTOR SHALL SUBMIT DETAILED SHOP DRAWINGS OR CATALOG CUTS FOR ALL EQUIPMENT AND MATERIALS TO THE VILLAGE OF STREAMWOOD FOR APPROVAL PRIOR TO FABRICATION OR INSTALLATION. FAILURE TO SUBMIT AND APPROVE MATERIAL MAY RESULT IN UNACCEPTED WORK AND/OR REINSTALLATION.

8. AT LEAST FIVE (5) WORKING DAYS BEFORE STARTING ANY EXCAVATION, THE CONTRACTOR SHALL CALL "JULIE" (JOINT UTILITY LOCATION INFORMATION FOR EXCAVATORS) AT 811 FOR FIELD LOCATIONS OF BURIED UTILITIES. CONTRACTOR SHALL VERIFY ANY UNDERGROUND OR OVERHEAD UTILITY LOCATIONS AND RESOLVE UTILITY CONFLICTS PRIOR TO BEGINNING WORK.

9. PROVIDE COMBINATION EXPANSION / DEFLECTION FITTINGS FOR RIGID CONDUITS OR JUNCTION BOXES ACROSS EXPANSION JOINTS AND AT TRANSITION FROM UNDERGROUND CONDUIT TO CONDUIT ATTACHED/EMBEDDED IN STRUCTURES. THE COST OF EXPANSION/DEFLECTION FITTINGS SHALL BE INCLUDED IN THE COST OF THE CONDUIT.

10. 12" X 16" STAINLESS STEEL EXTERIOR NAMEPLATE SHALL BE INSTALLED ON LIGHTING CONTROLLER, ENGRAVED WITH "VILLAGE OF STREAMWOOD LIGHTING CONTROLLER".

LEGEND

- DECORATIVE LIGHTING UNIT: 16.0' M.H. UNLESS NOTED OTHERWISE, LED LIGHT FIXTURE
- VILLAGE OF STREAMWOOD DECORATIVE LOGO LIGHT FIXTURE
- PR LIGHTING CONTROLLER 240/480V, 1-PH, 3-WIRE
- PR GROUND MOUNTED SERVICE INSTALLATION, VOLTAGE AS INDICATED ON PLANS
- JB — PR LIGHTING STAINLESS STEEL JUNCTION BOX (TYPE AND SIZE AS INDICATED ON THE PLANS)
- PR UNIT DUCT WITH CABLE (TYPE AND SIZE AS INDICATED ON THE PLANS)
- PR CONDUIT ATTACHED TO STRUCTURE (TYPE AND SIZE AS INDICATED ON THE PLANS)
- PR HANDRAIL LIGHTING WITH CABLE (TYPE AND SIZE AS INDICATED ON THE PLANS)

CIRCUIT DESIGNATION SCHEME

LUMINAIRE CIRCUIT & NUMBER

LIGHTING UNIT STATION

A1
STA. XXX+XX

MODEL: Default
FILE NAME: pw:\\ts-pwint01.a-d.transystems.com:transyscorp-pw11\Documents\Projects_2021\CI401 - CHicago\P401210087 - Streamwood - Pedestrian Bridge over IL 59 - Phase II\303.00 - Roadway\303.01 - Standard Sheets\11 Lighting Details\Lighting General Notes

TRANSYSTEMS

USER NAME = lmnainggolan	DESIGNED - BTW	REVISED -	
	DRAWN - BTW	REVISED -	
PLOT SCALE = 100.0000 ' / in.	CHECKED - LGB	REVISED -	
PLOT DATE = 5/31/2023	DATE -	REVISED -	

STATE OF ILLINOIS
DEPARTMENT OF TRANSPORTATION

IL 59 PEDESTRIAN OVERPASS
LIGHTING GENERAL NOTES

SCALE: | SHEET 1 OF 1 SHEETS | STA. TO STA.

F.A.U RTE.	SECTION	COUNTY	TOTAL SHEETS	SHEET NO.
338	21-00067-00-BR	COOK	90	40
		CONTRACT NO. 61J67		
	ILLINOIS	FED. AID PROJECT		

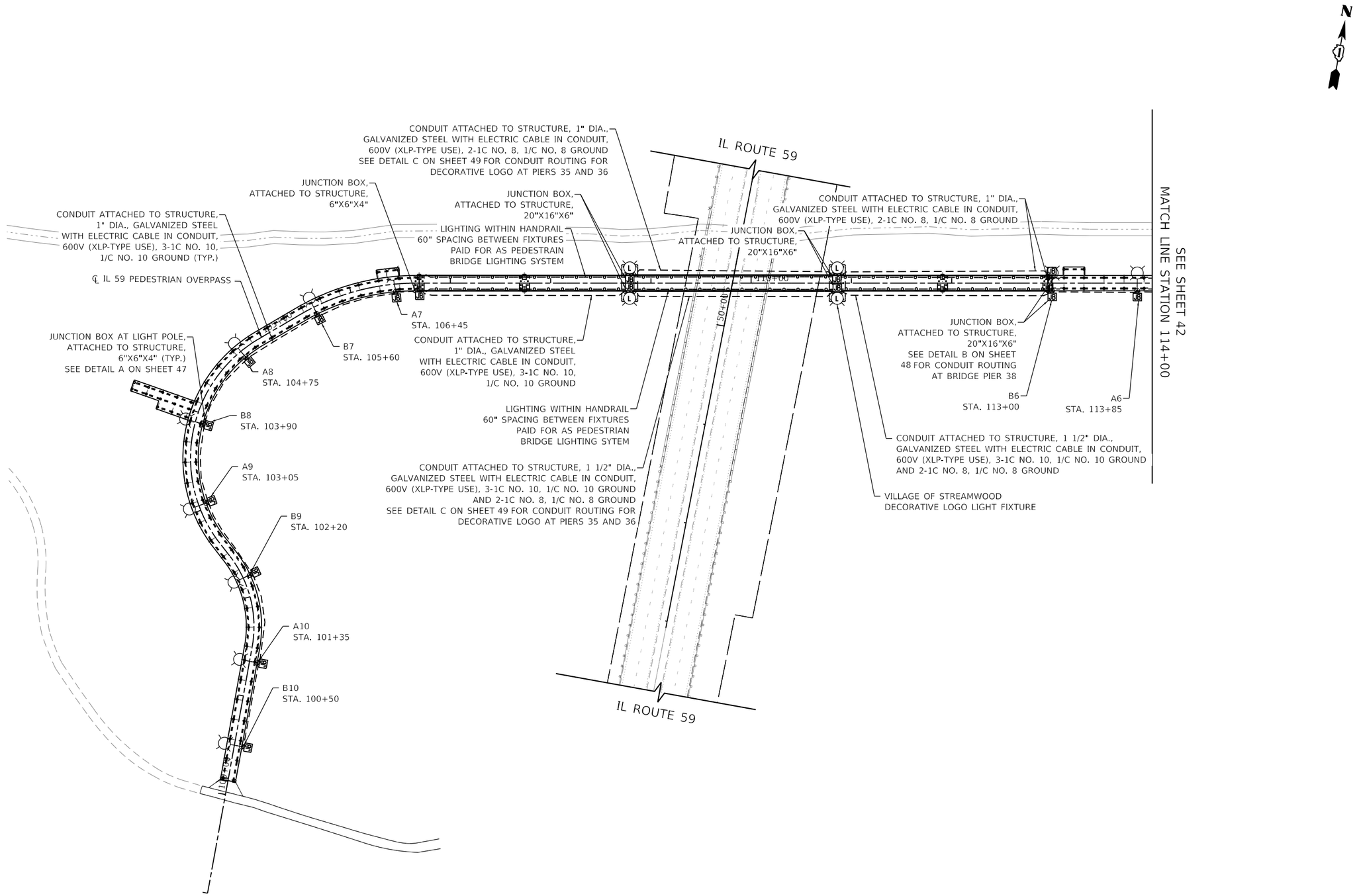

MODEL: Default
FILE NAME: pw:\\ts-pwfn01.a-st.transystems.com:transystems-pw1\Documents\Projects_2021\CH401 - CHicago\P40121 0087 - Streamwood - Pedestrian Bridge over IL 59 - Phase II\303.00 - Roadway\303.01 - Standard Sheets\11 Lighting Details\PR LGH 010

TRANSYSTEMS

USER NAME = tmnainggolan	DESIGNED - BTW	REVISED -	
	DRAWN - BTW	REVISED -	
PLOT SCALE = 100.0000 ' / in.	CHECKED - LGB	REVISED -	
PLOT DATE = 5/23/2023	DATE -	REVISED -	

STATE OF ILLINOIS
DEPARTMENT OF TRANSPORTATION

IL 59 PEDESTRIAN OVERPASS
PROPOSED LIGHTING PLANS

SCALE: 1"=50' | SHEET 1 OF 2 SHEETS | STA. 100+00 TO STA. 114+00

F.A.U RTE.	SECTION	COUNTY	TOTAL SHEETS	SHEET NO.
338	21-00067-00-BR	COOK	90	41

CONTRACT NO. 61J67

ILLINOIS | FED. AID PROJECT

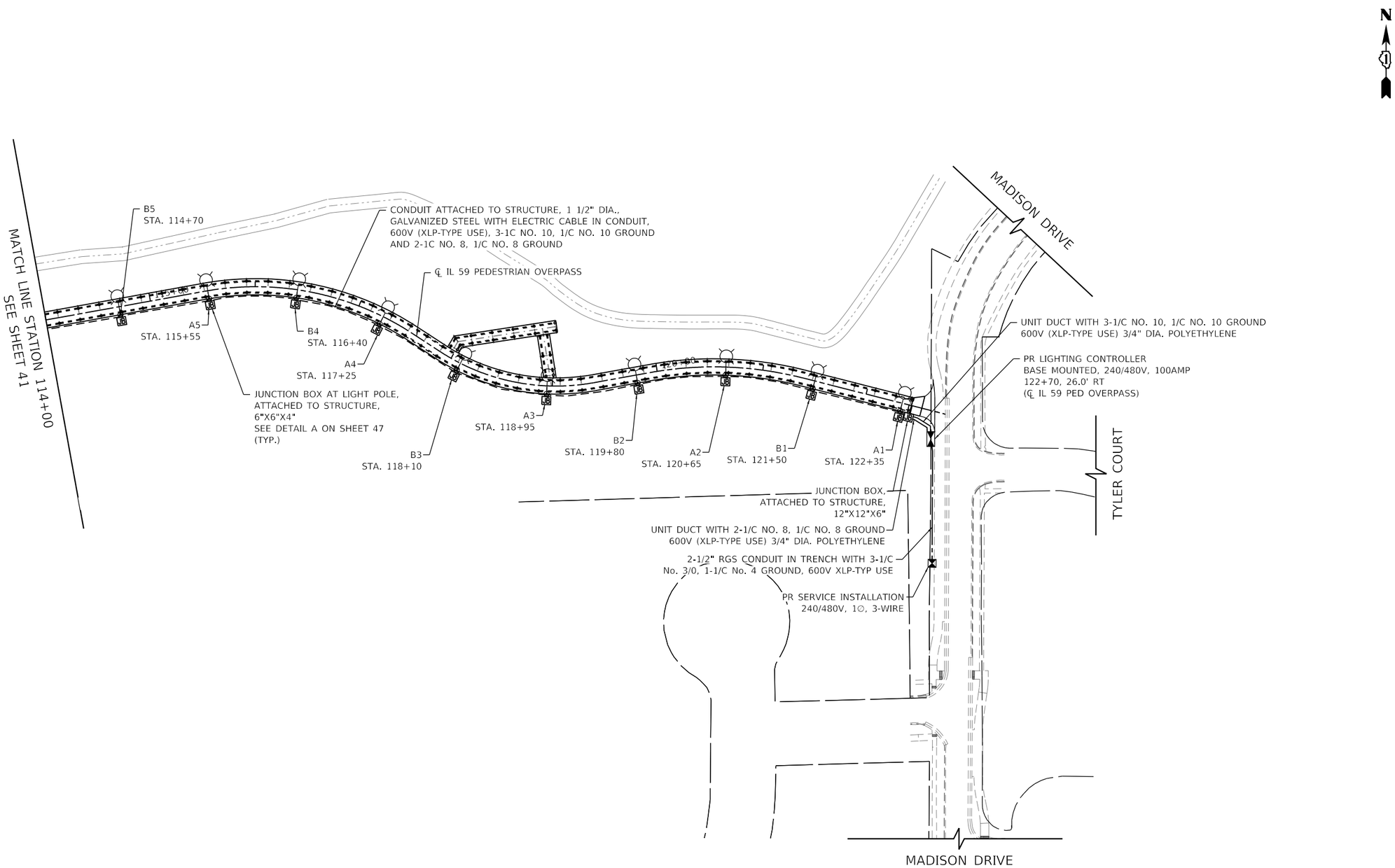

MODEL: Default
FILE NAME: pw:\\hi-pwfil01.s-a.transystems.com:transystems-pw1\Documents\Projects_2021\CH401 - CHicago\P401210087 - Streamwood - Pedestrian Bridge over IL 59 - Phase II\303.00 - Roadway\303.01 - Standard Sheets\11 Lighting Details\PR LGH 012

TRANSYSTEMS

USER NAME = lmnainggolan	DESIGNED - BTW	REVISED -	
	DRAWN - BTW	REVISED -	
PLOT SCALE = 100.0000 ' / in.	CHECKED - LGB	REVISED -	
PLOT DATE = 5/23/2023	DATE -	REVISED -	

STATE OF ILLINOIS
DEPARTMENT OF TRANSPORTATION

IL 59 PEDESTRIAN OVERPASS
PROPOSED LIGHTING PLANS

SCALE: 1"=50' | SHEET 2 OF 2 SHEETS | STA. 114+00.00 TO STA. 122+92.29

F.A.U RTE.	SECTION	COUNTY	TOTAL SHEETS	SHEET NO.
338	21-00067-00-BR	COOK	90	42

CONTRACT NO. 61J67

ILLINOIS | FED. AID PROJECT

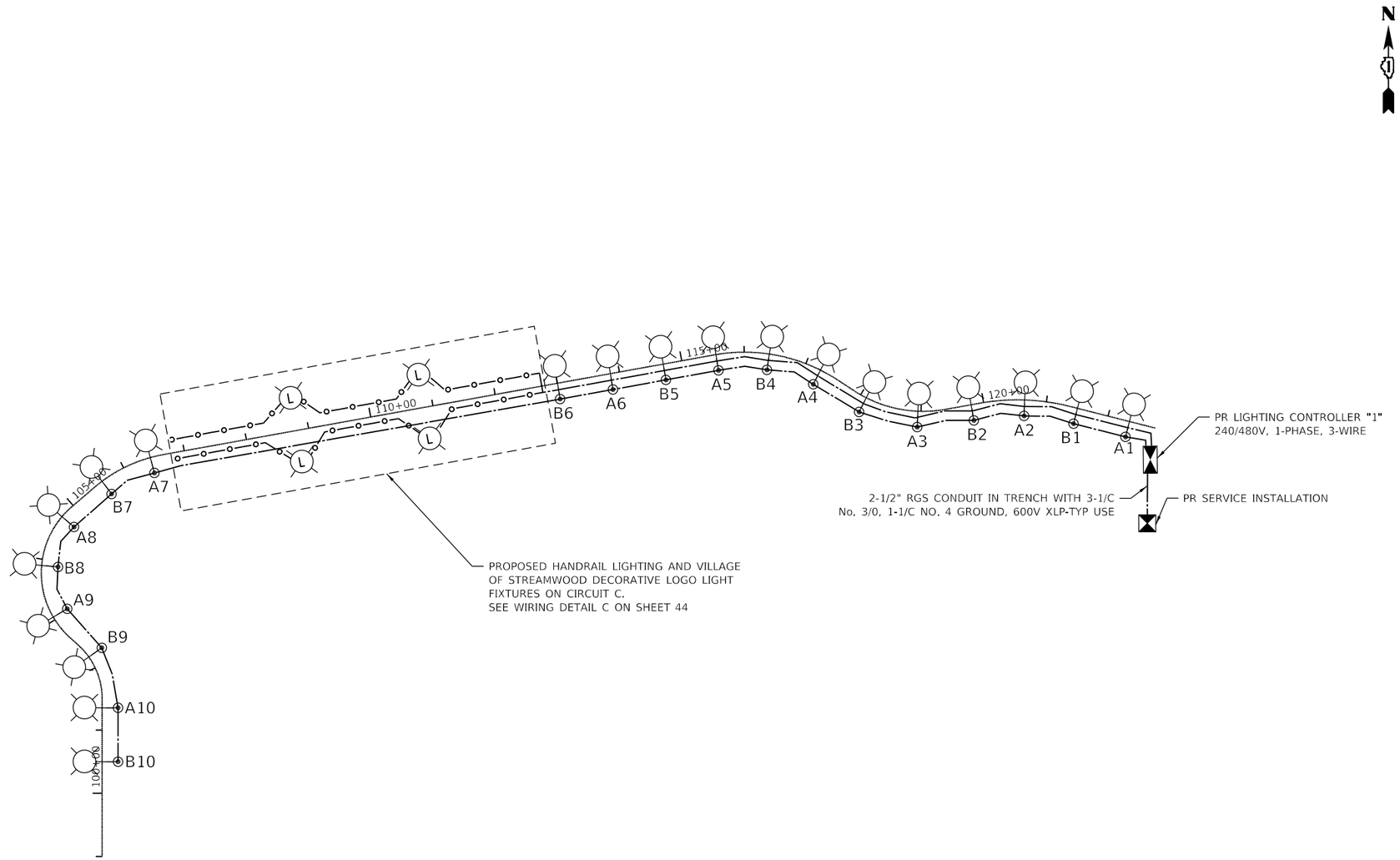

PANEL SCHEDULE AND
LOAD TABULATION
PROPOSED LIGHTING CONTROLLER
240/480V, 1-PHASE, 3-WIRE

MAIN BREAKER: 100A

CIRCUIT	BREAKER TRIP AMPS @ 240V	AMPS	WATTS
A	50-1P	1.46	350
B	50-1P	1.46	350
C	50-1P	6.67	1,600
	TOTAL	9.59	2.30 kW

MODEL: Default
FILE NAME: pw:\\bc-pwint01-a-b.transystcorp.com:transystcorp-pw1\Documents\Projects_2021\CI401 - Chicago\P401210087 - Streamwood - Pedestrian Bridge over IL 59 - Phase II\303.00 - Roadway\Sheets\11 Lighting Details\Lighting Wiring Diagram

TRANSYSTEMS

USER NAME = lmnainggolan	DESIGNED - BTW	REVISED -	
	DRAWN - BTW	REVISED -	
PLOT SCALE = 200.0000 ' / in.	CHECKED - LGB	REVISED -	
PLOT DATE = 5/23/2023	DATE -	REVISED -	

STATE OF ILLINOIS
DEPARTMENT OF TRANSPORTATION

IL 59 PEDESTRIAN OVERPASS
LIGHTING WIRING DIAGRAM

SCALE: SHEET 1 OF 2 SHEETS STA. TO STA.

F.A.U RTE.	SECTION	COUNTY	TOTAL SHEETS	SHEET NO.
338	21-00067-00-BR	COOK	90	43

CONTRACT NO. 61J67

ILLINOIS FED. AID PROJECT

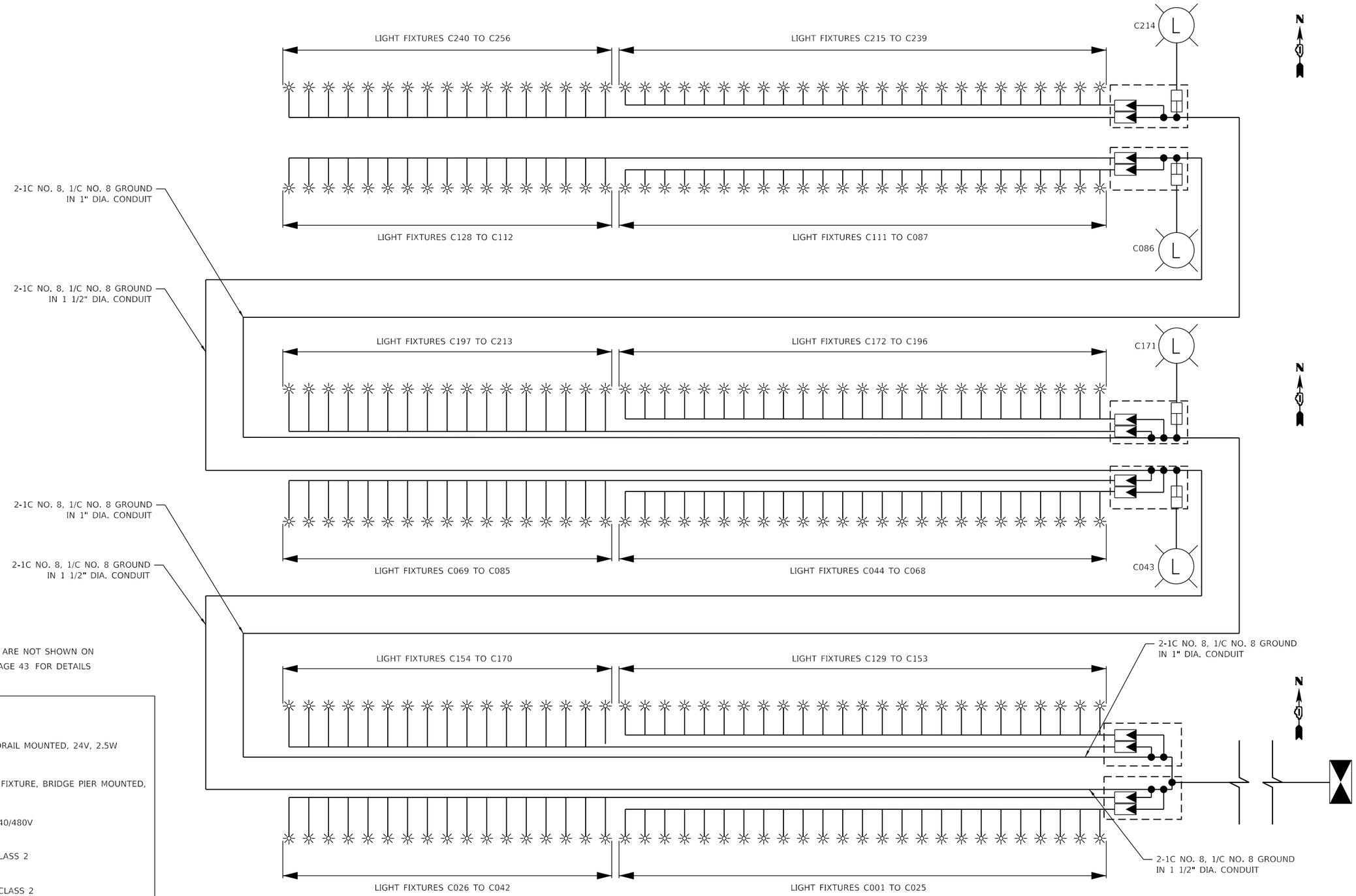

NOTES:

WIRING FOR CIRCUITS A AND B ARE NOT SHOWN ON THIS PAGE FOR CLARITY. SEE PAGE 43 FOR DETAILS

LEGEND

- LED LIGHT FIXTURE, HANDRAIL MOUNTED, 24V, 2.5W
- DECORATIVE LOGO LIGHT FIXTURE, BRIDGE PIER MOUNTED, 24V, 4W/FT
- LIGHTING CONTROLLER, 240/480V
- LED DRIVER, 24V, 94W, CLASS 2
- LED DRIVER, 24V, 100W, CLASS 2
- JUNCTION BOX 20" X 16" X 6" NEMA 3R

MODEL: Default
FILE NAME: pw:\\hi-pwim01.a-e.transyscorp.com:transyscorp-pw1\Documents\Projects_2021\CH401 - CNCopp\P401210087 - Streamwood - Pedestrian Bridge over IL 59 - Phase II\303.00 - Roadway\303.01 - Standard Sheets\11 Lighting Details\Wiring Diagram Circuit C

TRANSYSTEMS

USER NAME = lmnainggolan	DESIGNED - BTW	REVISED -	
	DRAWN - BTW	REVISED -	
PLOT SCALE = 200.0000 ' / in.	CHECKED - LGB	REVISED -	
PLOT DATE = 5/23/2023	DATE -	REVISED -	

STATE OF ILLINOIS
DEPARTMENT OF TRANSPORTATION

IL 59 PEDESTRIAN OVERPASS
CIRCUIT C LIGHTING WIRING DIAGRAM

SCALE: | SHEET 2 OF 2 SHEETS | STA. TO STA.

F.A.U RTE.	SECTION	COUNTY	TOTAL SHEETS	SHEET NO.
338	21-00067-00-BR	COOK	90	44
		CONTRACT NO. 61J67		
		ILLINOIS	FED. AID PROJECT	

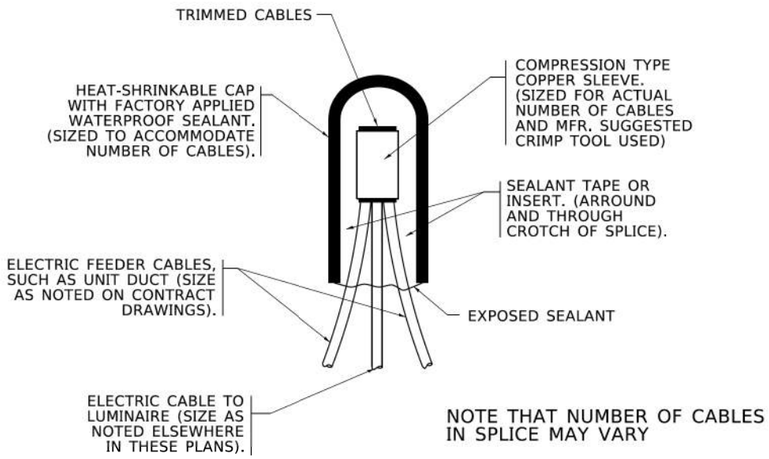

TYPICAL SPLICE DETAIL

N.T.S.

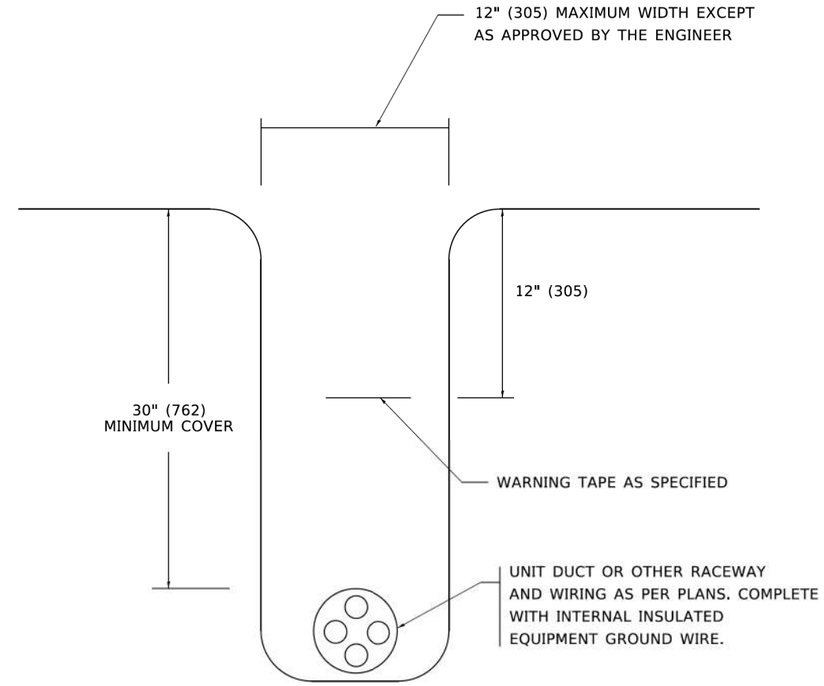

TYPICAL WIRING IN TRENCH DETAIL

N.T.S.

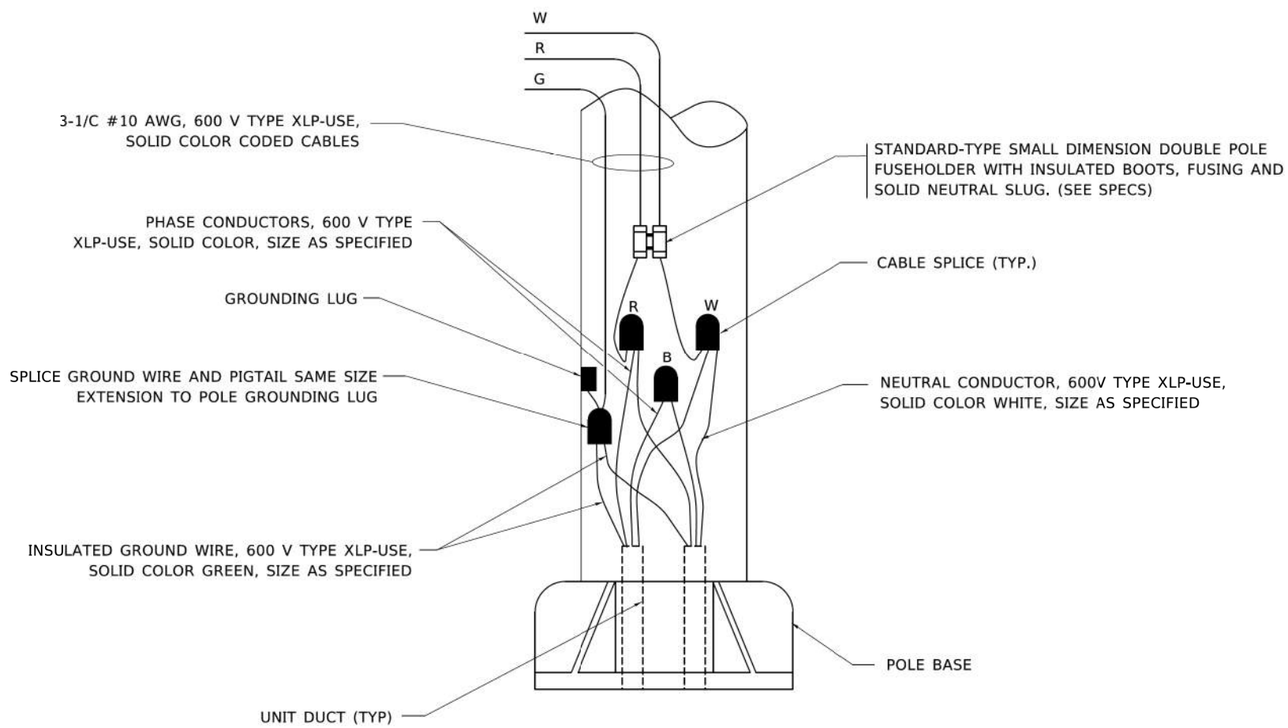

POLE WIRING DETAIL

N.T.S.

TRANSYSTEMS	USER NAME = lmnainggolan	DESIGNED -	REVISED -	STATE OF ILLINOIS DEPARTMENT OF TRANSPORTATION	IL 59 PEDESTRIAN OVERPASS MISC. ELECTRIC DETAILS SHEET A	F.A.U RTE.	SECTION	COUNTY	TOTAL SHEETS	SHEET NO.
		DRAWN -	REVISED -			338	21-00067-00-BR	COOK	90	45
	PLOT SCALE = 40.0000 ' / in.	CHECKED -	REVISED -			BE-702		CONTRACT NO. 61J67		
	PLOT DATE = 5/23/2023	DATE -	REVISED -		SCALE: SHEET 1 OF 5 SHEETS STA. TO STA.	ILLINOIS	FED. AID PROJECT			

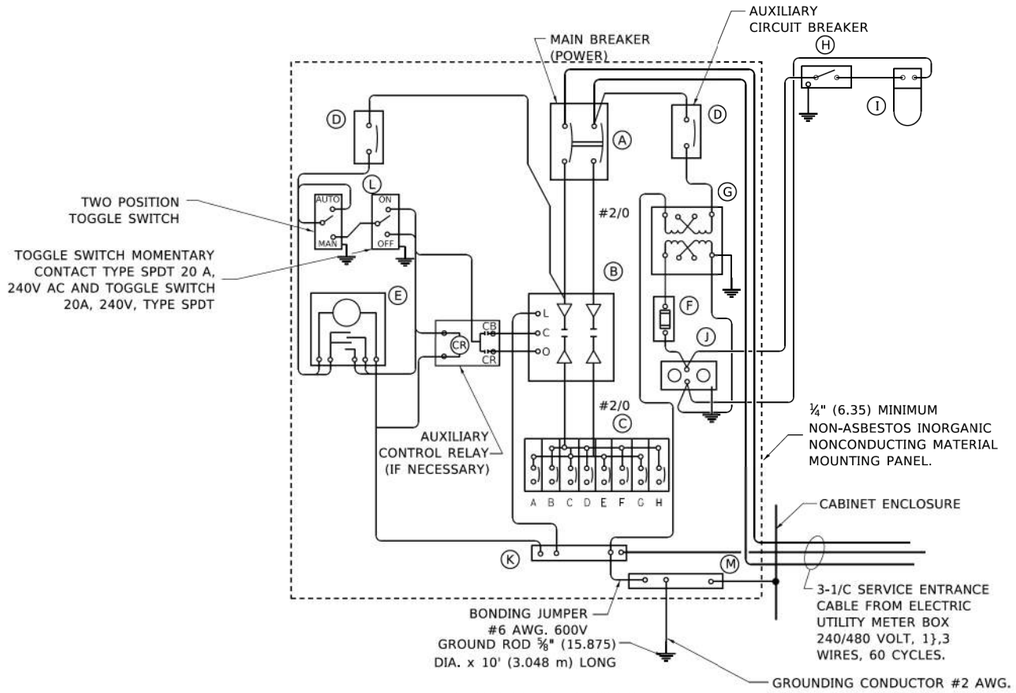

PANEL WIRING DIAGRAM

PANEL EQUIPMENT

BILL OF MATERIAL		
ITEM	QUANTITY	DESCRIPTION
A	1	MAIN CIRCUIT BREAKER, 2 POLE, 600 VOLT 100 AMP. FRAME, 100 AMP. NON-INTERCHANGEABLE TRIP INTERRUPTING RATING NEMA-22000 AMP. AT 480 VOLT.
B	1	REMOTE CONTROL SWITCH, ELECTRICALLY OPERATED, MECHANICALLY HELD, 2 POLE, SINGLE THROW, 100 AMP., 600 VOLTS CONTROL CIRCUIT 240 VOLT.
C	8	CIRCUIT BREAKERS, 1 POLE, 100AMP. FRAME, 50 AMP. NON-INTERCHANGEABLE TRIP INTERRUPTING RATING NEMA-10,000 AMP. AT 240 V.
D	2	CONTROL CIRCUIT-CIRCUIT BREAKER. 1 POLE, 240 V., 100 AMP. FRAME, 15 AMP. NON-INTERCHANGEABLE TRIP INTERRUPTING RATING NEMA-5000 AMP. AT 240 V.
E	1	ASTRONOMIC MICROPROCESSOR-BASED 2-CHANNEL CONTROLLER (TIME SWITCH).
F	1	20 AMP, 120 VOLT FUSE.
G	1	1.5 KVA, SINGLE PHASE, ENCAPSULATED TRANSFORMER 240 X 480 / 120 X 240 VOLT, 60 Hz.
H	1	SPST 20A SWITCH ON DOOR, TO TURN LIGHT ON WHEN DOOR IS OPEN,
I	1	INCANDESCENT LIGHTING FIXTURE ENCLOSED AND GASKETED WITH 60 WATT, 120 V. LAMP.
J	1	20 AMP, 120 VOLT, DUPLEX RECEPTACLE, GFCI.
K	1	COPPER GROUND BUS 1#4" (6.35) X 1" (25.4) X 12" (304.8 mm) LONG MOUNTED ON PANEL WITH LUGS AND 4 SPARE LUGS
L	1	TOGGLE SWITCHES MOUNTED IN 4" (101.6) X 4" (101.6 mm) BOX.
M	1	COPPER GROUND BUS 1#4" (6.35) X 1" (25.4) X 12" (304.8 mm) LONG MOUNTED ON PANEL WITH LUGS AND SPARE LUGS.

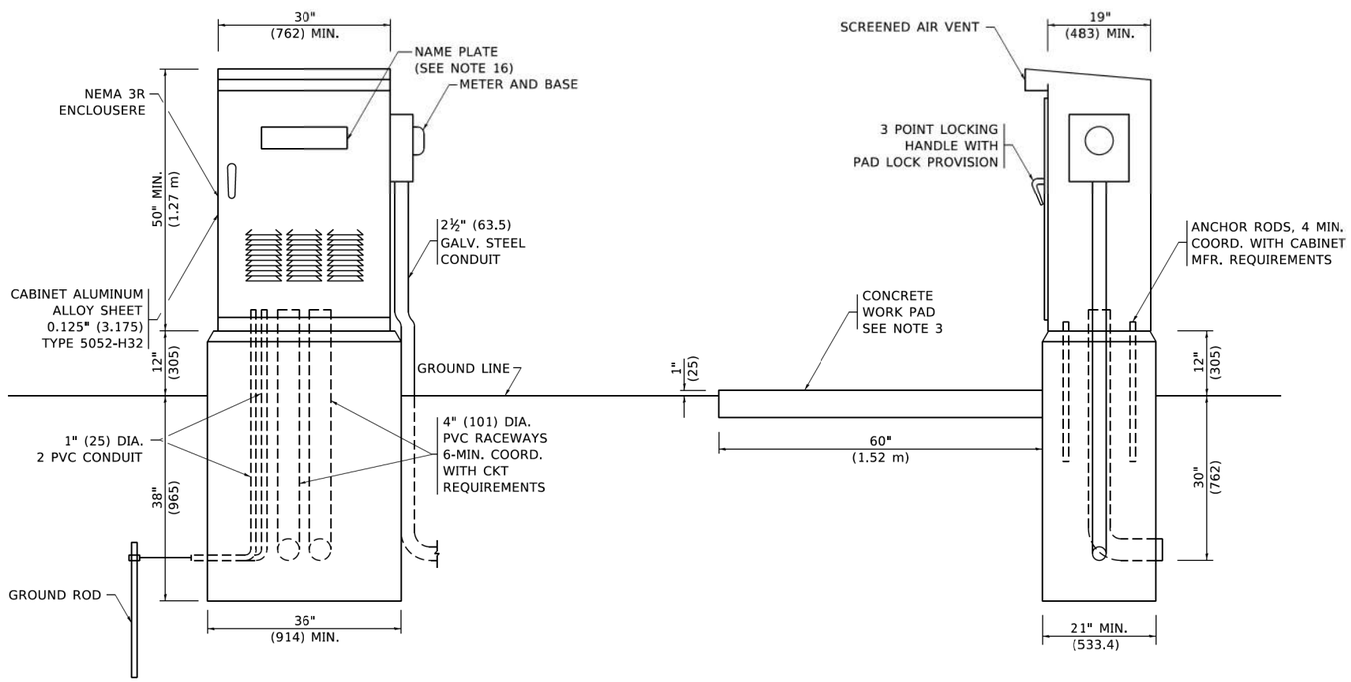

NOTES

1. ALL DIMENSIONS ARE IN INCHES (MILLIMETERS) UNLESS OTHERWISE SHOWN.
2. FOUNDATION SIZE SHALL BE COORDINATED WITH CABINET SIZE AND MFR.
3. IN FRONT OF CONTROL CABINET DOOR, REMOVE VEGETATION AND 2" (50.8 mm) TOP SOIL, LEVEL THE AREA AND ON TOP, PLACE LENGTH WISE PARALLEL TO CONTROL CABINET, A CONCRETE PAD 36" (914.4 mm) x 60" (18.288 m) x 4" (101 mm) MIN. SIZE. THE COST OF LABOR AND MATERIALS ARE INCLUDED IN THE COST OF THE CONTROLLER.
4. DOOR SHALL BE CONSTRUCTED FROM SAME TYPE OF MATERIAL AND THICKNESS AS CABINET.
5. DOOR SHALL BE EQUIPPED WITH THREE POINT LATCHING MECHANISM WITH NYLON ROLLERS AT TOP THE BOTTOM.
6. DOOR HINGE SHALL BE A HEAVY GAUGE CONTINUOUS HINGE WITH A 1#4" (6.35 mm) DIA. STAINLESS STEEL HINGE PIN.
7. ALL EXTERNAL HARDWARE SHALL BE STAINLESS STEEL.
8. CONTROL WIRING TO BE #12 AWG, 600V, TYPE "SIS" GRAY SWITCH BOARD WIRE, STRANDED COPPER.
9. METER BOX SHALL BE MOUNTED ON THE SIDE OF CONTROL CABINET, NEAR TO THE SERVICE POLE.
10. CABINETS SHALL BE PRIMED AND PAINTED AS SPECIFIED.
11. THE HEADS OF CONNECTORS SCREWS SHALL BE PAINTED WHITE FOR NEUTRAL BAR CONNECTION AND GREEN FOR GROUND BAR CONNECTORS.
12. ALL WIRING WITHIN THE CABINET SHALL BE COLOR CODED AS INDICATED.
    R = RED BL = BLUEW = WHITE
    B = BLACK Y = YELLOW G = GREEN
13. PROVIDE SEALING GROMMETS FOR ALL OPEN WIRING EXTENDED FROM DEVICES IN BOXES OR CABINETS WITHIN THE CONTROL CABINET.
14. ALL WIRING SHALL BE NEATLY DRESSED AND SUPPORTED.
15. THE CONTROLLER SHALL BE CONSTRUCTED TO U.L. STD. 508 AND BEAR THE U.L. LABEL "ENCLOSED INDUSTRIAL CONTROL PANEL".
16. 12" (304.8) X 16" (406.4 mm) STAINLESS STEEL EXTERIOR NAMEPLATE SHALL BE ENGRAVED TO "VILLAGE OF STREAMWOOD LIGHTING CONTROLS".

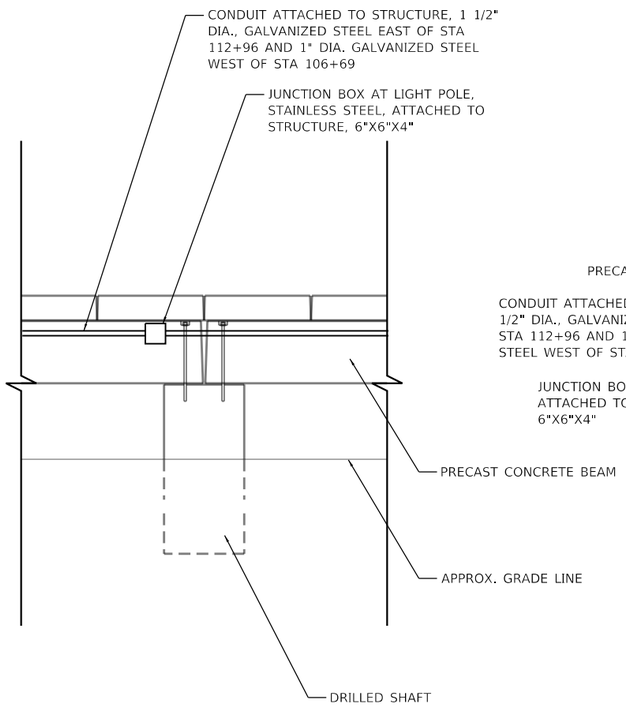

NORTH ELEVATION

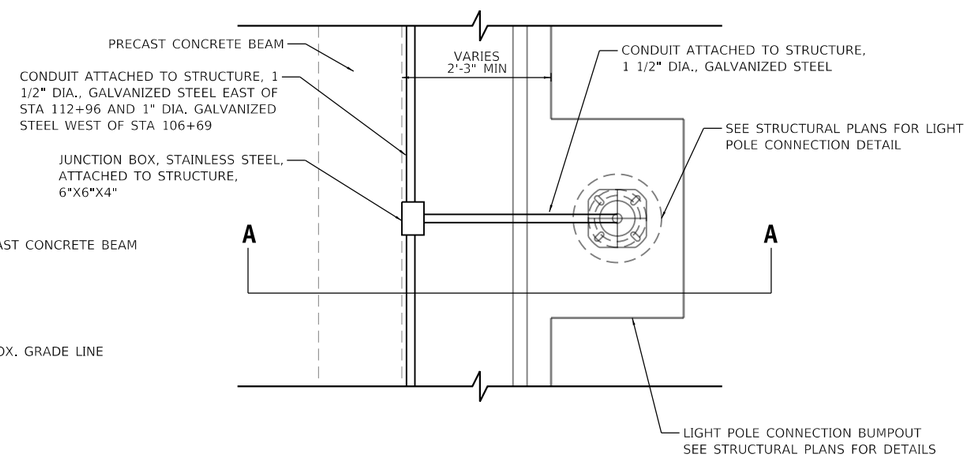

PLAN VIEW

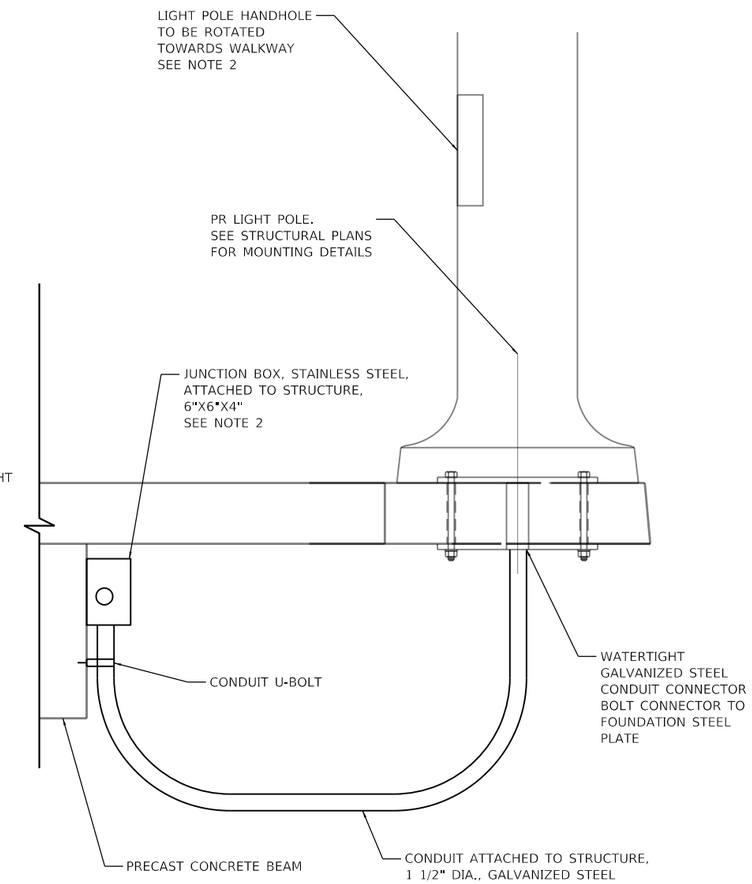

SECTION A-A

DETAIL A: LIGHT POLE CONNECTION AND JUNCTION BOX BOARDWALK DETAIL, TYPICAL

N.T.S.

NOTES:

1. SEE STRUCTURAL PLANS FOR BOARDWALK DETAILS.
2. WIRING SPLICE FOR LIGHT POLE SHALL BE LOCATED INSIDE LIGHT POLE HANDHOLE. WIRING SHALL NOT BE SPLICED IN 6"X6"X4" JUNCTION BOX.

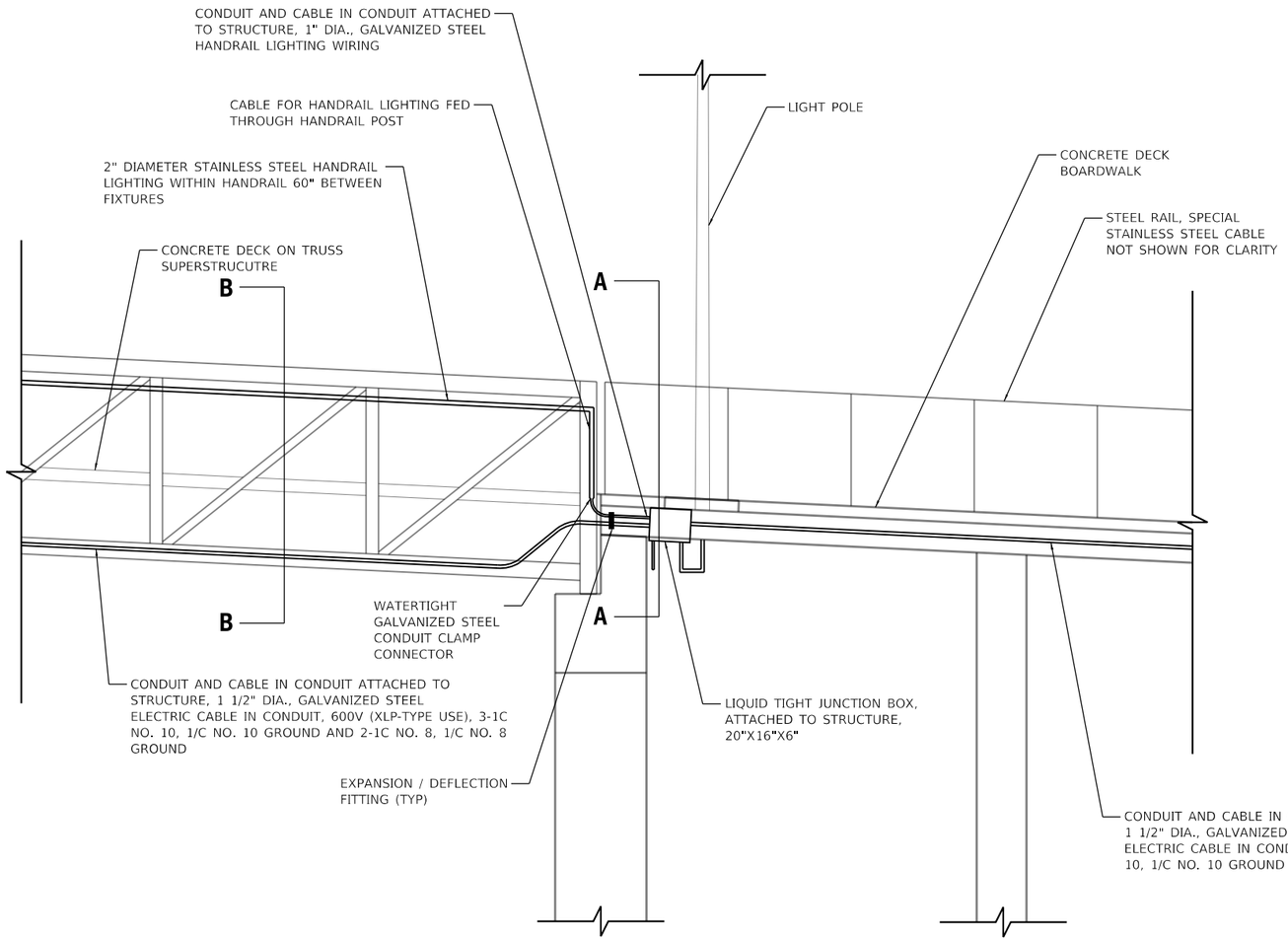

NORTH ELEVATION

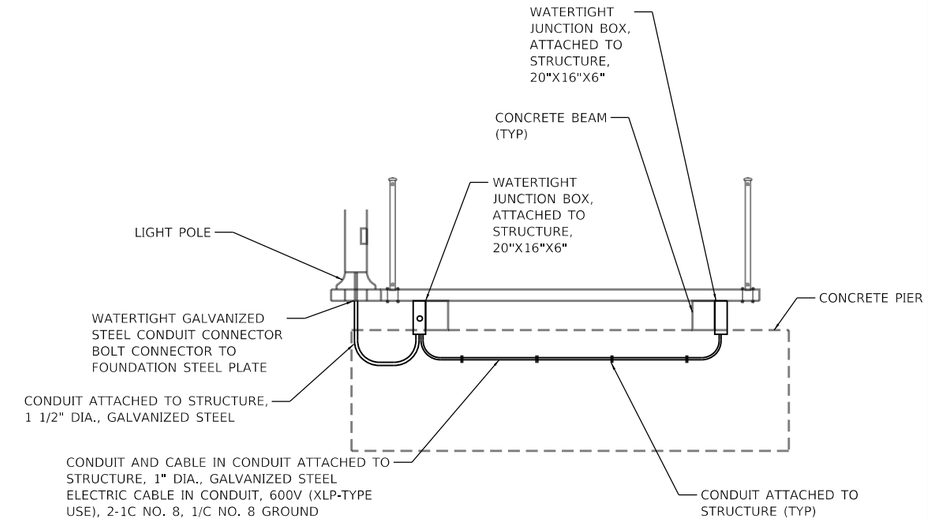

CONCRETE DECK BOARDWALK SECTION
SECTION A-A

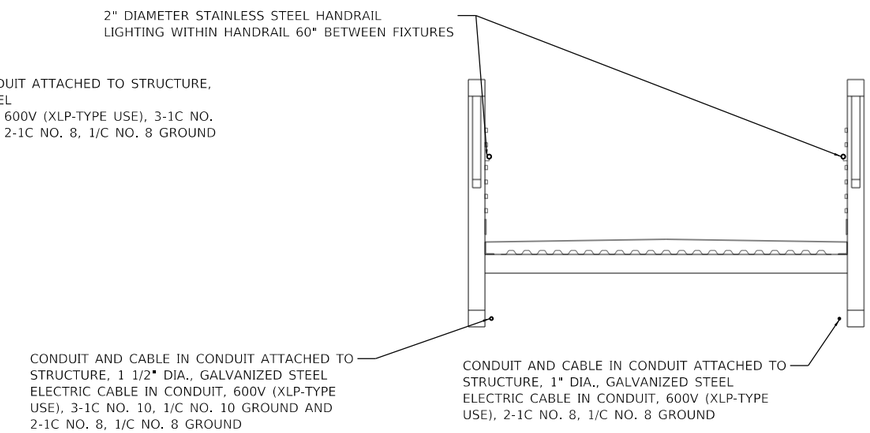

CONCRETE DECK TRUSS SUPERSTRUCTURE SECTION
SECTION B-B

DETAIL B: JUNCTION BOX AND HANDRAIL WIRING DETAIL

BRIDGE PIER 38
N.T.S.

NOTES:

1. SEE STRUCTURAL PLANS FOR SUPERSTRUCTURE, BOARDWALK, AND ABUTMENT DETAILS.

MODEL: Default
FILE NAME: pw:\\bc-pwint01.a-b.transystems.com:transystemspw11\Documents\Projects_2021\CI401 - CHicago\P401210087 - Streamwood - Pedestrian Bridge over IL 59 - Phase II\303.00 - Roadway\Sheets\11 Lighting Details\Lighting Details

TRANSYSTEMS	USER NAME = lmnainggolan	DESIGNED - BTW	REVISED -	STATE OF ILLINOIS DEPARTMENT OF TRANSPORTATION	IL 59 PEDESTRIAN OVERPASS LIGHTING DETAILS	F.A.U RTE.	SECTION	COUNTY	TOTAL SHEETS / SHEET NO.
		DRAWN - BTW	REVISED -			338	21-00067-00-BR	COOK	90 / 48
	PLOT SCALE = 200.0000 ' / in.	CHECKED - LGB	REVISED -					CONTRACT NO. 61J67	
	PLOT DATE = 5/23/2023	DATE -	REVISED -		SCALE: SHEET 4 OF 5 SHEETS STA. TO STA.		ILLINOIS	FED. AID PROJECT	

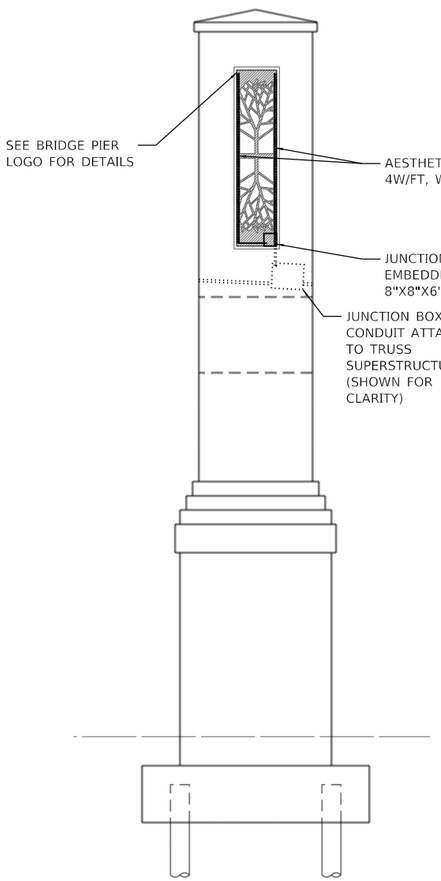

NORTH AND SOUTH ELEVATION

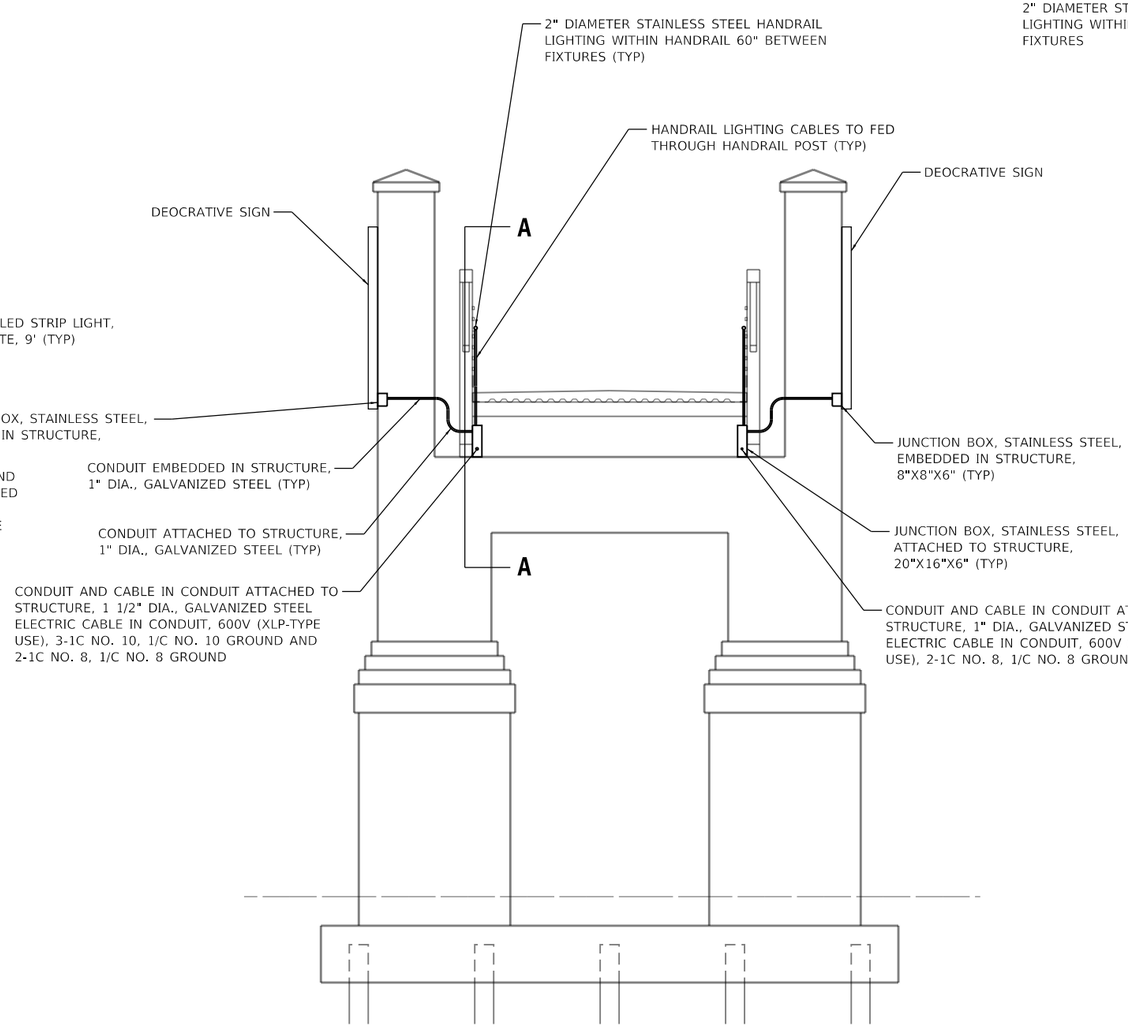

EAST AND WEST ELEVATION

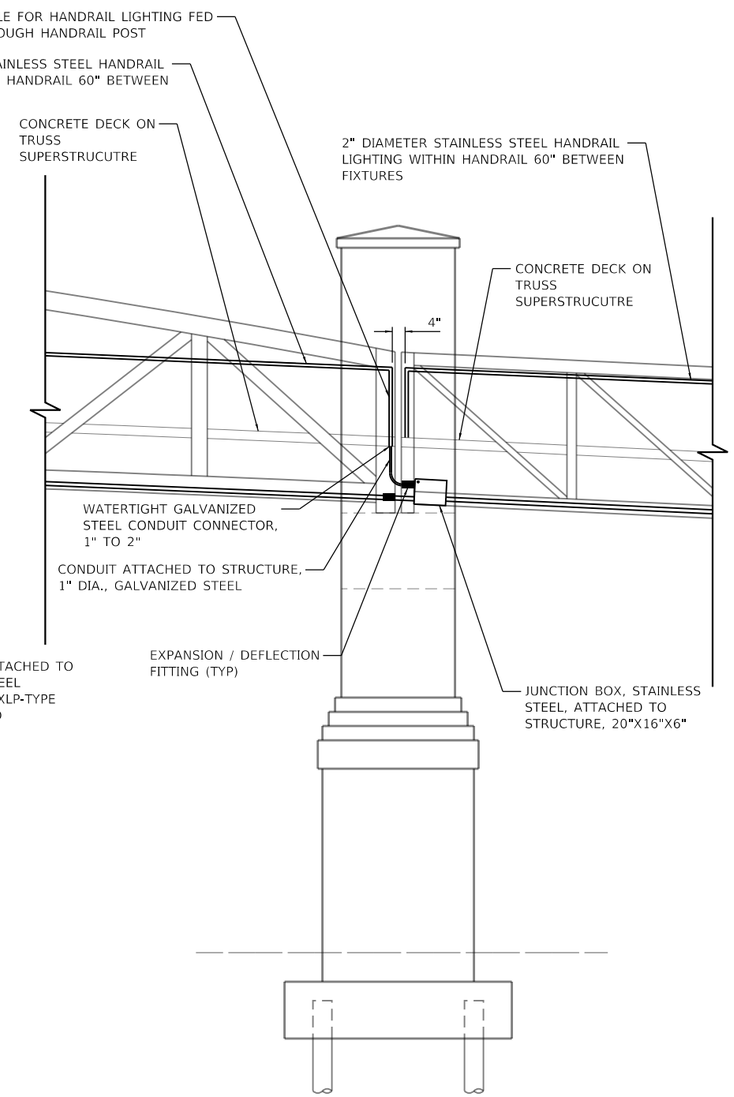

SECTION A-A

DETAIL C: LED DECORATIVE LIGHTING LOGO DETAIL

BRIDGE PIERS 35 AND 36
N.T.S.

NOTES:

1. SEE BRIDGE PIER DETAILS FOR AESTHETIC AND LOGO DETAILS.
2. SEE STRUCTURAL PLANS FOR PIER REINFORCEMENT DETAILS AND DIMMENSIONS.

MODEL: Default
FILE NAME: pw:\\ts-pwin01-a-ex.transystcorp.com:transystcorp-pw1\Documents\Projects_2021\CH401 - CHicago\P401210087 - Streamwood - Pedestrian Bridge over IL 59 - Phase II\303.00 - Roadway\303.01 - Standard Sheets\11 Lighting Details\Lighting Details

TRANSYSTEMS	USER NAME = lmnainggolan	DESIGNED - BTW	REVISED -	STATE OF ILLINOIS DEPARTMENT OF TRANSPORTATION	IL 59 PEDESTRIAN OVERPASS LIGHTING DETAILS	F.A.U RTE.	SECTION	COUNTY	TOTAL SHEETS	SHEET NO.
		DRAWN - BTW	REVISED -			338	21-00067-00-BR	COOK	90	49
	PLOT SCALE = 200.0000 ' / in.	CHECKED - LGB	REVISED -					CONTRACT NO. 61J67		
	PLOT DATE = 5/23/2023	DATE -	REVISED -		SCALE: SHEET 5 OF 5 SHEETS STA. TO STA.		ILLINOIS	FED. AID PROJECT		

Benchmark: Northwest bolt on hydrant across from Streamwood Oaks Maintenance Building, Elev. 782.61.

Existing Structure: None. IL Rte. 59 (Sutton Rd.) traffic to be maintained utilizing Stage Construction.

No Salvage

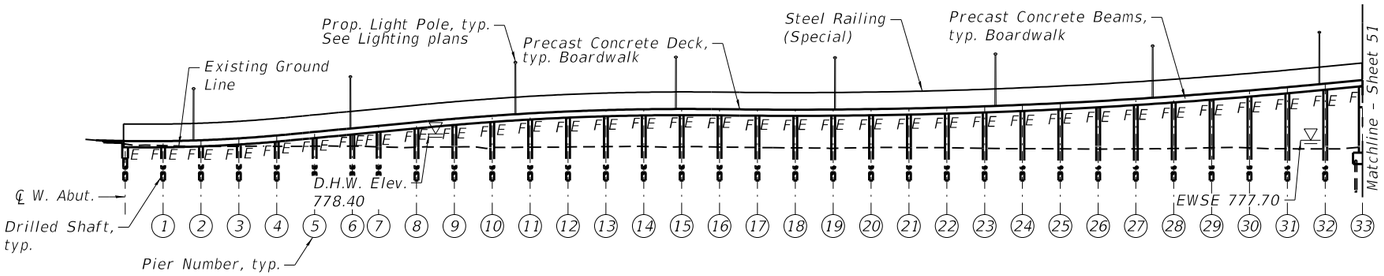

ELEVATION

Scale shown is 1H:2V

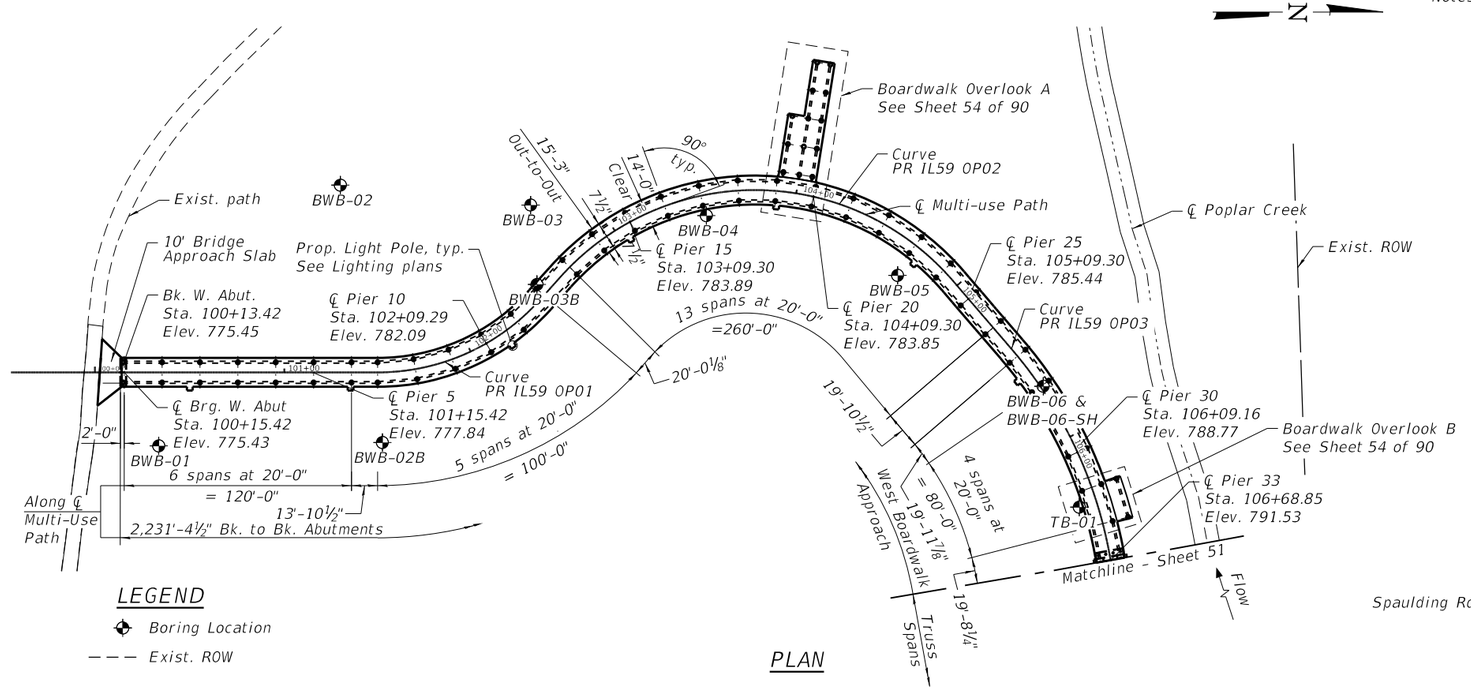

LEGEND

Boring Location

Exist. ROW

PLAN

WILLIAM J. COLLETTI
081.008091
LICENSED STRUCTURAL ENGINEER
STATE OF ILLINOIS

WILLIAM J. COLLETTI, P.E., S.E.
NO. 081-008091
EXP. DATE 11/30/2024

APPROVED
For Structural Adequacy Only
Engineer of Bridges & Structures

DESIGN SPECIFICATIONS

2020 AASHTO LRFD Bridge Design Specifications, 9th Edition

2009 AASHTO LRFD Guide Specifications for the Design of Pedestrian Bridges, 2nd Edition, with 2015 Interim Revisions

DESIGN STRESSES

FIELD UNITS

f'c = 3,500 psi
f'c = 5,000 psi (Precast)
fy = 60,000 psi (Reinforcement)
fy = 50,000 psi (M270 Grade 50)

SEISMIC DATA

Seismic Performance Zone (SPZ) = 1
Design Spectral Acceleration at 1.0 sec. (SD1) = 0.084g
Design Spectral Acceleration at 0.2 sec. (SDS) = 0.15g
Soil Site Class = D

LOADING

Pedestrian Live Load = 90 psf
Vehicle Live Load = H10

WATERWAY INFORMATION

Drainage Area = 5.90 Sq. Miles

Existing Overtopping Elev. = N/A
Proposed Overtopping Elev. = 775.20 at Sta. 100+15.42

Flood Event	Freq. Yr.	Discharge C.F.S.	Waterway Opening Ft² Exist.	Waterway Opening Ft² Prop.	Natural H.W.E.	Head - Ft. Exist.	Head - Ft. Prop.	Headwater Elev. Exist.	Headwater Elev. Prop.
	10	332/269	N/A	N/A	777.5/777.6	N/A	0.0/0.1	N/A	777.5/777.6
Design	30	468/371	N/A	N/A	778.3/778.4	N/A	0.1/0.0	N/A	778.4/778.4
Base	100	673/527	N/A	N/A	779.2/779.2	N/A	0.0/0.1	N/A	779.2/779.3
Scour Design Check	200	827/636	N/A	N/A	779.6/779.7	N/A	0.0/0.0	N/A	779.6/779.7
Overtop Existing									
Overtop Proposed									
Max. Calc.	500	1082/818	N/A	N/A	780.4/780.5	N/A	0.0/0.1	N/A	780.4/780.5

Notes:
See table on Sheets 51 thru 52 for pier elevations.
Numbers shown as 827/636 represent downstream/upstream values.

CURVE DATA

CURVE PR IL59 OP01
PI Sta. = 102+00.72
Δ = 48° 11' 16" (LT)
D = 49° 49' 21"
R = 115.00'
T = 51.43'
L = 96.72'
E = 10.98'
e = N/A
T.R. = N/A
S.E. RUN = N/A
P.C. STA. = 101+49.29
P.T. STA. = 102+46.01

CURVE PR IL59 OP02
PI Sta. = 104+19.44
Δ = 97° 31' 00" (RT)
D = 41° 31' 07"
R = 138.00'
T = 157.40'
L = 234.87'
E = 71.33'
e = N/A
T.R. = N/A
S.E. RUN = N/A
P.C. STA. = 102+62.04
P.T. STA. = 104+96.91

CURVE PR IL59 OP03
PI Sta. = 106+06.66
Δ = 30° 24' 24" (RT)
D = 24° 54' 40"
R = 230.00'
T = 62.50'
L = 122.06'
E = 8.34'
e = N/A
T.R. = N/A
S.E. RUN = N/A
P.C. STA. = 105+44.16
P.T. STA. = 106+66.22

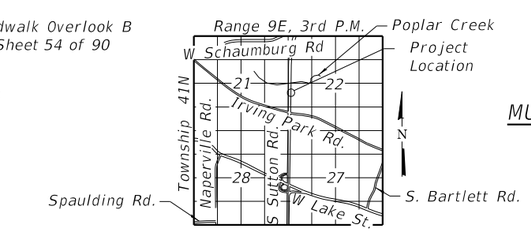

LOCATION SKETCH

GENERAL PLAN AND ELEVATION (1 OF 3)
MULTI-USE PATH OVER IL 59 (S. SUTTON RD.)
ALONG POPLAR CREEK IN STREAMWOOD
FAP 338 SECTION 21-00067-00-BR
COOK COUNTY
STATION 50+43.62
STRUCTURE NUMBER 016-8309

TRANSYSTEMS

USER NAME = lmnainggolan	DESIGNED - JE	REVISED -	
	CHECKED - WJC	REVISED -	
PLOT SCALE = 0:2.0000 ':" / in.	DRAWN - JE	REVISED -	
PLOT DATE = 5/23/2023	CHECKED - WJC	REVISED -	

STATE OF ILLINOIS
DEPARTMENT OF TRANSPORTATION

GENERAL PLAN AND ELEVATION - 1
STRUCTURE NO. 016-8309

SHEET 1 OF 29 SHEETS

F.A.P. RTE.	SECTION	COUNTY	TOTAL SHEETS	SHEET NO.
338	21-00067-00-BR	COOK	90	50

CONTRACT NO. 61J67

ILLINOIS | FED. AID PROJECT

MODEL: Default
FILE NAME: pw:\\hq-pwint01.a-e.transyscorp.com:transyscorp-pw1\Documents\Projects_2021\CH401 - Chicago\P401210087 - Streamwood - Pedestrian Bridge over IL 59 - Phase II\304.00 - Bridge\304.01 - Standard Sheets\GPE1 &slash: GENERAL PLAN AND ELEVATION - 1

5/23/2023 3:11:26 PM

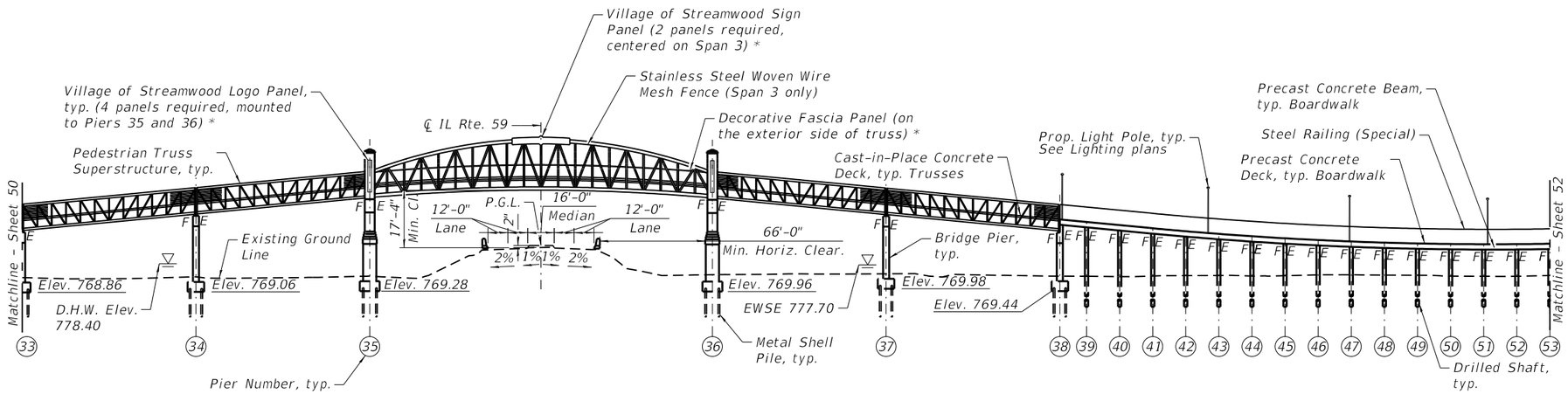

* Cost included with Furnish and Erect Sign Panel. See Architectural Plans for size, details, and placement.

ELEVATION

Scale shown is 1H:2V

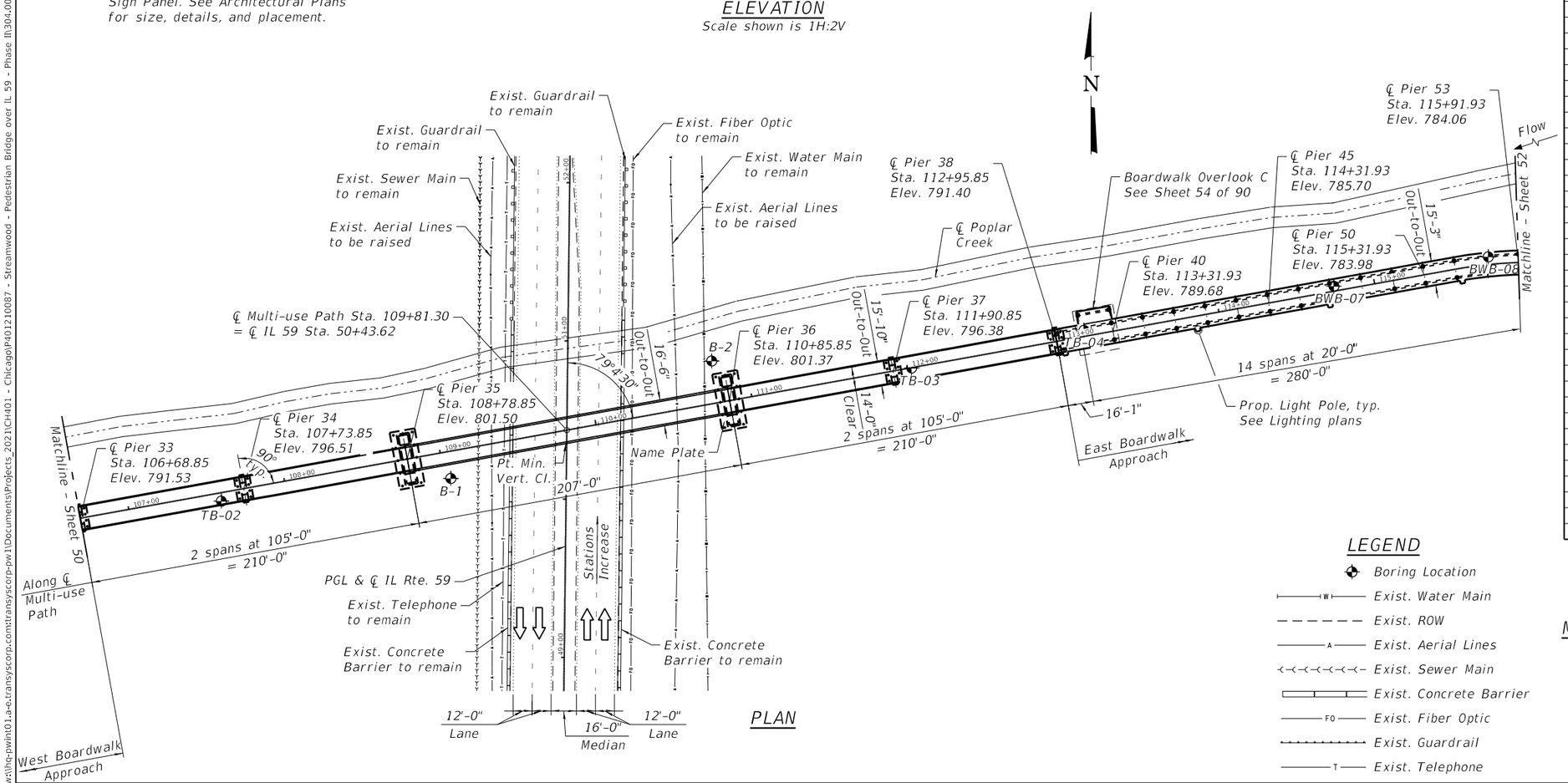

PLAN

Pier No.	Design Elevations (ft.)				
	Station	Deck Elev. @ ℄ Path	Existing Ground	100-yr Scour Depth	200-yr Scour Depth
Bk. W. Abut.	100+13.42	775.45	774.40	1.38	1.48
℄ Brg. W. Abut.	100+15.42	775.43	774.39	1.38	1.48
Pier 1	100+35.42	775.41	774.33	1.38	1.48
Pier 2	100+55.42	775.64	773.99	1.38	1.48
Pier 3	100+75.42	776.14	774.14	1.38	1.48
Pier 4	100+95.42	776.89	774.11	1.38	1.48
Pier 5	101+15.42	777.84	774.01	1.38	1.48
Pier 6	101+35.42	778.79	774.06	1.38	1.48
Pier 7	101+49.29	779.45	774.04	1.38	1.48
Pier 8	101+69.29	780.40	774.27	1.38	1.48
Pier 9	101+89.29	781.31	774.09	1.38	1.48
Pier 10	102+09.29	782.09	773.97	1.38	1.48
Pier 11	102+29.29	782.73	773.99	1.38	1.48
Pier 12	102+49.29	783.23	773.94	1.38	1.48
Pier 13	102+69.30	783.59	774.00	1.38	1.48
Pier 14	102+89.30	783.81	774.04	1.38	1.48
Pier 15	103+09.30	783.89	774.12	1.38	1.48
Pier 16	103+29.30	783.83	773.97	1.38	1.48
Pier 17	103+49.30	783.74	774.02	1.38	1.48
Pier 18	103+69.30	783.71	773.89	1.38	1.48
Pier 19	103+89.30	783.75	773.72	1.38	1.48
Pier 20	104+09.30	783.85	773.73	1.38	1.48
Pier 21	104+29.30	784.03	773.78	1.38	1.48
Pier 22	104+49.30	784.28	773.55	1.38	1.48
Pier 23	104+69.30	784.60	773.55	1.38	1.48
Pier 24	104+89.30	784.98	774.03	1.38	1.48
Pier 25	105+09.30	785.44	773.66	1.38	1.48
Pier 26	105+29.30	785.97	774.02	1.38	1.48
Pier 27	105+49.17	786.56	774.14	1.38	1.48
Pier 28	105+69.16	787.23	773.67	1.38	1.48
Pier 29	105+89.16	787.97	773.72	1.38	1.48
Pier 30	106+09.16	788.77	774.14	1.38	1.48
Pier 31	106+29.16	789.65	773.69	1.38	1.48
Pier 32	106+49.16	790.59	773.92	1.38	1.48
Pier 33	106+68.85	791.53	773.86	1.38	1.48
Pier 34	107+73.85	796.51	774.06	3.59	3.83
Pier 35	108+78.85	801.50	774.28	9.72	10.26
Pier 36	110+85.85	801.37	774.69	8.56	9.15
Pier 37	111+90.85	796.38	774.97	2.82	2.95
Pier 38	112+95.85	791.40	774.26	2.82	2.95
Pier 39	113+11.93	790.63	774.23	1.29	1.35
Pier 40	113+31.93	789.68	774.12	1.29	1.35
Pier 41	113+51.93	788.73	774.29	1.29	1.35
Pier 42	113+71.93	787.83	774.43	1.29	1.35
Pier 43	113+91.93	787.03	774.47	1.29	1.35
Pier 44	114+11.93	786.32	774.30	1.29	1.35
Pier 45	114+31.93	785.70	774.41	1.29	1.35
Pier 46	114+51.93	785.17	774.63	1.29	1.35
Pier 47	114+71.93	784.74	774.69	1.29	1.35
Pier 48	114+91.93	784.39	774.57	1.29	1.35
Pier 49	115+11.93	784.14	774.52	1.29	1.35
Pier 50	115+31.93	783.98	774.28	1.29	1.35
Pier 51	115+51.93	783.92	774.22	1.29	1.35
Pier 52	115+71.93	783.94	774.24	1.29	1.35
Pier 53	115+91.93	784.06	774.44	1.29	1.35

LEGEND

- Boring Location
- Exist. Water Main
- Exist. ROW
- Exist. Aerial Lines
- Exist. Sewer Main
- Exist. Concrete Barrier
- Exist. Fiber Optic
- Exist. Guardrail
- Exist. Telephone

GENERAL PLAN AND ELEVATION (2 OF 3)
MULTI-USE PATH OVER IL 59 (S. SUTTON RD.)
ALONG POPLAR CREEK IN STREAMWOOD
FAP 338 SECTION 21-00067-00-BR
COOK COUNTY
STATION 50+43.62
STRUCTURE NUMBER 016-8309

MODEL: Default
FILE NAME: pw:\\hq-pwint01.a-e.transyscorp.com:transyscorp-pw1\Documents\Projects_2021\CH401 - Chicago\P401210087 - Streamwood - Pedestrian Bridge over IL 59 - Phase II\304.00 - Bridge\304.01 - Standard Sheets\GPE2 &slash; GENERAL PLAN AND ELEVATION - 2

5/23/2023 3:11:29 PM

TRANSYSTEMS

USER NAME = lmainggolan	DESIGNED - JE	REVISED -	
	CHECKED - WJC	REVISED -	
PLOT SCALE = 0:2.0000 ':" / in.	DRAWN - JE	REVISED -	
PLOT DATE = 5/23/2023	CHECKED - WJC	REVISED -	

STATE OF ILLINOIS
DEPARTMENT OF TRANSPORTATION

GENERAL PLAN AND ELEVATION - 2
STRUCTURE NO. 016-8309

SHEET 2 OF 29 SHEETS

F.A.P. RTE.	SECTION	COUNTY	TOTAL SHEETS	SHEET NO.
338	21-00067-00-BR	COOK	90	51

CONTRACT NO. 61J67

ILLINOIS | FED. AID PROJECT

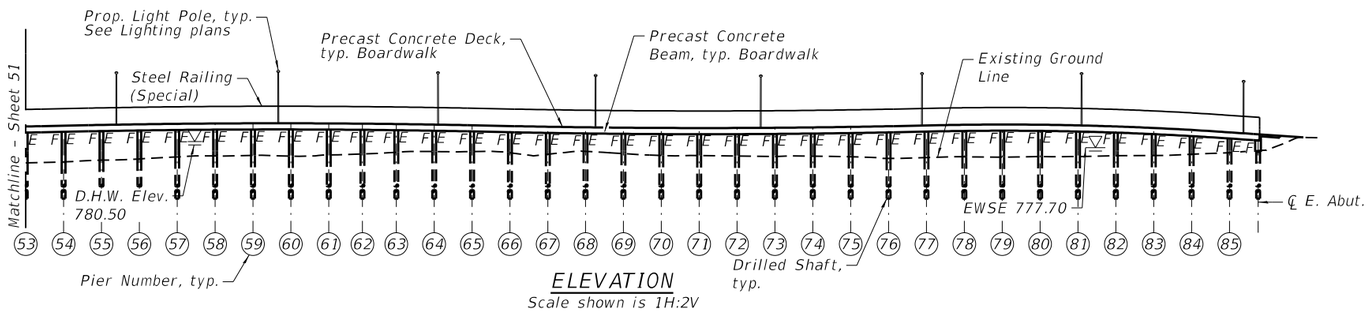

ELEVATION

Scale shown is 1H:2V

LEGEND

- Boring Location
- Exist. Manhole
- Exist. ROW
- Exist. Water Main
- Exist. Sidewalk
- Exist. Storm Sewer
- Exist. Sewer Main
- Exist. Fence

CURVE DATA

CURVE PR IL59 0P04
PI Sta. = 116+59.57
Δ = 43° 28' 11" (RT)
D = 21° 13' 14"
R = 270.00'
T = 107.64'
L = 204.85'
E = 20.66'
e = N/A
T.R. = N/A
S.E. RUN = N/A
P.C. STA. = 115+51.93
P.T. STA. = 117+56.78

CURVE PR IL59 0P05
PI Sta. = 118+67.23
Δ = 43° 25' 02" (LT)
D = 28° 38' 52"
R = 200.00'
T = 79.62'
L = 151.55'
E = 15.27'
e = N/A
T.R. = N/A
S.E. RUN = N/A
P.C. STA. = 117+87.60
P.T. STA. = 119+39.16

CURVE PR IL59 0P06
PI Sta. = 120+66.94
Δ = 24° 27' 54" (RT)
D = 16° 51' 06"
R = 340.00'
T = 73.71'
L = 145.18'
E = 7.90'
e = N/A
T.R. = N/A
S.E. RUN = N/A
P.C. STA. = 119+93.22
P.T. STA. = 121+38.40

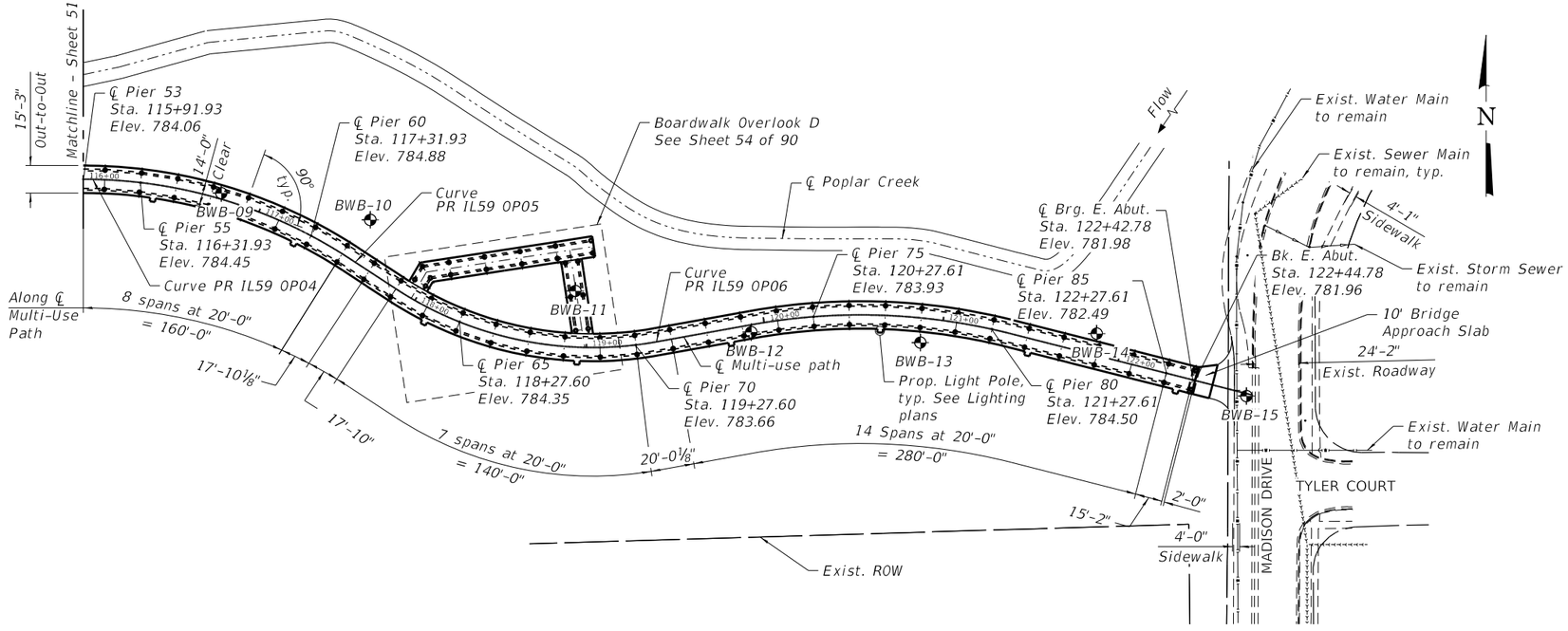

PLAN

Pier No.	Station	Design Elevations (ft.) Deck Elev. @ ℄ Path	Existing Ground	100-yr Scour Depth	200-yr Scour Depth
Pier 54		784.25	774.70	1.29	1.35
Pier 55		784.45	775.16	1.29	1.35
Pier 56		784.61	775.48	1.29	1.35
Pier 57		784.74	776.00	1.29	1.35
Pier 58		784.83	776.29	1.29	1.35
Pier 59		784.87	776.39	1.29	1.35
Pier 60		784.88	776.23	1.29	1.35
Pier 61		784.84	776.51	1.29	1.35
Pier 62		784.78	776.78	1.29	1.35
Pier 63		784.68	777.23	1.29	1.35
Pier 64		784.54	777.44	1.29	1.35
Pier 65		784.35	777.41	1.29	1.35
Pier 66		784.15	777.10	1.29	1.35
Pier 67		783.97	776.72	1.29	1.35
Pier 68		783.82	777.47	1.29	1.35
Pier 69		783.72	776.89	1.29	1.35
Pier 70		783.66	776.40	1.29	1.35
Pier 71		783.63	776.34	1.29	1.35
Pier 72		783.65	776.22	1.29	1.35
Pier 73		783.70	776.10	1.29	1.35
Pier 74		783.80	776.22	1.29	1.35
Pier 75		783.93	776.15	1.29	1.35
Pier 76		784.11	775.63	1.29	1.35
Pier 77		784.31	775.83	1.29	1.35
Pier 78		784.48	776.02	1.29	1.35
Pier 79		784.55	775.94	1.29	1.35
Pier 80		784.50	776.10	1.29	1.35
Pier 81		784.33	776.12	1.29	1.35
Pier 82		784.05	776.30	1.29	1.35
Pier 83		783.65	776.38	1.29	1.35
Pier 84		783.13	776.72	1.29	1.35
Pier 85		782.49	777.12	1.29	1.35
℄ Brg. E. Abut.		781.98	777.71	1.29	1.35
Bk. E. Abut.		781.91	777.76	1.29	1.35

GENERAL PLAN AND ELEVATION (3 OF 3)
MULTI-USE PATH OVER IL 59 (S. SUTTON RD.)
ALONG POPLAR CREEK IN STREAMWOOD
FAP 338 SECTION 21-00067-00-BR
COOK COUNTY
STATION 50+43.62
STRUCTURE NUMBER 016-8309

TRANSYSTEMS

USER NAME = lmnainggolan	DESIGNED - JE	REVISED -	
	CHECKED - WJC	REVISED -	
PLOT SCALE = 0:2.0000 ':" / in.	DRAWN - JE	REVISED -	
PLOT DATE = 5/23/2023	CHECKED - WJC	REVISED -	

STATE OF ILLINOIS
DEPARTMENT OF TRANSPORTATION

GENERAL PLAN AND ELEVATION - 3
STRUCTURE NO. 016-8309
SHEET 3 OF 29 SHEETS

F.A.P. RTE.	SECTION	COUNTY	TOTAL SHEETS	SHEET NO.
338	21-00067-00-BR	COOK	90	52
		CONTRACT NO. 61J67		
		ILLINOIS	FED. AID PROJECT	

MODEL: Default
FILE NAME: pw:\\hq-pwint01.a-e.transyscorp.com:transyscorp-pw11\Documents\Projects_2021\CH401 - Chicago\P401210087 - Streamwood - Pedestrian Bridge over IL 59 - Phase II\304.00 - Bridge\304.01 - Standard Sheets\GPE3 &slash; GENERAL PLAN AND ELEVATION - 3
5/23/2023 3:11:32 PM

GENERAL NOTES

1. Fasteners shall be ASTM A325 Type 1, mechanically galvanized bolts in painted areas and ASTM A325 Type 3 in unpainted areas. Bolt size shall be determined by the Contractor.
2. All structural steel shall be AASHTO M270 Grade 50W (except expansion joints which shall be AASTHO M270 Grade 36).
3. No field welding is permitted except as specified in the contract documents.
4. Reinforcement bars designated (E) shall be epoxy coated.
5. Concrete Sealer shall be applied to the designated areas of the exposed surfaces of the piers and abutments up to the back of backwall location.
6. All structural steel and exposed surfaces of bearings within a distance of 10 ft. each way from the deck joints shall be painted as specified in Section 506 of the Standard Specifications.
7. The Organic Zinc Rich Primer / Epoxy / Urethane Paint System shall be used for painting of new structural steel except where otherwise noted. The entire system shall be shop applied, with the exception of masked off connection surfaces, field installed fasteners, and damaged areas shall be touched up in the field. The color of the final finish coat shall be Reddish Brown, Munsell No. 2.5YR 3/4.
8. The Contractor shall field verify location of existing utilities prior to construction. The Contractor shall take precautions not to damage existing utilities. Any such damage shall be repaired by the Contractor at no additional cost.

INDEX OF SHEETS

TOTAL BILL OF MATERIAL

Item	Unit	Super	Sub	Total
Structure Excavation	Cu. Yd.		395	395
Concrete Structures	Cu. Yd.		684.9	684.9
Form Liner Textured Surface	Sq. Ft.		4,460	4,460
Protective Coat	Sq. Yd.	1,011		1,011
Concrete Superstructure (Approach Slab)	Cu. Yd.	9.5		9.5
Reinforcement Bars, Epoxy Coated	Pound	1,480	232,350	233,830
Furnishing Metal Shell Piles 12" X 0.250"	Foot		2,756	2,756
Driving Piles	Foot		2,756	2,756
Test Pile Metal Shells	Each		6	6
Name Plates	Each		1	1
Drilled Shaft In Soil	Cu. Yd.		760.6	760.6
Granular Backfill for Structures	Cu. Yd.		18	18
Concrete Sealer	Sq. Ft.		2,542	2,542
Geocomposite Wall Drain	Sq. Yd.		14	14
Pipe Underdrains For Structures 4"	Foot		31	31
Crosshole Sonic Logging Access Ducts	Foot		2,020	2,020
Crosshole Sonic Logging Testing	Each		6	6
Pedestrian Truss Superstructure	Sq. Ft.	8,778		8,778
Staining Concrete Structures	Sq. Ft.		4,662	4,662
Furnish And Erect Sign Panel	Sq. Ft.	1,940		1,940
Boardwalk Structure	Sq. Ft.	25,242		25,242
Steel Railing (Special)	Foot	3,633		3,633

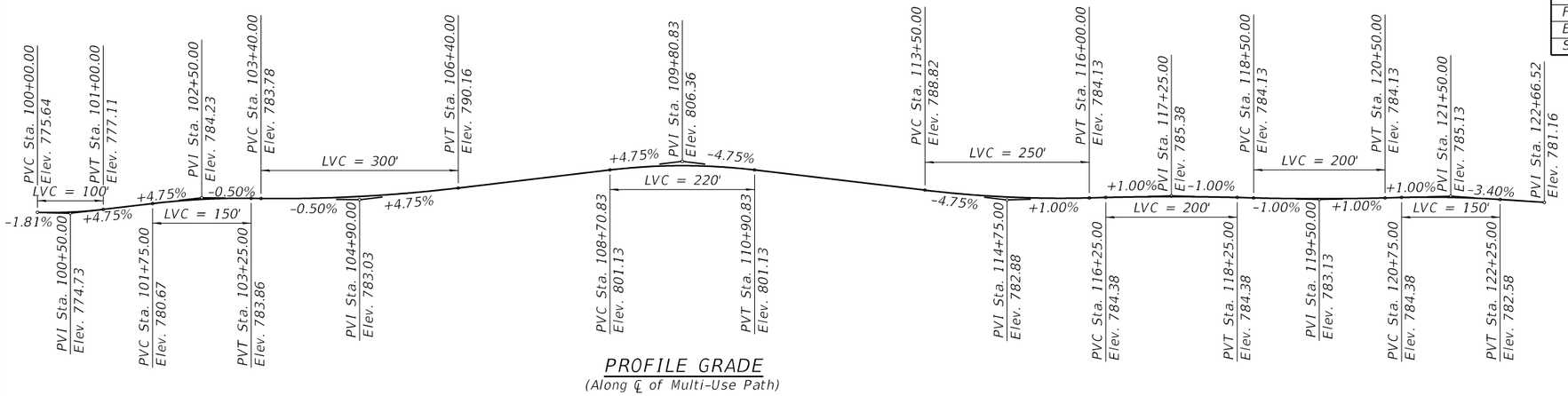

PROFILE GRADE
(Along ℄ of Multi-Use Path)

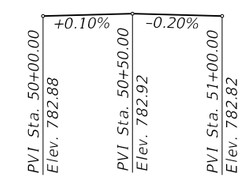

PROFILE GRADE
(Along ℄ of IL Rte. 59)

****
BUILT 202_ BY
VILLAGE OF STREAMWOOD
SEC. 21-00067-00-BR
F.A.P. RT. 338 STA. 50+43.62
STR. NO. 016-8309 LOADING H-10

NAME PLATE
See Std. 515001

**** Name of bridge to be furnished by the Village of Streamwood

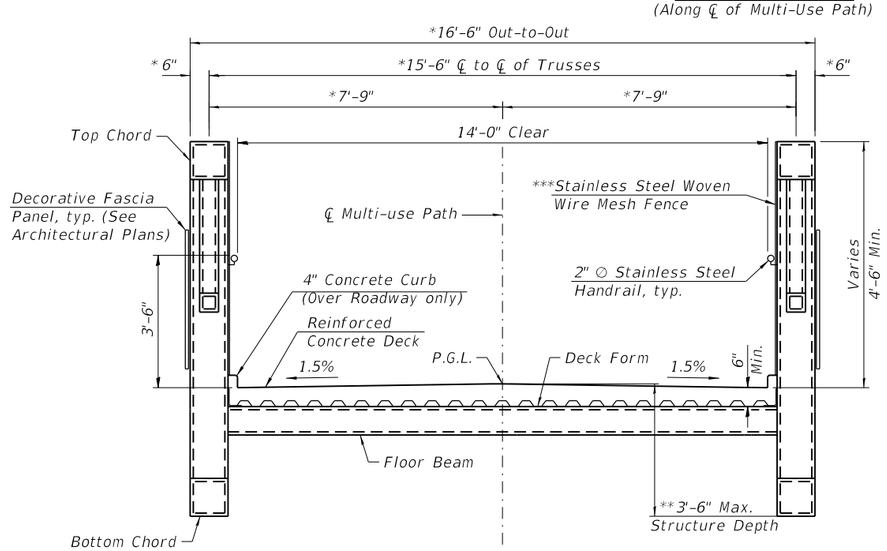

CROSS SECTION THRU TRUSS OVER 207FT SPAN

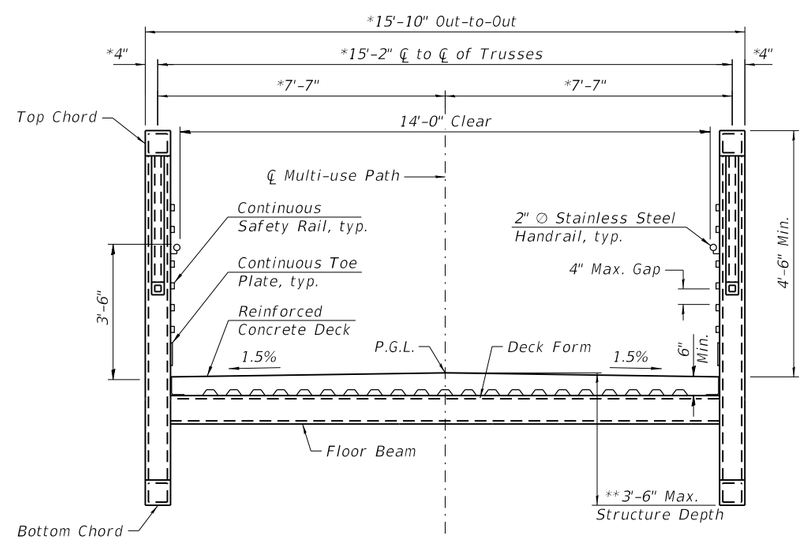

CROSS SECTION THRU TRUSS OVER 105FT SPAN

TRUSS MANUFACTURER

The substructure is designed per AASHTO LRFD and based on the assumed truss dead loads (including deck) shown below.

Total factored superstructure dead load at Pier 33 = 103,000 pounds
Total factored superstructure dead load at Pier 34 = 171,200 pounds
Total factored superstructure dead load at Pier 35 = 254,400 pounds
Total factored superstructure dead load at Pier 36 = 254,400 pounds
Total factored superstructure dead load at Pier 37 = 171,200 pounds
Total factored superstructure dead load at Pier 38 = 103,000 pounds

Truss manufacturer shall camber the truss as necessary to provide allowance for dead load deflection.

Bridge bearing seat elevations are subject to revision based on the approved Pedestrian Truss Superstructure shop drawings. Contractor shall verify all dimensions and elevations with final shop drawings.

Truss manufacturer shall provide the reinforced concrete deck design. Concrete deck to utilize stay-in-place galvanized forms. Reinforcement shall be epoxy coated. Contractor shall place the concrete deck after truss is set. Cost included with Pedestrian Truss Superstructure.

* Subject to refinement per Truss Manufacturer.
** Structure depth does not include height of bearing. Truss supplier shall provide joint covers over all open joints between span units and at Piers 33 and 38 (typ. 6 locations).
*** Cost included with Pedestrain Truss Superstructure.

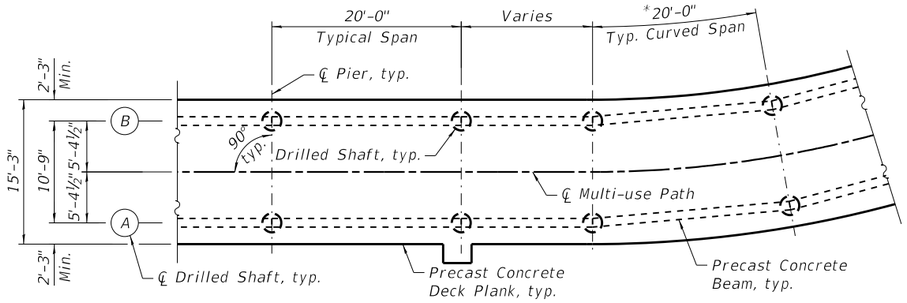

PLAN - TYPICAL BOARDWALK

(Steel Railing not shown for clarity)

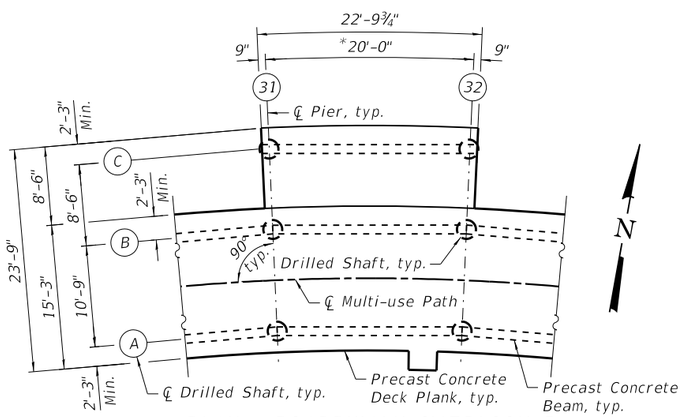

PLAN - BOARDWALK OVERLOOK B

(Steel Railing not shown for clarity)

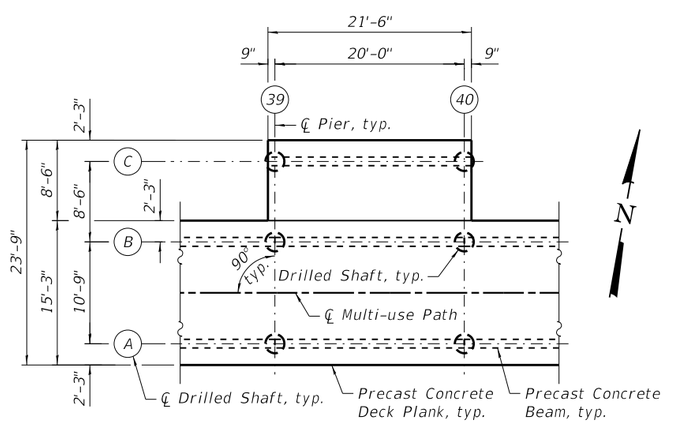

PLAN - BOARDWALK OVERLOOK C

(Steel Railing not shown for clarity)

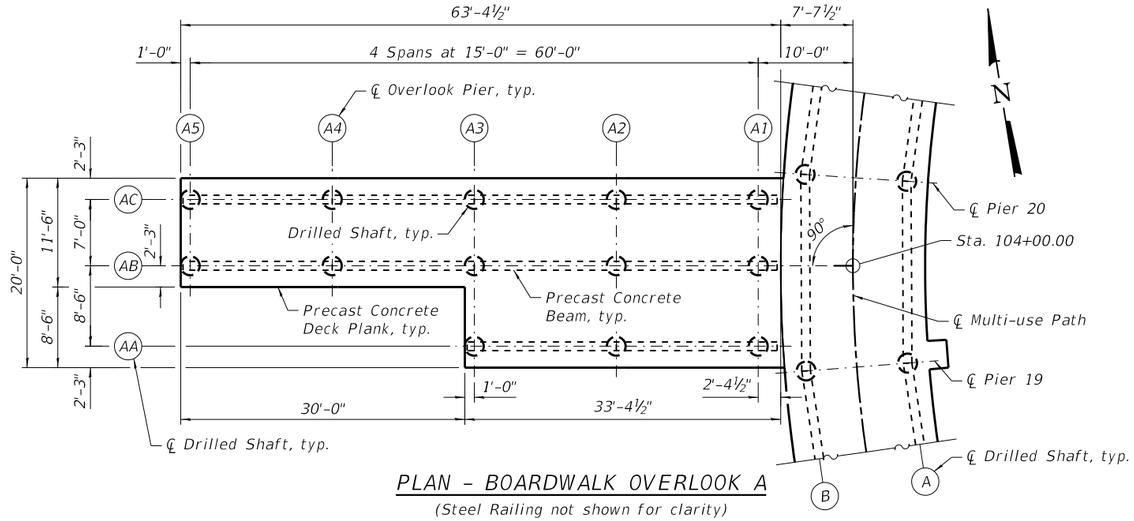

PLAN - BOARDWALK OVERLOOK A

(Steel Railing not shown for clarity)

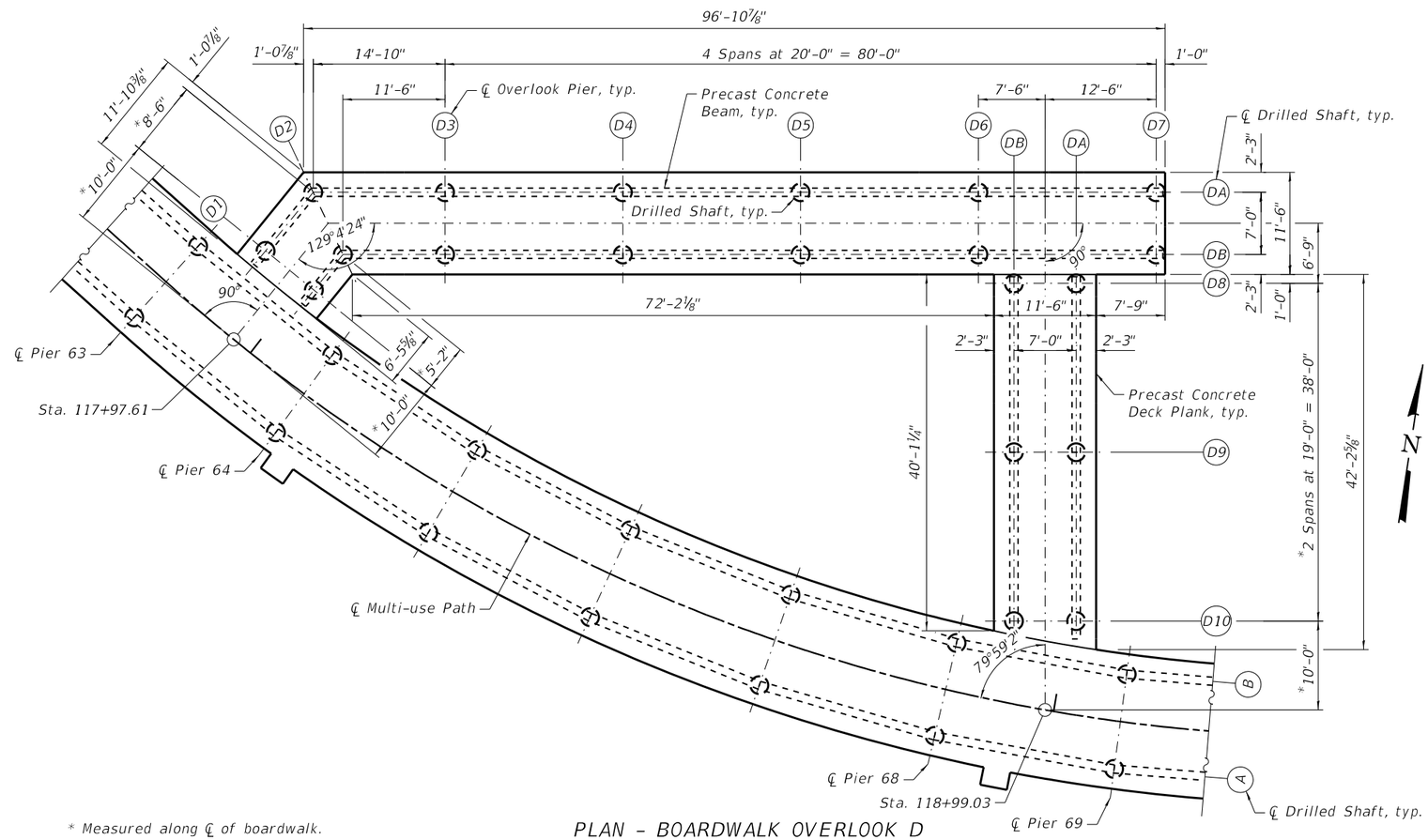

* Measured along ℄ of boardwalk.

PLAN - BOARDWALK OVERLOOK D

(Steel Railing not shown for clarity)

MODEL: Default
FILE NAME: pw:\\bg-pwint01.a-e.transyscorp.com:transyscorp-pw1\Documents\Projects_2021\CH401 - Chicago\P401210087 - Streamwood - Pedestrian Bridge over IL 59 - Phase II\304.00 - Bridge\304.01 - Standard Sheets\BRDPLN &slash; BOARDWALK PLAN

5/23/2023 3:11:38 PM

TRANSYSTEMS

USER NAME = lmnainggolan	DESIGNED - WJC	REVISED -	
	CHECKED - JE	REVISED -	
PLOT SCALE = 16.0000 ' / in.	DRAWN - WJC	REVISED -	
PLOT DATE = 5/23/2023	CHECKED - JE	REVISED -	

STATE OF ILLINOIS
DEPARTMENT OF TRANSPORTATION

BOARDWALK PLAN
STRUCTURE NO. 016-8309

SHEET 5 OF 29 SHEETS

F.A.P. RTE.	SECTION	COUNTY	TOTAL SHEETS	SHEET NO.
338	21-00067-00-BR	COOK	90	54
		CONTRACT NO. 61J67		
		ILLINOIS	FED. AID PROJECT	

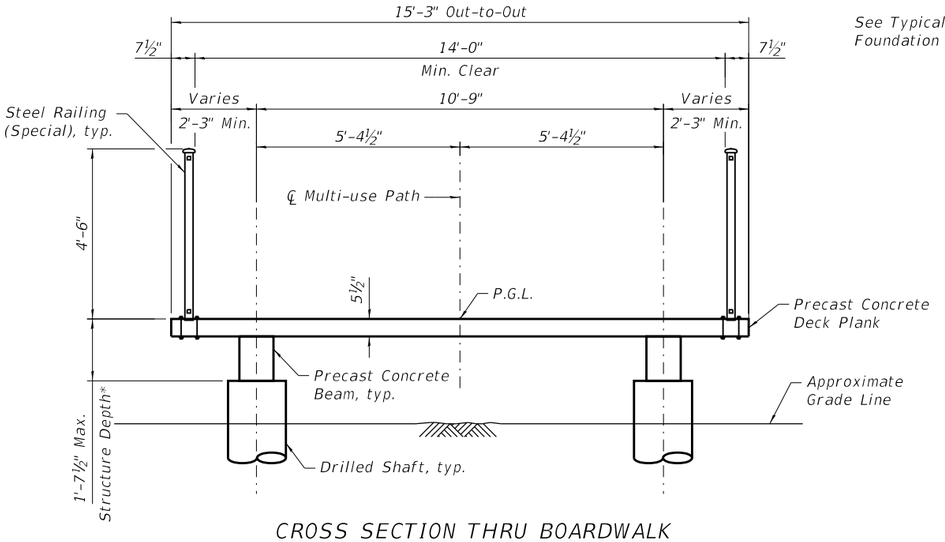

CROSS SECTION THRU BOARDWALK

*Subject to refinement per precast manufacturer

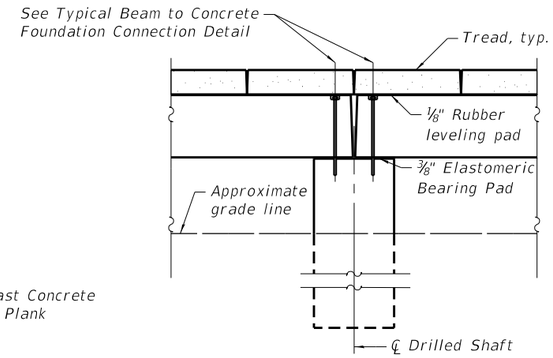

TYPICAL PIER CONNECTION DETAIL

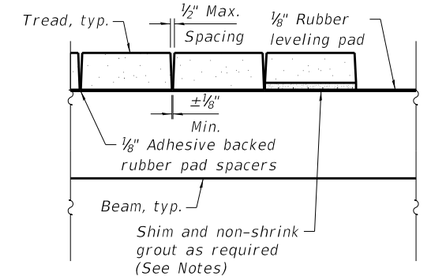

TYPICAL SHIM/GROUT (UNDER TREAD) & TREAD SPACING DETAIL

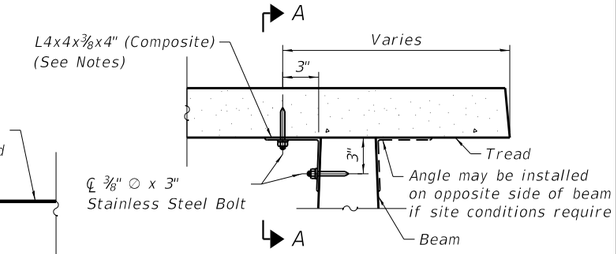

TREAD TO BEAM CONNECTION

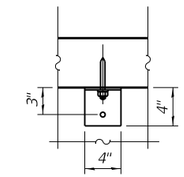

SECTION A-A

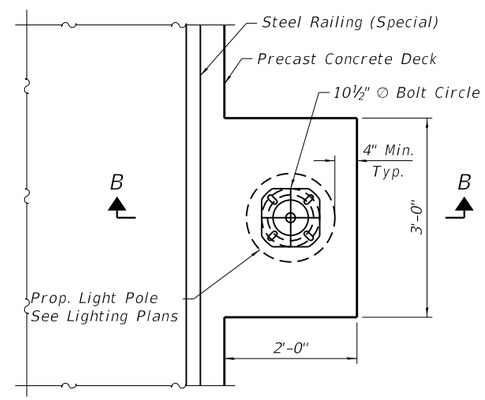

LIGHT POLE CONNECTION DETAIL

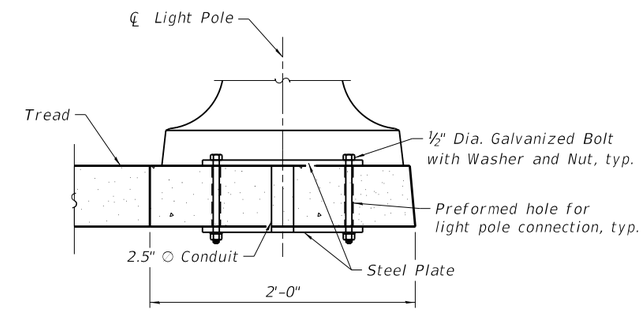

SECTION B-B

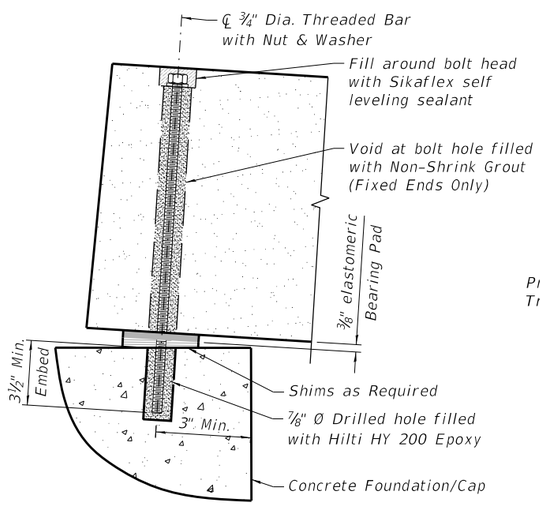

TYPICAL BEAM TO CONCRETE FOUNDATION CONNECTION DETAIL

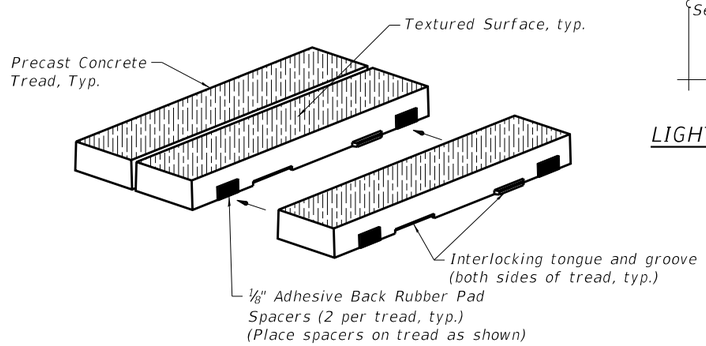

TYPICAL TREAD RUBBER SPACING DETAIL

Notes:

For railing details, see Sheet 56

Due to tolerances and variance in precast production and installation accuracy, shimming and grouting may be required. Where required, the entire bearing area and void shall be shimmed and grouted with non-shrink grout.

All holes in precast shall be drilled by contractor.

Drilled holes in precast shall be ⅜" ○ and installed per manufacturer installation requirements.

Two clip angles are required at each tread.

Precast tread shall receive a slip resistant integral textured surface.

Textured surface shall only appear on the top surface of the treads and shall have no visible seams in any direction.

BILL OF MATERIAL

Item	Unit	Quantity
Boardwalk Structure	Sq. Ft.	25,242

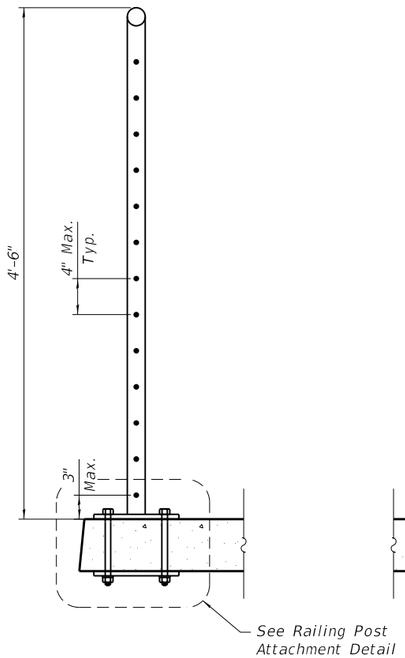

END ELEVATION

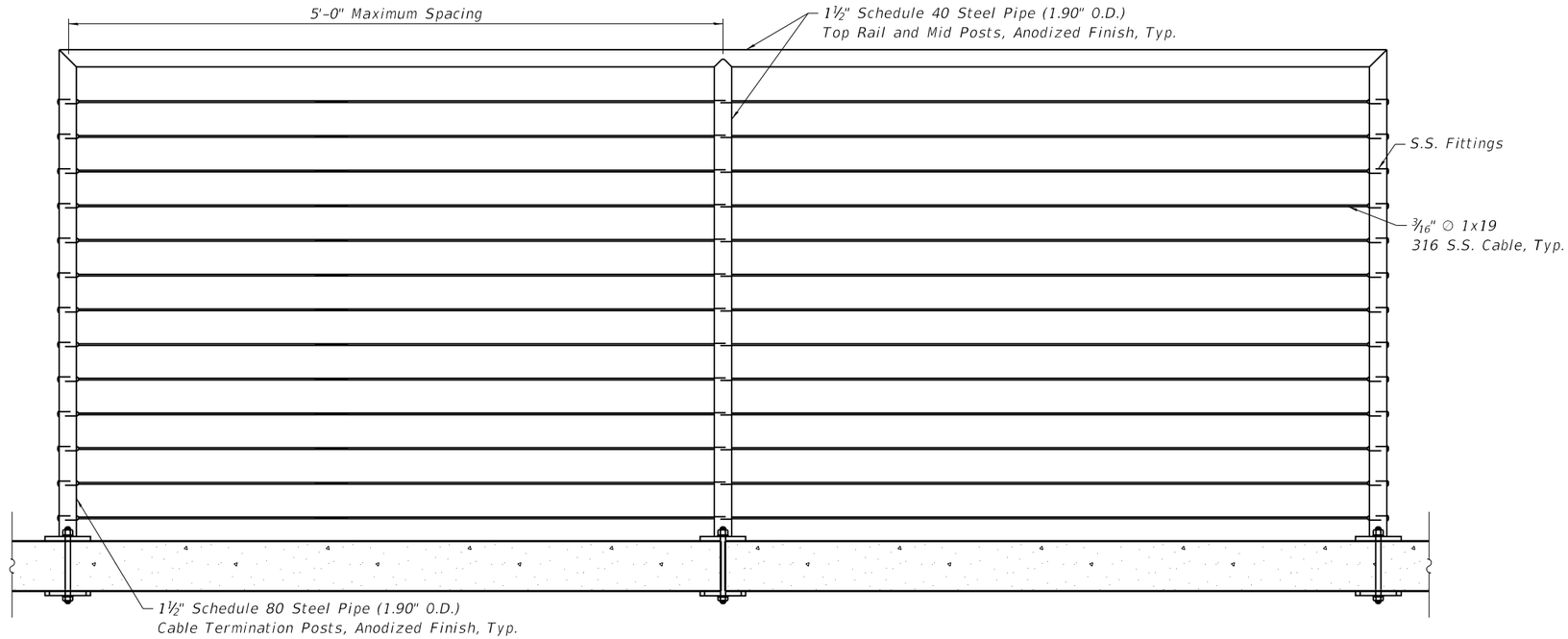

SIDE ELEVATION

TYPICAL CABLE RAILING DETAIL

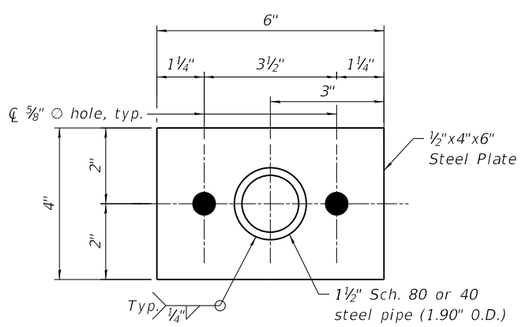

SECTION A-A

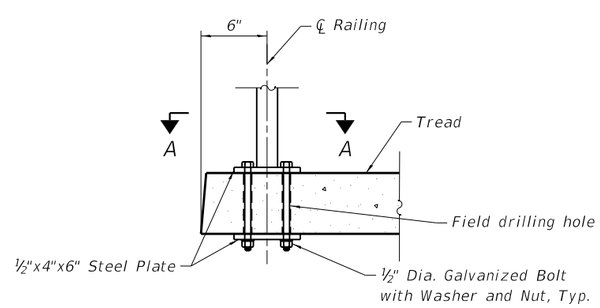

RAILING POST ATTACHMENT

Notes:

Edge distance shown in the details on this sheet are provided as structural minimums. The railing installer is responsible for ensuring that minimum clearance is maintained while installing the railing system.

Any damage to treads during field drilling of the railing connection to the treads is the responsibility of the railing installer.

BILL OF MATERIAL

Item	Unit	Quantity
Steel Railing (Special)	Foot	3,633

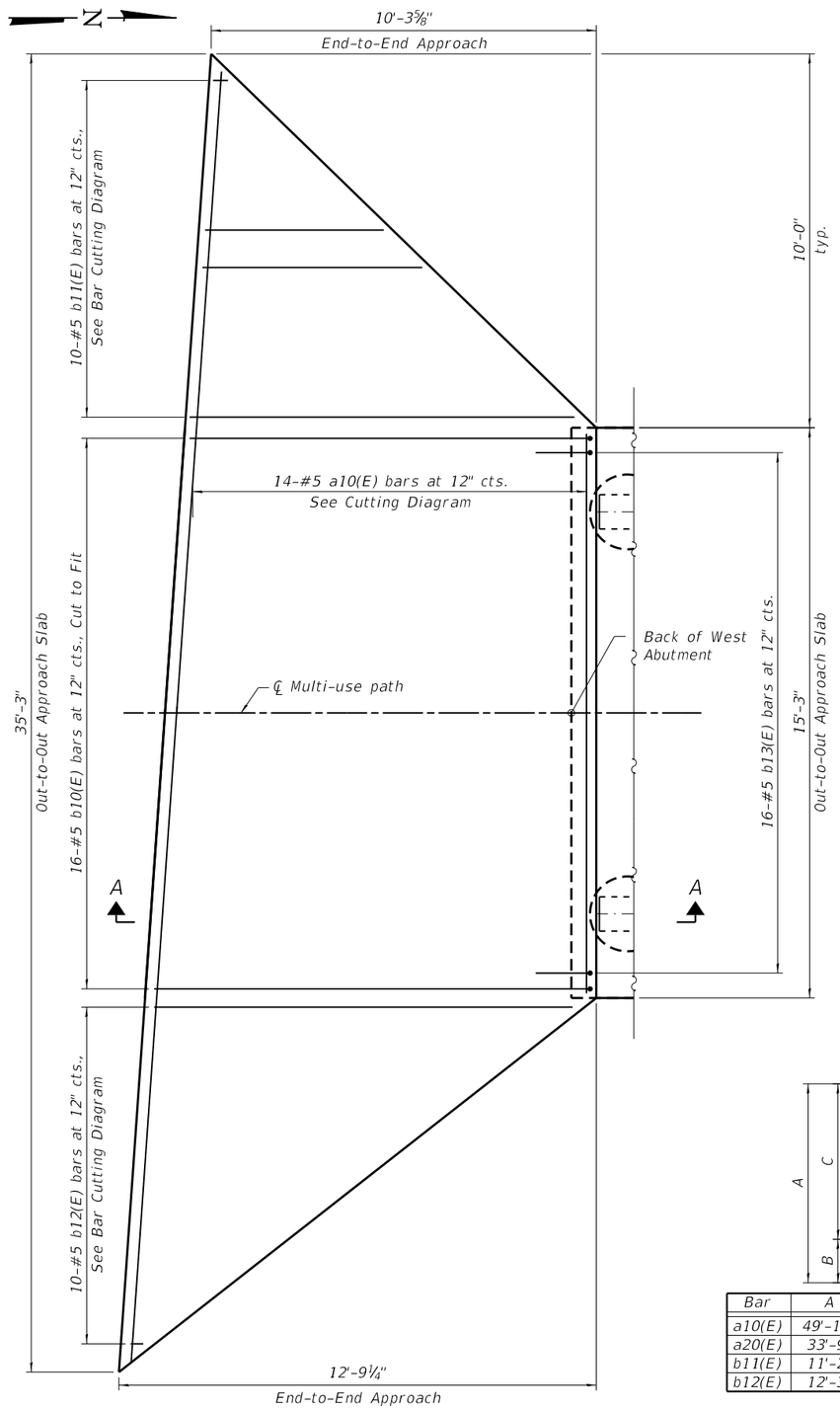

WEST APPROACH - PLAN

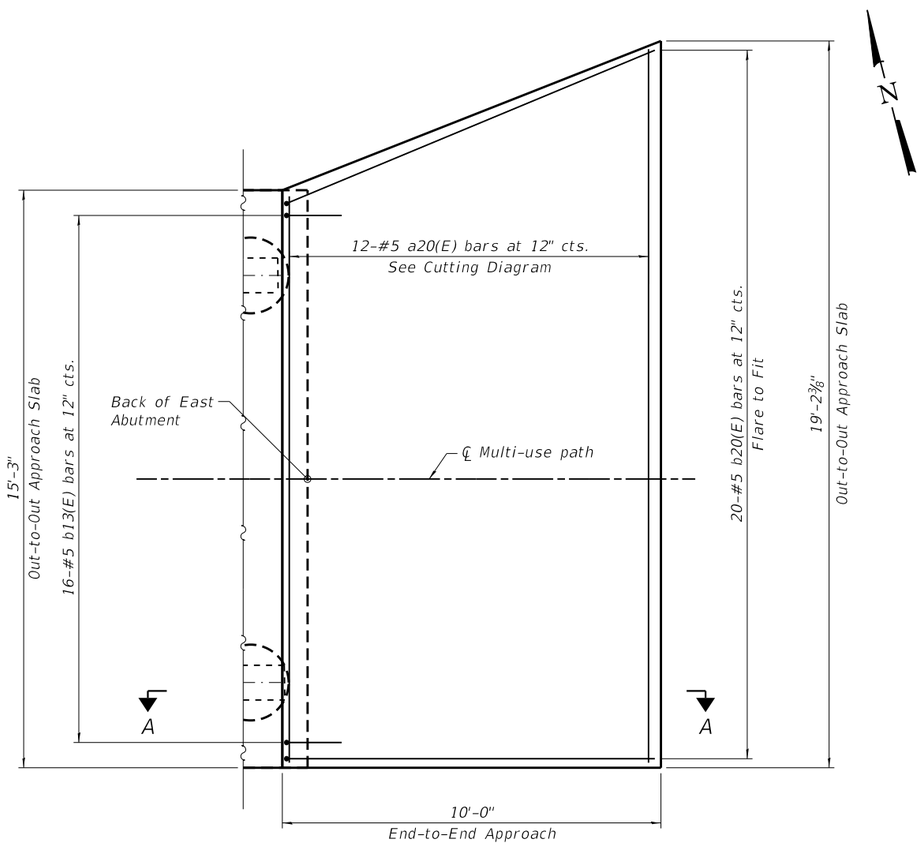

EAST APPROACH - PLAN

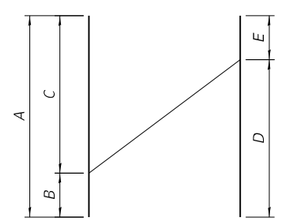

Bar	A	B	C	D	E
a10(E)	49'-10"	14'-11"	34'-11"	24'-10"	25'-0"
a20(E)	33'-9"	14'-11"	18'-10	16'-10"	16'-11"
b11(E)	11'-2"	0'-6"	10'-8"	5'-4"	5'-10"
b12(E)	12'-3"	0'-6"	11'-9"	5'-9"	6'-6"

BAR CUTTING DIAGRAM

BILL OF MATERIAL

Bar	No.	Size	Length	Shape
a10(E)	7	#5	49'-10"	
a11(E)	12	#5	14'-11"	
a20(E)	6	#5	33'-9"	
b10(E)	16	#5	12'-8"	
b11(E)	5	#5	11'-2"	
b12(E)	5	#5	12'-3"	
b13(E)	32	#5	4'-7"	
b20(E)	20	#5	10'-8"	
Concrete Superstructure (Approach Slab)			Cu. Yd.	9.5
Reinforcement Bars, Epoxy Coated			Pound	1,480

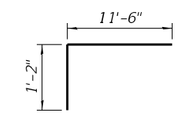

BAR b10(E)

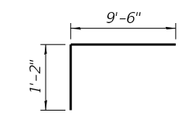

BAR b20(E)

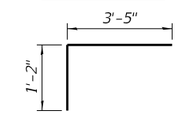

BAR b13(E)

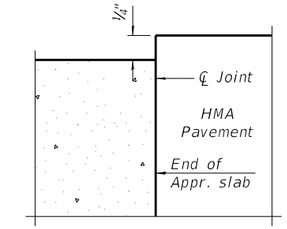

DETAIL A

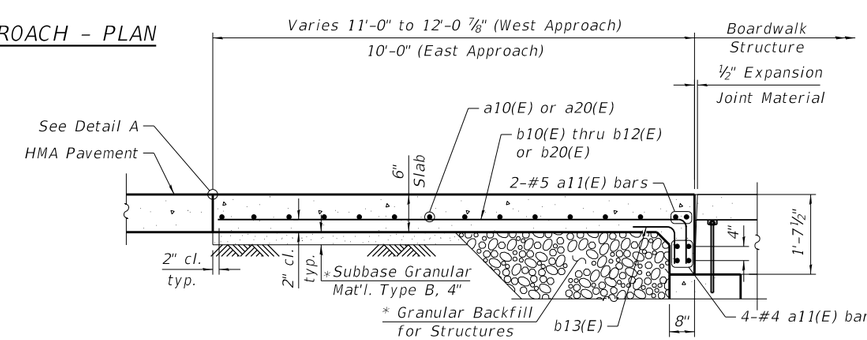

SECTION A-A

* Cost included with Concrete Superstructure (Approach Slab)

MODEL: Default
FILE NAME: pw:\\hq-pwint01.a-e.transyscorp.com:transyscorp-pw1\Documents\Projects_2021\CH401 - Chicago\P401210087 - Streamwood - Pedestrian Bridge over IL 59 - Phase II\304.00 - Bridge\304.01 - Standard Sheets\APDET &slash: BOARDWALK APPROACH SLAB DETAILS
5/23/2023 3:11:47 PM

TRANSYSTEMS

USER NAME = lmnainggolan	DESIGNED - JE	REVISED -	
	CHECKED - WJC	REVISED -	
PLOT SCALE = 4.0000 ' / in.	DRAWN - JE	REVISED -	
PLOT DATE = 5/23/2023	CHECKED - WJC	REVISED -	

STATE OF ILLINOIS
DEPARTMENT OF TRANSPORTATION

BOARDWALK APPROACH SLAB DETAILS
STRUCTURE NO. 016-8309

SHEET 8 OF 29 SHEETS

F.A.P. RTE.	SECTION	COUNTY	TOTAL SHEETS	SHEET NO.
338	21-00067-00-BR	COOK	90	57
		CONTRACT NO. 61J67		
		ILLINOIS	FED. AID PROJECT	

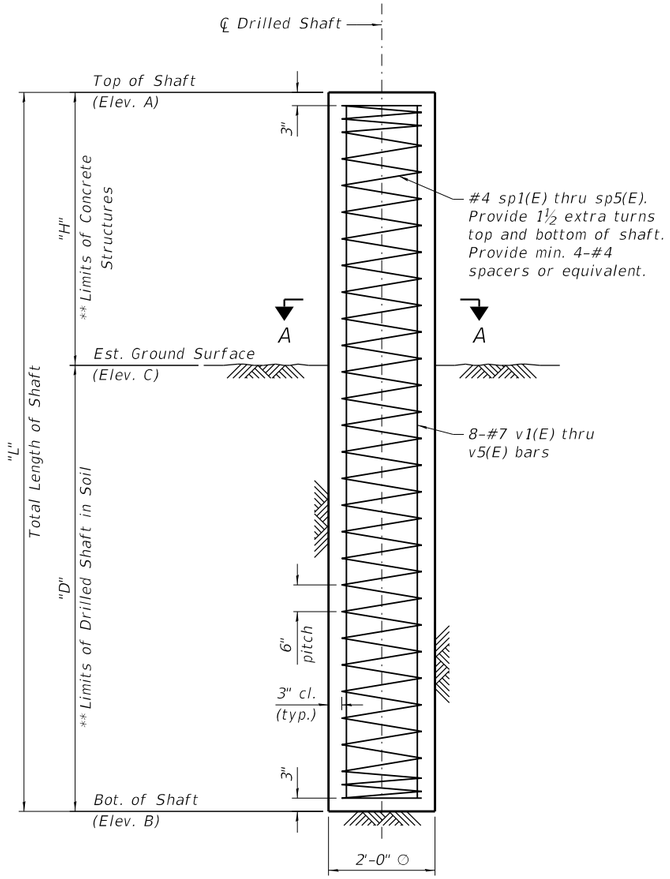

TYPICAL DRILLED SHAFT ELEVATION

** If the prevailing water surface elevation during construction is consistently different than estimated on the plans, the contractor may propose an adjustment to the top of the drilled shaft elevation as part of their installation procedure. The top of all drilled shafts within a substructure unit shall be constructed to the same elevation and extend above the prevailing water surface. The quantities and reinforcement detailing are based on the top of shaft and the estimated elevations shown and may change based on the actual elevations encountered at each shaft and the final top of shaft elevation.

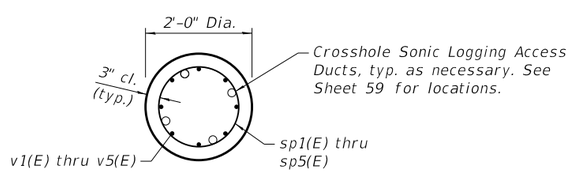

SECTION A-A

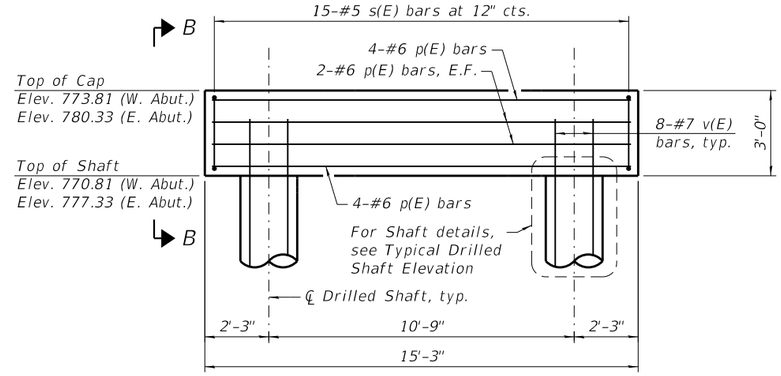

BOARDWALK ABUTMENT ELEVATION

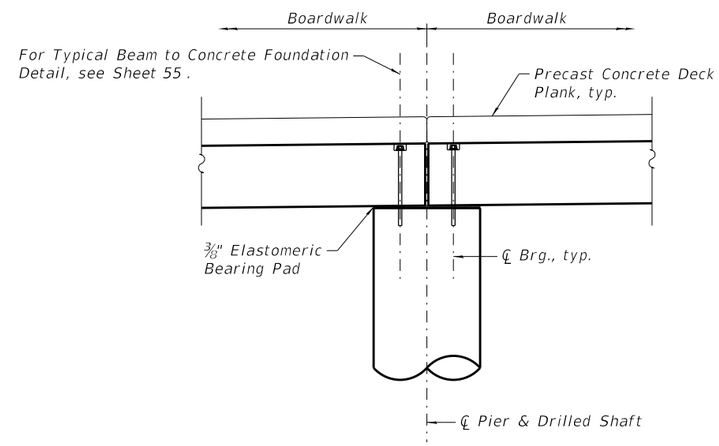

TYPICAL SECTION THRU PIER

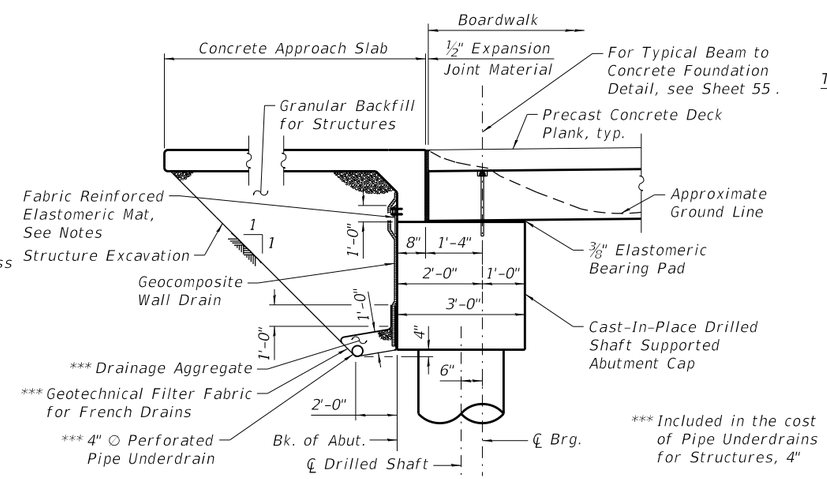

TYPICAL SECTION THRU ABUTMENT

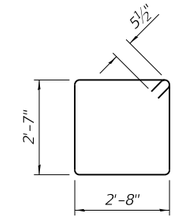

BAR s(E)

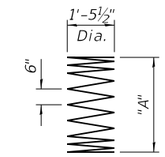

BARS sp1(E) THRU sp5(E)

Bar	"A"
sp1(E)	55'-6"
sp2(E)	49'-6"
sp3(E)	39'-6"
sp4(E)	29'-6"
sp5(E)	24-'6"

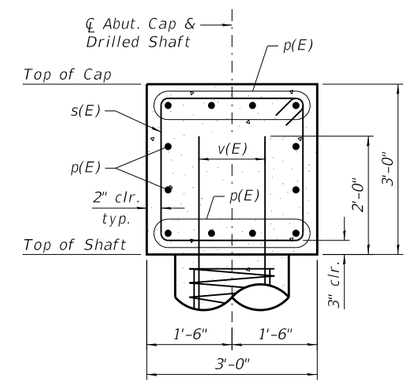

SECTION B-B

ABUTMENT CAPS BILL OF MATERIAL

Bar	No.	Size	Length	Shape
p(E)	24	#6	14'-11"	———
s(E)	30	#5	11'-5"	□
v(E)	32	#7	7'-9"	———
Structure Excavation			Cu. Yd.	20
Concrete Structures			Cu. Yd.	10.2
Reinforcement Bars, Epoxy Coated			Pound	1,410
Granular Backfill for Structures			Cu. Yd.	18
Concrete Sealer			Sq. Ft.	311
Geocomposite Wall Drain			Sq. Yd.	14
Pipe Underdrains for Structures, 4"			Foot	31

DRILLED SHAFTS BILL OF MATERIAL

	Bar	No.	Size	Length	Shape
*	sp1(E)	45	#4	55'-6"	∧∧∧∧
*	sp2(E)	38	#4	49'-6"	∧∧∧∧
*	sp3(E)	24	#4	39'-6"	∧∧∧∧
*	sp4(E)	54	#4	29'-6"	∧∧∧∧
*	sp5(E)	38	#4	24-'6"	∧∧∧∧
	v1(E)	360	#7	55'-6"	———
	v2(E)	304	#7	49'-6"	———
	v3(E)	192	#7	39'-6"	———
	v4(E)	432	#7	29'-6"	———
	v5(E)	304	#7	24-'6"	———
	Concrete Structures			Cu. Yd.	175.7
	Reinforcement Bars, Epoxy Coated			Pound	175,350
	Drilled Shaft in Soil			Cu. Yd.	760.6
	Crosshole Sonic Logging Access Ducts			Foot	2,020
	Crosshole Sonic Logging Testing			Each	6

* Length is height of spiral.

MINIMUM BAR LAPS

Bar	Lap
#7	5'-6"

Notes:

Concrete drilled shaft and column shall be placed monolithically, without construction joints.

A normal surface finish followed by a Concrete Sealer application will be required on concrete surfaces above the lowest elevation 6" below finished ground line. Cost included with Concrete Structures.

When splicing spiral reinforcement is necessary, the spiral shall be provided with 1½ extra turns at the ends to be spliced. These additional turns shall either be welded together according to AWS D1.4 or shall both terminate with a 135° standard hook.

Fabric Reinforced Elastomeric Mat shall be according to Section 1028 of the Standard Specifications. Fabric mat shall be 24" wide & attached full width and vertically at edges to the abutment cap with a ⅜" x 5" steel plate and ½" ∅ studs with nuts and washers at 12" cts. Cost included with Concrete Structures.

DRILLED SHAFT SCHEDULE - WEST BOARDWALK APPROACH

Pier No.	Station	Number of Shafts	Top of Shaft (Elev. A)	Bot. of Shaft (Elev. B)	Est. Ground Surface (Elev. C)	Total Length "L"	Exposed Height "H"	Embedded Depth "D"	Shaft Group No.	Concrete Structures (Cu. Yd.)	Drilled Shaft in Soil (Cu. Yd.)
W. Abut.	100+14.92	2	770.81	740.81	774.39	30.00	0.00	30.00	4	0.0	7.0
1	100+35.42	2	773.78	743.78	774.33	30.00	0.00	30.00	4	0.0	7.0
2	100+55.42	2	774.01	744.01	773.99	30.00	0.08	29.92	4	0.1	7.0
3	100+75.42	2	774.51	744.51	774.14	30.00	0.42	29.58	4	0.1	6.9
4	100+95.42	2	775.27	745.27	774.11	30.00	1.17	28.83	4	0.3	6.8
5	101+15.42	2	776.21	726.21	774.01	50.00	2.25	47.75	2	0.6	11.2
6	101+35.42	2	777.16	727.16	774.06	50.00	3.17	46.83	2	0.8	10.9
7	101+49.29	2	777.82	727.82	774.04	50.00	3.83	46.17	2	0.9	10.8
8	101+69.29	2	778.77	728.77	774.27	50.00	4.50	45.50	2	1.1	10.6
9	101+89.29	2	779.69	729.69	774.09	50.00	5.67	44.33	2	1.4	10.4
10	102+09.29	2	780.47	724.47	773.97	56.00	6.50	49.50	1	1.6	11.6
11	102+29.29	2	781.11	725.11	773.99	56.00	7.17	48.83	1	1.7	11.4
12	102+49.29	2	781.61	725.61	773.94	56.00	7.67	48.33	1	1.8	11.3
13	102+69.30	2	781.97	725.97	774.00	56.00	8.00	48.00	1	1.9	11.2
14	102+89.30	2	782.19	726.19	774.04	56.00	8.17	47.83	1	2.0	11.2
15	103+09.30	2	782.27	726.27	774.12	56.00	8.17	47.83	1	2.0	11.2
16	103+29.30	2	782.21	726.21	773.97	56.00	8.25	47.75	1	2.0	11.2
17	103+49.30	2	782.12	726.12	774.02	56.00	8.17	47.83	1	2.0	11.2
18	103+69.30	2	782.08	726.08	773.89	56.00	8.25	47.75	1	2.0	11.2
19	103+89.30	2	782.12	726.12	773.72	56.00	8.42	47.58	1	2.0	11.1
20	104+09.30	2	782.23	726.23	773.73	56.00	8.58	47.42	1	2.0	11.1
21	104+29.30	2	782.41	732.41	773.78	50.00	8.67	41.33	2	2.1	9.7
22*	104+49.30	2	782.65	732.65	773.55	50.00	9.17	40.83	2	2.2	9.6
23*	104+69.30	2	782.97	732.97	773.55	50.00	9.50	40.50	2	2.3	9.5
24*	104+89.30	2	783.36	733.36	774.03	50.00	9.33	40.67	2	2.2	9.5
25*	105+09.30	2	783.82	733.82	773.66	50.00	10.17	39.83	2	2.4	9.3
26*	105+29.30	2	784.34	728.34	774.02	56.00	10.33	45.67	1	2.5	10.7
27*	105+49.17	2	784.94	728.94	774.14	56.00	10.83	45.17	1	2.6	10.6
28*	105+69.16	2	785.60	729.60	773.67	56.00	12.00	44.00	1	2.8	10.3
29*	105+89.16	2	786.34	730.34	773.72	56.00	12.67	43.33	1	3.0	10.1
30*	106+09.16	2	787.15	731.15	774.14	56.00	13.08	42.92	1	3.1	10.0
31*	106+29.16	3	788.03	738.03	773.69	50.00	14.33	35.67	2	5.1	12.5
32*	106+49.16	3	788.97	738.97	773.92	50.00	15.08	34.92	2	5.3	12.2

DRILLED SHAFT SCHEDULE - OVERLOOK D

Drilled Shaft No.	Station	Offset	Top of Shaft (Elev. A)	Bot. of Shaft (Elev. B)	Est. Ground Surface (Elev. C)	Total Length "L"	Exposed Height "H"	Embedded Depth "D"	Shaft Group No.	Concrete Structures (Cu. Yd.)	Drilled Shaft in Soil (Cu. Yd.)
D1-DA	117+93.92	9.97' Lt.	782.99	752.99	777.18	30.00	5.83	24.17	4	0.7	2.9
D1-DB	118+01.29	9.97' Lt.	782.99	752.99	777.18	30.00	5.83	24.17	4	0.7	2.9
D2-DA	117+93.74	18.47' Lt.	782.94	752.94	777.18	30.00	5.83	24.17	4	0.7	2.9
D2-DB	118+01.39	15.13' Lt.	782.94	752.94	777.18	30.00	5.83	24.17	4	0.7	2.9
D3-DA	118+06.91	27.66' Lt.	782.84	752.84	777.18	30.00	5.67	24.33	4	0.7	2.9
D3-DB	118+11.58	21.98' Lt.	782.84	752.84	777.18	30.00	5.67	24.33	4	0.7	2.9
D4-DA	118+26.90	38.73' Lt.	782.70	757.70	777.18	25.00	5.58	19.42	5	0.7	2.3
D4-DB	118+31.17	32.67' Lt.	782.70	757.70	777.18	25.00	5.58	19.42	5	0.7	2.3
D5-DA	118+49.58	47.96' Lt.	782.56	757.56	777.18	25.00	5.42	19.58	5	0.7	2.3
D5-DB	118+53.20	41.55' Lt.	782.56	757.56	777.18	25.00	5.42	19.58	5	0.7	2.3
D6-DA	118+74.81	55.00' Lt.	782.42	757.42	777.18	25.00	5.25	19.75	5	0.7	2.3
D6-DB	118+77.50	48.29' Lt.	782.42	757.42	777.18	25.00	5.25	19.75	5	0.7	2.3
D7-DA	119+02.13	59.52' Lt.	782.42	757.42	777.18	25.00	5.25	19.75	5	0.7	2.3
D7-DB	119+03.64	52.61' Lt.	782.42	757.42	777.18	25.00	5.25	19.75	5	0.7	2.3
D8-DA	118+92.59	47.80' Lt.	782.42	757.42	777.18	25.00	5.25	19.75	5	0.7	2.3
D8-DB	118+83.68	46.21' Lt.	782.42	757.42	777.18	25.00	5.25	19.75	5	0.7	2.3
D9-DA	118+97.16	29.16' Lt.	782.28	757.28	777.18	25.00	5.17	19.83	5	0.7	2.4
D9-DB	118+89.17	27.74' Lt.	782.28	757.28	777.18	25.00	5.17	19.83	5	0.7	2.4
D10-DA	119+00.83	10.45' Lt.	782.15	757.15	777.18	25.00	5.00	20.00	5	0.6	2.4
D10-DB	118+93.59	9.17' Lt.	782.15	757.15	777.18	25.00	5.00	20.00	5	0.6	2.4

*Indicates piers where Crosshole Sonic Logging Access Ducts shall be installed in the shafts.

DRILLED SHAFT SCHEDULE - EAST BOARDWALK APPROACH

Pier No.	Station	Number of Shafts	Top of Shaft (Elev. A)	Bot. of Shaft (Elev. B)	Est. Ground Surface (Elev. C)	Total Length "L"	Exposed Height "H"	Embedded Depth "D"	Shaft Group No.	Concrete Structures (Cu. Yd.)	Drilled Shaft in Soil (Cu. Yd.)
39*	113+11.93	3	789.01	739.01	774.23	50.00	14.83	35.17	2	5.2	12.3
40*	113+31.93	3	788.06	738.06	774.12	50.00	14.00	36.00	2	4.9	12.6
41*	113+51.93	2	787.10	737.10	774.29	50.00	12.83	37.17	2	3.0	8.7
42*	113+71.93	2	786.21	736.21	774.43	50.00	11.83	38.17	2	2.8	8.9
43*	113+91.93	2	785.40	735.40	774.47	50.00	11.00	39.00	2	2.6	9.1
44*	114+11.93	2	784.69	744.69	774.30	40.00	10.42	29.58	3	2.5	6.9
45*	114+31.93	2	784.07	744.07	774.41	40.00	9.67	30.33	3	2.3	7.1
46	114+51.93	2	783.55	743.55	774.63	40.00	8.92	31.08	3	2.1	7.3
47	114+71.93	2	783.11	743.11	774.69	40.00	8.50	31.50	3	2.0	7.4
48	114+91.93	2	782.77	742.77	774.57	40.00	8.25	31.75	3	2.0	7.4
49	115+11.93	2	782.52	742.52	774.52	40.00	8.00	32.00	3	1.9	7.5
50	115+31.93	2	782.36	742.36	774.28	40.00	8.08	31.92	3	1.9	7.5
51	115+51.93	2	782.29	742.29	774.22	40.00	8.08	31.92	3	1.9	7.5
52	115+71.93	2	782.31	742.31	774.24	40.00	8.08	31.92	3	1.9	7.5
53	115+91.93	2	782.43	742.43	774.44	40.00	8.00	32.00	3	1.9	7.5
54	116+11.93	2	782.62	742.62	774.70	40.00	8.00	32.00	3	1.9	7.5
55	116+31.93	2	782.82	742.82	775.16	40.00	7.67	32.33	3	1.8	7.6
56	116+51.93	2	782.99	757.99	775.48	25.00	7.58	17.42	5	1.8	4.1
57	116+71.93	2	783.11	758.11	776.00	25.00	7.17	17.83	5	1.7	4.2
58	116+91.93	2	783.20	758.20	776.29	25.00	6.92	18.08	5	1.7	4.3
59	117+11.93	2	783.25	758.25	776.39	25.00	6.92	18.08	5	1.7	4.3
60	117+31.93	2	783.25	753.25	776.23	30.00	7.08	22.92	4	1.7	5.4
61	117+51.93	2	783.22	753.22	776.51	30.00	6.75	23.25	4	1.6	5.5
62	117+69.77	2	783.15	753.15	776.78	30.00	6.42	23.58	4	1.5	5.5
63	117+87.61	2	783.06	753.06	777.23	30.00	5.83	24.17	4	1.4	5.7
64	118+07.61	2	782.91	752.91	777.44	30.00	5.50	24.50	4	1.3	5.8
65	118+27.61	2	782.73	752.73	777.41	30.00	5.33	24.67	4	1.3	5.8
66	118+47.61	2	782.53	757.53	777.10	25.00	5.50	19.50	5	1.3	4.6
67	118+67.61	2	782.34	757.34	776.72	25.00	5.67	19.33	5	1.4	4.5
68	118+87.61	2	782.20	757.20	777.47	25.00	4.75	20.25	5	1.2	4.8
69	119+07.61	2	782.09	757.09	776.89	25.00	5.25	19.75	5	1.3	4.6
70	119+27.61	2	782.03	757.03	776.40	25.00	5.67	19.33	5	1.4	4.5
71	119+47.61	2	782.01	757.01	776.34	25.00	5.67	19.33	5	1.4	4.5
72	119+67.61	2	782.02	752.02	776.22	30.00	5.83	24.17	4	1.4	5.7
73	119+87.61	2	782.08	752.08	776.10	30.00	6.00	24.00	4	1.4	5.6
74	120+07.61	2	782.17	752.17	776.22	30.00	6.00	24.00	4	1.4	5.6
75	120+27.61	2	782.31	752.31	776.15	30.00	6.17	23.83	4	1.5	5.6
76	120+47.61	2	782.48	752.48	775.63	30.00	6.92	23.08	4	1.7	5.4
77	120+67.61	2	782.68	752.68	775.83	30.00	6.92	23.08	4	1.7	5.4
78	120+87.61	2	782.86	752.86	776.02	30.00	6.92	23.08	4	1.7	5.4
79	121+07.61	2	782.93	752.93	775.94	30.00	7.00	23.00	4	1.7	5.4
80	121+27.61	2	782.88	752.88	776.10	30.00	6.83	23.17	4	1.6	5.4
81	121+47.61	2	782.71	752.71	776.12	30.00	6.67	23.33	4	1.6	5.5
82	121+67.61	2	782.42	752.42	776.30	30.00	6.17	23.83	4	1.5	5.6
83	121+87.61	2	782.02	752.02	776.38	30.00	5.67	24.33	4	1.4	5.7
84	122+07.61	2	781.50	751.50	776.72	30.00	4.83	25.17	4	1.2	5.9
85	122+27.61	2	780.87	755.87	777.12	25.00	3.75	21.25	5	0.9	5.0
E. Abut.	122+43.27	2	777.33	752.33	777.71	25.00	0.00	25.00	5	0.0	5.9

DRILLED SHAFT SCHEDULE - OVERLOOK A

Drilled Shaft No.	Station	Offset	Top of Shaft (Elev. A)	Bot. of Shaft (Elev. B)	Est. Ground Surface (Elev. C)	Total Length "L"	Exposed Height "H"	Embedded Depth "D"	Shaft Group No.	Concrete Structures (Cu. Yd.)	Drilled Shaft in Soil (Cu. Yd.)
A1-AA	103+92.08	10.24' Lt.	782.17	726.17	773.72	56.00	8.50	47.50	1	1.0	5.6
A1-AB	104+00.00	10.00' Lt.	782.17	726.17	773.72	56.00	8.50	47.50	1	1.0	5.6
A1-AC	104+06.52	10.17' Lt.	782.17	726.17	773.72	56.00	8.50	47.50	1	1.0	5.6
A2-AA	103+92.81	25.22' Lt.	782.17	726.17	773.72	56.00	8.50	47.50	1	1.0	5.6
A2-AB	104+00.00	25.00' Lt.	782.17	726.17	773.72	56.00	8.50	47.50	1	1.0	5.6
A2-AC	104+05.92	25.15' Lt.	782.17	726.17	773.72	56.00	8.50	47.50	1	1.0	5.6
A3-AA	103+93.42	40.20' Lt.	782.17	726.17	773.72	56.00	8.50	47.50	1	1.0	5.6
A3-AB	104+00.00	40.00' Lt.	782.17	726.17	773.72	56.00	8.50	47.50	1	1.0	5.6
A3-AC	104+05.42	40.14' Lt.	782.17	726.17	773.72	56.00	8.50	47.50	1	1.0	5.6
A4-AB	104+00.00	55.00' Lt.	782.17	726.17	773.72	56.00	8.50	47.50	1	1.0	5.6
A4-AC	104+05.00	55.13' Lt.	782.17	726.17	773.72	56.00	8.50	47.50	1	1.0	5.6
A5-AB	104+00.00	70.00' Lt.	782.17	726.17	773.72	56.00	8.50	47.50	1	1.0	5.6
A5-AC	104+04.64	70.12' Lt.	782.17	726.17	773.72	56.00	8.50	47.50	1	1.0	5.6

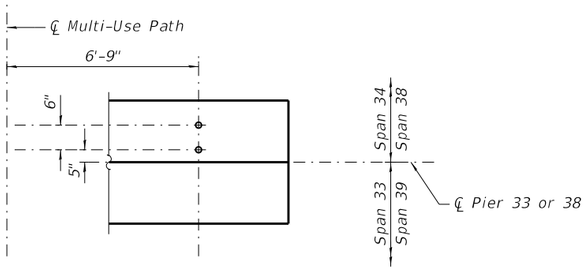

ANCHOR BOLT LAYOUT

(For information only. See Notes.)

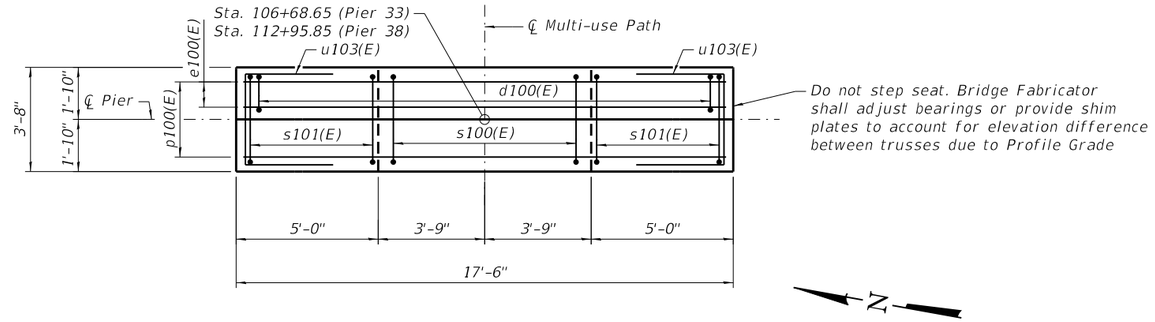

TOP PLAN

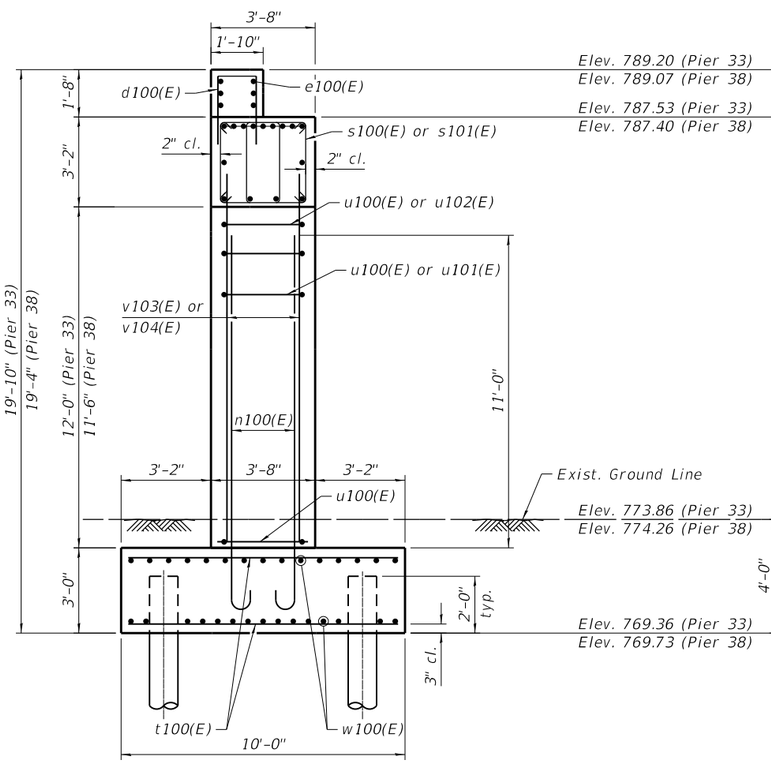

END VIEW

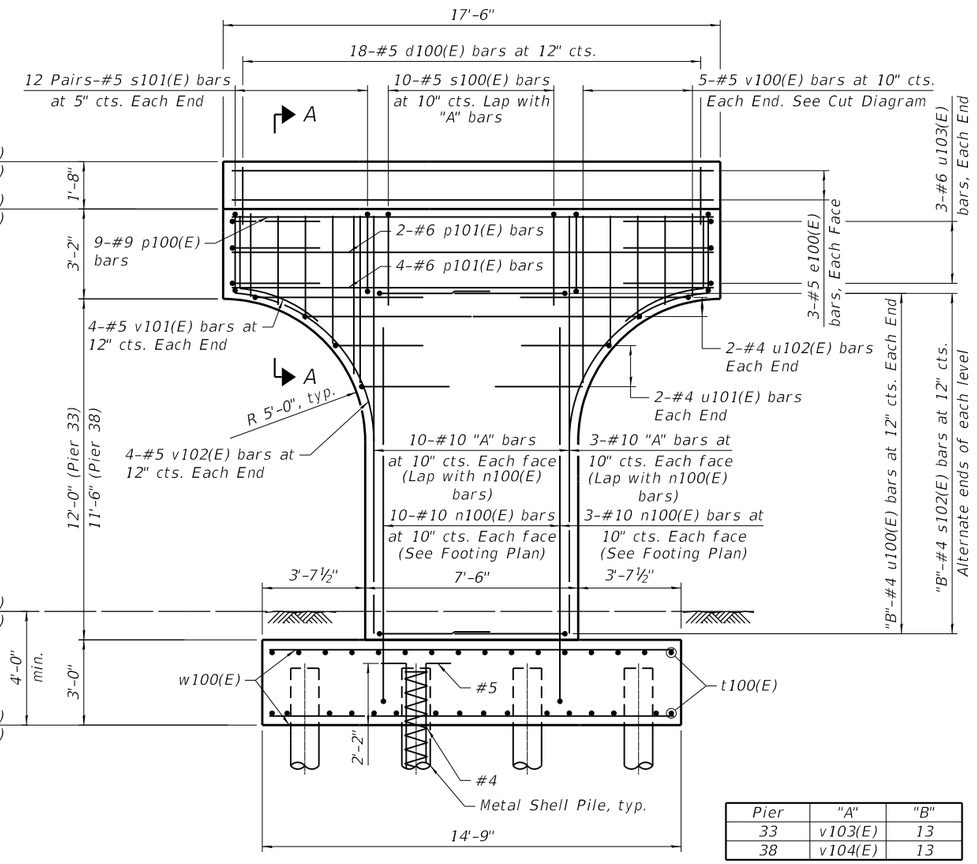

ELEVATION

(Looking Upstation)

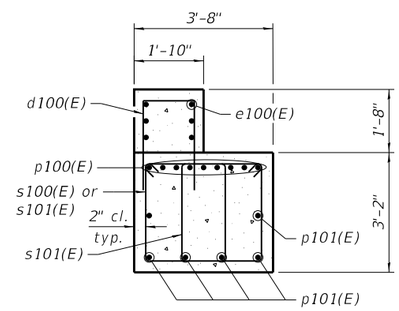

SECTION A-A

Pier	"A"	"B"
33	v103(E)	13
38	v104(E)	13

Notes:

For footing plan, bar bending diagrams, and Bill of Material, see sheet 61.

Concrete clear cover shall be 2" minimum unless noted otherwise

Truss fabricator shall determine size and location of anchor bolts. Cost included with Pedestrian Truss Superstructure.

All edges shall have standard ¾" chamfers except as noted.

Space reinforcement in cap to miss anchor bolts.

For details of piles, see sheet 66.

Concrete Sealer shall be applied to all exposed surfaces of the piers.

Truss fabricator shall provide a 1" nominal shim pack for each bearing consisting of a 1", ½", ¼" and 2-⅛" shim plates matching the dimnesions of the masonry plate provided, including holes for anchor bolts. Cost included in the cost of Pedestrian Truss Superstructure.

For Form Liner details, see Architectural Sheets.

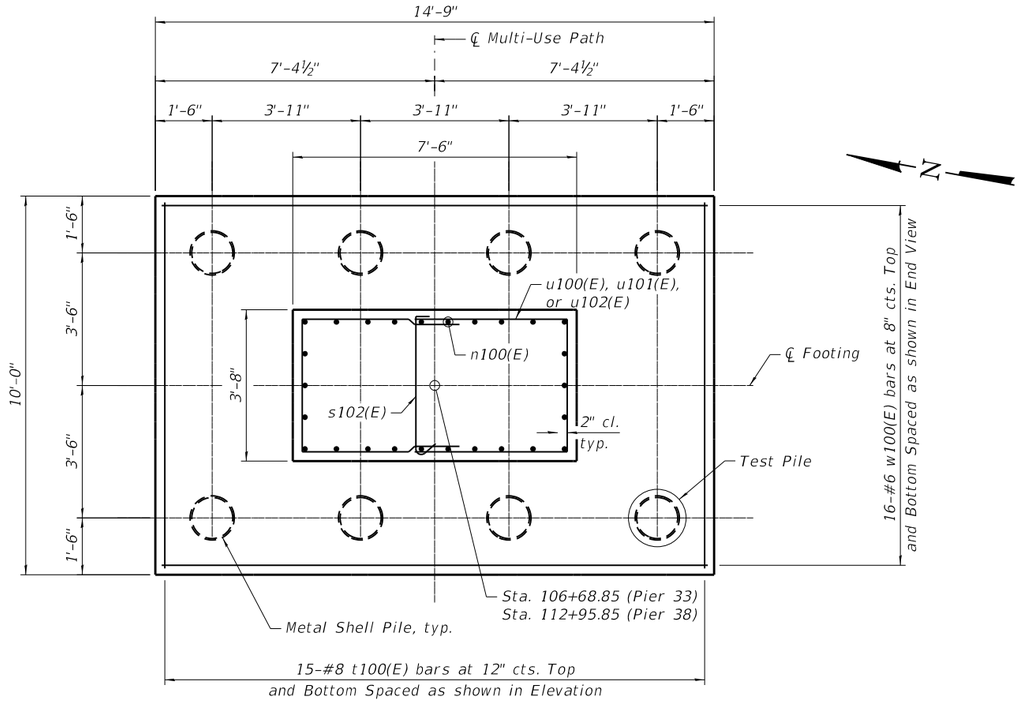

FOOTING PLAN

PILE DATA

Type: Metal Shell - 12 in. dia. x 0.250 in. walls
Nominal Required Bearing: 291 Kips
Factored Resistance Available: 160 Kips
Est. Length: 63 ft. (Pier 33)
49 ft. (Pier 38)
No. Production Piles: 7 per Pier
No. Test Piles: 1 per Pier

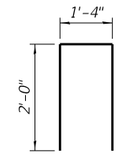

BAR d100(E)

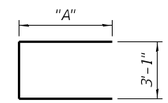

BARS u100(E) THRU u103(E)

Bar	"A"
u100(E)	5'-3"
u101(E)	3'-7"
u102(E)	6'-1"
u103(E)	3'-10"

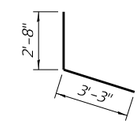

BAR v101(E)

PIER 33 BILL OF MATERIAL

Bar	No.	Size	Length	Shape
d100(E)	18	#5	5'-4"	
e100(E)	6	#5	16'-11"	
n100(E)	26	#10	15'-2"	
p100(E)	9	#9	16'-11"	
p101(E)	6	#6	16'-11"	
s100(E)	10	#5	9'-7"	
s101(E)	48	#5	11'-5"	
s102(E)	13	#5	3'-10"	
t100(E)	30	#8	9'-8"	
u100(E)	26	#4	13'-7"	
u101(E)	4	#4	10'-3"	
u102(E)	4	#4	15'-3"	
u103(E)	6	#6	11'-4"	
v100(E)	10	#5	7'-8"	
v101(E)	8	#5	5'-11"	
v102(E)	8	#5	11'-0"	
v103(E)	26	#10	14'-10"	
w100(E)	32	#6	14'-5"	
Structure Excavation			Cu. Yd.	44
Concrete Structures			Cu. Yd.	39.6
Form Liner Textured Surface			Sq. Ft.	44
Reinforcement Bars, Epoxy Coated			Pound	7,060
Furnishing Metal Shell Piles 12" X 0.250"			Foot	441
Driving Piles			Foot	441
Test Pile Metal Shells			Each	1
Concrete Sealer			Sq. Ft.	545

PIER 38 BILL OF MATERIAL

Bar	No.	Size	Length	Shape
d100(E)	18	#5	5'-4"	
e100(E)	6	#5	16'-11"	
n100(E)	26	#10	15'-2"	
p100(E)	9	#9	16'-11"	
p101(E)	6	#6	16'-11"	
s100(E)	10	#5	9'-7"	
s101(E)	48	#5	11'-5"	
s102(E)	13	#5	3'-10"	
t100(E)	30	#8	9'-8"	
u100(E)	26	#4	13'-7"	
u101(E)	4	#4	10'-3"	
u102(E)	4	#4	15'-3"	
u103(E)	6	#6	11'-4"	
v100(E)	10	#5	7'-8"	
v101(E)	8	#5	5'-11"	
v102(E)	8	#5	11'-0"	
v104(E)	26	#10	14'-4"	
w100(E)	32	#6	14'-5"	
Structure Excavation			Cu. Yd.	45
Concrete Structures			Cu. Yd.	39.1
Form Liner Textured Surface			Sq. Ft.	44
Reinforcement Bars, Epoxy Coated			Pound	7,010
Furnishing Metal Shell Piles 12" X 0.250"			Foot	343
Driving Piles			Foot	343
Test Pile Metal Shells			Each	1
Concrete Sealer			Sq. Ft.	534

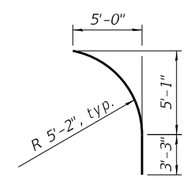

BAR v102(E)

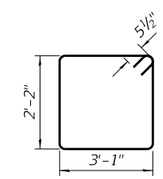

BAR s101(E)

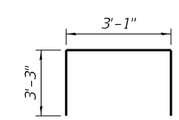

BAR s100(E)

MINIMUM BAR LAP

Bar	Lap
#4	2'-7"
#5	3'-3"
#10	10'-10"

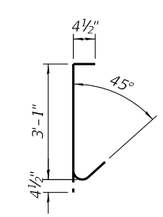

BAR s102(E)

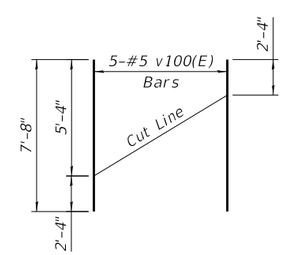

BAR v100(E)

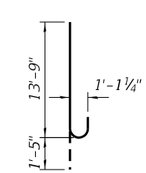

BAR n100(E)

Note:
See Sheet 60 for Elevation and End View of Pier

MODEL: Default
FILE NAME: pw:\\hq-pwint01.a-e.transyscorp.com:transyscorp-pw1\Documents\Projects_2021\CH401 - Chicago\P401210087 - Streamwood - Pedestrian Bridge over IL 59 - Phase II\304.00 - Bridge\304.01 - Standard Sheets\PR2DET2 &slash: PIERS 33 AND 38 DETAILS - 2
5/23/2023 3:11:57 PM

TRANSYSTEMS

USER NAME = lmnainggolan	DESIGNED - JE	REVISED -	
	CHECKED - WJC	REVISED -	
PLOT SCALE = 0.1667 ' / in.	DRAWN - JE	REVISED -	
PLOT DATE = 5/23/2023	CHECKED - WJC	REVISED -	

STATE OF ILLINOIS
DEPARTMENT OF TRANSPORTATION

PIERS 33 AND 38 DETAILS - 2
STRUCTURE NO. 016-8309

SHEET 12 OF 29 SHEETS

F.A.P. RTE.	SECTION	COUNTY	TOTAL SHEETS	SHEET NO.
338	21-00067-00-BR	COOK	90	61

CONTRACT NO. 61J67

ILLINOIS FED. AID PROJECT

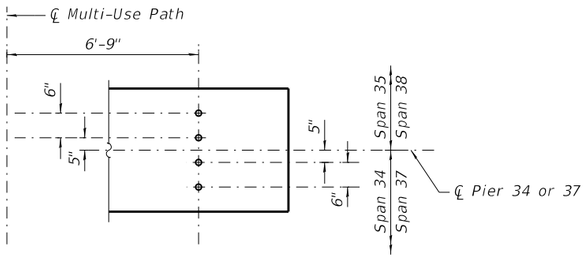

ANCHOR BOLT LAYOUT

(For information only. See Notes.)

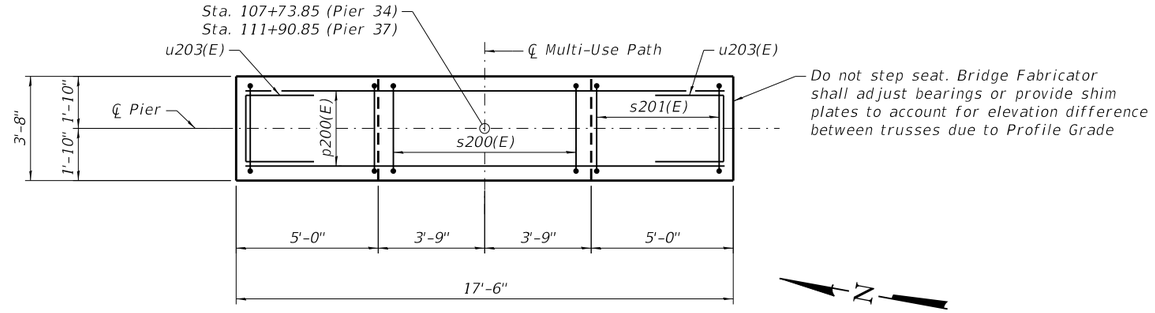

TOP PLAN

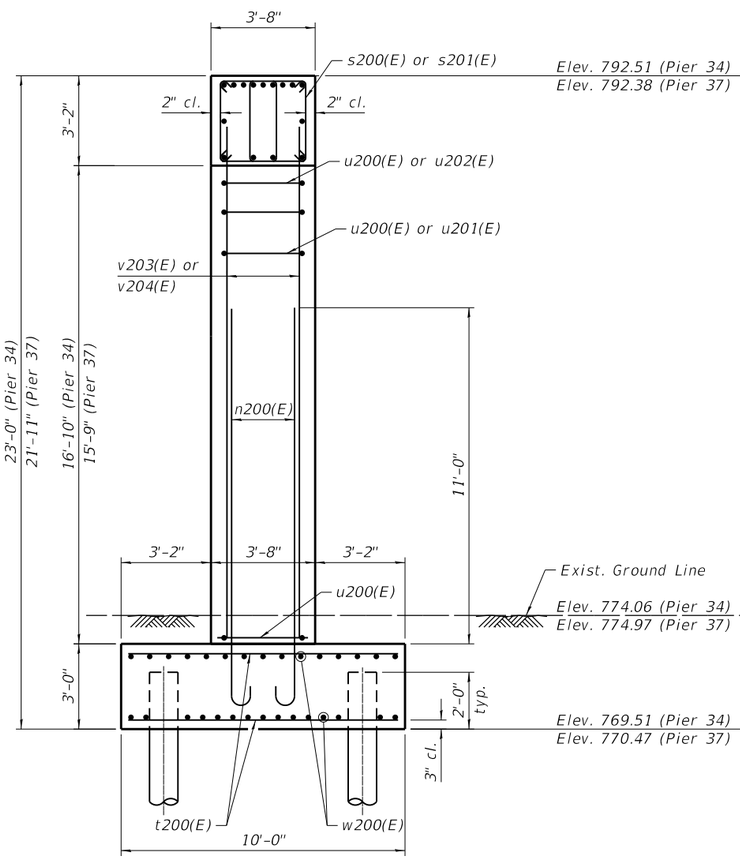

END VIEW

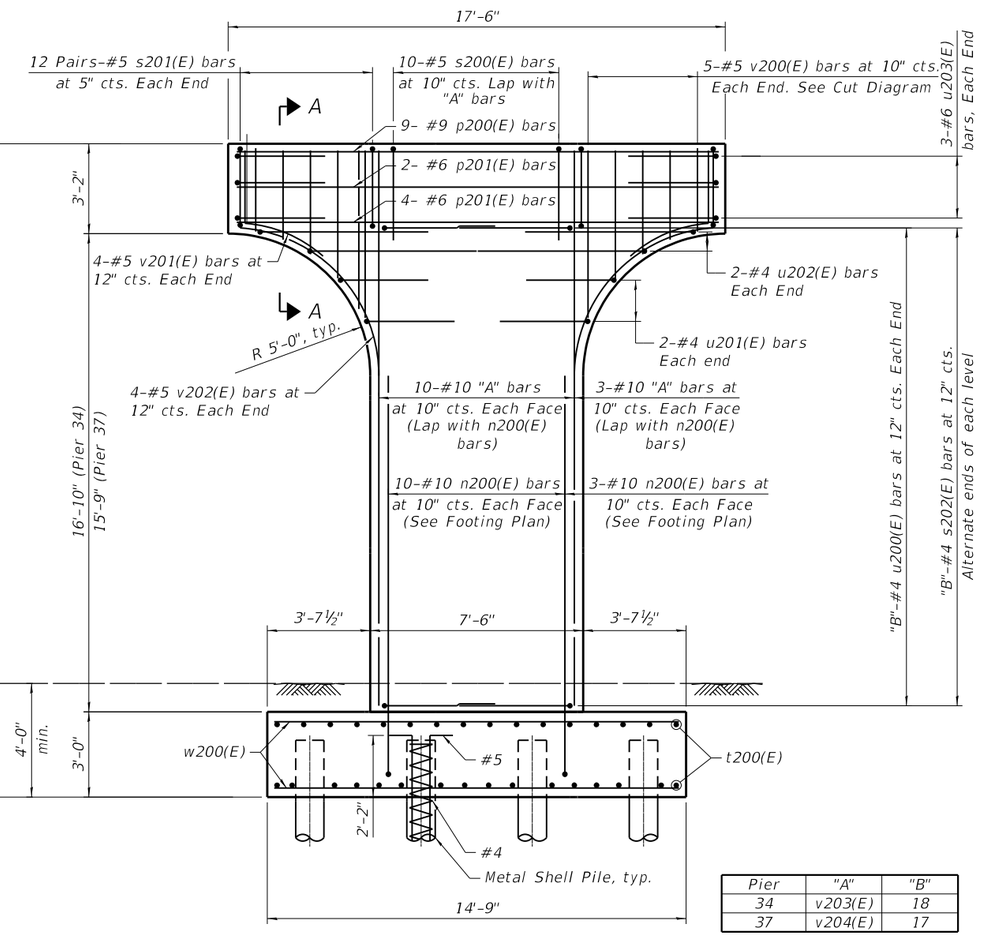

ELEVATION

(Looking Upstation)

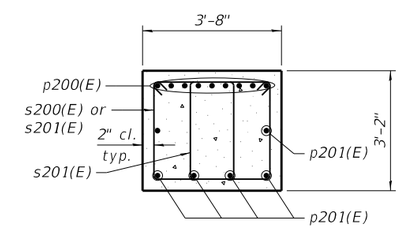

SECTION A-A

Pier	"A"	"B"
34	v203(E)	18
37	v204(E)	17

Notes:

For footing plan, bar bending diagrams, and Bill of Material, see sheet 63.

Concrete clear cover shall be 2" minimum unless noted otherwise

Truss fabricator shall determine size and location of anchor bolts. Cost included with Pedestrian Truss Superstructure.

All edges shall have standard ¾" chamfers except as noted.

Space reinforcement in cap to miss anchor bolts.

For details of piles, see sheet 66.

Concrete Sealer shall be applied to all exposed surfaces of the piers.

Truss fabricator shall provide a 1" nominal shim pack for each bearing consisting of a 1", ½", ¼" and 2-⅛" shim plates matching the dimnesions of the masonry plate provided, including holes for anchor bolts. Cost included in the cost of Pedestrian Truss Superstructure.

For Form Liner details, see Architectural Sheets.

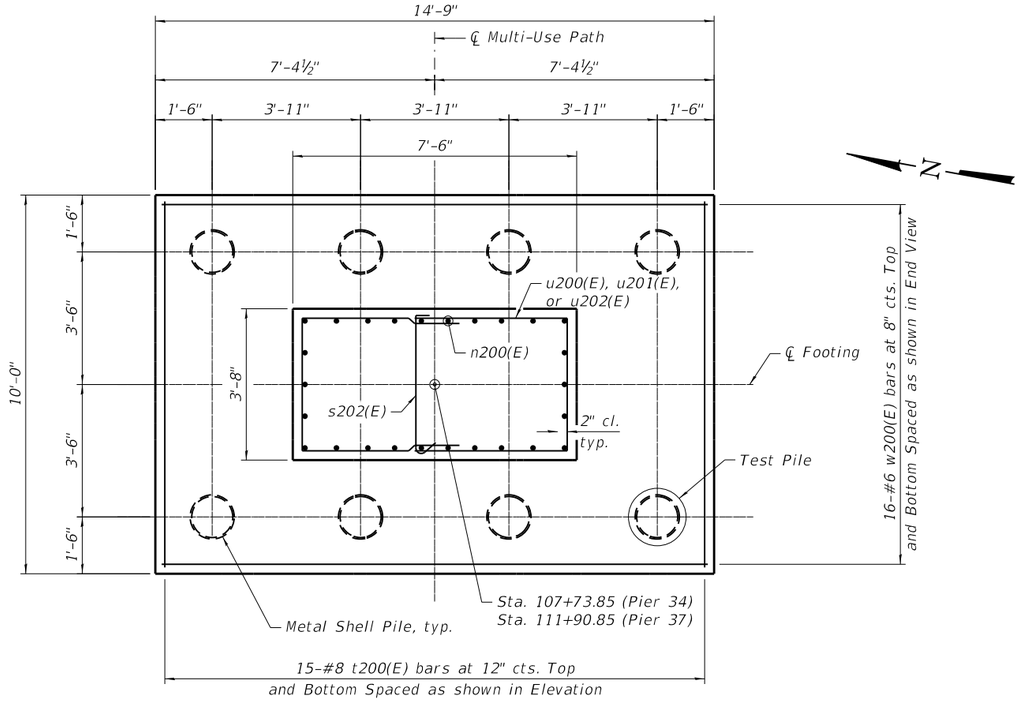

FOOTING PLAN

PILE DATA

Type: Metal Shell - 12 in. dia. x 0.250 in. walls
Nominal Required Bearing: 291 Kips
Factored Resistance Available: 160 Kips
Est. Length: 63 ft. (Pier 34)
49 ft. (Pier 37)
No. Production Piles: 7 per Pier
No. Test Piles: 1 per Pier

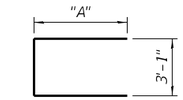

BARS u200(E) THRU u203(E)

Bar	"A"
u200(E)	5'-3"
u201(E)	3'-7"
u202(E)	6'-1"
u203(E)	3'-10"

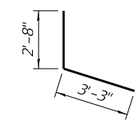

BAR v201(E)

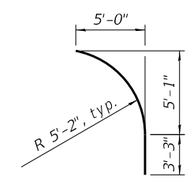

BAR v202(E)

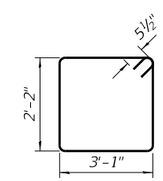

BAR s201(E)

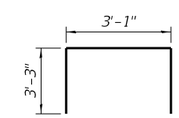

BAR s200(E)

PIER 34 BILL OF MATERIAL

Bar	No.	Size	Length	Shape
n200(E)	26	#10	15'-2"	
p200(E)	9	#9	16'-11"	
p201(E)	6	#6	16'-11"	
s200(E)	10	#5	9'-7"	
s201(E)	48	#5	11'-5"	
s202(E)	18	#5	3'-10"	
t200(E)	30	#8	9'-8"	
u200(E)	36	#4	13'-7"	
u201(E)	4	#4	10'-3"	
u202(E)	4	#4	15'-3"	
u203(E)	6	#6	11'-4"	
v200(E)	10	#5	7'-8"	
v201(E)	8	#5	5'-11"	
v202(E)	8	#5	11'-0"	
v203(E)	26	#10	19'-8"	
w200(E)	32	#6	14'-5"	
Structure Excavation			Cu. Yd.	45
Concrete Structures			Cu. Yd.	42.6
Form Liner Textured Surface			Sq. Ft.	44
Reinforcement Bars, Epoxy Coated			Pound	7,510
Furnishing Metal Shell Piles 12" X 0.250"			Foot	441
Driving Piles			Foot	441
Test Pile Metal Shells			Each	1
Concrete Sealer			Sq. Ft.	588

PIER 37 BILL OF MATERIAL

Bar	No.	Size	Length	Shape
n200(E)	26	#10	15'-2"	
p200(E)	9	#9	16'-11"	
p201(E)	6	#6	16'-11"	
s200(E)	10	#5	9'-7"	
s201(E)	48	#5	11'-5"	
s202(E)	17	#5	3'-10"	
t200(E)	30	#8	9'-8"	
u200(E)	34	#4	13'-7"	
u201(E)	4	#4	10'-3"	
u202(E)	4	#4	15'-3"	
u203(E)	6	#6	11'-4"	
v200(E)	10	#5	7'-8"	
v202(E)	8	#5	11'-0"	
v203(E)	8	#5	11'-0"	
v204(E)	26	#10	18'-7"	
w200(E)	32	#6	14'-5"	
Structure Excavation			Cu. Yd.	44
Concrete Structures			Cu. Yd.	41.5
Form Liner Textured Surface			Sq. Ft.	44
Reinforcement Bars, Epoxy Coated			Pound	7,410
Furnishing Metal Shell Piles 12" X 0.250"			Foot	343
Driving Piles			Foot	343
Test Pile Metal Shells			Each	1
Concrete Sealer			Sq. Ft.	564

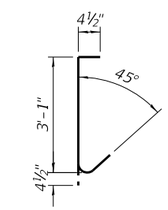

BAR s202(E)

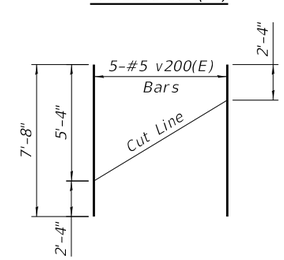

BAR v200(E)

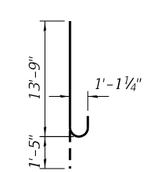

BAR n200(E)

MINIMUM BAR LAP

Bar	Lap
#4	2'-7"
#5	3'-3"
#10	10'-10"

Note:
See Sheet 62 for Elevation and End View of Pier

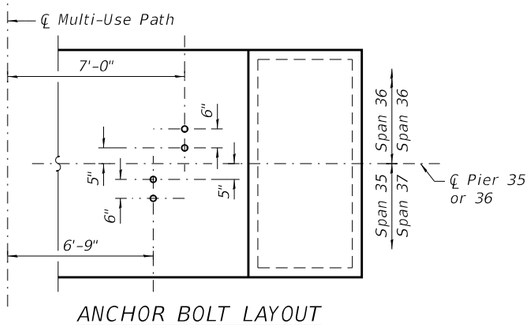

ANCHOR BOLT LAYOUT

(For information only, see Notes)

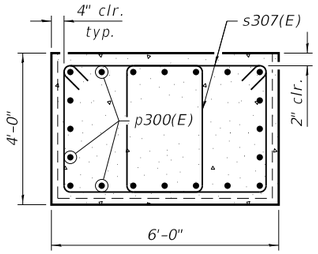

SECTION D-D

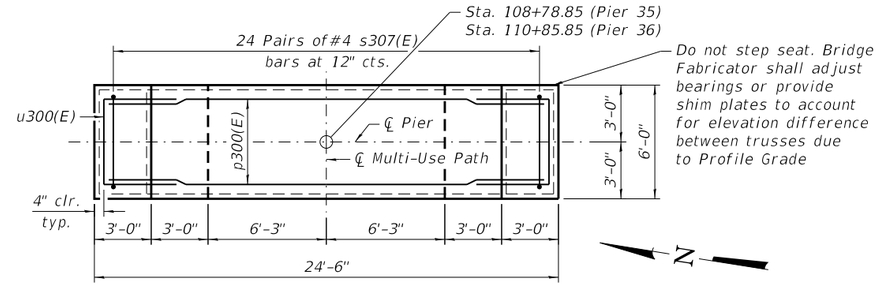

TOP PLAN

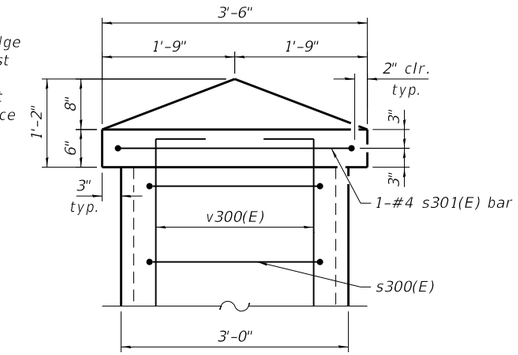

DETAIL A

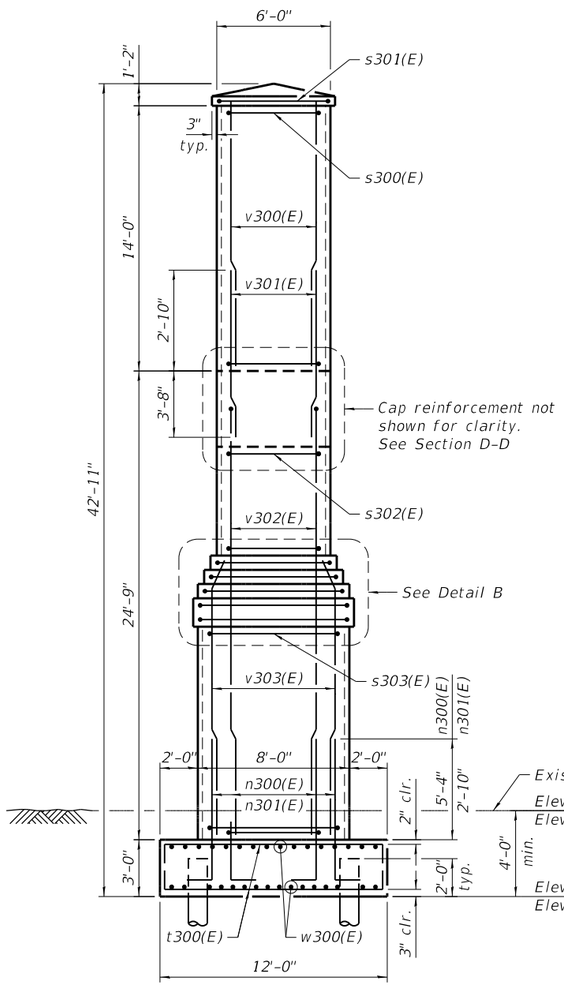

END VIEW

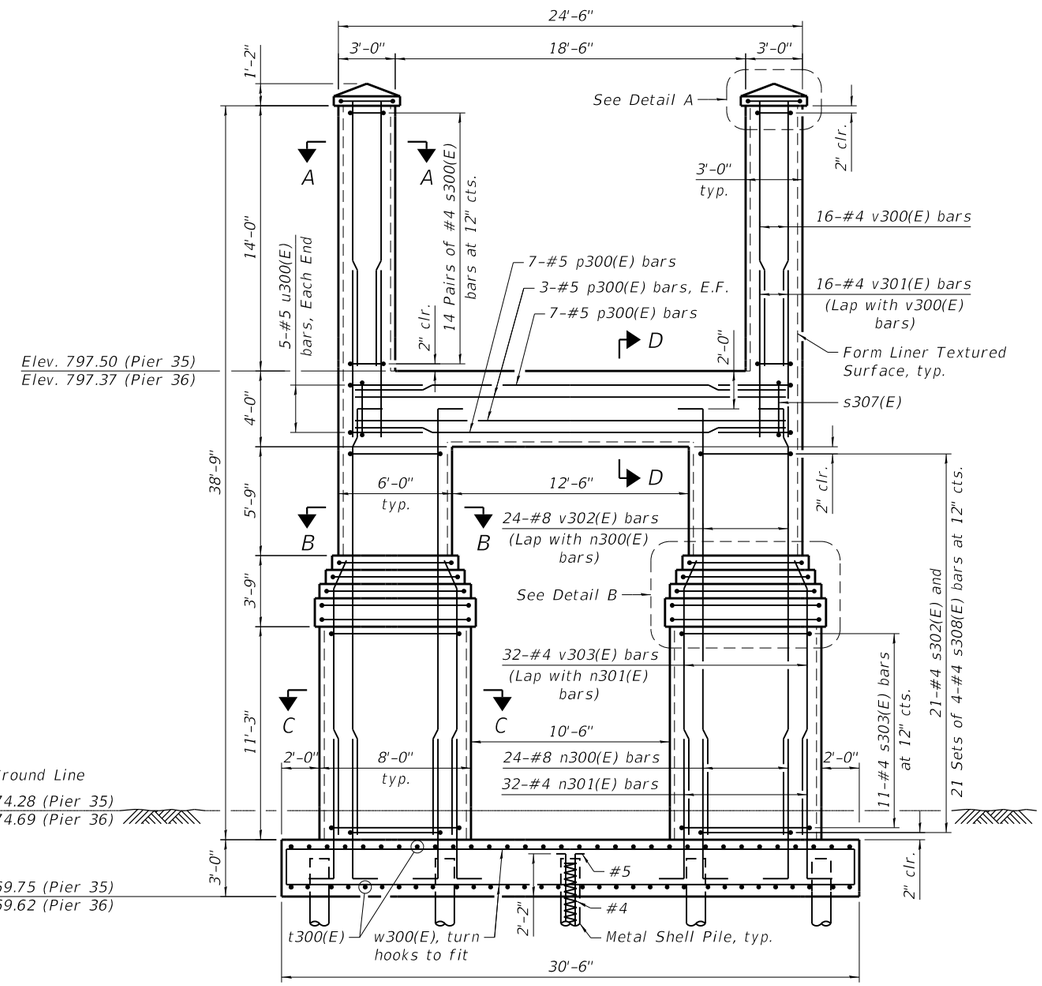

ELEVATION

(Looking Upstation)

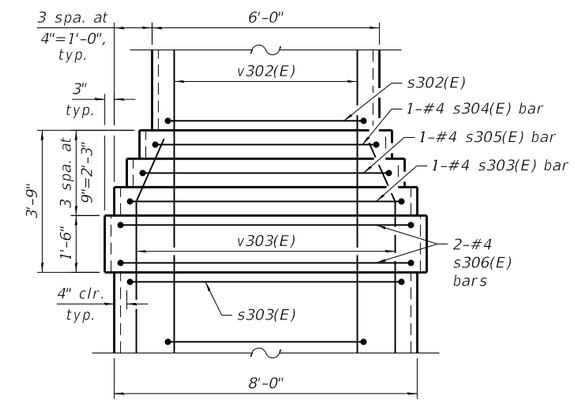

DETAIL B

Notes:

For Footing Plan, bar bending diagrams, Bill of Materials, and Sections A-A, B-B, and C-C, see Sheet 65.

Concrete clear cover shall be 2" minimum unless noted otherwise

Truss fabricator shall determine size and location of anchor bolts. Cost included with Pedestrian Truss Superstructure.

All edges shall have standard ¾" chamfers except as noted.

Space reinforcement in cap to miss anchor bolts.

For details of piles, see Sheet 66.

Truss fabricator shall provide a 1" nominal shim pack for each bearing consisting of a 1", ½", ¼" and 2-⅛" shim plates matching the dimensions of the masonry plate provided, including holes for anchor bolts. Cost included in the cost of Pedestrian Truss Superstructure.

For Form Liner details, see Architectural Sheets.

MODEL: Default
FILE NAME: pw:\\hq-pwint01.a-e.transyscorp.com:transyscorp-pw1\Documents\Projects_2021\CH401 - Chicago\P401210087 - Streamwood - Pedestrian Bridge over IL 59 - Phase II\304.00 - Bridge\304.01 - Standard Sheets\PR4DET1 &slash: PIERS 35 AND 36 DETAILS - 1

5/23/2023 3:12:04 PM

TRANSYSTEMS

USER NAME = lmnainggolan	DESIGNED - WJC	REVISED -	
	CHECKED - CMG	REVISED -	
PLOT SCALE = 0.1667 ' / in.	DRAWN - CMG	REVISED -	
PLOT DATE = 5/23/2023	CHECKED - WJC	REVISED -	

STATE OF ILLINOIS
DEPARTMENT OF TRANSPORTATION

PIERS 35 AND 36 DETAILS - 1
STRUCTURE NO. 016-8309

SHEET 15 OF 29 SHEETS

F.A.P. RTE.	SECTION	COUNTY	TOTAL SHEETS	SHEET NO.
338	21-00067-00-BR	COOK	90	64
		CONTRACT NO. 61J67		
		ILLINOIS	FED. AID PROJECT	

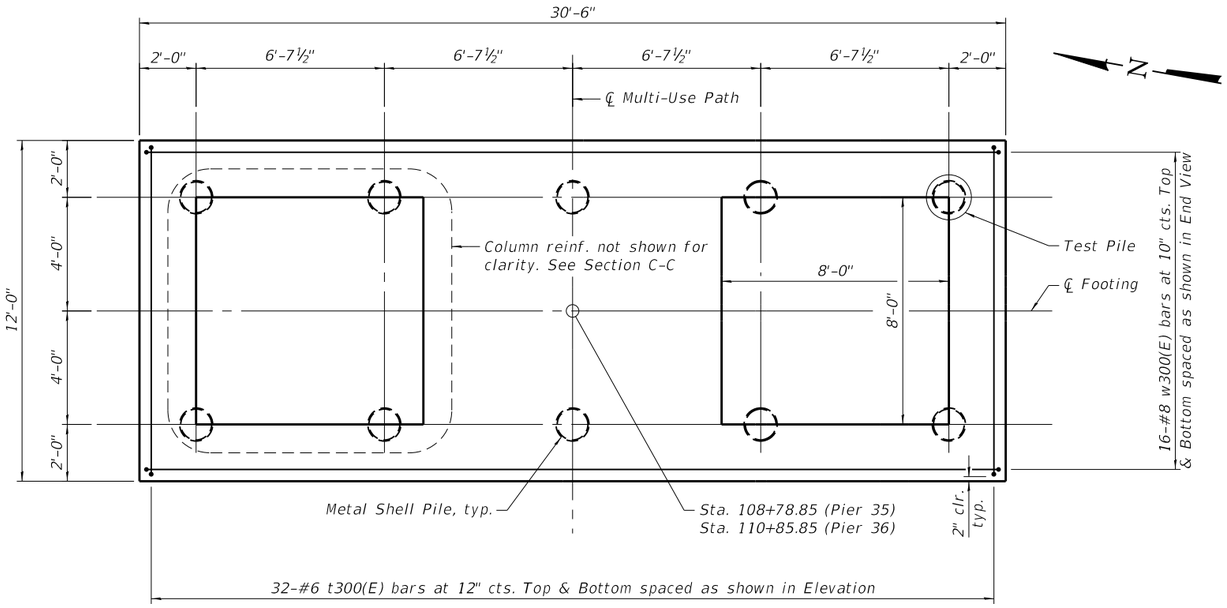

FOOTING PLAN

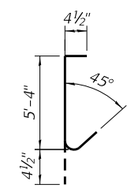

BAR s308(E)

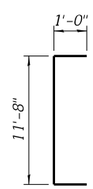

BAR t300(E)

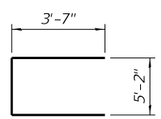

BAR u300(E)

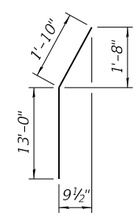

BAR v303(E)

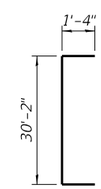

BAR w300(E)

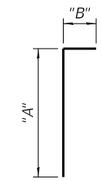

BARS n300(E), n301(E), v300(E), & v302(E)

Bar	"A"	"B"
n300(E)	8'-1"	1'-4"
n301(E)	5'-7"	0'-8"
v300(E)	14'-6"	0'-8"
v302(E)	22'-7"	1'-4"

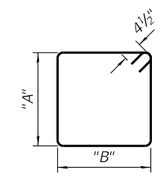

BAR s300(E) THRU s307(E)

Bar	"A"	"B"
s300(E)	3'-7"	2'-4"
s301(E)	6'-2"	3'-2"
s302(E)	5'-4"	5'-4"
s303(E)	7'-4"	7'-4"
s304(E)	6'-0"	6'-0"
s305(E)	6'-8"	6'-8"
s306(E)	7'-10"	7'-10"
s307(E)	3'-6"	3'-6"

MINIMUM BAR LAP

Bar	Lap
#5	3'-2"
#8	5'-1"

PIER 35 BILL OF MATERIAL

Bar	No.	Size	Length	Shape
n300(E)	48	#8	9'-5"	
n301(E)	64	#4	6'-3"	
p300(E)	20	#5	23'-10"	
s300(E)	56	#4	12'-7"	
s301(E)	2	#4	19'-5"	
s302(E)	42	#4	22'-1"	
s303(E)	24	#4	30'-1"	
s304(E)	2	#4	24'-9"	
s305(E)	2	#4	27'-5"	
s306(E)	4	#4	32'-1"	
s307(E)	48	#4	14'-9"	
s308(E)	168	#4	6'-1"	
t300(E)	64	#6	13'-8"	
u300(E)	10	#5	12'-4"	
v300(E)	32	#4	15'-2"	
v301(E)	32	#4	6'-6"	
v302(E)	48	#8	23'-11"	
v303(E)	64	#4	14'-10"	
w300(E)	32	#8	32'-10"	
Structure Excavation			Cu. Yd.	93
Concrete Structures			Cu. Yd.	168.1
Form Liner Textured Surface			Sq. Ft.	2,142
Reinforcement Bars, Epoxy Coated			Pound	13,300
Furnishing Metal Shell Piles 12" X 0.250"			Foot	594
Driving Piles			Foot	594
Test Pile Metal Shells			Each	1
Staining Concrete Structures			Sq. Ft.	2,331

PIER 36 BILL OF MATERIAL

Bar	No.	Size	Length	Shape
n300(E)	48	#8	9'-5"	
n301(E)	64	#4	6'-3"	
p300(E)	20	#5	23'-10"	
s300(E)	56	#4	12'-7"	
s301(E)	2	#4	19'-5"	
s302(E)	42	#4	22'-1"	
s303(E)	24	#4	30'-1"	
s304(E)	2	#4	24'-9"	
s305(E)	2	#4	27'-5"	
s306(E)	4	#4	32'-1"	
s307(E)	48	#4	14'-9"	
s308(E)	168	#4	6'-1"	
t300(E)	64	#6	13'-8"	
u300(E)	10	#5	12'-4"	
v300(E)	32	#4	15'-2"	
v301(E)	32	#4	6'-6"	
v302(E)	48	#8	23'-11"	
v303(E)	64	#4	14'-10"	
w300(E)	32	#8	32'-10"	
Structure Excavation			Cu. Yd.	104
Concrete Structures			Cu. Yd.	168.1
Form Liner Textured Surface			Sq. Ft.	2,142
Reinforcement Bars, Epoxy Coated			Pound	13,300
Furnishing Metal Shell Piles 12" X 0.250"			Foot	594
Driving Piles			Foot	594
Test Pile Metal Shells			Each	1
Staining Concrete Structures			Sq. Ft.	2,331

PILE DATA

Type: Metal Shell - 12 in. dia. x 0.250 in. walls
Nominal Required Bearing: 412 Kips
Factored Resistance Available: 199 Kips
Est. Length: 66 ft. (Pier 35)
66 ft. (Pier 36)
No. Production Piles: 9 per Pier
No. Test Piles: 1 per Pier

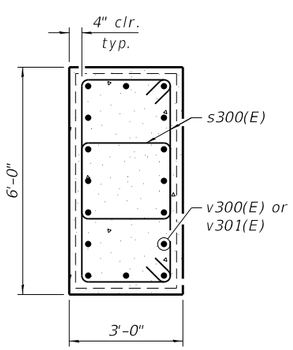

SECTION A-A

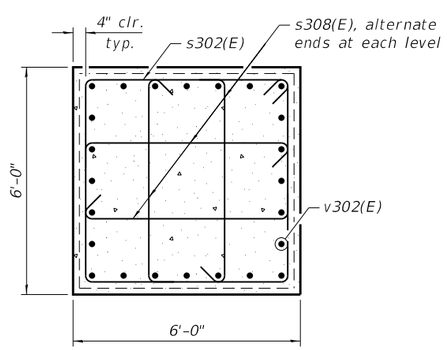

SECTION B-B

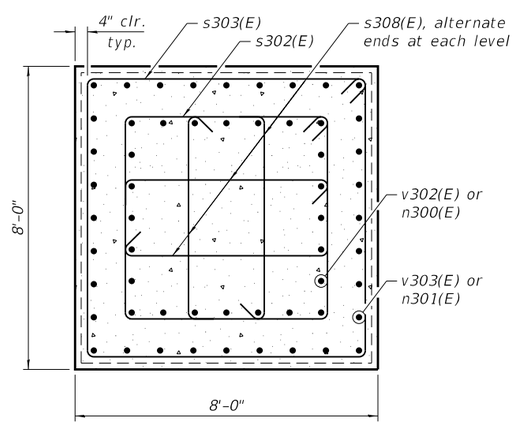

SECTION C-C

Note:
See Sheet 64 for Elevation and End View of Pier

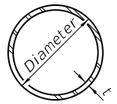

METAL SHELL PILE TABLE

Designation and outside diameter	Wall thickness t	Weight per foot (Lbs./ft.)	Inside volume (yd.³/ft.)
PP12	0.250"	31.40	0.0267
PP14	0.250"	36.75	0.0368
PP14	0.312"	45.65	0.0361
PP16	0.312"	52.32	0.0478
PP16	0.375"	62.64	0.0470

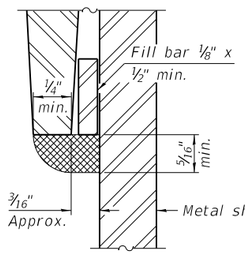

DETAIL A

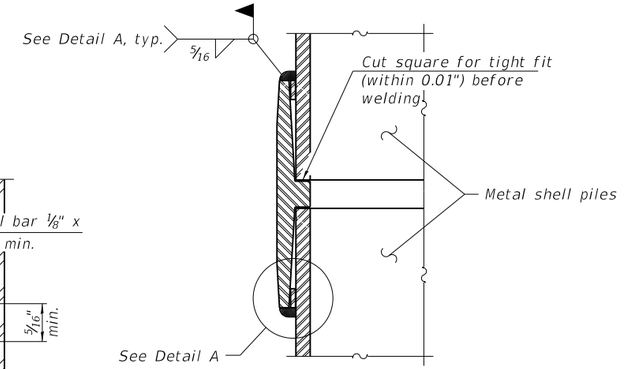

WELDED COMMERCIAL SPLICE

Notes:
The 1/8" x 1/2" min. fill bar may be constructed of 2 bars with a 1/8" max. gap between them.
Pile segments shall be driven to solid contact with splicer before welding.

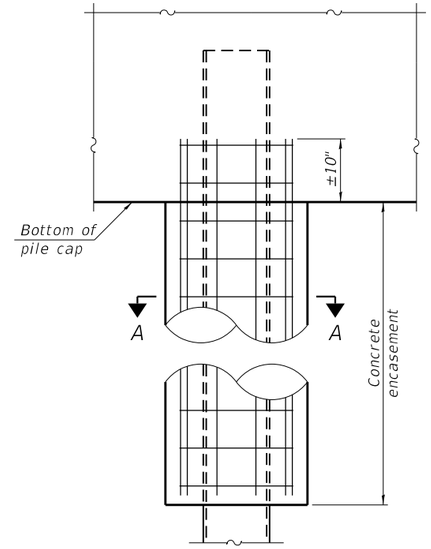

ELEVATION

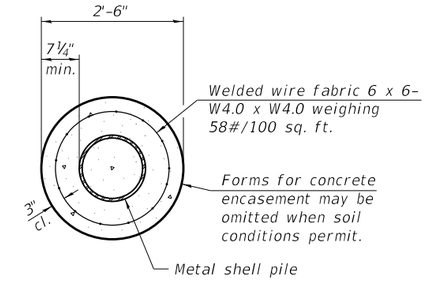

SECTION A-A

INDIVIDUAL PILE CONCRETE ENCASEMENT

(When specified)

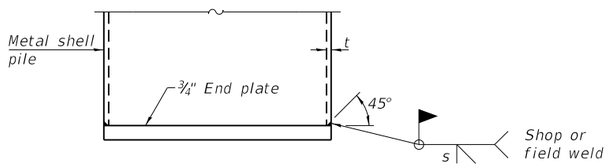

s = t - 1/8"

END PLATE ATTACHMENT

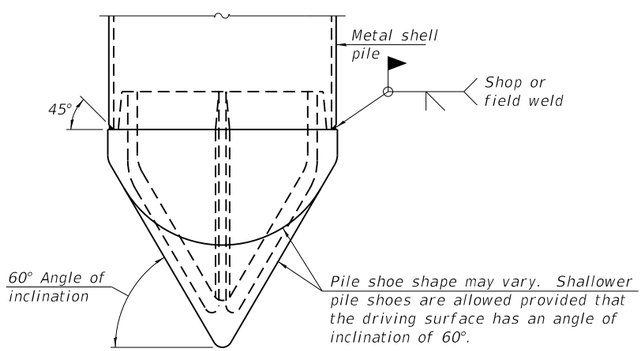

PILE SHOE ATTACHMENT

(When called for on the plans, the Contractor shall furnish metal shell pile shoes consisting of a single piece conical pile point as shown. The pile shoes shall be cast in one piece steel according to either ASTM A 148 Grade 80-50 or AASHTO M 103 Grade 65-35 and shall provide full bearing over the full circumference of the metal shell pile. The pile shoe shall have tapered leads to assure proper alignment and fitting and shall be secured to the pile with a circumferential weld).

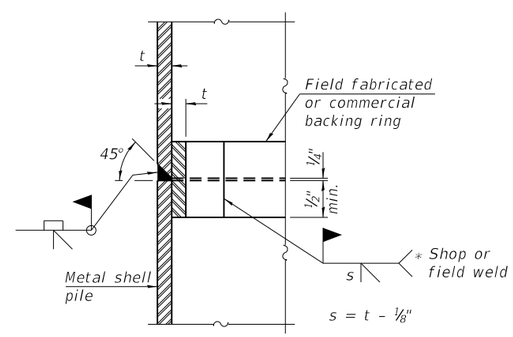

s = t - 1/8"

COMPLETE PENETRATION WELD SPLICE

* Field fabricated backing ring may be made from pile shell by removing segment to allow reducing circumference and vertically rejoin with partial joint penetration weld.

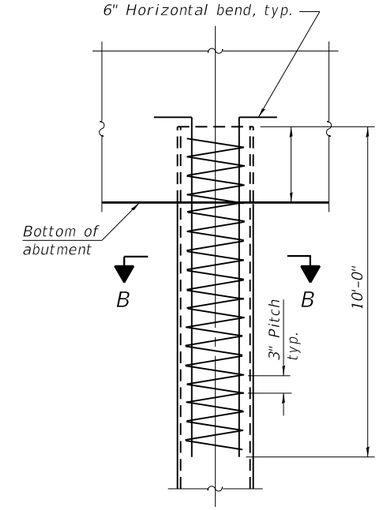

ELEVATION

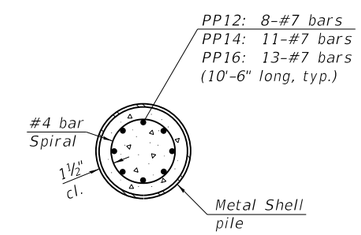

SECTION B-B

REINFORCEMENT AT ABUTMENTS

(Omit when concrete encasement is specified)

Note:
The metal shell piles shall be according to Article 1006.05 of the Standard Specifications.

Wang Engineering
wangeng@wangeng.com
1145 N Main Street
Lombard, IL 60148
Telephone: 630 953-9928
Fax: 630 953-9938

BORING LOG B-1

WEI Job No.: 7901-12-02

Client: TranSystems Corporation
Project: Pedestrian Bridge and Trail over IL 59
Location: Streamwood, IL

Datum: NAVD 88
Elevation: 774.64 ft
North: 1951349.79 ft
East: 1019593.51 ft
Station: 109+03.76
Offset: 17.00 RT

Elevation (ft)	SOIL AND ROCK DESCRIPTION	Depth (ft)	Sample Type	Recovery	Sample No.	SPT Values (blw/6 in)	Qu (tsf)	Moisture Content (%)
	Very stiff, brown SILTY CLAY LOAM; damp --TOPSOIL--				1	3 2 2	3.25 P	39
771.6	Very soft, gray SILTY CLAY LOAM, trace organic matter; wet --RDR 2--	5			2	1 1 1	<0.25 P	42
769.1	Soft to medium stiff, brown PEAT; moist to wet --RDR 2--				3	0 0 0	0.33 B	360
	--Organic content= 54.1%--	10			4	0 0 0	0.50 P	530
					5	0 0 0	0.33 B	297
761.6	Very loose, gray, organic SILTY LOAM; wet --RDR 2--	15			6	0 0 0	0.33 B	88
757.9	Medium stiff, gray SILTY LOAM to SILTY CLAY LOAM, trace organic matter; wet --L_L(%)=40, P_I(%)=25-- --%Gravel=0.1-- --%Sand=3.5-- --%Silt=77.0--				7	0 0 0	NR	71
		20			8	0 0 0	0.50 P	35

Elevation (ft)	SOIL AND ROCK DESCRIPTION	Depth (ft)	Sample Type	Recovery	Sample No.	SPT Values (blw/6 in)	Qu (tsf)	Moisture Content (%)
	--%Clay=19.4-- --RDR 2--							
754.1	Gray SANDY GRAVEL, some clay; saturated				9	2 3 4	1.72 B	20
753.3	Stiff to hard, gray SILTY CLAY to SILTY CLAY LOAM, trace gravel; damp to moist --RDR 2--				10	3 4 7	1.25 B	18
		25			11	3 5 6	1.80 B	18
	--water exited through auger flights from the surface of boring while drilling--				12	5 7 9	4.35 B	18
		35			13	3 5 8	2.54 B	22
		40			14	6 7 9	2.95 B	20

GENERAL NOTES

Begin Drilling: 09-04-2020 Complete Drilling: 09-04-2020
Drilling Contractor: Wang Testing Services Drill Rig: 17D50A [87%]
Driller: K&J Logger: E. Yim Checked by: C. Marin
Drilling Method: 2.25" IDA HSA, autohammer, backfilled upon completion

WATER LEVEL DATA

While Drilling: 21.00 ft
At Completion of Drilling: 25.00 ft
Time After Drilling: NA
Depth to Water: NA

The stratification lines represent the approximate boundary between soil types; the actual transition may be gradual.

Wang Engineering
wangeng@wangeng.com
1145 N Main Street
Lombard, IL 60148
Telephone: 630 953-9928
Fax: 630 953-9938

BORING LOG B-1

WEI Job No.: 7901-12-02

Client: TranSystems Corporation
Project: Pedestrian Bridge and Trail over IL 59
Location: Streamwood, IL

Datum: NAVD 88
Elevation: 774.64 ft
North: 1951349.79 ft
East: 1019593.51 ft
Station: 109+03.76
Offset: 17.00 RT

Elevation (ft)	SOIL AND ROCK DESCRIPTION	Depth (ft)	Sample Type	Recovery	Sample No.	SPT Values (blw/6 in)	Qu (tsf)	Moisture Content (%)
		45			15	6 7 8	1.64 B	16
727.9	--slow hard drilling-- --rig chatter; possible cobbles-- Medium dense, gray, fine to medium SAND, some gravel; saturated --RDR 4--	50			16	5 9 6	NP	12
722.9	Gray GRAVELLY SAND; saturated --RDR 3--							
720.6	Very stiff, gray SILTY CLAY, trace gravel; damp to moist --RDR 2--	55			17	4 7 8	2.05 B	14
		60			18	8 10 14	2.21 B	15

Elevation (ft)	SOIL AND ROCK DESCRIPTION	Depth (ft)	Sample Type	Recovery	Sample No.	SPT Values (blw/6 in)	Qu (tsf)	Moisture Content (%)
	--hard drilling--							
712.9	Medium dense, gray, medium SAND to SANDY LOAM; saturated --RDR 2-3--							
		65			19	3 4 8	NP	16
		70			20	11 11 13	NP	16
		75			21	7 9 15	NP	17
699.6	Boring terminated at 75.00 ft							
		80						

GENERAL NOTES

Begin Drilling: 09-04-2020 Complete Drilling: 09-04-2020
Drilling Contractor: Wang Testing Services Drill Rig: 17D50A [87%]
Driller: K&J Logger: E. Yim Checked by: C. Marin
Drilling Method: 2.25" IDA HSA, autohammer, backfilled upon completion

WATER LEVEL DATA

While Drilling: 21.00 ft
At Completion of Drilling: 25.00 ft
Time After Drilling: NA
Depth to Water: NA

The stratification lines represent the approximate boundary between soil types; the actual transition may be gradual.

Wang Engineering
wangeng@wangeng.com
1145 N Main Street
Lombard, IL 60148
Telephone: 630 953-9928
Fax: 630 953-9938

BORING LOG B-2

WEI Job No.: 7901-12-02

Client: TranSystems Corporation
Project: Pedestrian Bridge and Trail over IL 59
Location: Streamwood, IL

Datum: NAVD 88
Elevation: 774.39 ft
North: 1951389.28 ft
East: 1019759.30 ft
Station: 110+73.93
Offset: 26.31 LT

Elevation (ft)	SOIL AND ROCK DESCRIPTION	Depth (ft)	Sample Type	Recovery	Sample No.	SPT Values (blw/6 in)	Qu (tsf)	Moisture Content (%)
	17-inch thick, black SILTY CLAY LOAM --TOPSOIL--				1	7 4 3	1.50 P	25
773.0	Soft to stiff, brown to gray SILTY CLAY; moist to wet --RDR 2--							
770.4	Loose, brown SILT; moist	5			2	2 2 4	0.33 B	31
768.9	--rig chatter; possible cobbles-- Stiff to hard, gray SILTY CLAY, trace gravel; damp to moist --RDR 2-3--				3	2 3 5	1.23 B	17
		10			4	3 5 6	2.46 B	17
					5	4 6 10	6.48 B	14
	--rig chatter; possible cobbles--	15			6	3 5 6	2.95 B	16
	--L_L(%)=34, P_I(%)=17-- --%Gravel=1.9-- --%Sand=3.6-- --%Silt=64.7-- --%Clay=39.8--				7	4 4 7	2.46 B	20
	--2-inch thick, silty clay loam lens--	20			8	5 5 7	2.38 B	19

Elevation (ft)	SOIL AND ROCK DESCRIPTION	Depth (ft)	Sample Type	Recovery	Sample No.	SPT Values (blw/6 in)	Qu (tsf)	Moisture Content (%)
	wet--							
					9	4 5 6	2.21 B	18
		25			10	4 5 8	1.89 B	18
					11	6 9 9	NP	12
747.7	Medium dense, gray SANDY GRAVEL; saturated --RDR 2--							
		30			12	6 7 10	NP	6
	--heaving sand in augers--							
740.4	Stiff to very stiff, gray SILTY CLAY LOAM, trace gravel; moist to wet --RDR 2--	35			13	9 6 4	2.00 P	13
735.1	Gray, medium to coarse SAND;	40			14	6 16 17	1.80 B	16

GENERAL NOTES

Begin Drilling: 09-02-2020 Complete Drilling: 09-02-2020
Drilling Contractor: Wang Testing Services Drill Rig: 17D50A [87%]
Driller: K&J Logger: E. Yim Checked by: C. Marin
Drilling Method: 2.25" IDA HSA, autohammer, backfilled upon completion

WATER LEVEL DATA

While Drilling: 26.00 ft
At Completion of Drilling: 7.00 ft
Time After Drilling: NA
Depth to Water: NA

The stratification lines represent the approximate boundary between soil types; the actual transition may be gradual.

BORING LOG B-2

Wang Engineering
wangeng@wangeng.com
1145 N Main Street
Lombard, IL 60148
Telephone: 630 953-9928
Fax: 630 953-9938

WEI Job No.: 7901-12-02
Client: TranSystems Corporation
Project: Pedestrian Bridge and Trail over IL 59
Location: Streamwood, IL

Datum: NAVD 88
Elevation: 774.39 ft
North: 1951389.28 ft
East: 1019759.30 ft
Station: 110+73.93
Offset: 26.31 LT

Elevation (ft)	SOIL AND ROCK DESCRIPTION	Depth (ft)	Sample Type	Recovery	Sample No.	SPT Values (blw/6 in)	Qu (tsf)	Moisture Content (%)
	saturated --RDR 2--							
738.4	Stiff, gray SILTY CLAY; moist --RDR 2-- --laminated sand and silt seams; wet--	45			15	7 5 7	1.50 P	28
	--laminated sand and silt seams; wet--	50			16	5 6 10	1.25 P	23
722.6	Medium dense, gray SILTY LOAM; saturated --RDR 2-- --laminated silty clay and sand seams--	55			17	6 9 13	0.75 P	19
717.6	Stiff, gray SILTY CLAY; moist to wet --RDR 2-- --laminated silty loam seams; saturated--	60			18	6 7 9	1.23 B	22
	--water exited through auger flights from the surface of boring while drilling--							
	--laminated sand and silt seams; saturated--	65			19	3 2 3	1.31 B	23
705.6	Gray SILTY LOAM, trace gravel; saturated	70			20	7 8 9	1.23 B	21
704.4	Medium dense, gray SANDY GRAVEL; saturated --RDR 2--							
	--heaving sand in augers; flushed augers with water--							
699.4	Boring terminated at 75.00 ft	75			21	11 11 10	NP	5
		80						

GENERAL NOTES

Begin Drilling: 09-02-2020 Complete Drilling: 09-02-2020
Drilling Contractor: Wang Testing Services Drill Rig: 17D50A [87%]
Driller: K&J Logger: E. Yim Checked by: C. Marin
Drilling Method: 2.25" ID A HSA, autohammer, backfilled upon completion

WATER LEVEL DATA

While Drilling: 26.00 ft
At Completion of Drilling: 7.00 ft
Time After Drilling: NA
Depth to Water: NA
The stratification lines represent the approximate boundary between soil types; the actual transition may be gradual.

BORING LOG BWB-01

Wang Engineering
wangeng@wangeng.com
1145 N Main Street
Lombard, IL 60148
Telephone: 630 953-9928
Fax: 630 953-9938

WEI Job No.: 7901-12-02
Client: TranSystems Corporation
Project: Pedestrian Bridge and Trail over IL 59
Location: Streamwood, IL

Datum: NAVD 88
Elevation: 774.40 ft
North: 1950788.53 ft
East: 1019305.04 ft
Station: 100+33.67
Offset: 38.78 RT

Elevation (ft)	SOIL AND ROCK DESCRIPTION	Depth (ft)	Sample Type	Recovery	Sample No.	SPT Values (blw/6 in)	Qu (tsf)	Moisture Content (%)
773.4	7-inch thick, black SILTY CLAY LOAM --TOPSOIL-- Stiff, brown PEAT; moist --RDR 2--				1	0 0 0	1.00 P	235
771.4	Medium dense, gray, SANDY LOAM, little gravel; moist --RDR 2--	5			2	4 6 7	NP	16
					3	6 5 9	NP	15
766.4	Very stiff, gray SILTY CLAY, trace gravel; moist --RDR 2--	10			4	5 6 8	2.00 P	17
763.9	Loose to medium dense, gray SANDY LOAM; saturated --RDR 2--	15			5	3 4 4	NP	20
					6	5 6 13	NP	21
758.9	Medium stiff to very stiff, gray SILTY CLAY, trace gravel; moist to wet --RDR 2--	20			7	3 5 6	0.66 B	22
					8	4 6 7	1.50 P	21
					9	5 6 10	2.30 B	21
751.4	Medium dense, gray SILT; wet --RDR 2-- --L_L(%)=18, P_I(%)=15-- --%Gravel=0.0-- --%Sand=1.2-- --%Silt=80.3-- --%Clay=18.5-- --A-4 (0)--	25			10	5 4 6	0.33 B	20
748.9	Stiff to very stiff, gray SILTY CLAY, trace gravel; moist --RDR 2--				11	4 4 6	2.05 B	24
744.4	Boring terminated at 30.00 ft	30			12	5 6 7	1.80 B	21
		35						
		40						

GENERAL NOTES

Begin Drilling: 05-07-2021 Complete Drilling: 05-07-2021
Drilling Contractor: Wang Testing Services Drill Rig: 17D50A [87%]
Driller: K&A Logger: M. Rojo Checked by: J. Bensen
Drilling Method: 2.25" ID HSA; boring completed upon completion

WATER LEVEL DATA

While Drilling: 6.00 ft
At Completion of Drilling: 18.00 ft
Time After Drilling: NA
Depth to Water: NA
The stratification lines represent the approximate boundary between soil types; the actual transition may be gradual.

BORING LOG BWB-02

Wang Engineering
wangeng@wangeng.com
1145 N Main Street
Lombard, IL 60148
Telephone: 630 953-9928
Fax: 630 953-9938

WEI Job No.: 7901-12-02
Client: TranSystems Corporation
Project: Pedestrian Bridge and Trail over IL 59
Location: Streamwood, IL

Datum: NAVD 88
Elevation: 774.00 ft
North: 1950884.44 ft
East: 1019167.42 ft
Station: 101+29.58
Offset: 98.84 LT

Elevation (ft)	SOIL AND ROCK DESCRIPTION	Depth (ft)	Sample Type	Recovery	Sample No.	SPT Values (blw/6 in)	Qu (tsf)	Moisture Content (%)
773.6	6-inch thick, black CLAY LOAM --TOPSOIL-- Very soft, brown PEAT; saturated --RDR 1--				1	0 0 0	< 0.05 B	159
		5			2	0 0 0	< 0.05 B	497
					3	0 0 0	< 0.05 B	486
		10			4	0 0 0	< 0.05 B	214
763.6	Medium dense, brown GRAVEL; wet --RDR 2--				5	9 9 9	NP	
761.0	Medium dense, gray SANDY LOAM to coarse SAND, trace gravel; saturated --RDR 2--	15			6	8 10 7	NP	13
					7	20 12 9	NP	19
756.0	Dense, gray SILTY LOAM; moist --RDR 2--	20			8	41 35 13	0.50 P	16
753.5	Medium stiff to stiff, gray SILTY CLAY, trace gravel; damp to moist --RDR 2--				9	3 6 10	1.56 B	22
		25			10	3 3 4	0.82 B	23
					11	3 5 7	1.23 B	22
744.0	Boring terminated at 30.00 ft	30			12	2 6 6	1.80 B	22
		35						
		40						

GENERAL NOTES

Begin Drilling: 05-05-2021 Complete Drilling: 05-05-2021
Drilling Contractor: Wang Testing Services Drill Rig: 17D50A [87%]
Driller: K&A Logger: M. Rojo Checked by: J. Bensen
Drilling Method: 2.25" ID HSA; boring completed upon completion

WATER LEVEL DATA

While Drilling: 2.00 ft
At Completion of Drilling: 2.00 ft
Time After Drilling: NA
Depth to Water: NA
The stratification lines represent the approximate boundary between soil types; the actual transition may be gradual.

BORING LOG BWB-02-B

Wang Engineering
wangeng@wangeng.com
1145 N Main Street
Lombard, IL 60148
Telephone: 630 953-9928
Fax: 630 953-9938

WEI Job No.: 7901-12-02
Client: TranSystems Corporation
Project: Pedestrian Bridge and Trail over IL 59
Location: Streamwood, IL

Datum: NAVD 88
Elevation: 774.30 ft
North: 1950907.43 ft
East: 1019303.23 ft
Station: 101+51.77
Offset: 37.00 RT

Elevation (ft)	SOIL AND ROCK DESCRIPTION	Depth (ft)	Sample Type	Recovery	Sample No.	SPT Values (blw/6 in)	Qu (tsf)	Moisture Content (%)
773.3	12-inch thick, black SILTY CLAY --TOPSOIL--							
	Very soft, black to brown PEAT; wet --RDR 2-1--				1	0 0 0	< 0.25 P	181
		5			2	0 0 0	< 0.25 P	455
767.8	Gray SILTY CLAY; moist --RDR 1--				3	2 1 3	< 0.25 P	252
	Loose to medium dense, coarse SAND; saturated --RDR 1-2--	10			4	5 5 6	NP	14
763.8	Loose to medium dense, gray SANDY GRAVEL; saturated --RDR 2--				5	6 6 6	NP	5
		15			6	8 6 5	NP	10
					7	5 4 2	NP	6
756.3	Stiff to very stiff, gray SILTY CLAY, trace gravel; damp --RDR 2--	20			8	2 3 3	1.64 B	23

Elevation (ft)	SOIL AND ROCK DESCRIPTION	Depth (ft)	Sample Type	Recovery	Sample No.	SPT Values (blw/6 in)	Qu (tsf)	Moisture Content (%)
750.3	Gray SILT; saturated --RDR 2--	25			9	2 4 4	2.13 B	22
750.0	Very stiff, gray SILTY CLAY, trace gravel; damp --RDR 2--				10	4 4 3	2.21 B	24
					11	4 3 6	2.30 B	22
746.3	Loose, gray SILT; saturated --RDR 2--				12	3 5 4	NP	22
744.3	Boring terminated at 30.00 ft	30						
		35						
		40						

GENERAL NOTES

Begin Drilling: 05-18-2021 Complete Drilling: 05-18-2021
Drilling Contractor: Wang Testing Services Drill Rig: 17D50A [87%]
Driller: K&R Logger: I. Nenn Checked by: J. Bensen
Drilling Method: 2.25" ID HSA; boring completed upon completion

WATER LEVEL DATA

While Drilling: 6.00 ft
At Completion of Drilling: 4.00 ft
Time After Drilling: NA
Depth to Water: NA

The stratification lines represent the approximate boundary between soil types; the actual transition may be gradual.

WANGENGINC 7901202.GPJ WANGENG.GDT 6/26/21

BORING LOG BWB-03

Wang Engineering
wangeng@wangeng.com
1145 N Main Street
Lombard, IL 60148
Telephone: 630 953-9928
Fax: 630 953-9938

WEI Job No.: 7901-12-02
Client: TranSystems Corporation
Project: Pedestrian Bridge and Trail over IL 59
Location: Streamwood, IL

Datum: NAVD 88
Elevation: 774.10 ft
North: 1950983.51 ft
East: 1019179.23 ft
Station: 102+74.63
Offset: 37.93 LT

Elevation (ft)	SOIL AND ROCK DESCRIPTION	Depth (ft)	Sample Type	Recovery	Sample No.	SPT Values (blw/6 in)	Qu (tsf)	Moisture Content (%)
773.1	7-inch thick, black SILTY CLAY LOAM --TOPSOIL--							
	Very soft, black, brown to gray PEAT; wet to saturated --RDR 2-1--				1	0 0 0	< 0.08 B	158
		5			2	0 0 0	< 0.08 B	514
					3	0 0 0	< 0.08 B	652
		10			4	0 0 0	< 0.08 B	456
763.6	Very soft gray, organic SILTY CLAY; wet --RDR 1--				5	0 0 0	< 0.08 B	88
		15			6	0 0 0	< 0.08 B	96
758.6	Medium dense, gray SANDY GRAVEL; saturated --RDR 2--				7	7 7 6	NP	13
756.1	Dense, gray, medium to coarse SAND; saturated --RDR 2--	20			8	7 19 25	NP	22

Elevation (ft)	SOIL AND ROCK DESCRIPTION	Depth (ft)	Sample Type	Recovery	Sample No.	SPT Values (blw/6 in)	Qu (tsf)	Moisture Content (%)
753.6	Medium dense to very dense, gray GRAVELLY SAND to SANDY GRAVEL; saturated --RDR 2--				9	7 7 5	NP	13
		25			10	32 31 23	NP	20
					11	38 15 10	NP	9
746.1	Medium dense, gray, fine SAND; saturated --RDR 2--				12	6 5 5	NP	23
744.1	Boring terminated at 30.00 ft	30						
		35						
		40						

GENERAL NOTES

Begin Drilling: 05-10-2021 Complete Drilling: 05-10-2021
Drilling Contractor: Wang Testing Services Drill Rig: 17D50A [87%]
Driller: K&R Logger: M. Rojo Checked by: J. Bensen
Drilling Method: 2.25" ID HSA; boring completed upon completion

WATER LEVEL DATA

While Drilling: 1.50 ft
At Completion of Drilling: 2.00 ft
Time After Drilling: NA
Depth to Water: NA

The stratification lines represent the approximate boundary between soil types; the actual transition may be gradual.

WANGENGINC 7901202.GPJ WANGENG.GDT 6/26/21

BORING LOG BWB-03-B

Wang Engineering
wangeng@wangeng.com
1145 N Main Street
Lombard, IL 60148
Telephone: 630 953-9928
Fax: 630 953-9938

WEI Job No.: 7901-12-02
Client: TranSystems Corporation
Project: Pedestrian Bridge and Trail over IL 59
Location: Streamwood, IL

Datum: NAVD 88
Elevation: 773.90 ft
North: 1950984.20 ft
East: 1019224.66 ft
Station: 102+44.59
Offset: 6.39 LT

Elevation (ft)	SOIL AND ROCK DESCRIPTION	Depth (ft)	Sample Type	Recovery	Sample No.	SPT Values (blw/6 in)	Qu (tsf)	Moisture Content (%)
772.9	12-inch thick, black LOAM; saturated --TOPSOIL--							
	Very soft, black, brown to olive gray PEAT; saturated --RDR 1--				1	0 0 0	< 0.25 P	256
		5			2	0 0 0	< 0.25 P	338
					3	0 0 0	< 0.25 P	686
		10			4	0 0 0	< 0.25 P	596
					5	0 0 0	< 0.25 P	369
768.9	Very soft, gray to black, organic SILTY CLAY to SILTY CLAY LOAM; wet to saturated --RDR 1--	15			6	0 1 1	NA	86
					7	0 0 0	< 0.08 B	87
		20			8	0 0 0	< 0.25 P	53

Elevation (ft)	SOIL AND ROCK DESCRIPTION	Depth (ft)	Sample Type	Recovery	Sample No.	SPT Values (blw/6 in)	Qu (tsf)	Moisture Content (%)
					9	0 0 0	< 0.08 B	48
750.9	Soft, gray SILTY CLAY LOAM; moist --RDR 2--	25			10	3 3 3	0.41 B	24
748.4	Medium dense, gray, coarse SAND; saturated --RDR 2--				11	9 12 9	NP	20
745.9	Medium dense, gray SANDY GRAVEL; saturated --RDR 2--	30			12	12 14 11	NP	11
742.2	Medium dense to dense, gray, coarse SAND, little to some gravel; saturated --RDR 2--	35			13	28 12 7	NP	11
		40			14	9 12 13	NP	6

GENERAL NOTES

Begin Drilling: 05-18-2021 Complete Drilling: 05-18-2021
Drilling Contractor: Wang Testing Services Drill Rig: 17D50A [87%]
Driller: K&R Logger: I. Nenn Checked by: J. Bensen
Drilling Method: 2.25" ID HSA; boring completed upon completion

WATER LEVEL DATA

While Drilling: 0.00 ft
At Completion of Drilling: 0.00 ft
Time After Drilling: NA
Depth to Water: NA

The stratification lines represent the approximate boundary between soil types; the actual transition may be gradual.

WANGENGINC 7901202.GPJ WANGENG.GDT 6/26/21

MODEL: Default
FILE NAME: pw:\\he-pwint01.a-e.transyscorp.com:transyscorp-pw1\Documents\Projects_2021\CH401 - Chicago\P401210087 - Streamwood - Pedestrian Bridge over IL 59 - Phase II\304.00 - Bridge\304.01 - Standard Sheets\BRGLOG3 ‐ SOIL BORING LOGS - 3

5/23/2023 3:12:24 PM

TRANSYSTEMS

USER NAME = lmnainggolan	DESIGNED - JE	REVISED -	
	CHECKED - WJC	REVISED -	
PLOT SCALE = 0.1667 ' / in.	DRAWN - JE	REVISED -	
PLOT DATE = 5/23/2023	CHECKED - WJC	REVISED -	

STATE OF ILLINOIS
DEPARTMENT OF TRANSPORTATION

SOIL BORING LOGS - 3
STRUCTURE NO. 016-8309

SHEET 20 OF 29 SHEETS

F.A.P. RTE.	SECTION	COUNTY	TOTAL SHEETS	SHEET NO.
338	21-00067-00-BR	COOK	90	69
		CONTRACT NO. 61J67		
		ILLINOIS	FED. AID PROJECT	

BORING LOG BWB-03-B

Wang Engineering
wangeng@wangeng.com
1145 N Main Street
Lombard, IL 60148
Telephone: 630 953-9928
Fax: 630 953-9938

WEI Job No.: 7901-12-02
Client: TranSystems Corporation
Project: Pedestrian Bridge and Trail over IL 59
Location: Streamwood, IL

Datum: NAVD 88
Elevation: 773.90 ft
North: 1950884.20 ft
East: 1019224.66 ft
Station: 182+44.59
Offset: 6.39 LT

Elevation (ft)	SOIL AND ROCK DESCRIPTION	Depth (ft)	Sample Type	Recovery	Sample No.	SPT Values (blw/6 in)	Qu (tsf)	Moisture Content (%)
727.2	Very stiff, gray SILTY CLAY, trace gravel; damp --RDR 2--	45			15	12 16 21	NP	6
723.9	Boring terminated at 50.00 ft	50			16	15 4 7	2.05 B	20
		55						
		60						

GENERAL NOTES

Begin Drilling: 05-18-2021 Complete Drilling: 05-18-2021
Drilling Contractor: Wang Testing Services Drill Rig: 17D50A [87%]
Driller: K&R Logger: I. Nenn Checked by: J. Bensen
Drilling Method: 2.25" ID HSA; boring completed upon completion

WATER LEVEL DATA

While Drilling: 0.00 ft
At Completion of Drilling: 0.00 ft
Time After Drilling: NA
Depth to Water: NA

The stratification lines represent the approximate boundary between soil types; the actual transition may be gradual.

BORING LOG BWB-04

Wang Engineering
wangeng@wangeng.com
1145 N Main Street
Lombard, IL 60148
Telephone: 630 953-9928
Fax: 630 953-9938

WEI Job No.: 7901-12-02
Client: TranSystems Corporation
Project: Pedestrian Bridge and Trail over IL 59
Location: Streamwood, IL

Datum: NAVD 88
Elevation: 774.10 ft
North: 1951083.72 ft
East: 1019182.30 ft
Station: 103+56.66
Offset: 10.77 RT

Elevation (ft)	SOIL AND ROCK DESCRIPTION	Depth (ft)	Sample Type	Recovery	Sample No.	SPT Values (blw/6 in)	Qu (tsf)	Moisture Content (%)
773.5	7-inch thick, black SILTY CLAY --TOPSOIL--							
	Very soft, black to brown PEAT; wet to saturated --RDR 1--	0			1	0 0 0	< 0.05 B	211
		5			2	0 0 0	< 0.05 B	247
					3	0 0 0	< 0.05 B	640
		10			4	0 0 0	< 0.05 B	536
					5	0 0 0	< 0.05 B	411
761.1	Loose, gray, fine SAND; moist --RDR 2--	15			6	0 4 5	NP	22
758.6	Very soft, gray, organic SILTY CLAY to SILTY CLAY LOAM; moist to wet --RDR 2--				7	0 0 0	< 0.05 B	105
	--L_L(%)=73, P_I(%)=28-- --%Gravel=0.0-- --%Sand=0.8--	20			8	0 0 0	< 0.05 B	106
	--%Silt=68.8-- --%Clay=30.4-- --A-7-6 (53)--				9	0 0 0	< 0.05 B	72
		25			10	0 0 0	< 0.05 B	68
					11	0 0 0	< 0.05 B	38
746.1	Medium dense to dense, gray, coarse SAND to SANDY LOAM; saturated --RDR 2--	30			12	7 8 10	NP	14
		35			13	13 13 13	NP	22
	--trace gravel--	40			14	25 16 16	NP	16

GENERAL NOTES

Begin Drilling: 05-10-2021 Complete Drilling: 05-11-2021
Drilling Contractor: Wang Testing Services Drill Rig: 17D50A [87%]
Driller: K&A Logger: M. Rojo Checked by: J. Bensen
Drilling Method: 2.25" ID HSA; boring completed upon completion

WATER LEVEL DATA

While Drilling: 2.00 ft
At Completion of Drilling: 1.50 ft
Time After Drilling: NA
Depth to Water: NA

The stratification lines represent the approximate boundary between soil types; the actual transition may be gradual.

BORING LOG BWB-04

Wang Engineering
wangeng@wangeng.com
1145 N Main Street
Lombard, IL 60148
Telephone: 630 953-9928
Fax: 630 953-9938

WEI Job No.: 7901-12-02
Client: TranSystems Corporation
Project: Pedestrian Bridge and Trail over IL 59
Location: Streamwood, IL

Datum: NAVD 88
Elevation: 774.10 ft
North: 1951083.72 ft
East: 1019182.30 ft
Station: 103+56.66
Offset: 10.77 RT

Elevation (ft)	SOIL AND ROCK DESCRIPTION	Depth (ft)	Sample Type	Recovery	Sample No.	SPT Values (blw/6 in)	Qu (tsf)	Moisture Content (%)
	--trace gravel--	45			15	21 16 21	NP	18
727.4	Very stiff, gray SILTY CLAY, trace gravel; damp --RDR 2--							
724.1	Boring terminated at 50.00 ft	50			16	8 8 9	2.21 B	20
		55						
		60						

GENERAL NOTES

Begin Drilling: 05-10-2021 Complete Drilling: 05-11-2021
Drilling Contractor: Wang Testing Services Drill Rig: 17D50A [87%]
Driller: K&A Logger: M. Rojo Checked by: J. Bensen
Drilling Method: 2.25" ID HSA; boring completed upon completion

WATER LEVEL DATA

While Drilling: 2.00 ft
At Completion of Drilling: 1.50 ft
Time After Drilling: NA
Depth to Water: NA

The stratification lines represent the approximate boundary between soil types; the actual transition may be gradual.

Wang Engineering

wangeng@wangeng.com
1145 N Main Street
Lombard, IL 60148
Telephone: 630 953-9928
Fax: 630 953-9938

BORING LOG BWB-05

WEI Job No.: 7901-12-02

Client: TranSystems Corporation
Project: Pedestrian Bridge and Trail over IL 59
Location: Streamwood, IL

Datum: NAVD 88
Elevation: 773.80 ft
North: 1951174.80 ft
East: 1019211.97 ft
Station: 104+66.32
Offset: 18.35 RT

Elevation (ft)	SOIL AND ROCK DESCRIPTION	Depth (ft)	Sample Type	Recovery	Sample No.	SPT Values (blw/6 in)	Qu (tsf)	Moisture Content (%)
773.2	7-inch thick, brown CLAY LOAM --TOPSOIL--							
	Very soft, gray, organic SILTY CLAY; wet --RDR 1--			32	1	0 0 0	< 0.05 B	139
770.8	Very soft, brown PEAT; saturated --RDR 1--							
		5			2	0 0 0	< 0.05 B	511
					3	0 0 0	< 0.05 B	519
		10			4	0 0 0	< 0.05 B	413
					5	0 0 0	< 0.05 B	310
758.8	Very soft to medium stiff, gray, organic SILTY CLAY to SILTY CLAY LOAM; moist to wet --RDR 1--				6	0 0 0	< 0.05 B	92
		15			7	0 0 0	< 0.05 B	62
	--L_L(%)=48, P_I(%)=26-- --%Gravel=0.1-- --%Sand=3.6--	20			8	0 0 0	< 0.05 B	59
750.5	--%Silt=74.8-- --%Clay=21.5-- --A-7-6 (24)--				9	0 0 1	0.50 P	31
	Stiff to hard, gray SILTY CLAY, trace gravel; damp to moist --RDR 2--				10	1 3 8	1.31 B	19
		25			11	3 7 8	1.89 B	19
743.8	Boring terminated at 30.00 ft	30			12	6 9 12	5.17 B	18

GENERAL NOTES

Begin Drilling: 05-05-2021 Complete Drilling: 05-05-2021
Drilling Contractor: Wang Testing Services Drill Rig: 17D50A [87%]
Driller: K&A Logger: M. Rojo Checked by: J. Bensen
Drilling Method: 2.25" ID HSA; boring completed upon completion

WATER LEVEL DATA

While Drilling: 2.00 ft
At Completion of Drilling: DRY
Time After Drilling: NA
Depth to Water: NA

The stratification lines represent the approximate boundary between soil types; the actual transition may be gradual.

Wang Engineering

wangeng@wangeng.com
1145 N Main Street
Lombard, IL 60148
Telephone: 630 953-9928
Fax: 630 953-9938

BORING LOG BWB-06

WEI Job No.: 7901-12-02

Client: TranSystems Corporation
Project: Pedestrian Bridge and Trail over IL 59
Location: Streamwood, IL

Datum: NAVD 88
Elevation: 773.70 ft
North: 1951255.88 ft
East: 1019273.96 ft
Station: 105+70.70
Offset: 1.33 LT

Elevation (ft)	SOIL AND ROCK DESCRIPTION	Depth (ft)	Sample Type	Recovery	Sample No.	SPT Values (blw/6 in)	Qu (tsf)	Moisture Content (%)
773.0	9-inch thick, brown CLAY LOAM --TOPSOIL--							
	Very soft to medium stiff, brown PEAT; moist to wet --RDR 1--				1	0 0 0	0.50 P	88
		5			2	0 0 0	< 0.05 B	480
					3	0 0 0	< 0.05 B	551
		10			4	0 0 0	< 0.05 B	469
					5	0 0 0	< 0.05 B	340
		15			6	0 0 0	< 0.05 B	270
758.2	Very soft, gray, organic SILTY CLAY; wet --RDR 1--				7	3 1 2	< 0.05 B	98
755.7	Very loose, gray SANDY LOAM to fine SAND; saturated --RDR 2--	20			8	0 0 0	NP	23
745.7	Very soft, gray, organic SILTY CLAY to SILTY CLAY LOAM; wet --RDR 1--							
		25			9	2 1 2	NP	19
					10	1 0 1	NP	18
					11	0 0 0	NP	21
		30			12	0 0 0	< 0.05 B	68
					13	0 0 0	< 0.05 B	59
		35			14	0 0 0	< 0.05 B	64
738.2	Stiff, gray SILTY CLAY, trace gravel; damp to moist --RDR 2--				15	2 2 5	1.25 P	20
	--L_L(%)=28, P_I(%)=14-- --%Gravel=7.0-- --%Sand=15.4--	40			16	4 6 9	1.56 B	19
733.7								

GENERAL NOTES

Begin Drilling: 05-05-2021 Complete Drilling: 05-05-2021
Drilling Contractor: Wang Testing Services Drill Rig: 17D50A [87%]
Driller: K&A Logger: M. Rojo Checked by: J. Bensen
Drilling Method: 2.25" ID HSA; boring completed upon completion

WATER LEVEL DATA

While Drilling: 18.00 ft
At Completion of Drilling: 20.00 ft
Time After Drilling: NA
Depth to Water: NA

The stratification lines represent the approximate boundary between soil types; the actual transition may be gradual.

Wang Engineering

wangeng@wangeng.com
1145 N Main Street
Lombard, IL 60148
Telephone: 630 953-9928
Fax: 630 953-9938

BORING LOG BWB-06

WEI Job No.: 7901-12-02

Client: TranSystems Corporation
Project: Pedestrian Bridge and Trail over IL 59
Location: Streamwood, IL

Datum: NAVD 88
Elevation: 773.70 ft
North: 1951255.88 ft
East: 1019273.96 ft
Station: 105+70.70
Offset: 1.33 LT

Elevation (ft)	SOIL AND ROCK DESCRIPTION	Depth (ft)	Sample Type	Recovery	Sample No.	SPT Values (blw/6 in)	Qu (tsf)	Moisture Content (%)
	--%Silt=49.4-- --%Clay=28.3-- --A-6 (9)--							
	Boring terminated at 40.00 ft							
		45						
		50						
		55						
		60						

GENERAL NOTES

Begin Drilling: 05-05-2021 Complete Drilling: 05-05-2021
Drilling Contractor: Wang Testing Services Drill Rig: 17D50A [87%]
Driller: K&A Logger: M. Rojo Checked by: J. Bensen
Drilling Method: 2.25" ID HSA; boring completed upon completion

WATER LEVEL DATA

While Drilling: 18.00 ft
At Completion of Drilling: 20.00 ft
Time After Drilling: NA
Depth to Water: NA

The stratification lines represent the approximate boundary between soil types; the actual transition may be gradual.

BORING LOG BWB-06-SH

Wang Engineering
wangeng@wangeng.com
1145 N Main Street
Lombard, IL 60148
Telephone: 630 953-9928
Fax: 630 953-9938

WEI Job No.: 7901-12-02
Client: TranSystems Corporation
Project: Pedestrian Bridge and Trail over IL 59
Location: Streamwood, IL

Datum: NAVD 88
Elevation: 773.60 ft
North: 1951251.94 ft
East: 1019275.80 ft
Station: 105+69.68
Offset: 2.97 RT

Elevation (ft)	SOIL AND ROCK DESCRIPTION	Depth (ft)	Sample Type	Recovery	Sample No.	SPT Values (blw/6 in)	Qu (tsf)	Moisture Content (%)
	Blind drill to 8.0 feet							
765.6	Very soft, brown PEAT; moist				1	PUSH	< 0.05 B	485
761.6	Blind drill from 12.0 to 40.0 feet				2	PUSH	0.25 P	364
733.6								

Depth scale: 5, 10, 15, 20, 25, 30, 35, 40

GENERAL NOTES

Begin Drilling: 05-10-2021 Complete Drilling: 05-10-2021
Drilling Contractor: Wang Testing Services Drill Rig: 17D50A [87%]
Driller: K&A Logger: M. Rojo Checked by: J. Bensen
Drilling Method: 2.25" ID HSA; boring completed upon completion

WATER LEVEL DATA

While Drilling: DRY
At Completion of Drilling: MUD
Time After Drilling: NA
Depth to Water: NA

The stratification lines represent the approximate boundary between soil types; the actual transition may be gradual.

BORING LOG BWB-06-SH

Wang Engineering
wangeng@wangeng.com
1145 N Main Street
Lombard, IL 60148
Telephone: 630 953-9928
Fax: 630 953-9938

WEI Job No.: 7901-12-02
Client: TranSystems Corporation
Project: Pedestrian Bridge and Trail over IL 59
Location: Streamwood, IL

Datum: NAVD 88
Elevation: 773.60 ft
North: 1951251.94 ft
East: 1019275.80 ft
Station: 105+69.68
Offset: 2.97 RT

Elevation (ft)	SOIL AND ROCK DESCRIPTION	Depth (ft)	Sample Type	Recovery	Sample No.	SPT Values (blw/6 in)	Qu (tsf)	Moisture Content (%)
	Stiff to very stiff, gray SILTY CLAY, trace gravel; damp to moist --RDR 2--	45			17	7 10 14	1.89 B	
		50			18	8 11 15	2.05 B	
		55			19	5 10 13	2.71 B	
713.6	Boring terminated at 60.00 ft	60			20	6 9 9	1.80 B	

Depth scale: 25, 30, 35, 40

GENERAL NOTES

Begin Drilling: 05-10-2021 Complete Drilling: 05-10-2021
Drilling Contractor: Wang Testing Services Drill Rig: 17D50A [87%]
Driller: K&A Logger: M. Rojo Checked by: J. Bensen
Drilling Method: 2.25" ID HSA; boring completed upon completion

WATER LEVEL DATA

While Drilling: DRY
At Completion of Drilling: MUD
Time After Drilling: NA
Depth to Water: NA

The stratification lines represent the approximate boundary between soil types; the actual transition may be gradual.

BORING LOG BWB-07

Wang Engineering
wangeng@wangeng.com
1145 N Main Street
Lombard, IL 60148
Telephone: 630 953-9928
Fax: 630 953-9938

WEI Job No.: 7901-12-02
Client: TranSystems Corporation
Project: Pedestrian Bridge and Trail over IL 59
Location: Streamwood, IL

Datum: NAVD 88
Elevation: 774.50 ft
North: 1951438.44 ft
East: 1029161.06 ft
Station: 114+78.03
Offset: 3.09 LT

Elevation (ft)	SOIL AND ROCK DESCRIPTION	Depth (ft)	Sample Type	Recovery	Sample No.	SPT Values (blw/6 in)	Qu (tsf)	Moisture Content (%)
773.8	8-inch thick, black CLAY LOAM --TOPSOIL--							
	Very soft to soft, black, brown to gray organic SILTY CLAY LOAM to SILTY CLAY; moist to wet --RDR 2--				1	1 1 2	0.25 P	51
		5			2	0 0 1	< 0.05 B	145
	--L_L(%)=82, P_I(%)=36-- --%Gravel=0.0-- --%Sand=6.4-- --%Silt=71.2-- --%Clay=22.4-- --A-7-5 (53)--				3	0 0 0	< 0.05 B	110
		10			4	0 0 0	< 0.05 B	47
764.0	Medium stiff to very stiff, gray SILTY CLAY LOAM to SILTY CLAY, trace gravel; moist to wet --RDR 2--				5	1 2 3	1.00 P	16
		15			6	2 4 5	0.82 B	18
					7	9 8 8	NR	
		20			8	6 8 10	3.94 B	16
751.5	Very dense, gray SANDY GRAVEL, some cobble fragments; saturated --RDR 3-- --rig chatter; possible cobbles--				9	3 4 7	1.89 B	21
					10	50/2"	NP	19
749.0	Stiff to very stiff, gray SILTY CLAY, trace gravel; moist --RDR 2--				11	7 9 13	2.00 P	21
744.5	Boring terminated at 30.00 ft	30			12	4 6 8	1.39 B	19

Depth scale: 35, 40

GENERAL NOTES

Begin Drilling: 05-03-2021 Complete Drilling: 05-03-2021
Drilling Contractor: Wang Testing Services Drill Rig: 17D50A [87%]
Driller: K&A Logger: M. Rojo Checked by: J. Bensen
Drilling Method: 2.25" ID HSA; boring completed upon completion

WATER LEVEL DATA

While Drilling: 13.00 ft
At Completion of Drilling: 3.00 ft
Time After Drilling: NA
Depth to Water: NA

The stratification lines represent the approximate boundary between soil types; the actual transition may be gradual.

Wang Engineering

wangeng@wangeng.com
1145 N Main Street
Lombard, IL 60148
Telephone: 630 953-9928
Fax: 630 953-9938

BORING LOG BWB-08

WEI Job No.: 7901-12-02

Client: TranSystems Corporation
Project: Pedestrian Bridge and Trail over IL 59
Location: Streamwood, IL

Datum: NAVD 88
Elevation: 774.60 ft
North: 1951456.35 ft
East: 1020255.11 ft
Station: 115+73.40
Offset: 4.83 LT

Elevation (ft)	SOIL AND ROCK DESCRIPTION	Depth (ft)	Sample Type / Recovery	Sample No.	SPT Values (blw/6 in)	Qu (tsf)	Moisture Content (%)
774.3	4-inch thick, black CLAY LOAM --TOPSOIL--						
	Soft to medium stiff, black to gray, SILTY CLAY LOAM, organic matter; moist --RDR 2--		X	1	1 1 3	0.41 B	48
		5	X	2	0 1 1	0.50 P	59
769.1	Very soft to stiff, brown to gray PEAT; wet --RDR 2--		X	3	0 0 0	<0.06 B	199
		10	X	4	0 0 0	<0.06 B	61
			X	5	0 0 1	1.00 P	69
761.6	Medium stiff to hard, gray SILTY CLAY to SILTY CLAY LOAM, trace to little gravel; damp to wet --wood fragments-- --RDR 2--	15	X	6	1 3 4	0.98 B	17
	--L_L(%)=28, P_I(%)=14-- --%Gravel=5.1-- --%Sand=15.5-- --%Silt=50.5-- --%Clay=29.0-- --A-6 (9)--		X	7	3 4 5	0.57 B	19
		20	X	8	6 6 9	1.25 P	18
744.6	Boring terminated at 30.00 ft	30					
		35					
		40					

Elevation (ft)	Sample Type / Recovery	Sample No.	SPT Values (blw/6 in)	Qu (tsf)	Moisture Content (%)
	X	9	5 10 12	5.33 B	18
	X	10	10 8 12	1.07 B	17
	X	11	8 7 12	3.03 B	14
	X	12	8 11 10	5.33 B	18

GENERAL NOTES

Begin Drilling: 05-04-2021 Complete Drilling: 05-04-2021
Drilling Contractor: Wang Testing Services Drill Rig: 17D50A [87%]
Driller: K&A Logger: M. Rojo Checked by: J. Bensen
Drilling Method: 2.25" ID HSA; boring completed upon completion

WATER LEVEL DATA

While Drilling: DRY
At Completion of Drilling: DRY
Time After Drilling: NA
Depth to Water: NA

The stratification lines represent the approximate boundary between soil types; the actual transition may be gradual.

WANGENGINC 7901202.GPJ WANGENG.GDT 8/26/21

Wang Engineering

wangeng@wangeng.com
1145 N Main Street
Lombard, IL 60148
Telephone: 630 953-9928
Fax: 630 953-9938

BORING LOG BWB-09

WEI Job No.: 7901-12-02

Client: TranSystems Corporation
Project: Pedestrian Bridge and Trail over IL 59
Location: Streamwood, IL

Datum: NAVD 88
Elevation: 775.60 ft
North: 1951444.59 ft
East: 1020360.93 ft
Station: 116+78.97
Offset: 3.22 LT

Elevation (ft)	SOIL AND ROCK DESCRIPTION	Depth (ft)	Sample Type / Recovery	Sample No.	SPT Values (blw/6 in)	Qu (tsf)	Moisture Content (%)
775.0	7-inch thick, black CLAY LOAM --TOPSOIL--						
	Medium stiff to hard, brown to gray SILTY CLAY to SILTY CLAY LOAM, trace gravel; moist --RDR 2--		X	1	2 2 6	0.74 S	17
		5	X	2	3 5 9	3.03 B	18
			X	3	4 6 7	3.69 B	15
		10	X	4	3 6 8	1.56 B	15
			X	5	6 7 10	2.79 B	16
	--cobble fragments--	15	X	6	4 7 7	3.12 B	17
	--cobble fragments--		X	7	4 7 8	2.21 B	18
		20	X	8	4 6 7	2.05 B	20
745.6	Boring terminated at 30.00 ft	30					
		35					
		40					

Elevation (ft)	Sample Type / Recovery	Sample No.	SPT Values (blw/6 in)	Qu (tsf)	Moisture Content (%)
	X	9	4 5 11	1.72 B	19
	○	10	10 12 14	NR	
	X	11	5 8 26	5.06 B	16
	X	12	3 10 8	2.62 B	16

GENERAL NOTES

Begin Drilling: 04-29-2021 Complete Drilling: 04-29-2021
Drilling Contractor: Wang Testing Services Drill Rig: 17D50A [87%]
Driller: K&A Logger: M. Rojo Checked by: J. Bensen
Drilling Method: 2.25" ID HSA; boring completed upon completion

WATER LEVEL DATA

While Drilling: 30.00 ft
At Completion of Drilling: 30.00 ft
Time After Drilling: NA
Depth to Water: NA

The stratification lines represent the approximate boundary between soil types; the actual transition may be gradual.

WANGENGINC 7901202.GPJ WANGENG.GDT 8/26/21

Wang Engineering

wangeng@wangeng.com
1145 N Main Street
Lombard, IL 60148
Telephone: 630 953-9928
Fax: 630 953-9938

BORING LOG BWB-10

WEI Job No.: 7901-12-02

Client: TranSystems Corporation
Project: Pedestrian Bridge and Trail over IL 59
Location: Streamwood, IL

Datum: NAVD 88
Elevation: 776.10 ft
North: 1951430.03 ft
East: 1020442.25 ft
Station: 117+55.28
Offset: 24.30 LT

Elevation (ft)	SOIL AND ROCK DESCRIPTION	Depth (ft)	Sample Type / Recovery	Sample No.	SPT Values (blw/6 in)	Qu (tsf)	Moisture Content (%)
776.0	7-inch thick, black SILTY CLAY LOAM --TOPSOIL--						
	Stiff to very stiff, brown to gray SILTY CLAY, trace gravel; damp to moist --RDR 2--		X	1	2 5 10	1.64 B	17
		5	X	2	5 6 10	1.07 B	19
			X	3	5 9 12	3.53 B	16
		10	X	4	5 6 10	3.44 B	16
			X	5	3 7 6	2.00 P	15
763.1	Medium stiff, gray, gravelly CLAY LOAM; moist to wet --RDR 2-- --L_L(%)=28, P_I(%)=13-- --%Gravel=16.0-- --%Sand=32.0-- --%Silt=31.3-- --%Clay=20.7-- --A-6 (4)--	15	X	6	2 3 5	0.82 B	15
759.6	Soft to stiff, gray SILTY CLAY LOAM to SILTY CLAY, trace gravel; damp to moist --RDR 2--		X	7	4 6 8	1.48 B	22
		20	X	8	5 7 8	1.48 B	18
746.1	Boring terminated at 30.00 ft	30					
		35					
		40					

Elevation (ft)	Sample Type / Recovery	Sample No.	SPT Values (blw/6 in)	Qu (tsf)	Moisture Content (%)
	X	9	5 13 10	0.41 B	17
	X	10	5 6 10	1.23 B	15
	X	11	3 6 9	1.56 B	18
	X	12	4 6 9	1.39 B	17

GENERAL NOTES

Begin Drilling: 04-29-2021 Complete Drilling: 04-29-2021
Drilling Contractor: Wang Testing Services Drill Rig: 17D50A [87%]
Driller: K&A Logger: M. Rojo Checked by: J. Bensen
Drilling Method: 2.25" ID HSA; boring completed upon completion

WATER LEVEL DATA

While Drilling: 13.00 ft
At Completion of Drilling: 13.00 ft
Time After Drilling: NA
Depth to Water: NA

The stratification lines represent the approximate boundary between soil types; the actual transition may be gradual.

WANGENGINC 7901202.GPJ WANGENG.GDT 8/26/21

MODEL: Default
FILE NAME: pw:\\he-pwint01.a-e.transyscorp.com:transyscorp-pw1\Documents\Projects_2021\CH401 - Chicago\P401210087 - Streamwood - Pedestrian Bridge over IL 59 - Phase II\304.00 - Bridge\304.01 - Standard Sheets\BRGLOG7 &slash; SOIL BORING LOGS - 7

5/23/2023 3:12:48 PM

TRANSYSTEMS

USER NAME = lmnainggolan	DESIGNED - JE	REVISED -	
	CHECKED - WJC	REVISED -	
PLOT SCALE = 0.1667 ' / in.	DRAWN - JE	REVISED -	
PLOT DATE = 5/23/2023	CHECKED - WJC	REVISED -	

STATE OF ILLINOIS
DEPARTMENT OF TRANSPORTATION

SOIL BORING LOGS - 7
STRUCTURE NO. 016-8309

SHEET 24 OF 29 SHEETS

F.A.P. RTE.	SECTION	COUNTY	TOTAL SHEETS	SHEET NO.
338	21-00067-00-BR	COOK	90	73
		CONTRACT NO. 61J67		
		ILLINOIS	FED. AID PROJECT	

Wang Engineering

wangeng@wangeng.com
1145 N Main Street
Lombard, IL 60148
Telephone: 630 953-9928
Fax: 630 953-9938

BORING LOG BWB-11

WEI Job No.: 7901-12-02

Client: TranSystems Corporation
Project: Pedestrian Bridge and Trail over IL 59
Location: Streamwood, IL

Datum: NAVD 88
Elevation: 775.40 ft
North: 1951398.61 ft
East: 1020558.16 ft
Station: 118+94.21
Offset: 31.17 LT

Elevation (ft)	SOIL AND ROCK DESCRIPTION	Depth (ft)	Sample Type / Recovery	Sample No.	SPT Values (blw/6 in)	Qu (tsf)	Moisture Content (%)
774.7	9-inch thick, black CLAY LOAM --TOPSOIL--						
	Soft to stiff, black to gray SILTY CLAY, trace organic matter; moist --RDR 2--			1	1 3 3	1.80 B	31
		5		2	2 2 5	0.33 B	45
769.9	Stiff to hard, brown to gray SILTY CLAY LOAM to SILTY CLAY, trace gravel; damp to moist --RDR 2--			3	1 2 5	1.00 P	17
		10		4	5 6 8	1.39 B	16
		15		5	3 5 8	3.69 B	16
				6	3 8 9	3.85 B	15
		20		7	7 9 12	4.92 B	15
				8	8 13 11	3.69 B	16
745.4	Boring terminated at 30.00 ft	30					
		25		9	3 8 10	2.46 B	18
				10	4 6 11	3.61 B	17
				11	6 8 10	2.30 B	19
				12	4 8 8	2.05 B	19
		35					
		40					

GENERAL NOTES

Begin Drilling: 04-28-2021 Complete Drilling: 04-28-2021
Drilling Contractor: Wang Testing Services Drill Rig: 17D50A [87%]
Driller: K&A Logger: M. Rojo Checked by: J. Bensen
Drilling Method: 2.25" ID HSA; boring completed upon completion

WATER LEVEL DATA

While Drilling: DRY
At Completion of Drilling: DRY
Time After Drilling: NA
Depth to Water: NA

The stratification lines represent the approximate boundary between soil types; the actual transition may be gradual.

WANGENGINC 7901120D.GPJ WANGENG.GDT 8/28/21

Wang Engineering

wangeng@wangeng.com
1145 N Main Street
Lombard, IL 60148
Telephone: 630 953-9928
Fax: 630 953-9938

BORING LOG BWB-12

WEI Job No.: 7901-12-02

Client: TranSystems Corporation
Project: Pedestrian Bridge and Trail over IL 59
Location: Streamwood, IL

Datum: NAVD 88
Elevation: 775.90 ft
North: 1951368.16 ft
East: 1020655.74 ft
Station: 119+93.97
Offset: 4.85 RT

Elevation (ft)	SOIL AND ROCK DESCRIPTION	Depth (ft)	Sample Type / Recovery	Sample No.	SPT Values (blw/6 in)	Qu (tsf)	Moisture Content (%)
775.9	6-inch thick, black CLAY LOAM --TOPSOIL--						
	Very soft to stiff, black to gray SILTY CLAY, trace organic matter; moist --RDR 2--			1	0 0 2	1.25 P	40
		5		2	1 2 3	0.16 B	39
770.4	Loose, gray SILTY LOAM; wet --RDR 2-- --L_L(%)=31, P_I(%)=17-- --%Gravel=4.6-- --%Sand=10.8-- --%Silt=67.3-- --%Clay=17.3-- --A-6 (11)--			3	1 2 3	0.08 B	22
767.9	Soft to very stiff, brown to gray SILTY CLAY, trace gravel; damp to moist --RDR 2--	10		4	1 2 6	0.49 B	20
		15		5	5 3 5	1.48 B	18
				6	3 5 7	2.46 B	17
		20		7	4 4 7	2.05 B	17
				8	5 6 9	2.71 B	18
745.9	Boring terminated at 30.00 ft	30					
		25		9	5 7 9	2.79 B	19
				10	5 6 9	2.71 B	19
				11	4 4 8	1.97 B	21
				12	4 6 7	2.05 B	21
		35					
		40					

GENERAL NOTES

Begin Drilling: 04-28-2021 Complete Drilling: 04-28-2021
Drilling Contractor: Wang Testing Services Drill Rig: 17D50A [87%]
Driller: K&A Logger: M. Rojo Checked by: J. Bensen
Drilling Method: 2.25" ID HSA; boring completed upon completion

WATER LEVEL DATA

While Drilling: DRY
At Completion of Drilling: DRY
Time After Drilling: NA
Depth to Water: NA

The stratification lines represent the approximate boundary between soil types; the actual transition may be gradual.

WANGENGINC 7901120D.GPJ WANGENG.GDT 8/28/21

Wang Engineering

wangeng@wangeng.com
1145 N Main Street
Lombard, IL 60148
Telephone: 630 953-9928
Fax: 630 953-9938

BORING LOG BWB-13

WEI Job No.: 7901-12-02

Client: TranSystems Corporation
Project: Pedestrian Bridge and Trail over IL 59
Location: Streamwood, IL

Datum: NAVD 88
Elevation: 776.10 ft
North: 1951362.07 ft
East: 1020747.35 ft
Station: 120+88.03
Offset: 13.68 RT

Elevation (ft)	SOIL AND ROCK DESCRIPTION	Depth (ft)	Sample Type / Recovery	Sample No.	SPT Values (blw/6 in)	Qu (tsf)	Moisture Content (%)
775.6	7-inch thick, black CLAY LOAM --TOPSOIL--						
	Soft to medium stiff, gray SILTY CLAY, trace organic matter; damp to moist --RDR 2--			1	3 2 4	0.74 B	34
		5		2	0 1 4	0.41 B	56
770.6	Soft to very stiff, brown to gray SILTY CLAY to SILTY CLAY LOAM, trace gravel; damp to moist --RDR 2--			3	0 2 3	0.41 B	20
		10		4	1 4 5	0.25 B	16
		15		5	5 4 6	0.82 B	16
				6	4 5 10	3.85 B	15
		20		7	4 8 10	3.53 B	16
				8	5 8 9	2.05 B	18
746.1	Boring terminated at 30.00 ft	30					
	--L_L(%)=34, P_I(%)=15-- --%Gravel=2.1-- --%Sand=9.1-- --%Silt=52.1-- --%Clay=36.7-- --A-6 (16)--	25		9	5 6 7	1.64 B	21
				10	3 4 6	1.89 B	21
				11	5 6 7	1.56 B	20
	--moist to wet--			12	1 5 7	1.97 B	14
		35					
		40					

GENERAL NOTES

Begin Drilling: 04-28-2021 Complete Drilling: 04-28-2021
Drilling Contractor: Wang Testing Services Drill Rig: 17D50A [87%]
Driller: K&A Logger: M. Rojo Checked by: J. Bensen
Drilling Method: 2.25" ID HSA; boring completed upon completion

WATER LEVEL DATA

While Drilling: 30.00 ft
At Completion of Drilling: 30.00 ft
Time After Drilling: NA
Depth to Water: NA

The stratification lines represent the approximate boundary between soil types; the actual transition may be gradual.

WANGENGINC 7901120D.GPJ WANGENG.GDT 8/28/21

Wang Engineering

wangeng@wangeng.com
1145 N Main Street
Lombard, IL 60148
Telephone: 630 953-9928
Fax: 630 953-9938

BORING LOG BWB-14

WEI Job No.: 7901-12-02

Client: TranSystems Corporation
Project: Pedestrian Bridge and Trail over IL 59
Location: Streamwood, IL

Datum: NAVD 88
Elevation: 776.20 ft
North: 1951366.61 ft
East: 1020847.58 ft
Station: 121+86.26
Offset: 11.82 LT

Elevation (ft)	SOIL AND ROCK DESCRIPTION	Depth (ft)	Sample Type	Recovery	Sample No.	SPT Values (blw/6 in)	Qu (tsf)	Moisture Content (%)
775.6	7-inch thick, black CLAY LOAM --TOPSOIL--							
	Stiff, black SILTY CLAY, trace organic matter; moist --RDR 2--				1	4 4 6	1.00 P	30
773.2	Very soft to soft, gray, SILTY CLAY to SILTY CLAY LOAM, organic matter; moist to wet --RDR 2--				2	1 2 2	0.08 B	61
					3	0 1 1	0.33 B	57
	$-L_L(\%)=63$, $P_I(\%)=24$-- --%Gravel=0.0-- --%Sand=2.3-- --%Silt=70.7-- --%Clay=26.9-- --A-7-6 (44)--				4	0 1 1	< 0.08 B	65
					5	1 2 4	0.08 B	33
763.2	Very stiff to hard, brown to gray SILTY CLAY to SILTY CLAY LOAM, trace gravel; damp to moist --RDR 2--				6	2 3 6	2.05 B	20
					7	5 8 9	4.43 B	17
					8	5 9 12	3.85 B	15
746.2	Boring terminated at 30.00 ft							

GENERAL NOTES		WATER LEVEL DATA	
Begin Drilling: 04-28-2021	Complete Drilling: 04-28-2021	While Drilling: DRY	
Drilling Contractor: Wang Testing Services	Drill Rig: 17D50A [87%]	At Completion of Drilling: DRY	
Driller: K&A	Logger: M. Rojo	Checked by: J. Bensen	Time After Drilling: NA
Drilling Method: 2.25" ID HSA; boring completed upon completion		Depth to Water: NA	

The stratification lines represent the approximate boundary between soil types; the actual transition may be gradual.

WANGENGINC 7901202.GPJ WANGENG.GDT 8/26/21

Wang Engineering

wangeng@wangeng.com
1145 N Main Street
Lombard, IL 60148
Telephone: 630 953-9928
Fax: 630 953-9938

BORING LOG BWB-15

WEI Job No.: 7901-12-02

Client: TranSystems Corporation
Project: Pedestrian Bridge and Trail over IL 59
Location: Streamwood, IL

Datum: NAVD 88
Elevation: 780.80 ft
North: 1951332.60 ft
East: 1020929.18 ft
Station: 122+63.11
Offset: 22.36 LT

Elevation (ft)	SOIL AND ROCK DESCRIPTION	Depth (ft)	Sample Type	Recovery	Sample No.	SPT Values (blw/6 in)	Qu (tsf)	Moisture Content (%)
780.2	7-inch thick, brown SILTY CLAY LOAM --TOPSOIL--							
	Medium stiff to hard, gray to brown SILTY CLAY; damp to moist --FILL-- --RDR 2--				1	5 6 5	0.50 P	20
					2	5 5 7	5.08 B	16
775.3	Very stiff, brown CLAY LOAM, trace gravel; damp --FILL-- --RDR 2--				3	3 7 13	2.50 P	12
772.8	Medium dense, brown SANDY LOAM, trace gravel; damp --FILL-- --RDR 2--				4	4 10 15	NP	8
770.3	Stiff to hard, gray SILTY CLAY to SILTY CLAY LOAM, trace gravel; damp to wet --RDR 2--				5	4 8 13	6.13 B	17
					6	6 9 13	6.72 B	17
					7	3 4 8	1.80 B	20
					8	19 13 7	1.50 P	22
750.8	Boring terminated at 30.00 ft							

GENERAL NOTES		WATER LEVEL DATA	
Begin Drilling: 04-29-2021	Complete Drilling: 04-29-2021	While Drilling: 18.50 ft	
Drilling Contractor: Wang Testing Services	Drill Rig: 17D50A [87%]	At Completion of Drilling: DRY	
Driller: K&A	Logger: M. Rojo	Checked by: J. Bensen	Time After Drilling: NA
Drilling Method: 2.25" ID HSA; boring completed upon completion		Depth to Water: NA	

The stratification lines represent the approximate boundary between soil types; the actual transition may be gradual.

WANGENGINC 7901202.GPJ WANGENG.GDT 8/26/21

Wang Engineering

wangeng@wangeng.com
1145 N Main Street
Lombard, IL 60148
Telephone: 630 953-9928
Fax: 630 953-9938

BORING LOG TB-01

WEI Job No.: 7901-12-02

Client: TranSystems Corporation
Project: Pedestrian Bridge and Trail over IL 59
Location: Streamwood, IL

Datum: NAVD 88
Elevation: 774.00 ft
North: 1951279.67 ft
East: 1019356.23 ft
Station: 196+57.42
Offset: 9.56 RT

Elevation (ft)	SOIL AND ROCK DESCRIPTION	Depth (ft)	Sample Type	Recovery	Sample No.	SPT Values (blw/6 in)	Qu (tsf)	Moisture Content (%)
773.6	5-inch thick, black SILTY CLAY LOAM --TOPSOIL--							
	Medium stiff, brown, SILTY CLAY, organic matter; wet --RDR 2--				1	0 0 0	0.50 P	95
771.0	Very soft to medium stiff, black, brown to gray PEAT; moist --RDR 1-2--				2	0 0 0	0.50 P	113
					3	0 0 0	< 0.08 B	357
					4	0 0 0	< 0.08 B	295
					5	0 3 3	< 0.08 B	220
761.0	Very loose, gray SANDY LOAM; wet --RDR 2--				6	0 0 0	< 0.08 B	42
758.5	Very soft to medium stiff, gray SILTY CLAY LOAM; damp to moist --RDR 2--				7	0 0 0	0.16 B	22
	$-L_L(\%)=31$, $P_I(\%)=14$-- --%Gravel=3.8-- --%Sand=13.7--				8	3 5 5	0.50 P	24
753.5	--%Silt=53.8-- --%Clay=28.7-- --A-6 (12)--							
	Stiff to very stiff, gray SILTY CLAY, trace gravel; damp --RDR 2--				9	2 4 5	1.39 B	20
	$-L_L(\%)=31$, $P_I(\%)=15$-- --%Gravel=3.2-- --%Sand=15.1-- --%Silt=52.6-- --%Clay=29.1-- --A-6 (11)--				10	3 5 6	1.64 B	20
					11	2 5 6	2.38 B	18
					12	5 8 9	2.13 B	20
					13	6 9 14	2.54 B	20
					14	5 6 8	1.48 B	19

GENERAL NOTES		WATER LEVEL DATA	
Begin Drilling: 05-06-2021	Complete Drilling: 05-06-2021	While Drilling: 13.50 ft	
Drilling Contractor: Wang Testing Services	Drill Rig: 17D50A [87%]	At Completion of Drilling: MUD	
Driller: K&A	Logger: M. Rojo	Checked by: J. Bensen	Time After Drilling: NA
Drilling Method: 2.25" ID HSA to 25', mud rotary thereafter; boring backfilled upon completion		Depth to Water: NA	

The stratification lines represent the approximate boundary between soil types; the actual transition may be gradual.

WANGENGINC 7901202.GPJ WANGENG.GDT 8/26/21

BORING LOG TB-01

Wang Engineering
wangeng@wangeng.com
1145 N Main Street
Lombard, IL 60148
Telephone: 630 953-9928
Fax: 630 953-9938

WEI Job No.: 7901-12-02
Client: TranSystems Corporation
Project: Pedestrian Bridge and Trail over IL 59
Location: Streamwood, IL

Datum: NAVD 88
Elevation: 774.00 ft
North: 1951279.67 ft
East: 1019356.23 ft
Station: 106+57.42
Offset: 9.56 RT

Elevation (ft)	SOIL AND ROCK DESCRIPTION	Depth (ft)	Sample Type / Recovery	Sample No.	SPT Values (blw/6 in)	Qu (tsf)	Moisture Content (%)
772.3	Hard, gray SILTY CLAY LOAM, trace gravel; damp to moist --RDR 3-4-- --rig chatter, 60.0 to 68.0 feet--	45		15	5 10 12	2.64 B	26
767.3	Medium dense, gray, coarse SAND, little gravel; saturated --RDR 3-- --rig chatter, possible cobbles--	50		16	4 5 10	1.64 B	23
762.3	Dense, gray SANDY GRAVEL; saturated --RDR 3-- --rig chatter, possible cobbles--	55		17	7 9 12	2.30 B	15
759.5	--RDR 3-- --rig chatter; possible cobbles--						
716.5	Very dense, gray, fine SAND, trace cobble fragments; saturated --RDR 2-3--	60		18	6 23 31	NP	10
699.0	Boring terminated at 75.00 ft	65		19	14 17 15	4.00 P	13
		70		20	11 10 14	NP	14
		75		21	10 13 18	NP	14
		80					

GENERAL NOTES

Begin Drilling: 05-06-2021 Complete Drilling: 05-06-2021
Drilling Contractor: Wang Testing Services Drill Rig: 17D50A [87%]
Driller: K&A Logger: M. Rojo Checked by: J. Bensen
Drilling Method: 2.25" ID HSA to 25', mud rotary thereafter; boring backfilled upon completion

WATER LEVEL DATA

While Drilling: 13.50 ft
At Completion of Drilling: MUD
Time After Drilling: NA
Depth to Water: NA

The stratification lines represent the approximate boundary between soil types; the actual transition may be gradual.

BORING LOG TB-02

Wang Engineering
wangeng@wangeng.com
1145 N Main Street
Lombard, IL 60148
Telephone: 630 953-9928
Fax: 630 953-9938

WEI Job No.: 7901-12-02
Client: TranSystems Corporation
Project: Pedestrian Bridge and Trail over IL 59
Location: Streamwood, IL

Datum: NAVD 88
Elevation: 773.60 ft
North: 1951301.99 ft
East: 1019454.49 ft
Station: 107+58.45
Offset: 5.27 RT

Elevation (ft)	SOIL AND ROCK DESCRIPTION	Depth (ft)	Sample Type / Recovery	Sample No.	SPT Values (blw/6 in)	Qu (tsf)	Moisture Content (%)
772.3	8-inch thick, brown SILTY CLAY LOAM --TOPSOIL--						
771.5	Stiff, brown,SILTY CLAY, organic matter; moist --RDR 2--			1	0 0 0	1.00 P	87
770.6	Very soft, brown PEAT; moist --RDR 1--	5		2	0 0 0	< 0.08 B	269
				3	0 0 0	< 0.08 B	256
		10		4	0 0 0	< 0.08 B	295
				5	0 0 0	< 0.08 B	266
		15		6	0 0 0	< 0.08 B	217
758.1	Very soft to medium stiff, brown SILTY CLAY LOAM, trace gravel; moist --RDR 1--			7	0 0 0	0.50 P	23
	--L_L(%)=28, P_I(%)=14-- --%Gravel=5.8-- --%Sand=16.5--	20		8	0 0 0	0.08 B	21
753.1	--%Silt=51.6-- --%Clay=26.0-- --A-6 (9)-- Stiff to hard, gray SILTY CLAY, trace gravel; damp to moist --RDR 2--	25		9	5 8 10	4.26 B	18
				10	4 6 10	4.51 B	17
				11	4 6 8	2.46 B	20
		30		12	4 6 9	1.97 B	21
	--L_L(%)=35, P_I(%)=15-- --%Gravel=0.3-- --%Sand=0.8-- --%Silt=54.7-- --%Clay=44.2-- --A-6 (20)--	35		13	6 9 10	2.46 B	23
		40		14	4 4 6	2.62 B	23

GENERAL NOTES

Begin Drilling: 05-07-2021 Complete Drilling: 05-07-2021
Drilling Contractor: Wang Testing Services Drill Rig: 17D50A [87%]
Driller: K&A Logger: M. Rojo Checked by: J. Bensen
Drilling Method: 2.25" ID HSA to 30', mud rotary thereafter; boring backfilled upon completion

WATER LEVEL DATA

While Drilling: 16.00 ft
At Completion of Drilling: MUD
Time After Drilling: NA
Depth to Water: NA

The stratification lines represent the approximate boundary between soil types; the actual transition may be gradual.

BORING LOG TB-02

Wang Engineering
wangeng@wangeng.com
1145 N Main Street
Lombard, IL 60148
Telephone: 630 953-9928
Fax: 630 953-9938

WEI Job No.: 7901-12-02
Client: TranSystems Corporation
Project: Pedestrian Bridge and Trail over IL 59
Location: Streamwood, IL

Datum: NAVD 88
Elevation: 773.60 ft
North: 1951301.99 ft
East: 1019454.49 ft
Station: 107+58.45
Offset: 5.27 RT

Elevation (ft)	SOIL AND ROCK DESCRIPTION	Depth (ft)	Sample Type / Recovery	Sample No.	SPT Values (blw/6 in)	Qu (tsf)	Moisture Content (%)
731.9	--rig chatter; possible cobbles--						
	Medium dense, gray GRAVELLY SAND; saturated --RDR 2-3--	45		15	2 5 6	NP	18
724.4	Soft to very stiff, gray SILTY CLAY LOAM, trace gravel; damp to moist --RDR 2--	50		16	10 13 17	NP	
		55		17	6 10 11	2.38 B	16
	--L_L(%)=23, P_I(%)=12-- --%Gravel=8.0-- --%Sand=11.8--	60		18	8 9 5	0.41 B	16
711.5	--%Silt=58.3-- --%Clay=21.8-- --A-6 (6)-- --rig chatter; possible cobbles--						
	Medium dense to dense, gray SANDY GRAVEL to GRAVEL; saturated --RDR 3-4--	65		19	10 13 10	NP	13
		70		20	18 13 23	NP	9
696.6	Boring terminated at 75.00 ft	75		21	13 14 15	NP	5
		80					

GENERAL NOTES

Begin Drilling: 05-07-2021 Complete Drilling: 05-07-2021
Drilling Contractor: Wang Testing Services Drill Rig: 17D50A [87%]
Driller: K&A Logger: M. Rojo Checked by: J. Bensen
Drilling Method: 2.25" ID HSA to 30', mud rotary thereafter; boring backfilled upon completion

WATER LEVEL DATA

While Drilling: 16.00 ft
At Completion of Drilling: MUD
Time After Drilling: NA
Depth to Water: NA

The stratification lines represent the approximate boundary between soil types; the actual transition may be gradual.

Wang Engineering

wangeng@wangeng.com
1145 N Main Street
Lombard, IL 60148
Telephone: 630 953-9928
Fax: 630 953-9938

BORING LOG TB-03

WEI Job No.: 7901-12-02

Client: TranSystems Corporation
Project: Pedestrian Bridge and Trail over IL 59
Location: Streamwood, IL

Datum: NAVD 88
Elevation: 774.90 ft
North: 1951386.20 ft
East: 1019891.04 ft
Station: 112+03.02
Offset: 0.20 RT

Elevation (ft)	SOIL AND ROCK DESCRIPTION	Depth (ft)	Sample Type / Recovery	Sample No.	SPT Values (blw/6 in)	Qu (tsf)	Moisture Content (%)
774.4	6-inch thick, black CLAY LOAM --TOPSOIL--						
	Stiff, gray SILTY CLAY LOAM, little gravel; damp --RDR 2--			1	2 4 5	1.00 P	13
771.9	Stiff to hard, gray SILTY CLAY, trace gravel; damp to wet --RDR 2--	5		2	3 5 7	3.85 B	19
	--wet spoon recovery--			3	8 9 11	5.58 B	17
		10		4	4 7 10	6.15 B	18
				5	3 6 6	2.30 B	17
	--L_L(%)=30, P_I(%)=13-- --%Gravel=2.4-- --%Sand=4.4-- --%Silt=56.7-- --%Clay=36.5-- --A-6 (14)--	15		6	2 5 6	2.71 B	19
				7	2 4 6	1.80 B	21
		20		8	3 5 6	1.07 B	17
749.4	Medium dense, gray SANDY GRAVEL to GRAVEL; wet --RDR 2-4--						
	--rig chatter; possible cobbles--						
736.2	Stiff, gray SILTY CLAY LOAM, trace gravel; damp to moist --RDR 2-3--						
		25		9			
				10	3 6 6	1.64 B	18
				11	4 4 8	NP	9
		30		12	9 6 9	NP	9
		35		13	7 8 9	NP	18
		40		14	4 7 11	1.07 B	17

GENERAL NOTES

Begin Drilling: 05-04-2021 Complete Drilling: 05-04-2021
Drilling Contractor: Wang Testing Services Drill Rig: 17D50A [87%]
Driller: K&A Logger: M. Rojo Checked by: J. Bensen
Drilling Method: 2.25" ID HSA to 10', mud rotary thereafter; boring backfilled upon completion

WATER LEVEL DATA

While Drilling: 6.00 ft
At Completion of Drilling: MUD
Time After Drilling: NA
Depth to Water: NA

The stratification lines represent the approximate boundary between soil types; the actual transition may be gradual.

WANGENGINC 7901203.GPJ WANGENG.GDT 8/26/21

Wang Engineering

wangeng@wangeng.com
1145 N Main Street
Lombard, IL 60148
Telephone: 630 953-9928
Fax: 630 953-9938

BORING LOG TB-03

WEI Job No.: 7901-12-02

Client: TranSystems Corporation
Project: Pedestrian Bridge and Trail over IL 59
Location: Streamwood, IL

Datum: NAVD 88
Elevation: 774.90 ft
North: 1951386.20 ft
East: 1019891.04 ft
Station: 112+03.02
Offset: 0.20 RT

Elevation (ft)	SOIL AND ROCK DESCRIPTION	Depth (ft)	Sample Type / Recovery	Sample No.	SPT Values (blw/6 in)	Qu (tsf)	Moisture Content (%)
733.2	Gray SANDY GRAVEL; saturated						
731.2	Medium dense to dense, gray, fine SAND; saturated --RDR 2--	45		15	11 15 18	NP	22
		50		16	8 10 10	NP	21
723.2	Medium dense, gray SILT to SILTY LOAM; wet --RDR 2--						
		55		17	6 7 9	2.00 P	23
	--L_L(%)=22, P_I(%)=14-- --%Gravel=0.0-- --%Sand=4.9--	60		18	10 8 9	2.00 P	21
	--%Silt=80.3-- --%Clay=14.8-- --A-4 (5)--						
		65		19	5 7 9	1.50 P	23
708.2	Very stiff, gray SILTY CLAY, trace gravel; damp to moist --RDR 2--						
		70		20	4 6 12	3.20 B	22
703.2	Medium dense, gray SANDY GRAVEL; saturated --RDR 2--						
699.9	Boring terminated at 75.00 ft	75		21	12 10 11	NP	17
		80					

GENERAL NOTES

Begin Drilling: 05-04-2021 Complete Drilling: 05-04-2021
Drilling Contractor: Wang Testing Services Drill Rig: 17D50A [87%]
Driller: K&A Logger: M. Rojo Checked by: J. Bensen
Drilling Method: 2.25" ID HSA to 10', mud rotary thereafter; boring backfilled upon completion

WATER LEVEL DATA

While Drilling: 6.00 ft
At Completion of Drilling: MUD
Time After Drilling: NA
Depth to Water: NA

The stratification lines represent the approximate boundary between soil types; the actual transition may be gradual.

WANGENGINC 7901203.GPJ WANGENG.GDT 8/26/21

Wang Engineering

wangeng@wangeng.com
1145 N Main Street
Lombard, IL 60148
Telephone: 630 953-9928
Fax: 630 953-9938

BORING LOG TB-04

WEI Job No.: 7901-12-02

Client: TranSystems Corporation
Project: Pedestrian Bridge and Trail over IL 59
Location: Streamwood, IL

Datum: NAVD 88
Elevation: 774.60 ft
North: 1951409.89 ft
East: 1019999.14 ft
Station: 113.13.61
Offset: 3.86 LT

Elevation (ft)	SOIL AND ROCK DESCRIPTION	Depth (ft)	Sample Type / Recovery	Sample No.	SPT Values (blw/6 in)	Qu (tsf)	Moisture Content (%)
774.0	7-inch thick, black CLAY LOAM --TOPSOIL--						
	Very soft to soft, black to gray, SILTY CLAY, organic matter; wet --RDR 2--			1	1 1 2	0.33 B	70
	--L_L(%)=34, P_I(%)=18-- --%Gravel=3.2-- --%Sand=9.7-- --%Silt=50.6-- --%Clay=36.4-- --A-6 (13)--	5		2	0 1 1	< 0.08 B	36
769.1	Medium dense, gray SANDY LOAM, trace gravel and cobble fragments; wet --RDR 2--			3	6 9 8	NP	33
766.6	Stiff to hard, gray SILTY CLAY, trace to little gravel; damp to moist --RDR 2-4--	10		4	6 6 6	4.18 B	18
				5	4 7 9	3.77 B	19
		15		6	4 8 7	3.28 B	19
				7	5 8 11	2.46 B	19
		20		8	4 8 10	1.89 B	19
	--rig chatter, 20.0 to 23.0 feet-- --possible cobbles--						
		25		9	7 6 10	2.79 B	15
				10	3 8 8	1.50 P	22
				11	4 6 10	1.50 P	24
		30		12	5 8 9	2.79 B	19
	--rig chatter; possible cobbles--						
737.9	Medium dense, gray SANDY GRAVEL; wet --RDR 3-4--						
		35		13	5 8 9	2.30 B	19
		40		14	5 8 10	NP	12

GENERAL NOTES

Begin Drilling: 05-03-2021 Complete Drilling: 05-03-2021
Drilling Contractor: Wang Testing Services Drill Rig: 17D50A [87%]
Driller: K&A Logger: M. Rojo Checked by: J. Bensen
Drilling Method: 2.25" ID HSA to 10', mud rotary thereafter; boring backfilled upon completion

WATER LEVEL DATA

While Drilling: 1.50 ft
At Completion of Drilling: MUD
Time After Drilling: NA
Depth to Water: NA

The stratification lines represent the approximate boundary between soil types; the actual transition may be gradual.

WANGENGINC 7901203.GPJ WANGENG.GDT 8/26/21

TRANSYSTEMS	USER NAME = lmnainggolan	DESIGNED - JE	REVISED -	STATE OF ILLINOIS DEPARTMENT OF TRANSPORTATION	SOIL BORING LOGS - 11 STRUCTURE NO. 016-8309	F.A.P. RTE.	SECTION	COUNTY	TOTAL SHEETS	SHEET NO.
		CHECKED - WJC	REVISED -			338	21-00067-00-BR	COOK	90	77
	PLOT SCALE = 0.1667 ' / in.	DRAWN - JE	REVISED -			CONTRACT NO. 61J67				
	PLOT DATE = 5/23/2023	CHECKED - WJC	REVISED -		SHEET 28 OF 29 SHEETS	ILLINOIS	FED. AID PROJECT			

5/23/2023 3:13:11 PM

Wang Engineering
wangeng@wangeng.com
1145 N Main Street
Lombard, IL 60148
Telephone: 630 953-9928
Fax: 630 953-9938

BORING LOG TB-04

WEI Job No.: 7901-12-02

Client: TranSystems Corporation
Project: Pedestrian Bridge and Trail over IL 59
Location: Streamwood, IL

Datum: NAVD 88
Elevation: 774.60 ft
North: 1951409.89 ft
East: 1019999.14 ft
Station: 113.13.61
Offset: 3.86 LT

Elevation (ft)	SOIL AND ROCK DESCRIPTION	Depth (ft)	Sample Type / Recovery	Sample No.	SPT Values (blws/6 in)	Qu (tsf)	Moisture Content (%)
732.9	Very stiff, gray SILTY CLAY LOAM, trace gravel; damp --RDR 3--	45		15	7 11 12	2.62 B	15
727.9	Very dense, gray, fine SAND, some gravel; saturated --RDR 3--	50		16	13 26 39	NP	12
722.9	Medium dense, gray SANDY GRAVEL; wet --RDR 2--	55		17	8 10 17	NP	7
717.9	Medium dense to dense, gray SILTY LOAM, trace gravel; wet --RDR 2-- --%Gravel=3.3-- --%Sand=29.1-- --%Silt=58.8--	60		18	6 16 16	NP	28
707.9	--%Clay=8.8-- --A-4 (0)--	65		19	10 19 8	NP	24
702.9	Medium stiff to stiff, gray SILTY CLAY, trace gravel; moist --RDR 2--	70		20	5 8 9	0.82 B	25
699.6	Boring terminated at 75.00 ft	75		21	4 10 14	1.23 B	22
		80					

GENERAL NOTES

Begin Drilling: 05-03-2021 Complete Drilling: 05-03-2021
Drilling Contractor: Wang Testing Services Drill Rig: 17D50A [87%]
Driller: K&A Logger: M. Rojo Checked by: J. Bensen
Drilling Method: 2.25" ID HSA to 10', mud rotary thereafter; boring backfilled upon completion

WATER LEVEL DATA

While Drilling: 1.50 ft
At Completion of Drilling: MUD
Time After Drilling: NA
Depth to Water: NA

The stratification lines represent the approximate boundary between soil types; the actual transition may be gradual.

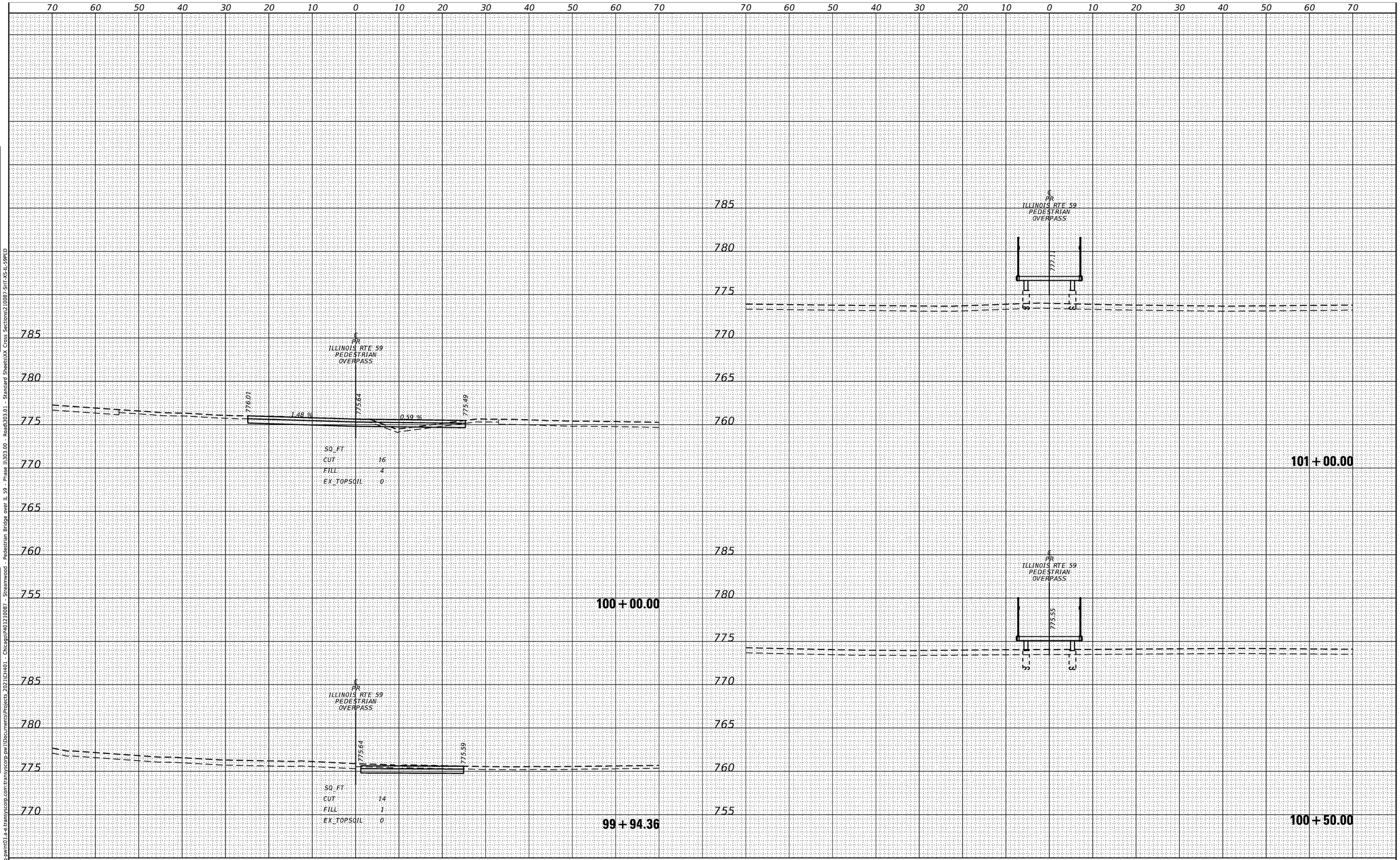

FINAL SURVEY		BY	DATE
	SURVEYED		
	PLOTTED		
	TEMPLATE		
NOTE BOOK	AREAS		
NO.	AREAS CHECKED		

ORIGINAL SURVEY		BY	DATE
	SURVEYED		
	PLOTTED		
	TEMPLATE		
NOTE BOOK	AREAS		
NO.	AREAS CHECKED		

MODEL: Default
FILE NAME: pw:\\hq-pwin01.a-e.transyscorp.com:transyscorp-pw\Documents\Projects_2021\CH401 - Chicago\P401210087 - Streamwood - Pedestrian Bridge over IL 59 - Phase II\303.00 - Roadway\303.01 - Standard Sheets\XX Cross Sections\210087-SHT-XS-IL-59-PED

TRANSYSTEMS

USER NAME = lmnainggolan	DESIGNED -	REVISED -	
	DRAWN -	REVISED -	
PLOT SCALE = 20.0000 ' / in.	CHECKED -	REVISED -	
PLOT DATE = 5/23/2023	DATE -	REVISED -	

STATE OF ILLINOIS
DEPARTMENT OF TRANSPORTATION

IL 59 – PEDESTRIAN OVERPASS
CROSS SECTIONS

SCALE: 10H:5V | SHEET 1 OF 12 SHEETS | STA. 99+94.36 TO STA. 101+00.00

F.A.U. RTE.	SECTION	COUNTY	TOTAL SHEETS	SHEET NO.
87	21-00067-00-BR	COOK	90	79
		CONTRACT NO. 61J67		
		ILLINOIS	FED. AID PROJECT	

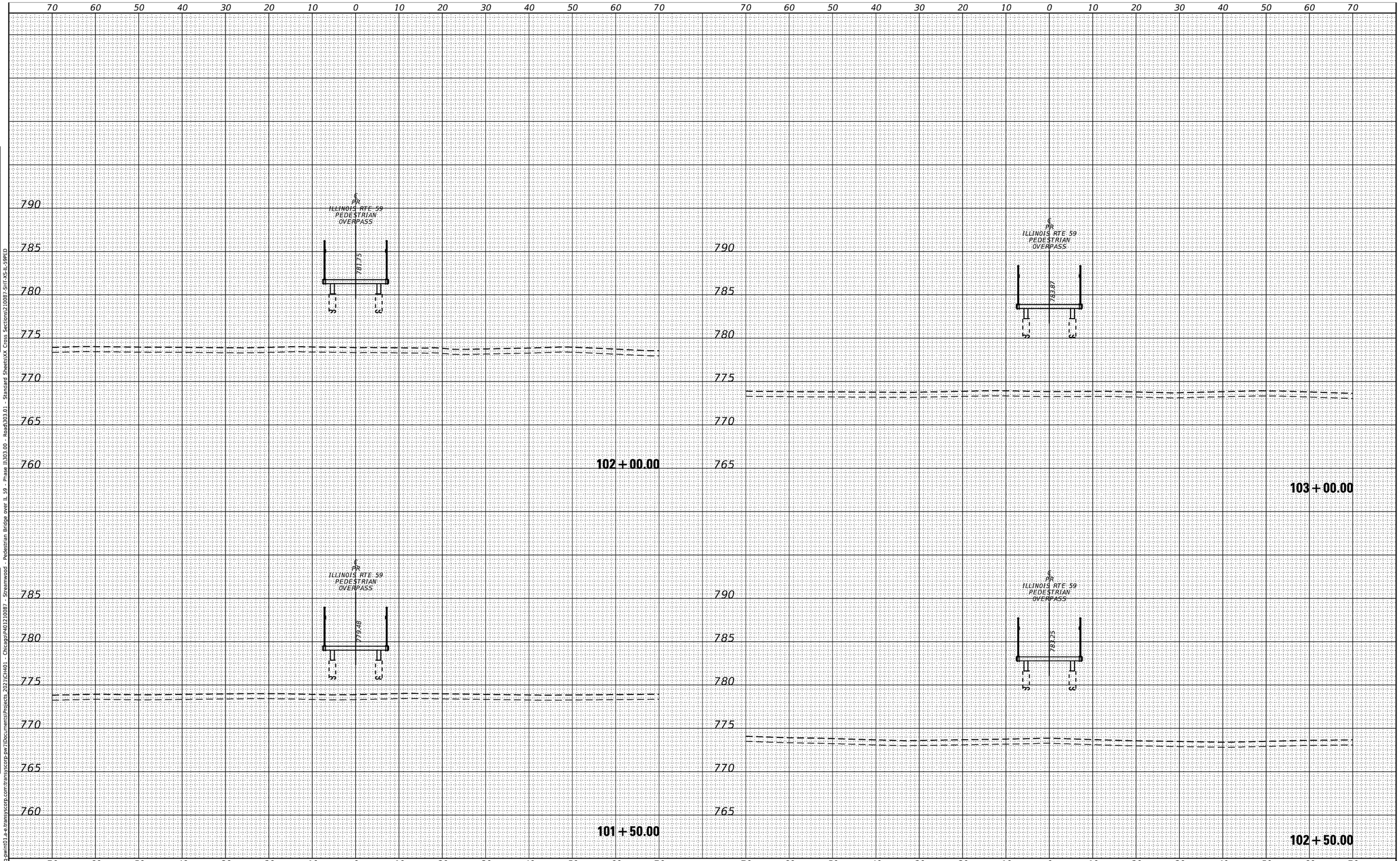

FINAL SURVEY		BY	DATE
NOTE BOOK	SURVEYED		
	PLOTTED		
	TEMPLATE		
	AREAS		
NO.	AREAS CHECKED		

ORIGINAL SURVEY		BY	DATE
NOTE BOOK	SURVEYED		
	PLOTTED		
	TEMPLATE		
	AREAS		
NO.	AREAS CHECKED		

MODEL: Default
FILE NAME: pw:\\tq-pwim01.a-e.transyscorp.com:transyscorp-pw1\Documents\Projects_2021\CH401 - Chicago\P401210087 - Streamwood - Pedestrian Bridge over IL 59 - Phase II\303.00 - Road\303.01 - Standard Sheets\XX Cross Sections\210087-SHT-XS-IL-59PED

TRANSYSTEMS

USER NAME = lmnainggolan	DESIGNED -	REVISED -	
	DRAWN -	REVISED -	
PLOT SCALE = 20.0000 ' / in.	CHECKED -	REVISED -	
PLOT DATE = 5/23/2023	DATE -	REVISED -	

STATE OF ILLINOIS
DEPARTMENT OF TRANSPORTATION

IL 59 – PEDESTRIAN OVERPASS
CROSS SECTIONS

SCALE: 10H:5V | SHEET 2 OF 12 SHEETS | STA. 101+50.00 TO STA. 103+00.00

F.A.U. RTE.	SECTION	COUNTY	TOTAL SHEETS	SHEET NO.
87	21-00067-00-BR	COOK	90	80

CONTRACT NO. 61J67

ILLINOIS | FED. AID PROJECT

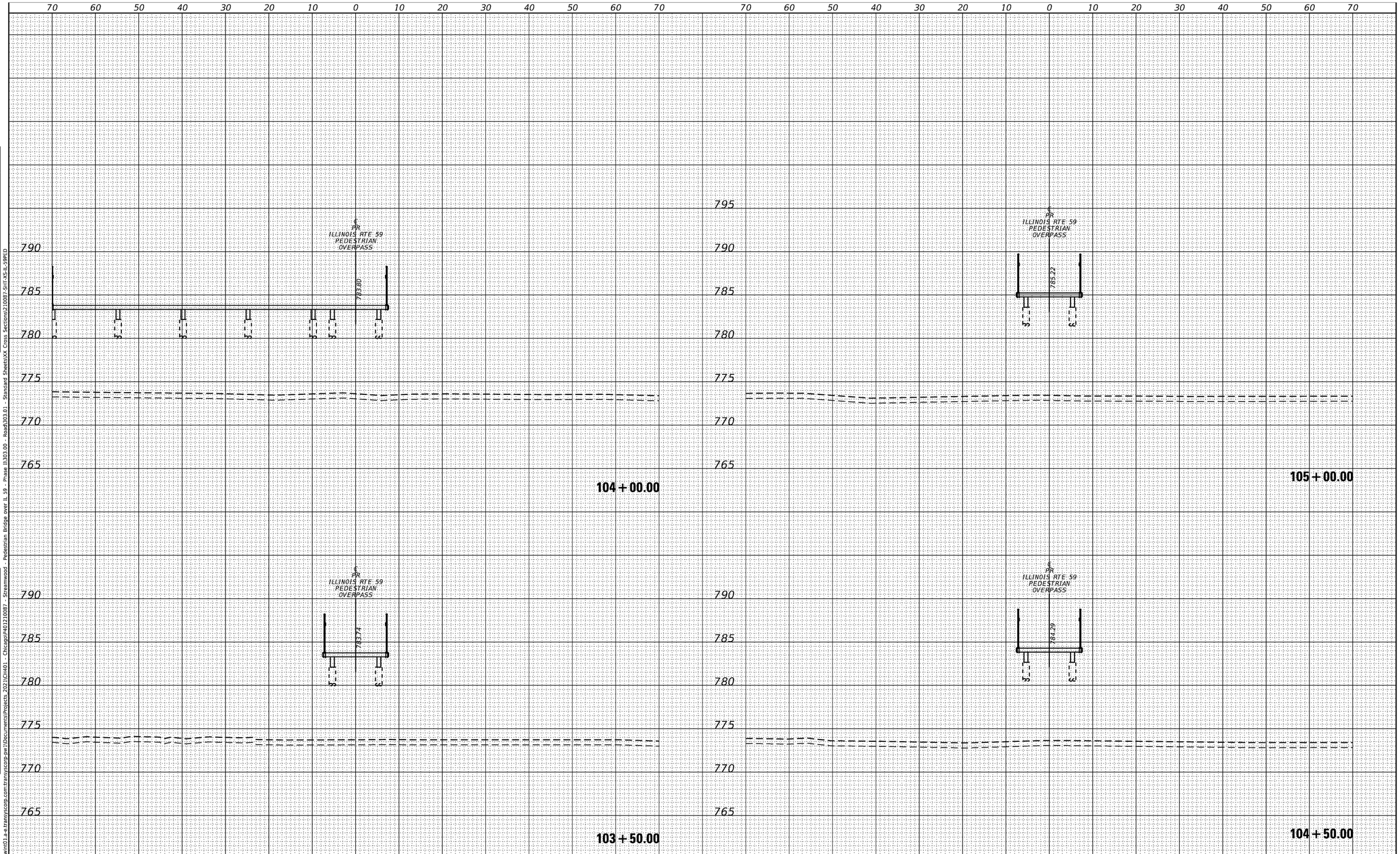

FINAL SURVEY		BY	DATE
NOTE BOOK	SURVEYED		
	PLOTTED		
	TEMPLATE		
	AREAS		
NO.	AREAS CHECKED		

ORIGINAL SURVEY		BY	DATE
NOTE BOOK	SURVEYED		
	PLOTTED		
	TEMPLATE		
	AREAS		
NO.	AREAS CHECKED		

MODEL: Default
FILE NAME: pw:\\hq-pwint01.a-e.transyscorp.com:transyscorp-pw1\Documents\Projects_2021\CH401 - Chicago\P401210087 - Streamwood - Pedestrian Bridge over IL 59 - Phase II\303.00 - Road\303.01 - Standard Sheets\XX Cross Sections\210087-SHT-XS-IL-59PED

TRANSYSTEMS

USER NAME = lmnainggolan	DESIGNED -	REVISED -	
	DRAWN .	REVISED -	
PLOT SCALE = 20.0000 ' / in.	CHECKED -	REVISED -	
PLOT DATE = 5/23/2023	DATE -	REVISED -	

STATE OF ILLINOIS
DEPARTMENT OF TRANSPORTATION

IL 59 – PEDESTRIAN OVERPASS
CROSS SECTIONS

SCALE: 10H:5V | SHEET 3 OF 12 SHEETS | STA. 103+50.00 TO STA. 105+00.00

F.A.U. RTE.	SECTION	COUNTY	TOTAL SHEETS	SHEET NO.
87	21-00067-00-BR	COOK	90	81

CONTRACT NO. 61J67

ILLINOIS | FED. AID PROJECT

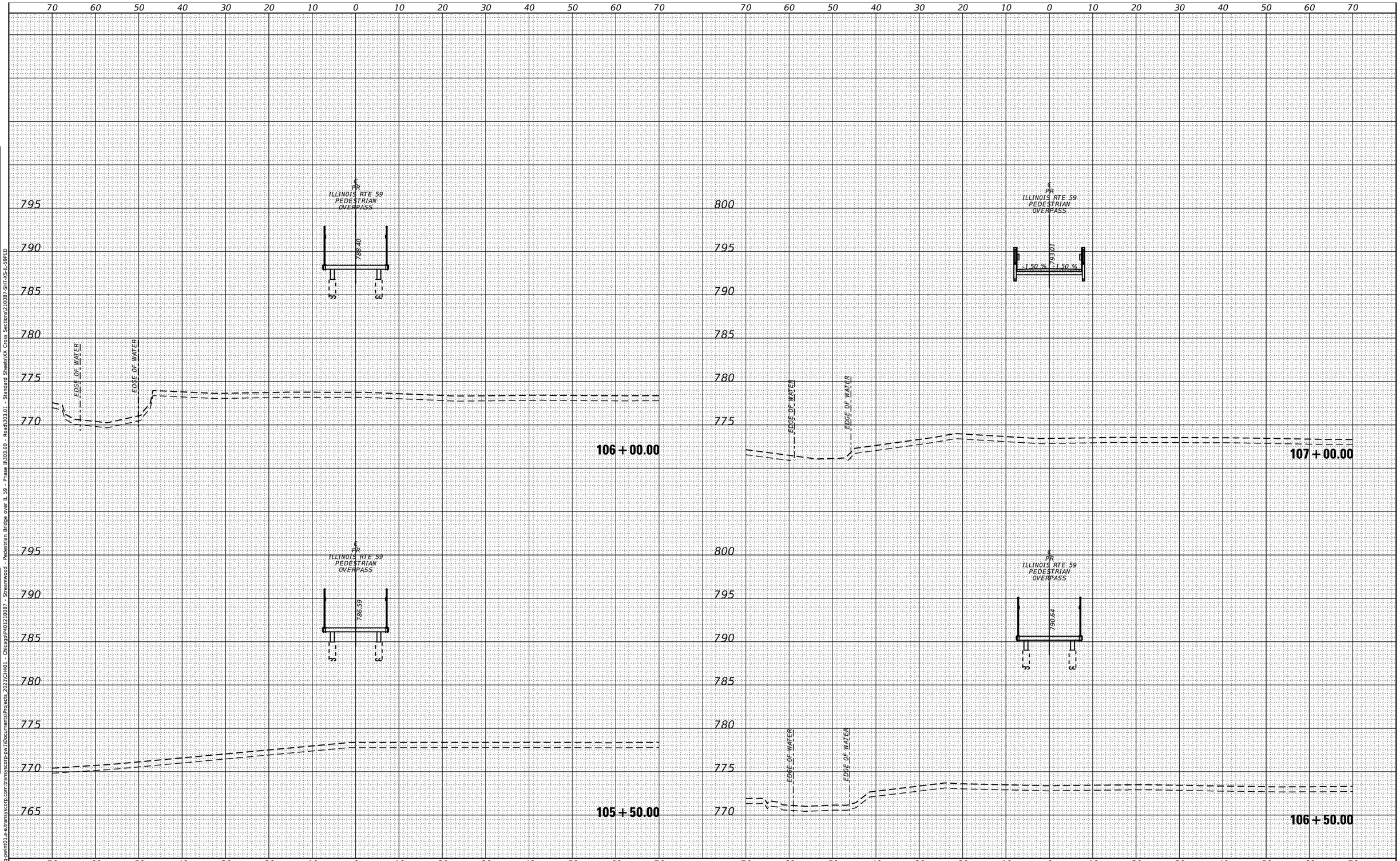

FINAL SURVEY		BY	DATE
NOTE BOOK	SURVEYED		
	PLOTTED		
	TEMPLATE		
	AREAS		
NO.	AREAS CHECKED		

ORIGINAL SURVEY		BY	DATE
NOTE BOOK	SURVEYED		
	PLOTTED		
	TEMPLATE		
	AREAS		
NO.	AREAS CHECKED		

MODEL: Default
FILE NAME: pw:\\hq-pwint01.a-e.transyscorp.com:transyscorp-pw1\Documents\Projects_2021\CH401 - Chicago\P401210087 - Streamwood - Pedestrian Bridge over IL 59 - Phase II\303.00 - Road\303.01 - Standard Sheets\XX Cross Sections\210087-SHT-XS-IL-59PED

TRANSYSTEMS

USER NAME = lmnainggolan	DESIGNED -	REVISED -	
	DRAWN -	REVISED -	
PLOT SCALE = 20.0000 ' / in.	CHECKED -	REVISED -	
PLOT DATE = 5/23/2023	DATE -	REVISED -	

STATE OF ILLINOIS
DEPARTMENT OF TRANSPORTATION

IL 59 – PEDESTRIAN OVERPASS
CROSS SECTIONS

SCALE: 10H:5V | SHEET 4 OF 12 SHEETS | STA. 105+50.00 TO STA. 107+00.00

F.A.U. RTE.	SECTION	COUNTY	TOTAL SHEETS	SHEET NO.
87	21-00067-00-BR	COOK	90	82

CONTRACT NO. 61J67

ILLINOIS | FED. AID PROJECT

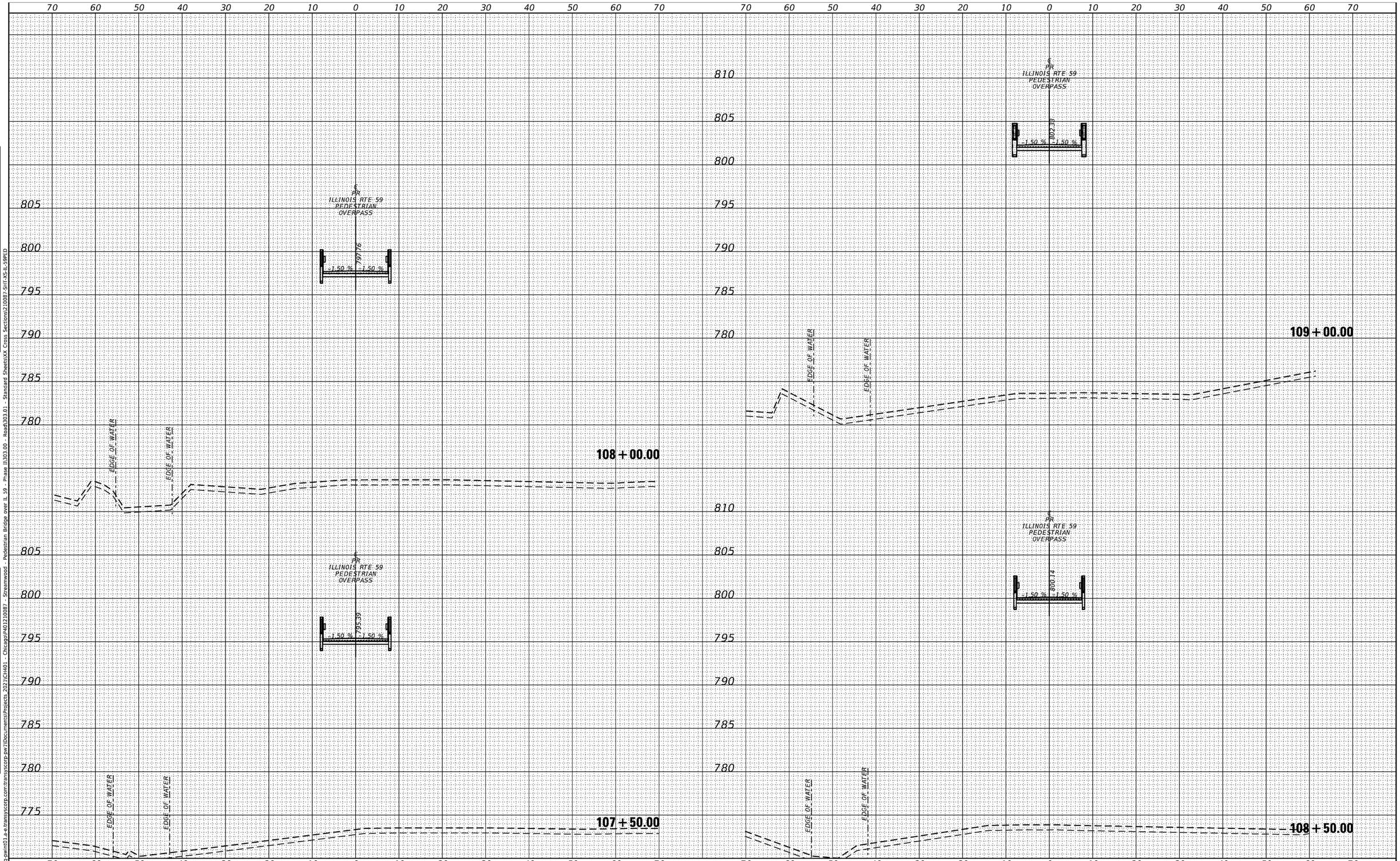

FINAL SURVEY		BY	DATE
	SURVEYED		
	PLOTTED		
	TEMPLATE		
NOTE BOOK	AREAS		
	AREAS CHECKED		
NO.			

ORIGINAL SURVEY		BY	DATE
	SURVEYED		
	PLOTTED		
	TEMPLATE		
NOTE BOOK	AREAS		
	AREAS CHECKED		
NO.			

MODEL: Default
FILE NAME: pw:\\hq-pwint01.a-e.transyscorp.com:transyscorp-pw1\Documents\Projects_2021\CH401 - Chicago\P401210087 - Streamwood - Pedestrian Bridge over IL 59 - Phase II\303.00 - Road\303.01 - Standard Sheets\XX Cross Sections\210087-SHT-XS-IL-59PED

TRANSYSTEMS

USER NAME = lmnainggolan	DESIGNED -	REVISED -	
	DRAWN -	REVISED -	
PLOT SCALE = 20.0000 ' / in.	CHECKED -	REVISED -	
PLOT DATE = 5/23/2023	DATE -	REVISED -	

STATE OF ILLINOIS
DEPARTMENT OF TRANSPORTATION

IL 59 – PEDESTRIAN OVERPASS
CROSS SECTIONS

SCALE: 10H:5V | SHEET 5 OF 12 SHEETS | STA. 107+50.00 TO STA. 109+00.00

F.A.U. RTE.	SECTION	COUNTY	TOTAL SHEETS	SHEET NO.
87	21-00067-00-BR	COOK	90	83

CONTRACT NO. 61J67

ILLINOIS FED. AID PROJECT

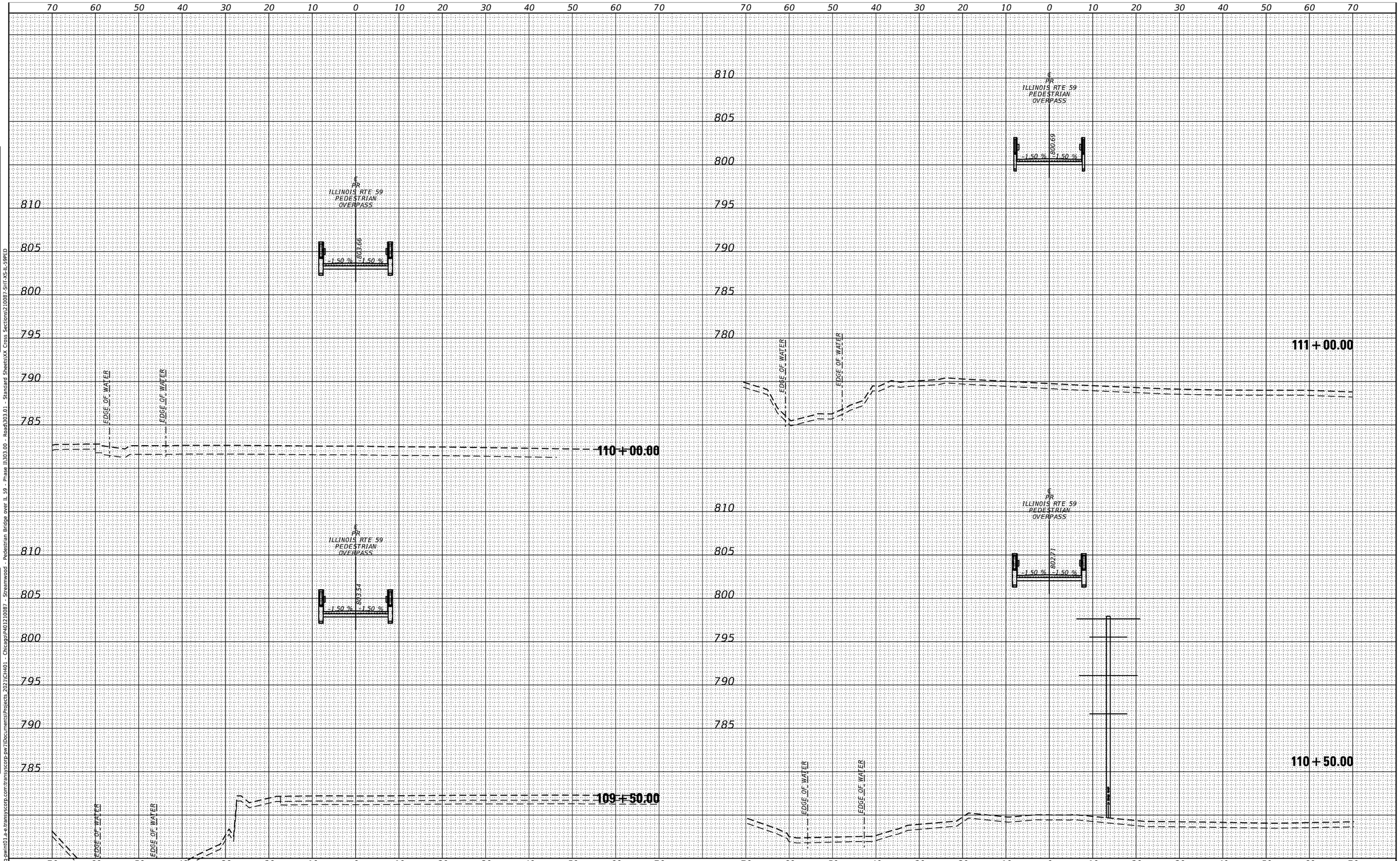

FINAL SURVEY		BY	DATE
NOTE BOOK	SURVEYED		
	PLOTTED		
	TEMPLATE		
	AREAS		
NO.	AREAS CHECKED		

ORIGINAL SURVEY		BY	DATE
NOTE BOOK	SURVEYED		
	PLOTTED		
	TEMPLATE		
	AREAS		
NO.	AREAS CHECKED		

MODEL: Default
FILE NAME: pw:\\hq-pwint01.a-e.transyscorp.com:transyscorp-pw1\Documents\Projects_2021\CH401 - Chicago\P401210087 - Streamwood - Pedestrian Bridge over IL 59 - Phase II\303.00 - Road\303.01 - Standard Sheets\XX Cross Sections\210087-SHT-XS-IL-59PED

TRANSYSTEMS

USER NAME = lmnainggolan	DESIGNED -	REVISED -	
	DRAWN -	REVISED -	
PLOT SCALE = 20.0000 ' / in.	CHECKED -	REVISED -	
PLOT DATE = 5/23/2023	DATE -	REVISED -	

STATE OF ILLINOIS
DEPARTMENT OF TRANSPORTATION

IL 59 – PEDESTRIAN OVERPASS
CROSS SECTIONS

SCALE: 10H:5V | SHEET 6 OF 12 SHEETS | STA. 109+50.00 TO STA. 111+00.00

F.A.U. RTE.	SECTION	COUNTY	TOTAL SHEETS	SHEET NO.
87	21-00067-00-BR	COOK	90	84

CONTRACT NO. 61J67

ILLINOIS | FED. AID PROJECT

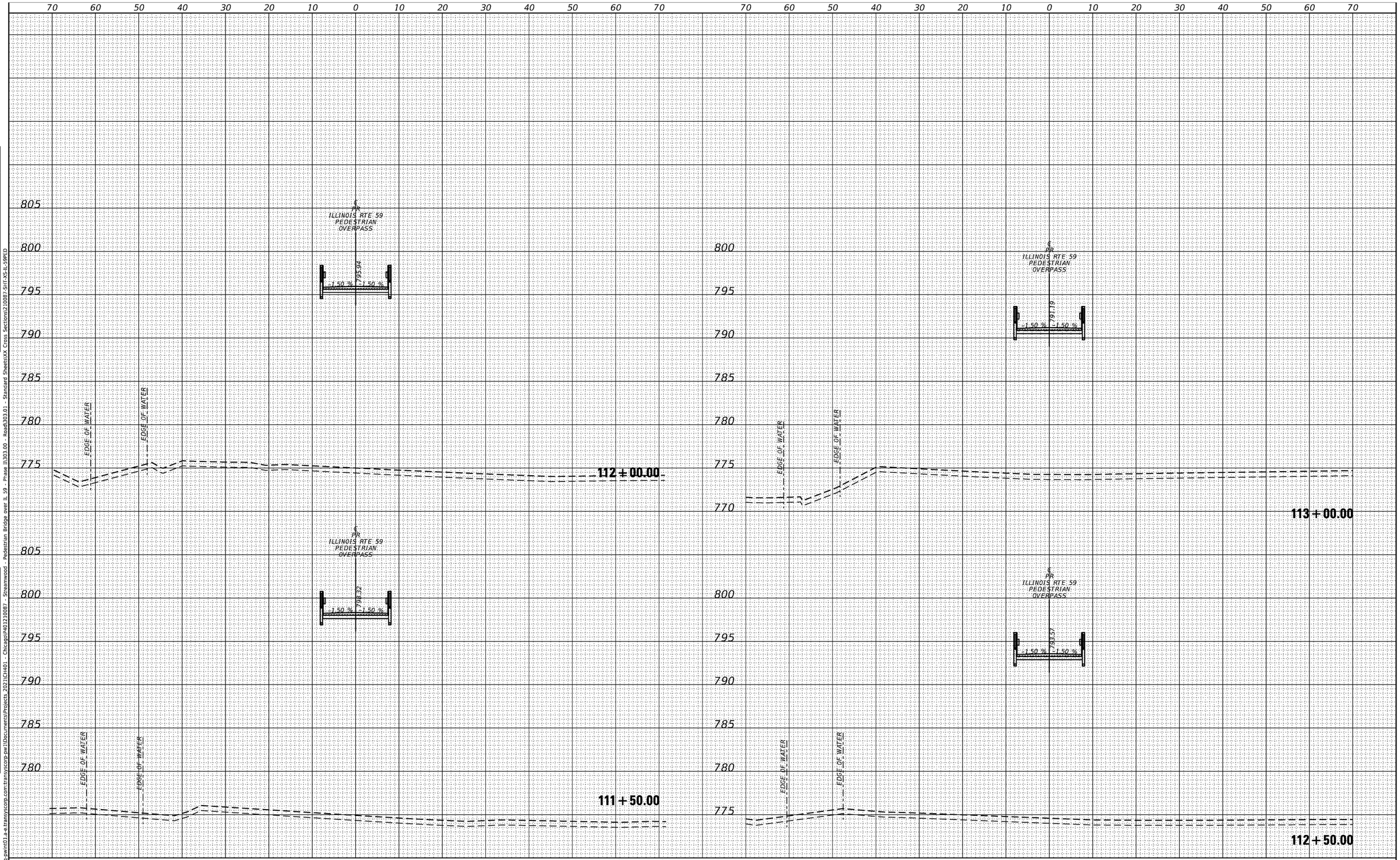

FINAL SURVEY	BY	DATE
SURVEYED		
PLOTTED		
TEMPLATE		
AREAS		
AREAS CHECKED		
NOTE BOOK		
NO.		

ORIGINAL SURVEY	BY	DATE
SURVEYED		
PLOTTED		
TEMPLATE		
AREAS		
AREAS CHECKED		
NOTE BOOK		
NO.		

MODEL: Default
FILE NAME: pw:\\hq-pwin01.a-e.transyscorp.com:transyscorp-pw\1Documents\Projects_2021\CH401 - Chicago\P401210087 - Streamwood - Pedestrian Bridge over IL 59 - Phase II\303.00 - Road\303.01 - Standard Sheets\XX Cross Sections\210087-SHT-XS-IL-59PED

TRANSYSTEMS

USER NAME = lmnainggolan	DESIGNED -	REVISED -
	DRAWN -	REVISED -
PLOT SCALE = 20.0000 ' / in.	CHECKED -	REVISED -
PLOT DATE = 5/23/2023	DATE -	REVISED -

STATE OF ILLINOIS
DEPARTMENT OF TRANSPORTATION

IL 59 – PEDESTRIAN OVERPASS
CROSS SECTIONS

SCALE: 10H:5V | SHEET 7 OF 12 SHEETS | STA. 111+50.00 TO STA. 113+00.00

F.A.U. RTE.	SECTION	COUNTY	TOTAL SHEETS	SHEET NO.
87	21-00067-00-BR	COOK	90	85

CONTRACT NO. 61J67

ILLINOIS | FED. AID PROJECT

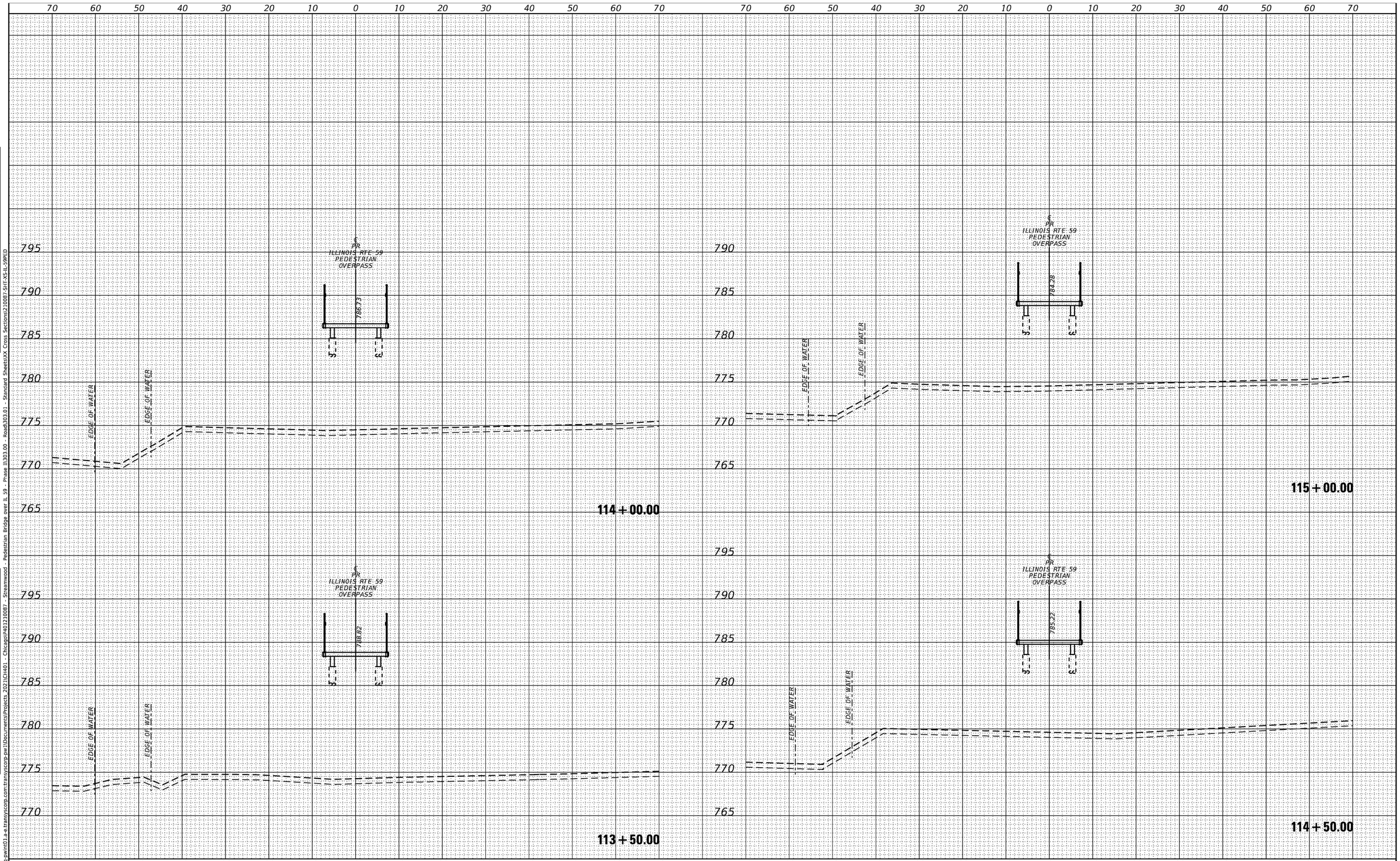

FINAL SURVEY		BY	DATE
NOTE BOOK	SURVEYED		
	PLOTTED		
	TEMPLATE		
	AREAS		
NO.	AREAS CHECKED		

ORIGINAL SURVEY		BY	DATE
NOTE BOOK	SURVEYED		
	PLOTTED		
	TEMPLATE		
	AREAS		
NO.	AREAS CHECKED		

MODEL: Default
FILE NAME: pw:\\hq-pwin01.a-e.transyscorp.com:transyscorp-pw\Documents\Projects_2021\CH401 - Chicago\P401210087 - Streamwood - Pedestrian Bridge over IL 59 - Phase II\303.00 - Road\303.01 - Standard Sheets\XX Cross Sections\210087-SHT-XS-IL-59PED

TRANSYSTEMS

USER NAME = lmnainggolan	DESIGNED -	REVISED -	
	DRAWN -	REVISED -	
PLOT SCALE = 20.0000 ' / in.	CHECKED -	REVISED -	
PLOT DATE = 5/23/2023	DATE -	REVISED -	

STATE OF ILLINOIS
DEPARTMENT OF TRANSPORTATION

IL 59 – PEDESTRIAN OVERPASS
CROSS SECTIONS

SCALE: 10H:5V | SHEET 8 OF 12 SHEETS | STA. 113+50.00 TO STA. 115+00.00

F.A.U. RTE.	SECTION	COUNTY	TOTAL SHEETS	SHEET NO.
87	21-00067-00-BR	COOK	90	86
		CONTRACT NO. 61J67		
		ILLINOIS	FED. AID PROJECT	

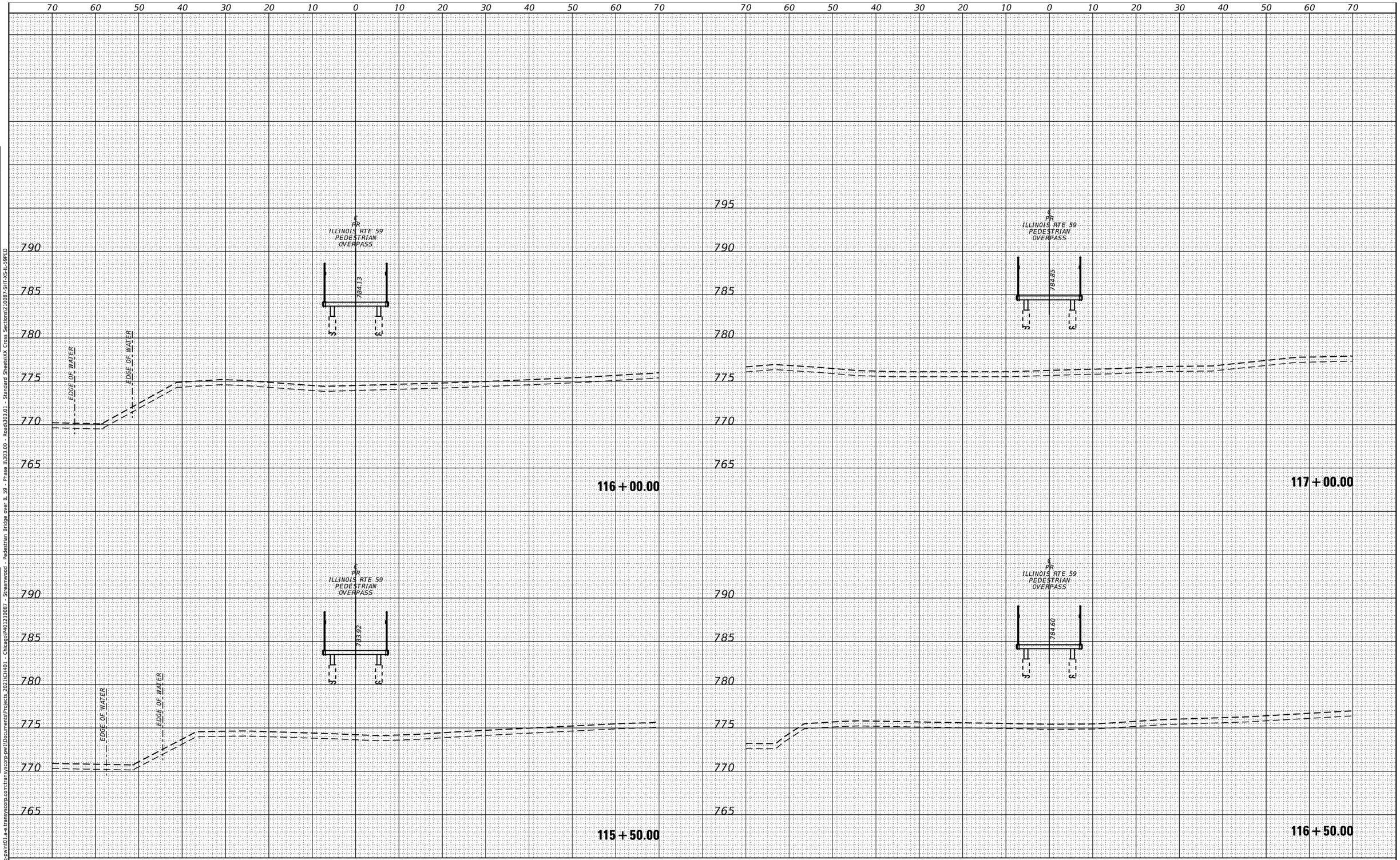

FINAL SURVEY		BY	DATE
NOTE BOOK	SURVEYED		
	PLOTTED		
	TEMPLATE		
	AREAS		
NO.	AREAS CHECKED		

ORIGINAL SURVEY		BY	DATE
NOTE BOOK	SURVEYED		
	PLOTTED		
	TEMPLATE		
	AREAS		
NO.	AREAS CHECKED		

MODEL: Default
FILE NAME: pw:\\hq-pwin01.a-e.transyscorp.com:transyscorp-pw\Documents\Projects_2021\CH401 - Chicago\P401210087 - Streamwood - Pedestrian Bridge over IL 59 - Phase II\303.00 - Roadway\303.01 - Standard Sheets\XX Cross Sections\210087-SHT-XS-IL-59-PED

TRANSYSTEMS

USER NAME = lmnainggolan	DESIGNED -	REVISED -	
	DRAWN -	REVISED -	
PLOT SCALE = 20.0000 ' / in.	CHECKED -	REVISED -	
PLOT DATE = 5/23/2023	DATE -	REVISED -	

STATE OF ILLINOIS
DEPARTMENT OF TRANSPORTATION

IL 59 – PEDESTRIAN OVERPASS
CROSS SECTIONS

SCALE: 10H:5V | SHEET 9 OF 12 SHEETS | STA. 115+50.00 TO STA. 117+00.00

F.A.U. RTE.	SECTION	COUNTY	TOTAL SHEETS	SHEET NO.
87	21-00067-00-BR	COOK	90	87
		CONTRACT NO. 61J67		
		ILLINOIS	FED. AID PROJECT	

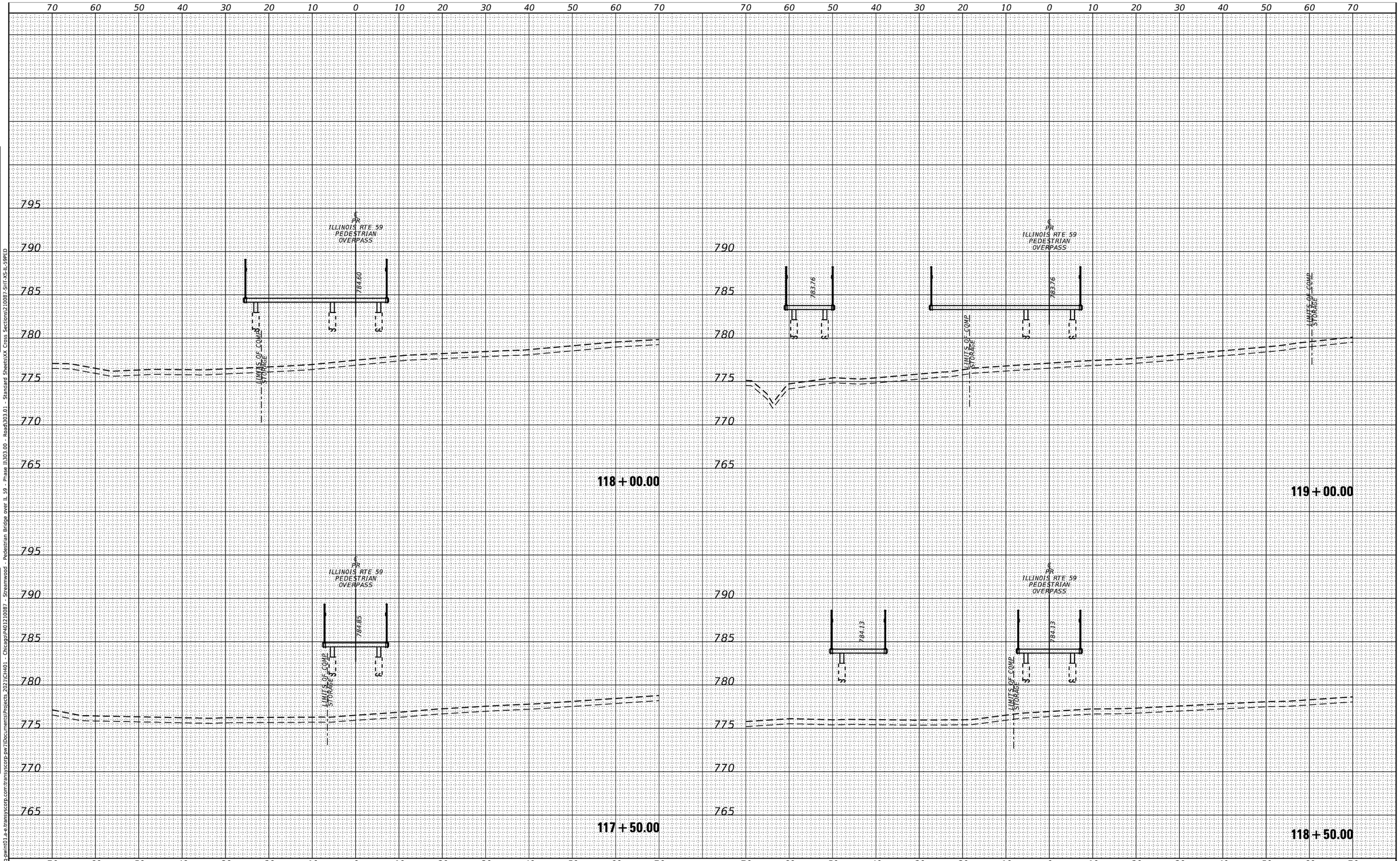

FINAL SURVEY		DT	DATE
	SURVEYED		
	PLOTTED		
	TEMPLATE		
NOTE BOOK	AREAS		
NO.	AREAS CHECKED		

ORIGINAL SURVEY		DT	DATE
	SURVEYED		
	PLOTTED		
	TEMPLATE		
NOTE BOOK	AREAS		
NO.	AREAS CHECKED		

MODEL: Default
FILE NAME: pw:\\tq-pwim01.a-e.transyscorp.com:transyscorp-pw1\Documents\Projects_2021\CH401 - Chicago\P401210087 - Streamwood - Pedestrian Bridge over IL 59 - Phase I\303.00 - Road\303.01 - Standard Sheets\XX Cross Sections\210087-SHT-XS-IL-59PED

TRANSYSTEMS

USER NAME = lmnainggolan	DESIGNED -	REVISED -	
	DRAWN -	REVISED -	
PLOT SCALE = 20.0000 ' / in.	CHECKED -	REVISED -	
PLOT DATE = 5/23/2023	DATE -	REVISED -	

STATE OF ILLINOIS
DEPARTMENT OF TRANSPORTATION

IL 59 – PEDESTRIAN OVERPASS
CROSS SECTIONS

SCALE: 10H:5V | SHEET 10 OF 12 SHEETS | STA. 117+50.00 TO STA. 119+00.00

F.A.U. RTE.	SECTION	COUNTY	TOTAL SHEETS	SHEET NO.
87	21-00067-00-BR	COOK	90	88

CONTRACT NO. 61J67

ILLINOIS FED. AID PROJECT

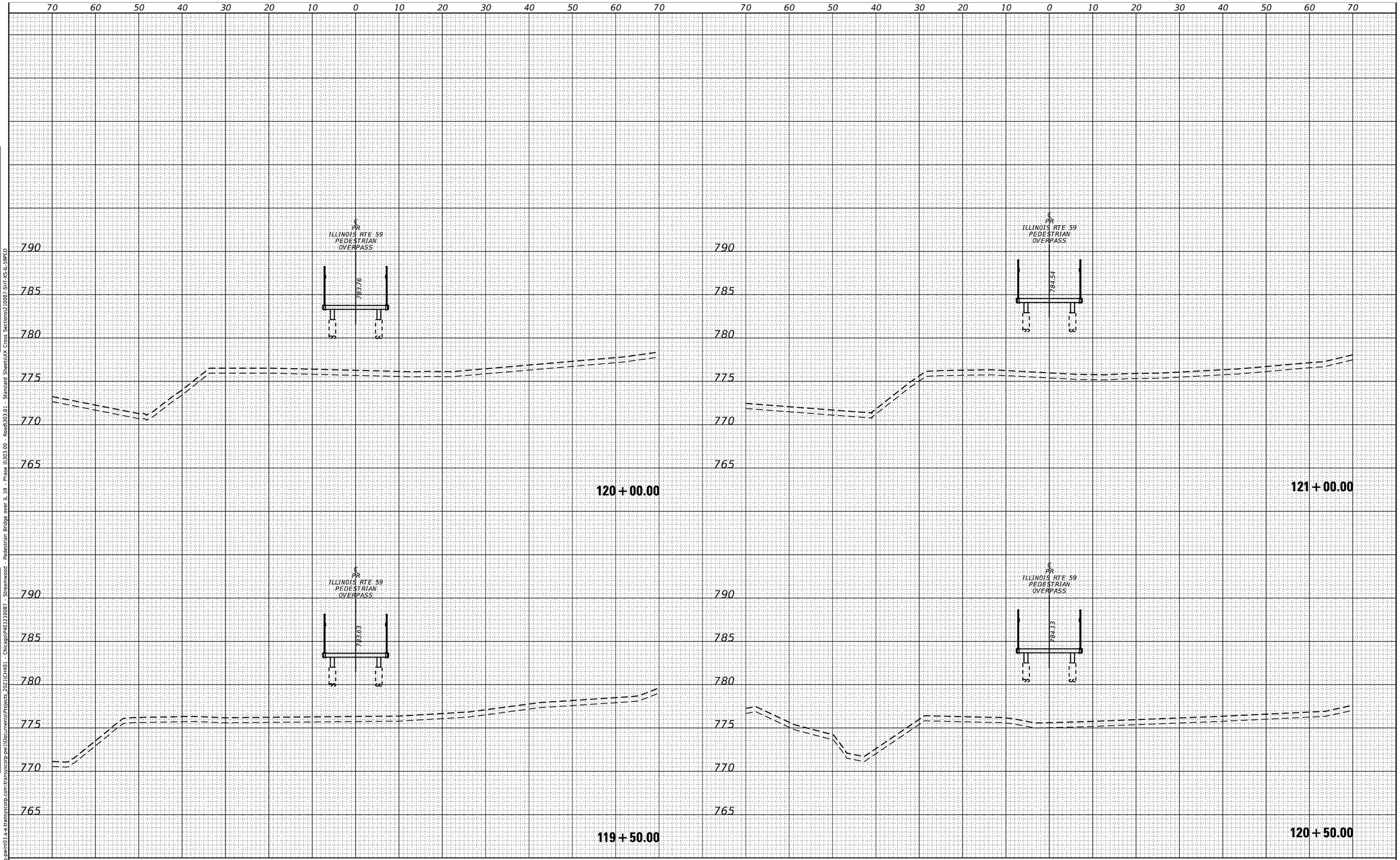

FINAL SURVEY			
NOTE BOOK	SURVEYED	BY	DATE
	PLOTTED		
	TEMPLATE		
	AREAS		
NO.	AREAS CHECKED		

ORIGINAL SURVEY			
NOTE BOOK	SURVEYED	BY	DATE
	PLOTTED		
	TEMPLATE		
	AREAS		
NO.	AREAS CHECKED		

MODEL: Default
FILE NAME: pw:\\hq-pwint01.a-e.transyscorp.com:transyscorp-pw1\Documents\Projects_2021\CH401 - Chicago\P401210087 - Streamwood - Pedestrian Bridge over IL 59 - Phase II\303.00 - Road\303.01 - Standard Sheets\XX Cross Sections\210087-SHT-XS-IL-59PED

TRANSYSTEMS

USER NAME = lmnainggolan	DESIGNED -	REVISED -
	DRAWN -	REVISED -
PLOT SCALE = 20.0000 ' / in.	CHECKED -	REVISED -
PLOT DATE = 5/23/2023	DATE -	REVISED -

STATE OF ILLINOIS
DEPARTMENT OF TRANSPORTATION

IL 59 – PEDESTRIAN OVERPASS
CROSS SECTIONS

SCALE: 10H:5V | SHEET 11 OF 12 SHEETS | STA. 119+50.00 TO STA. 121+00.00

F.A.U. RTE.	SECTION	COUNTY	TOTAL SHEETS	SHEET NO.
87	21-00067-00-BR	COOK	90	89

CONTRACT NO. 61J67

ILLINOIS | FED. AID PROJECT

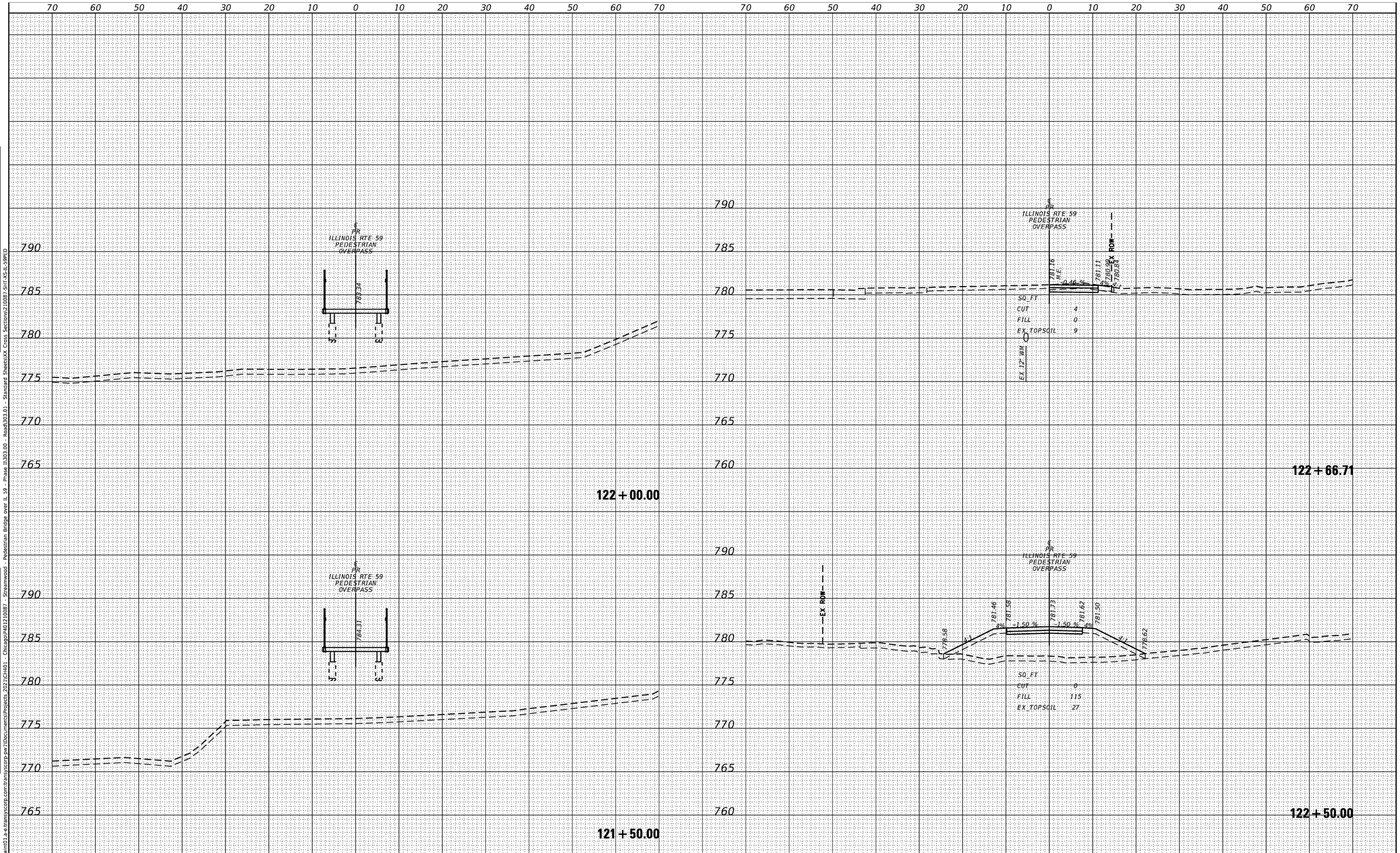

FINAL SURVEY		DT	DATE
NOTE BOOK	SURVEYED		
	PLOTTED		
	TEMPLATE		
NO.	AREAS		
	AREAS CHECKED		

ORIGINAL SURVEY		DT	DATE
NOTE BOOK	SURVEYED		
	PLOTTED		
	TEMPLATE		
NO.	AREAS		
	AREAS CHECKED		

MODEL: Default
FILE NAME: pw:\\hq-pwint01.a-e.transyscorp.com:transyscorp-pw1\Documents\Projects_2021\CH401 - Chicago\P401210087 - Streamwood - Pedestrian Bridge over IL 59 - Phase II\303.00 - Road\303.01 - Standard Sheets\XX Cross Sections\210087-Sht-XS-IL-59-PED

TRANSYSTEMS

USER NAME = lmnainggolan	DESIGNED -	REVISED -
	DRAWN -	REVISED -
PLOT SCALE = 20.0000 ' / in.	CHECKED -	REVISED -
PLOT DATE = 5/23/2023	DATE -	REVISED -

STATE OF ILLINOIS
DEPARTMENT OF TRANSPORTATION

IL 59 – PEDESTRIAN OVERPASS
CROSS SECTIONS

SCALE: 10H:5V | SHEET 12 OF 12 SHEETS | STA. 121+50.00 TO STA. 122+66.71

F.A.U. RTE.	SECTION	COUNTY	TOTAL SHEETS	SHEET NO.
87	21-00067-00-BR	COOK	90	90

CONTRACT NO. 61J67

ILLINOIS | FED. AID PROJECT