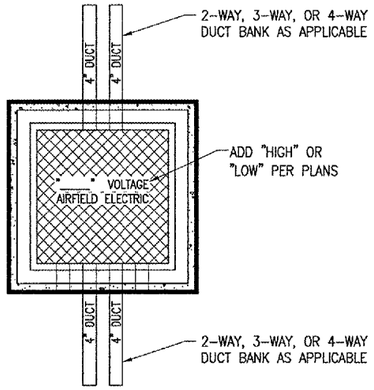

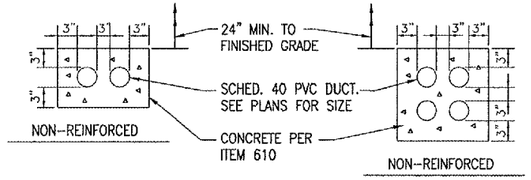

NOTES:

1. ALL DIMENSIONS ARE MINIMUM.
2. INCLUDE DUCT SPACERS AS MANUFACTURED BY UNDERGROUND DEVICES INC., TO MAINTAIN PROPER SEPARATION OF CONDUITS.

CONCRETE ENCASED DUCT DETAIL

(2-WAY & 4-WAY SHOWN)

NOTES:

1. THE COST OF ALL TURF AND PAVEMENT DUCT MARKERS SHALL BE INCIDENTAL TO THE DUCT. THE COST OF ALL CABLE MARKERS SHALL BE INCIDENTAL TO THE CABLE.
2. BITUMINOUS PAVEMENT DUCT MARKER AND CONCRETE DUCT MARKER TO BE PROVIDED AT EACH END OF EACH DUCT AS SHOWN ON THE LOCATION PLAN. FOR CONCRETE PAVEMENT, THE LETTER "D" SHALL BE IMPRESSED IN THE PAVEMENT INSTEAD OF THE MARKER. THE LETTER SHALL BE IMFORMED AS DESCRIBED IN NOTE 4.
3. CABLE MARKERS SHALL BE PLACED AT CHANGES OF DIRECTION AND APPROXIMATELY EVERY 200' ALONG CABLE RUNS.
4. CONCRETE CABLE MARKERS AND DUCT MARKERS SHALL HAVE LETTERS 4" HIGH, 3" WIDE WITH WIDTH OF STROKE ½" AND ¼" DEEP. ALL LETTERS, NUMBERS AND ARROWS TO BE IMPRESSED.

THE LOCATION OF UNDERGROUND UTILITIES AS INDICATED ON THE PLANS HAS BEEN OBTAINED FROM EXISTING RECORDS. NEITHER THE OWNER NOR THE ENGINEER ASSUMES ANY RESPONSIBILITY WHATSOEVER, IN RESPECT TO THE ACCURACY OR SUFFICIENCY OF THE INFORMATION AND THERE IS NO GUARANTEE, EITHER EXPRESSED OR IMPLIED, THAT THE CONDITIONS ARE REPRESENTATIVE OF THOSE TO BE ENCOUNTERED IN THE CONSTRUCTION.

NOTES:

1. LIDS FOR LOW VOLTAGE HANDHOLES SHALL BE LABELED "LOW VOLTAGE AIRFIELD ELECTRIC". LIDS FOR HIGH VOLTAGE HANDHOLES SHALL BE LABELED "HIGH VOLTAGE AIRFIELD ELECTRIC". COORDINATE LETTERING WITH MFR.
2. HANDHOLE MAY BE CAST IN PLACE OR PRECAST.
3. SEE SPECAIL PROVISIONS.

ELECTRICAL HANDHOLE DETAIL

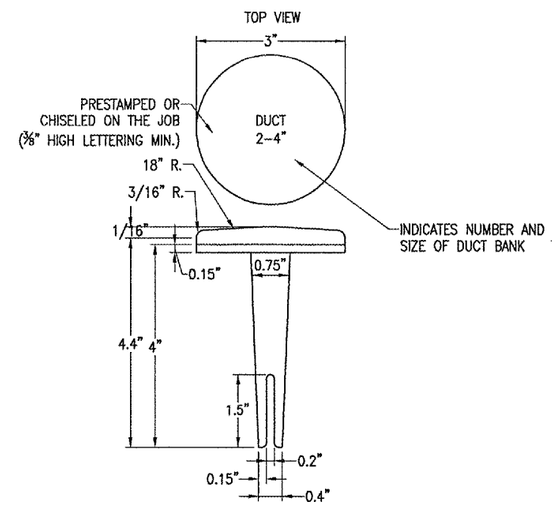

BITUMINOUS PAVEMENT DUCT MARKERS

"NOT TO SCALE"

NOTE:
TOP OF MARKER SHALL BE FLUSH WITH FINISHED PAVEMENT SURFACE. MARKER MAY BE INSTALLED IN A DRILLED HOLE AND SECURED WITH EPOXY GLUE.

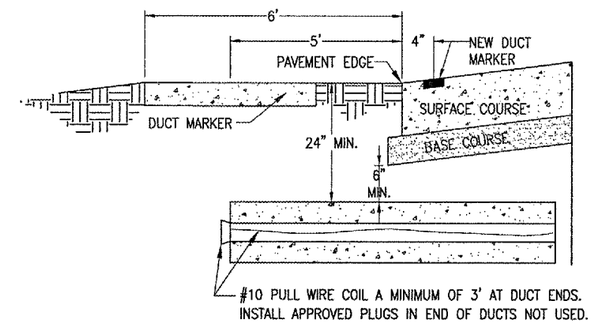

UNDERGROUND ELECTRICAL DUCT

(NOT TO SCALE)

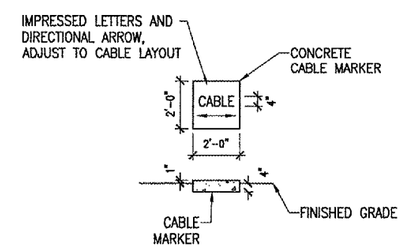

TURF CABLE MARKERS

"NOT TO SCALE"

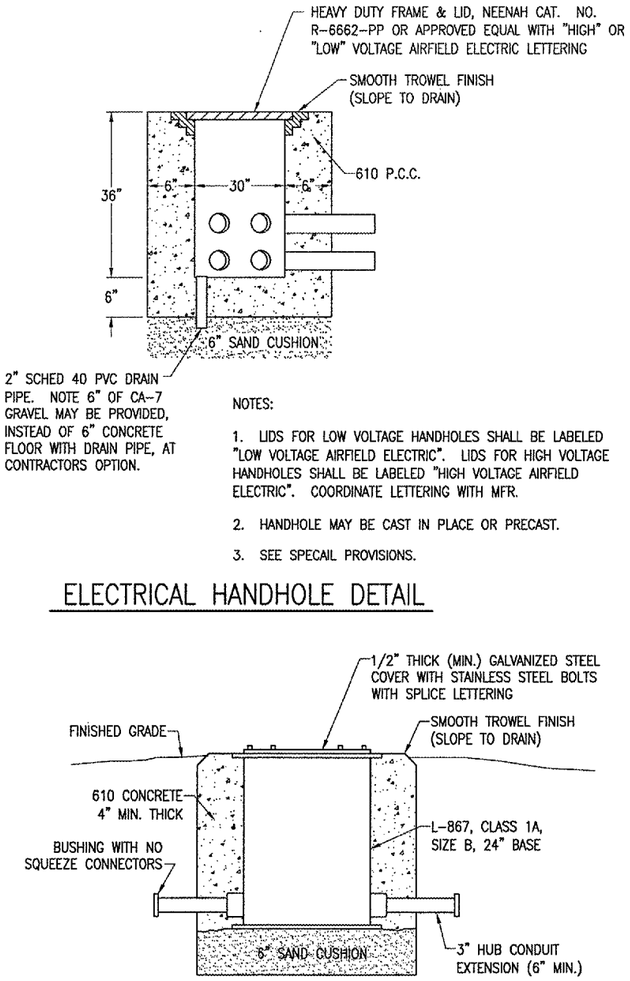

SPLICE CAN DETAIL

(NOT TO SCALE)

INCLUDE INTERNAL AND EXTERNAL GROUND LUGS

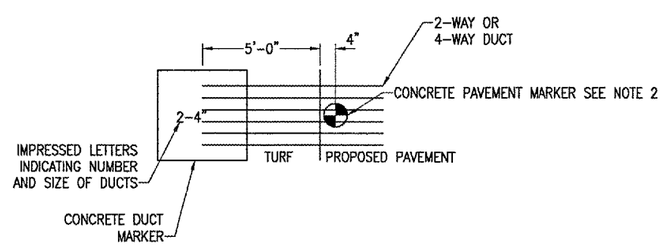

DUCT MARKER DETAIL

"NOT TO SCALE"

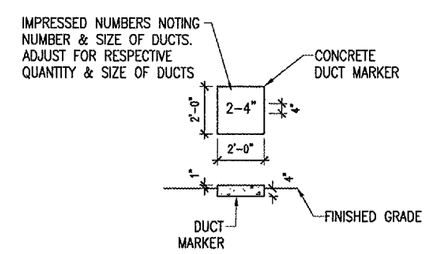

TURF DUCT MARKERS

"NOT TO SCALE"

DI022

HANSON
HANSON PROFESSIONAL SERVICES INC.
815 Commerce Drive Suite 200
Oak Brook, Illinois 60523
Telephone: 630.990.3800
Fax: 630.990.3801

City of Dixon
CITY OF DIXON, ILLINOIS
Post Office Box 386
Dixon, Illinois 61021
Telephone: 815.288.1485

DIXON MUNICIPAL AIRPORT
CHARLES R. WALGREEN FIELD

CONSTRUCT REPLACEMENT
AIRFIELD ELECTRICAL VAULT

AIP PROJECT NO. 3-17-0036-B8
IDA PROJECT NO. C73-3548

No.	Drawing Issue Description	Date	By

Date
JUNE 23, 2006

Sheet Title
ELECTRICAL DETAILS
SHEET 1

843-05C8010
Project Number
KNL 05/23/06
Layout By Date
KNL 05/23/06
Designed By Date
RMH 06/23/06
Reviewed By Date
MV --- ---
Drawn By

E18
SHEET 32 OF 36
Sheet No.