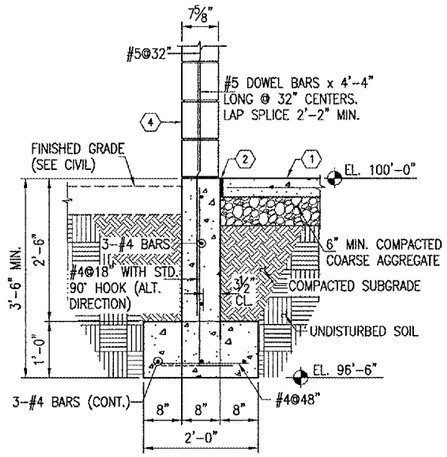

1 / S5.1
SCALE: ¾"=1'-0"

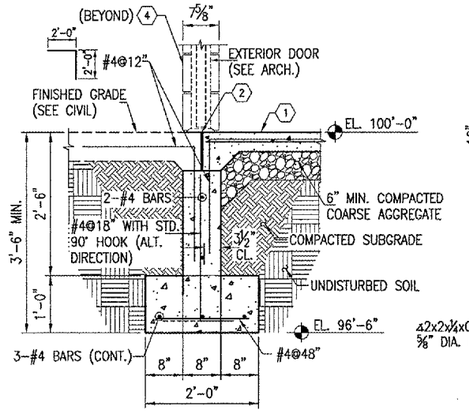

2 / S5.1
SCALE: ¾"=1'-0"

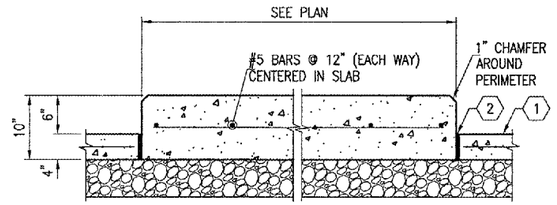

3 / S5.1
SCALE: 1"=1'-0"

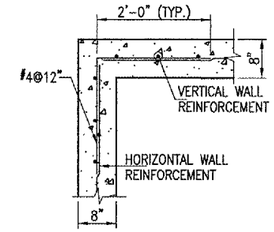

TYPICAL WALL CORNER
4 / S5.1
SCALE: NONE

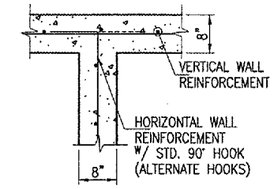

TYPICAL WALL INTERSECTION
5 / S5.1
SCALE: NONE

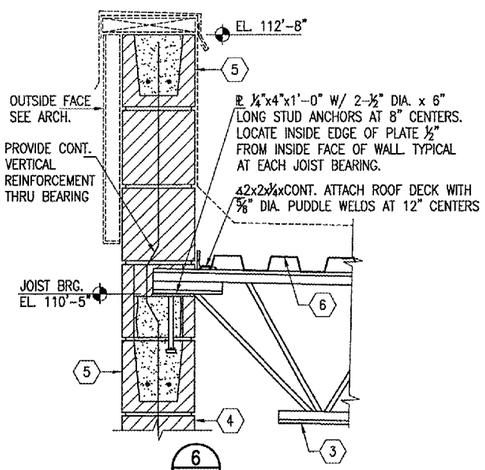

6 / S5.1
SCALE: 1½"=1'-0"

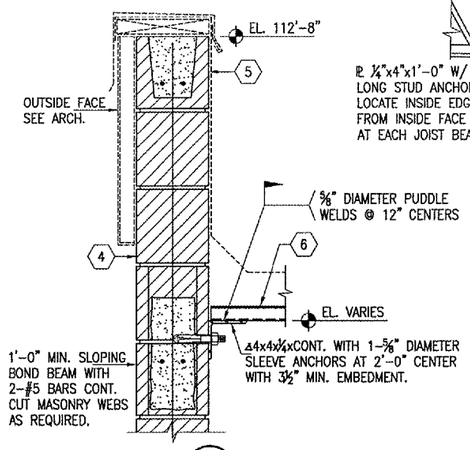

7 / S5.1
SCALE: 1½"=1'-0"

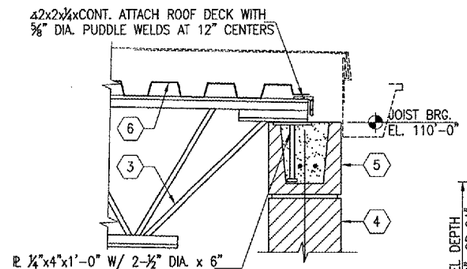

8 / S5.1
SCALE: 1½"=1'-0"

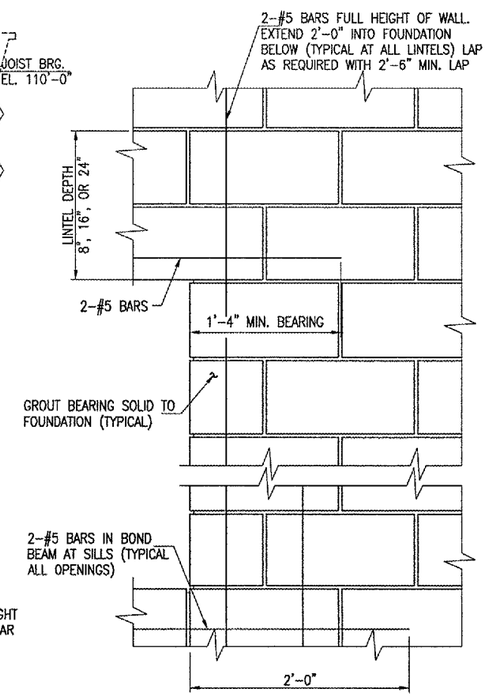

TYPICAL MASONRY REINFORCEMENT AT OPENINGS AND LINTEL BEARINGS
9 / S5.1
SCALE: 1½"=1'-0"

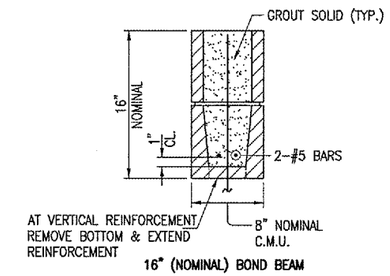

NOTE:
PROVIDE BOND BEAM AT TOP OF WALLS AND AT LINTELS SHOWN ON THE PLANS.

TYPICAL MASONRY LINTEL DETAILS
10 / S5.1
SCALE: 1½"=1'-0"

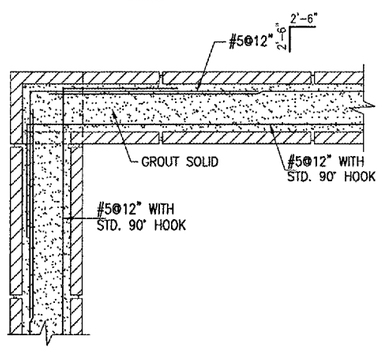

TYPICAL BOND BEAM REINFORCEMENT CORNER
11 / S5.1
SCALE: 1½"=1'-0"

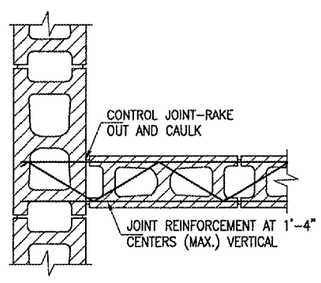

INTERSECTION OF NON-TOOTHED WALLS
12 / S5.1
SCALE: 1½"=1'-0"

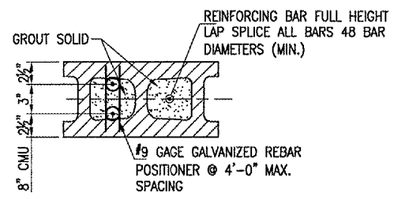

TYPICAL VERTICAL BAR PLACEMENT DETAIL
13 / S5.1
SCALE: 1½"=1'-0"

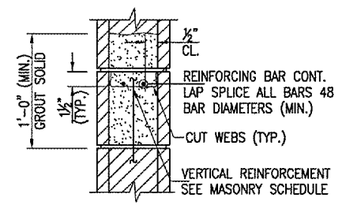

TYPICAL HORIZONTAL BAR PLACEMENT DETAIL
14 / S5.1
SCALE: 1½"=1'-0"

NOTE:
COARSE AGGREGATE UNDER FOUNDATION FOOTINGS AND SLAB SHALL NOT BE MEASURED SEPARATELY FOR PAYMENT, BUT SHALL BE INCLUDED IN THE UNIT PRICE FOR CONSTRUCT ELECTRICAL VAULT, ITEM AR109100.

DI022

HANSON
HANSON PROFESSIONAL SERVICES INC.
815 Commerce Drive Suite 200
Oak Brook, Illinois 60523
Telephone: 630.990.3800
Fax: 630.990.3801

City of Dixon

CITY OF DIXON, ILLINOIS
Post Office Box 386
Dixon, Illinois 61021
Telephone: 815.288.1485

DIXON MUNICIPAL AIRPORT
CHARLES R. WALGREEN FIELD

CONSTRUCT REPLACEMENT
AIRFIELD ELECTRICAL VAULT

AIP PROJECT NO. 3-17-0036-B8
IDA PROJECT NO. C73-3548

No.	Drawing Issue Description	Date	By

Date
JUNE 23, 2006

Sheet Title
STRUCTURAL SECTIONS AND DETAILS

843-05C8010
Project Number
MAE 06/19/06
Layout By Date
GLC 06/13/06
Designed By Date
RMH 6/23/06
Reviewed By Date
MAE | --- | ---
Drawn By

S5.1
SHEET 13 OF 36
Sheet No.