STATE OF ILLINOIS
DEPARTMENT OF TRANSPORTATION

ROUTE NO.	SECTION	COUNTY	TOTAL SHEETS	SHEET NO.
-	-	-	63	29
FED. ROAD DIST. NO. 7		ILLINOIS	FED. AID PROJECT-	

SHEET NO. 5
39 SHEETS

Contract #76899

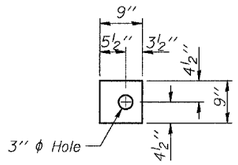

FABRIC BEARING PAD FIXED

FABRIC BEARING PAD EXPANSION

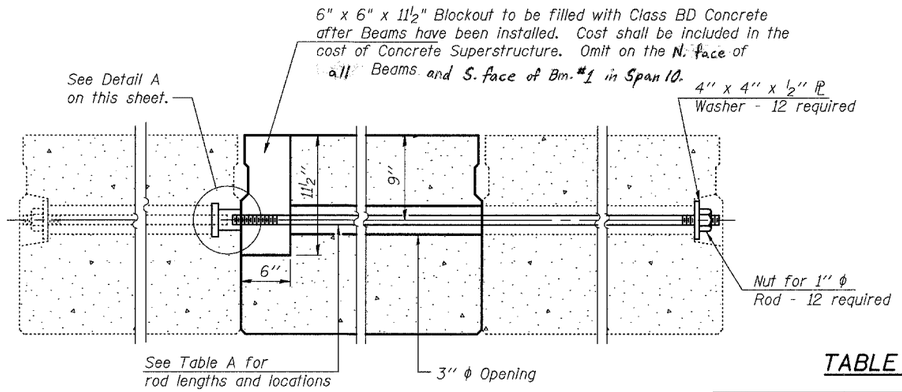

TYPICAL TRANSVERSE TIE ASSEMBLY

TABLE A

Location	No.	Length
Span 8	2	8'-11"
Span 9, 10 & 11	2	5'-11"
Span 7 & 14	2	2'-11"

(Thread each end 4")

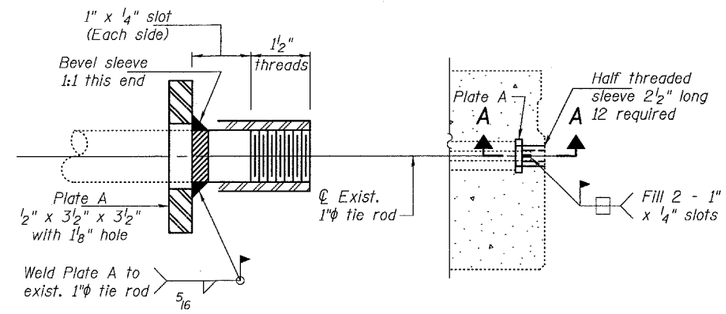

SECTION A-A

DETAIL A

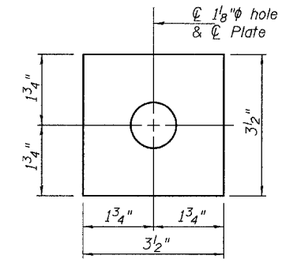

PLATE A

(12 Required)

NOTES

1. Prestressing steel shall be uncoated high strength, low relaxation 7-wire strand, Grade 270.
2. The nominal diameter shall be ½" and the nominal cross-sectional area shall be 0.153 sq. in.
3. Lifting loops shall be 2 - ½" ϕ-270 ksi strands, as shown.
4. The 1" ϕ rods in the transverse tie assembly shall be tightened to a snug fit and the threads set. Pockets that receive transverse tie bar on outside shall be filled with grout after transverse tie assembly is in place.
5. The bearing seat surfaces shall be adjusted by shimming to assure firm and even bearing. Two ⅛" fabric adjusting shims of the dimensions of the Bearing Pad shall be provided for each bearing.
6. Keyway surfaces shall be cleaned to remove form oil or other bond breaking material prior to shipment of the beams. Cleaning shall be done by sandblasting the keyway areas between top of the beam and the bottom edge of the key.
7. Corrosion Inhibitor, as covered in the Special Provisions, shall be used in the concrete for precast prestressed concrete deck beams.
8. Required Release Strength, f'ci, shall be 4,000 p.s.i.
9. Place strands symmetrically about ℄ of beam.
10. Each beam shall have four lifting loops, two cast in each end as shown. Loops shall be burned off after beams have been erected.

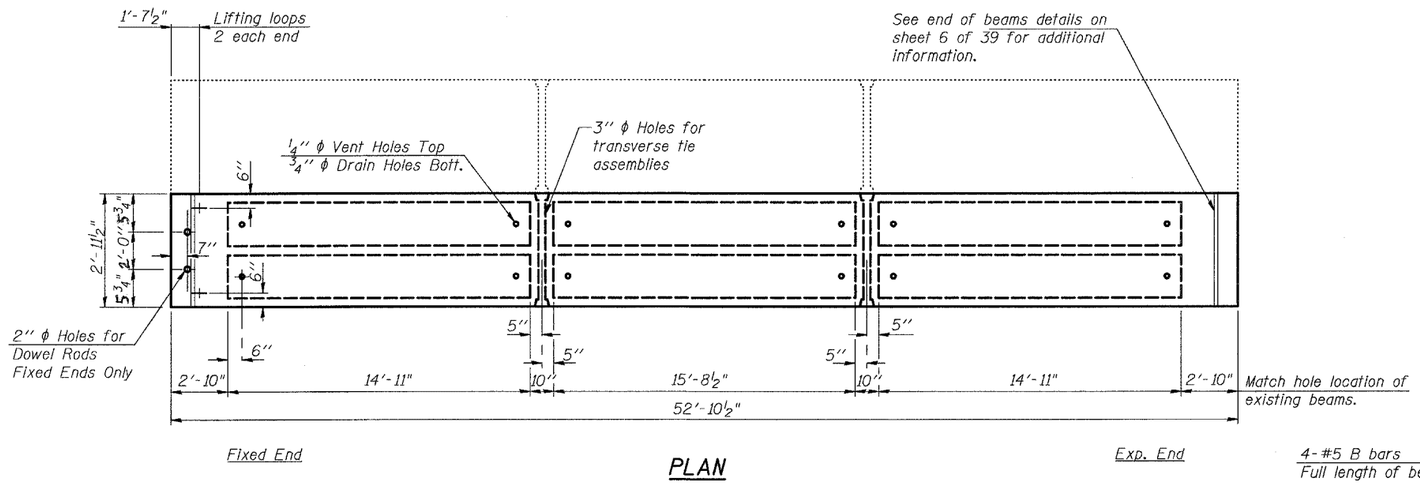

PLAN

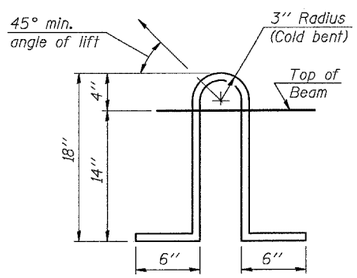

LIFTING LOOP DETAIL

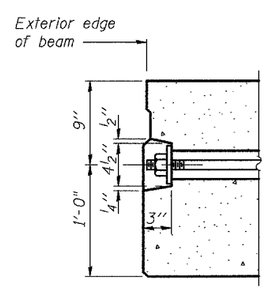

FASCIA BEAM TRANSVERSE TIE DETAIL

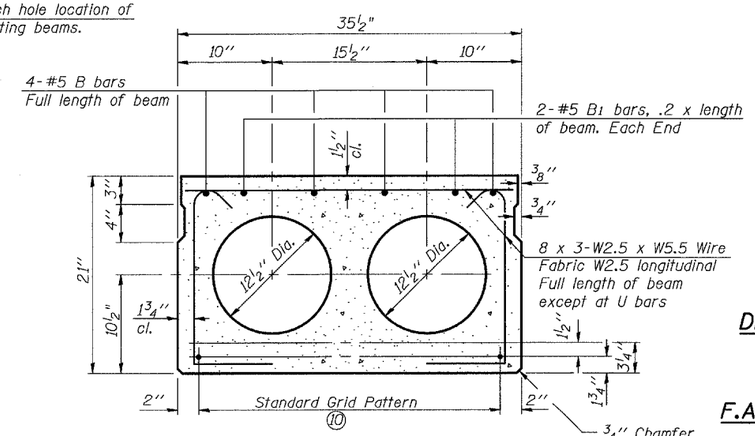

TYPICAL SECTION REPLACEMENT BEAM

½" ϕ Strands, Each Strand Stressed to 30,900 Lbs.
6-Strands 1¾" up, 8-Strands 3¼" up, 2-Strands 9" up

(7 Required)

STAGE I
DECK BEAM REPLACEMENT DETAILS
OLD U.S. ROUTE 50 OVER
SHOAL CREEK
F.A.S. ROUTE 1780 - SECTION 24-BR-
CLINTON COUNTY
STA. 102+51.47
STRUCTURE NO. 014-0062

PLOT DATE = 05/15/2006
FILE NAME = h:\p\25004\technical production\structural\sn 014-0062\final plans\0062-05-stageht3.dgn
PLOT SCALE = 0:1.0000 ':' / IN.
USER NAME = $USER$