CONTRACT NO. 60832

F.A. RTE.	SECTION	COUNTY	TOTAL SHEETS	SHEET NO.
2710	(12,13-3219)RS-7	Cook	22	13
STA.	TO STA.			
FED. ROAD DIST. NO.	ILLINOIS	FED. AID PROJECT		

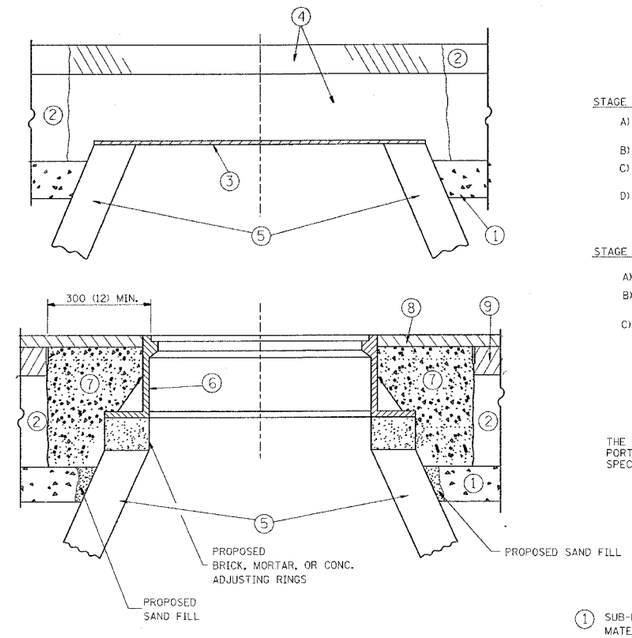

CONSTRUCTION PROCEDURES

STAGE 1 (BEFORE PAVEMENT MILLING)

A) REMOVE A MINIMUM OF 300 (12) OF THE PAVEMENT FROM AROUND THE STRUCTURE.

B) REMOVE THE EXISTING FRAME AND LID FROM THE STRUCTURE.

C) COVER THE STRUCTURE OPENING WITH A 900 (36) DIAMETER METAL PLATE.

D) BACKFILL WITH CRUSHED STONE AND A MINIMUM 40 (1½) THICK BITUMINOUS MATERIAL APPROVED BY THE ENGINEER.

STAGE 2 (AFTER PAVEMENT MILLING)

A) REMOVE THE BITUMINOUS MATERIAL AND CRUSHED STONE.

B) INSTALL THE FRAME AND LID; ADJUST THE FRAME TO ITS FINAL SURFACE ELEVATION.

C) THE SURROUNDING SPACE SHALL BE FILLED WITH CLASS SI CONCRETE, OR BITUMINOUS CONCRETE SURFACE OR BINDER COURSE MATERIAL TO THE ELEVATION OF THE SURFACE OF THE EXISTING BASE COURSE OR THE BINDER COURSE.

THE PROCEDURE EXPLAINED ABOVE SHALL CONFORM TO THE APPLICABLE PORTIONS OF SECTIONS 353, 406, 602, AND 603 OF THE STANDARD SPECIFICATIONS.

LEGEND

1. SUB-BASE GRANULAR MATERIAL
2. EXISTING PAVEMENT
3. 900 (36) DIAMETER METAL PLATE
4. PROPOSED CRUSHED STONE AND BITUMINOUS MATERIAL
5. EXISTING STRUCTURE
6. FRAME AND LID (SEE NOTES)
7. CLASS SI CONCRETE, BITUMINOUS CONCRETE SURFACE OR BINDER COURSE MATERIAL
8. PROPOSED BITUMINOUS CONCRETE SURFACE COURSE
9. PROPOSED BITUMINOUS CONCRETE BINDER COURSE

NOTES:

EXISTING BROKEN FRAMES AND LIDS SHALL BE REMOVED AND DISPOSED OF BY THE CONTRACTOR AND SHALL BE REPLACED AS DIRECTED BY THE ENGINEER. REPLACEMENT FRAMES AND LIDS WILL BE PAID FOR IN ACCORDANCE WITH ARTICLE 109.04 OF THE STANDARD SPECIFICATIONS UNLESS A SEPARATE PAY ITEM HAS BEEN PROVIDED.

IF THE EXISTING LIDS ARE OPEN, THE FRAME WILL BE ADJUSTED TO THE ELEVATION OF THE MILLED PAVEMENT SURFACE PRIOR TO THE MILLING OPERATION. THE FRAME WILL NOT BE REMOVED AND COVERED BY THE METAL PLATE.

CITY OF CHICAGO CASTINGS ARE THE PROPERTY OF THE CITY AND THE CONTRACTOR SHALL NOTIFY THE CITY FOR REMOVAL AND DISPOSITION OF THE CASTINGS.

THE METAL PLATE USED TO COVER THE STRUCTURE SHALL REMAIN THE PROPERTY OF THE CONTRACTOR.

WHEN STRUCTURES ARE TO BE ADJUSTED OR RECONSTRUCTED, THE LOWERING AND RAISING OF THE FRAMES AND LIDS WILL NOT BE PAID FOR SEPARATELY BUT WILL BE INCLUDED IN THE COST OF THE CORRESPONDING PAY ITEM.

LOCATION OF STRUCTURES:

THE CONTRACTOR WILL BE REQUIRED TO KEEP A RECORD OF THE LOCATIONS OF THE BURIED STRUCTURES ACCORDING TO THE STATION AND DISTANCE LEFT OR RIGHT OF THE CENTERLINE OF PAVEMENT. UPON COMPLETION OF THE WORK, THE CONTRACTOR WILL DELIVER THE RECORD TO THE ENGINEER.

BASIS OF PAYMENT: FRAMES AND LIDS TO BE ADJUSTED, SPECIAL EACH

NEW FRAMES AND LIDS, WHEN SPECIFIED, WILL BE PAID FOR SEPARATELY.

DETAILS FOR FRAMES AND LIDS ADJUSTMENT WITH MILLING

ALL DIMENSIONS ARE IN MILLIMETERS (INCHES) UNLESS OTHERWISE SHOWN

REVISIONS	
NAME	DATE
R. SHAH	10/25/94
R. SHAH	01/30/95
R. SHAH	03/10/95
A. ABBAS	03/21/97
R. WIEDEMAN	05/14/04

ILLINOIS DEPARTMENT OF TRANSPORTATION

DETAILS FOR FRAMES AND LIDS ADJUSTMENT WITH MILLING

SCALE: VERT. HORIZ.

DATE: 6/4/2006

DRAWN BY

CHECKED BY

BD600-03 (BD-8)

REVISION DATE: 05/17/04

PLOT DATE = 6/4/2006
FILE NAME = M:\diasrsd\bd08.dgn
PLOT SCALE = 49.9999 ' / IN.
USER NAME = hamdanah