STATE OF ILLINOIS
DEPARTMENT OF TRANSPORTATION

ROUTE NO.	SECTION	COUNTY	TOTAL SHEETS	SHEET NO.
FAI-55	**	WILL	50	44
FED. ROAD DIST. NO. 7		ILLINOIS	FED. AID PROJECT-	

SHEET NO. 7
13 SHEETS

** SECTION 2005-063 I
CONTRACT NO. 60A67

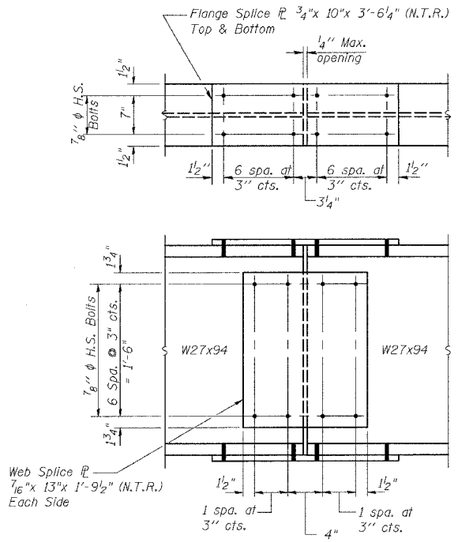

SPLICE

(For W27X94)
(2 Locations NB, 2 Locations SB)

Note:
All bolts in splices are AASHTO M 164 (ASTM 325) 7/8" ϕ with Class A Contact Surfaces and Standard Holes.

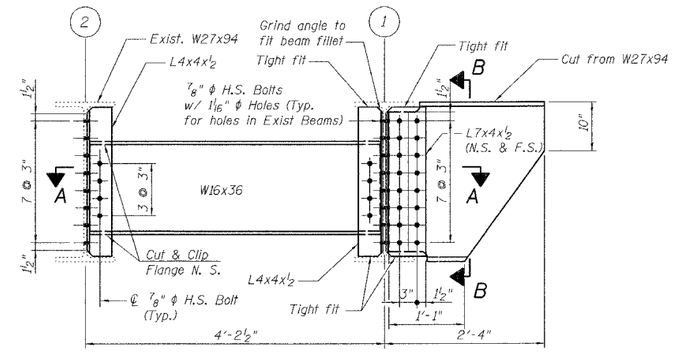

INTERIOR DIAPHRAGM D3 AND BRACKET DETAIL

(NB ONLY - 12 REQUIRED)

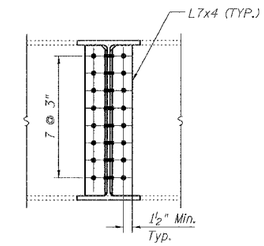

SECTION B-B

INTERIOR GIRDER MOMENT TABLE (NB PROPOSED BEAMS 7A & 7B, NON-COMPOSITE)		0.4 Sp. 1 or 0.6 Sp. 3	Pier 1 or Pier 2	0.5 Sp. 2
I	(in)4	3270	3270	3270
S	(in)3	243	243	243
D	(k/ft.)	1.230	1.230	1.230
MD	('k)	127	202	93
ML	('k)	196	153	191
M (Imp)	('k)	59	46	57
5/3[ML+M(Imp)]	('k)	424	331	412
Ma	('k)	717	693	659
fsD	(k.s.i.)	6.3	10.0	4.6
fs5/3(L+Imp)	(k.s.i.)	21.0	16.3	20.4
fs (Overload)	(k.s.i.)	27.2	26.3	25.0
fs (Total)	(k.s.i.)	35.4	34.2	32.5

INTERIOR GIRDER REACTION TABLE (NB PROPOSED BEAMS 7A & 7B)		Abut.	Pier
RD	(k)	17.7	55.5
RL	(k)	35.4	44.1
Imp.	(k)	10.6	13.2
R (Total)	(k)	63.7	112.8

I and S are the moment of inertia and section modulus of the steel section used in computing fs (Total & Overload).
Ma (Applied Moment)=1.3[MD + 5/3(ML + M(Imp))].
fs (Overload) is the sum of the stresses due to MD + 5/3(ML + M(Imp)).
fs (Total) (Non-compact section) is the sum of the stresses due to 1.3[MD + 5/3(ML + M(Imp))].

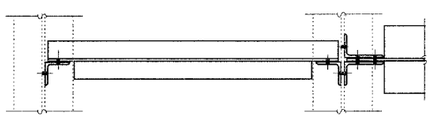

SECTION A-A

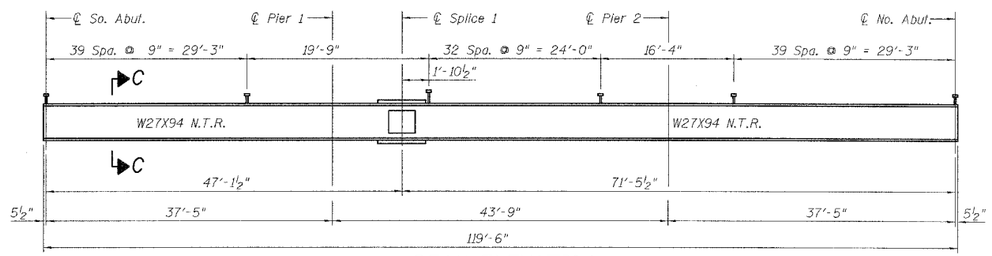

BEAM ELEVATION

(For SB Beams 7A & 7B and NB Beams 7A & 7B)

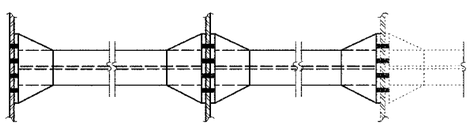

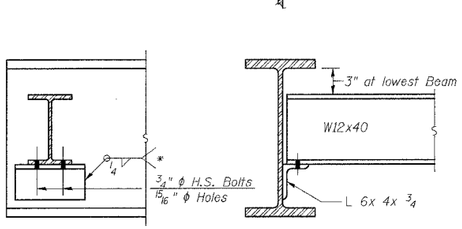

END DIAPHRAGM D1

(4 D1 Required NB)
(4 D1 Required SB)

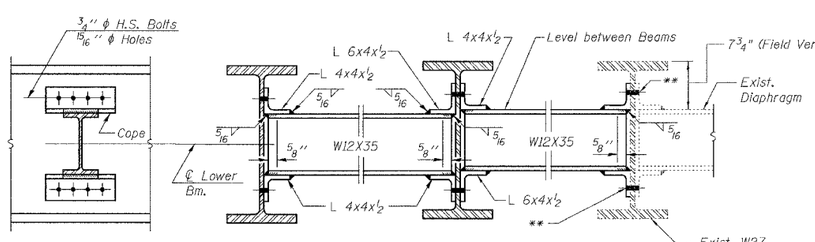

INTERIOR DIAPHRAGM D2

(10 D2 Required NB)
(10 D2 Required SB)

* Field weld angles to existing NB & SB Beams 7.

** At existing NB & SB Beams 7, remove existing bolts. Drill 15/16" ϕ holes in new connector angle L 6x4x1/2" (cut vertical leg as required) and reconnect with new 3/4" ϕ H.S. Bolts.

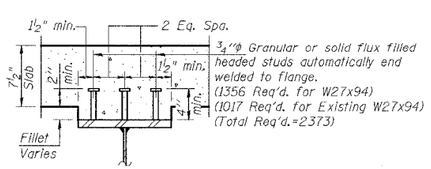

SECTION C-C

(For Information Only)

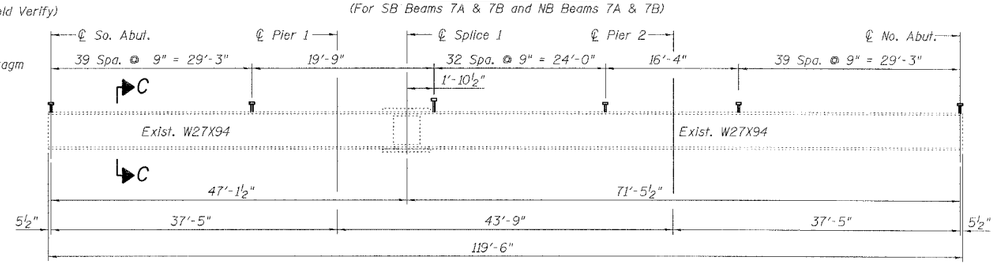

BEAM ELEVATION

(For Existing SB Beam 7 and NB Beams 1 & 7)

Notes:

1. N.T.R. denotes members subject to the supplemental requirements for notch toughness (Zone 2).
2. Two hardened washers shall be required over all oversize holes for diaphragms.
3. Work this Sheet with Sheet No. 6.

DESIGNED	J. ZUO
CHECKED	A. HAMMAD
DRAWN	J. ZUO
CHECKED	J.GRAINAWI

Date: 5/15/2006

PARSONS BRINCKERHOFF

STRUCTURAL STEEL DETAILS I
I-55 OVER MS (ABANDONED) R.R.
FAI ROUTE 55-SEC. 2005-063 I
WILL COUNTY
STA. 710+34.86
STRUCTURE NO. 099-0022 (NB)
STRUCTURE NO. 099-0023 (SB)