CENTER LANE CLOSURE

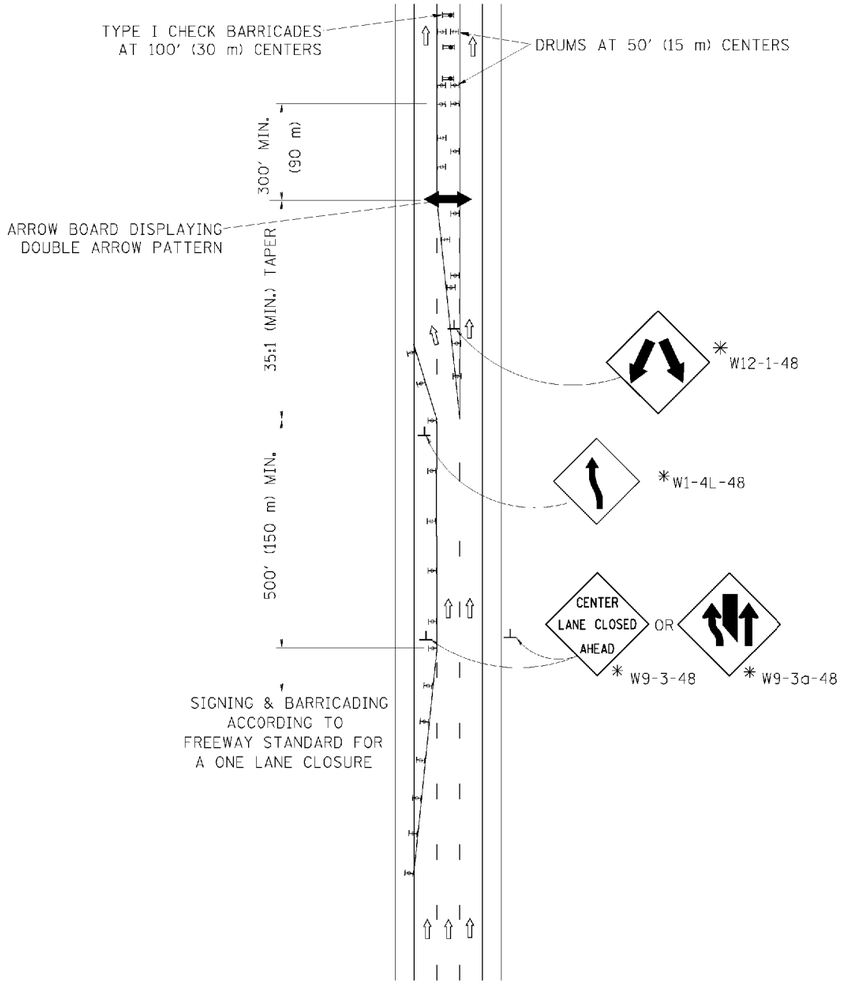

INSTALLATION SEQUENCE

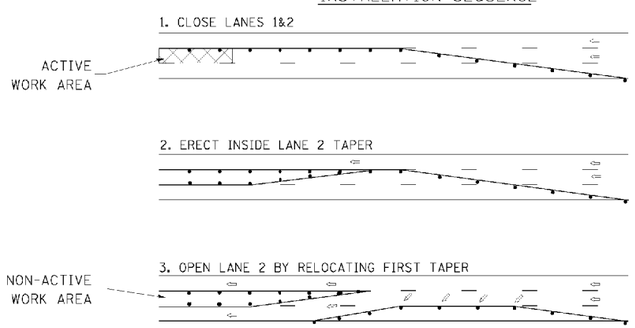

4. REMOVE CLOSURE IN REVERSE ORDER

NOTES

1. DRUMS WITH STEADY BURN LIGHTS SHALL BE USED AT 50' (15 m) CENTERS ON ALL TAPERS AND TANGENTS IN ADVANCE OF WORK AREA.
2. CLOSURE SHALL BE USED ONLY FOR OPERATIONS LASTING 72 HOURS OR LESS.
3. CENTER LANE CLOSURE CONFIGURATION IS NOT TO BE USED WITH WORKERS PRESENT.

SHOULDER LANE

NOTE: CLOSURE SHALL BE USED ONLY FOR OPERATIONS LASTING 72 HOURS OR LESS.

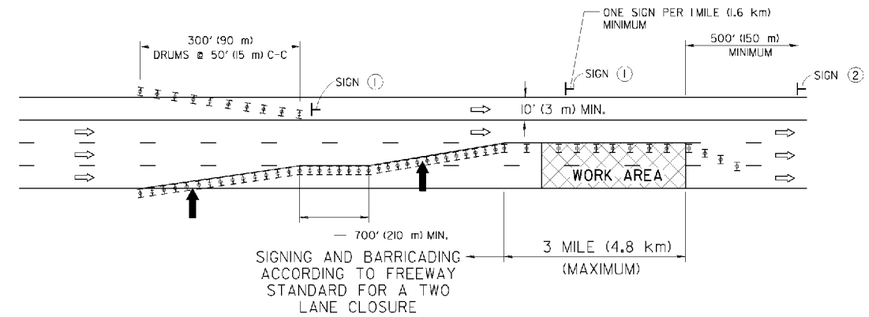

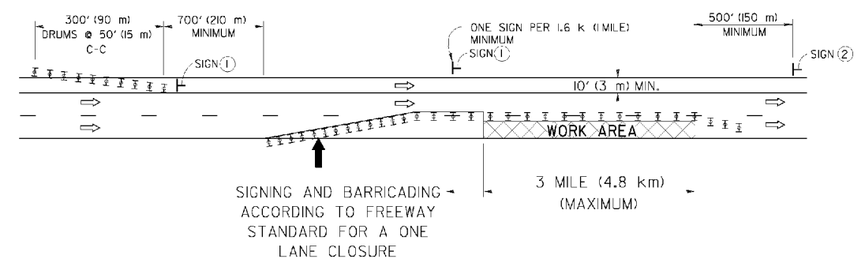

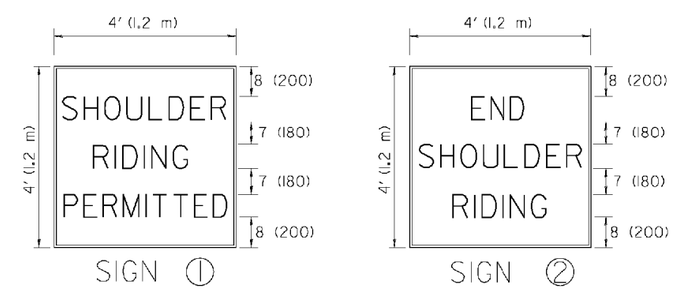

6 (150) SERIES "C" LEGEND
BLACK LEGEND
WHITE REFLECT. BACKGROUND
1 (25) BORDER

SYMBOLS

- DIRECTION OF TRAFFIC
- ARROWBOARD
- ACTIVE WORK AREA
- SIGN ON PORTABLE OR PERMANENT SUPPORT *
- TYPE II BARRICADE, OR DRUM WITH MONO-DIRECTIONAL STEADY BURN LIGHT

ALL DIMENSIONS ARE IN INCHES (MILLIMETERS) UNLESS OTHERWISE SHOWN

* ALL SIGNS SHALL BE MOUNTED AT A MINIMUM HEIGHT OF 5' (1.5 m).

FILE NAME =	USER NAME = leyes	DESIGNED -	REVISED - J.A.F. 04-03	STATE OF ILLINOIS DEPARTMENT OF TRANSPORTATION	TRAFFIC CONTROL DETAILS FOR FREEWAY CENTER LANE CLOSURE SHOULDER LANE			F.A. RTE.	SECTION	COUNTY	TOTAL SHEETS / SHEET NO.
		DRAWN	REVISED S.P.B. 01-07					94	49-1-R-1	LAKE	677 / 503
	PLOT SCALE = 50.000 ' / IN.	CHECKED -	REVISED - S.P.B. 12-09						TC-25	CONTRACT NO. 60L77	
	PLOT DATE = 1/25/2010	DATE	REVISED		SCALE: NONE	SHEET NO. 1 OF 1 SHEETS	STA. NA TO STA. NA	FED. ROAD DIST. NO. 1	ILLINOIS	FED. AID PROJECT	