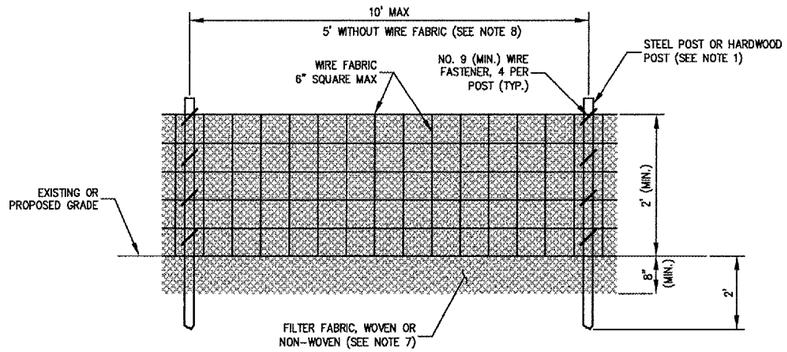

ELEVATION

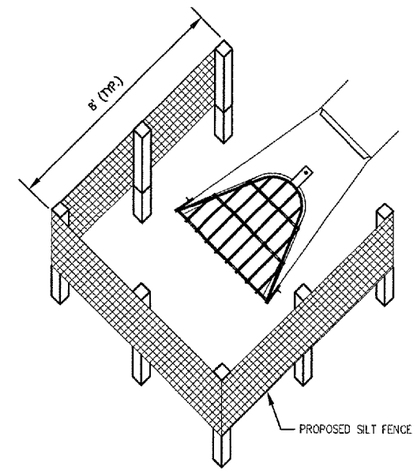

SILT FENCE PLACEMENT
AT FLARED END SECTIONS (FES)

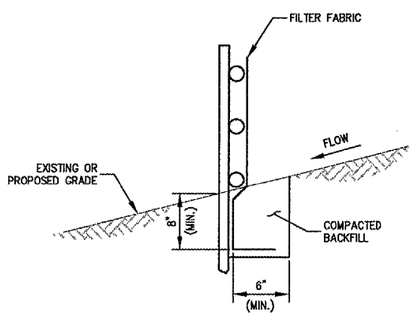

FABRIC ANCHOR DETAIL

NOTES:

1. FENCE POST SHALL BE EITHER STEEL "T" LINE POST OR HARDWOOD POST WITH A MINIMUM SECTIONAL AREA OF 3.0 SQUARE INCHES.
2. TOP AND BOTTOM WIRE OF WIRE FABRIC SHALL BE MINIMUM GAGE NO. 9. INTERMEDIATE WIRES OF THE WIRE FABRIC SHALL BE MINIMUM GAGE NO. 11.
3. WIRE FABRIC SHALL BE SECURELY FASTENED TO FENCE POSTS WITH NO. 9 GAGE WIRE MINIMUM. FOUR (4) FASTENERS PER POST REQUIRED.
4. FILTER FABRIC SHALL BE SECURELY FASTENED TO WIRE FABRIC AND POSTS WITH TIES OR STAPLES SPACED AT 12" APART AT THE TOP, MIDDLE AND BOTTOM.
5. WHEN TWO SECTIONS OF FILTER FABRIC MEET, THEY SHALL BE OVERLAPPED BY 6" AND FOLDED AND ATTACHED TO THE WIRE FABRIC AT A POST.
6. MAINTENANCE SHALL BE PERFORMED AS NEEDED AND MATERIAL REMOVED AND REPLACED WHEN BULGES DEVELOP IN THE SILT FENCE.
7. FILTER FABRIC SHALL BE IN ACCORDANCE WITH SPECIAL PROVISIONS WITH EQUIVALENT OPENING SIZE OF AT LEAST 30 FOR NONWOVEN AND 50 FOR WOVEN.
8. WIRE FABRIC MAY BE OMITTED IF A MAXIMUM OF 5 FEET IS USED FOR POST-TO-POST SPACING.
9. SILT FENCE SHALL BE INSTALLED PRIOR TO ANY GRADING WORK IN THE AREA TO BE PROTECTED. PERIODIC INSPECTION SHALL BE PERFORMED AND REQUIRED MAINTENANCE SHALL BE PROVIDED AFTER EACH RAIN EVENT.
10. FENCE POSTS SHALL BE REMOVED WHEN DIRECTED AT PROJECT END.

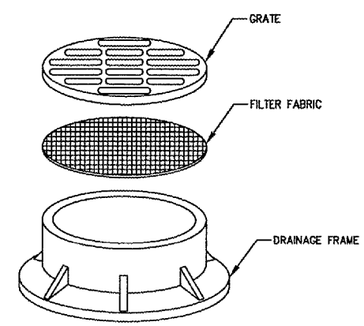

INLET PROTECTION – DRAINAGE STRUCTURE FILTER WRAP

NOTES:

1. FILTER WRAP TO BE PLACED IN ALL MANHOLES AS SHOWN.
2. FABRIC SHALL BE IN CONFORMANCE WITH MATERIALS SPECIFIED FOR SILT FENCE.
3. FABRIC SHALL OVERLAY FRAME BY 2 INCHES (MINIMUM).
4. CONTRACTOR SHALL CLEAR DEBRIS AND SILT AS REQUIRED FROM FABRIC TO MAINTAIN DRAINAGE THROUGH THE STRUCTURE.
5. FABRIC SHALL REMAIN IN PLACE UNTIL TURFED AREAS HAVE DEVELOPED A MINIMUM OF 80% OF COVERAGE.
6. COST OF FILTER WRAP SHALL BE INCIDENTAL TO INLET PROTECTION.

DETAILS SHOWN ARE NOT TO SCALE

LE038

HANSON

HANSON PROFESSIONAL SERVICES INC.

815 Commerce Drive, Suite 200
Oak Brook, Illinois 60523
Telephone: 630.990.3800
Fax: 630.990.3801

Illinois Professional Design Firm
Registration No. 184-001084

© Copyright Hanson Professional Service Inc. 2007

Chicago-Romeoville Airport

JOLIET REGIONAL PORT DISTRICT

1 George Michas Drive
Romeoville, Illinois 60446
Telephone: 815.838.9497
Fax: 815.838.9524

REMOVE AND REPLACE PORTIONS OF RUNWAY 9-27 AND TAXIWAY C

AIP PROJECT NO. 3-17-0140-B41
IDA PROJECT NO. LOT-3709

No.	Drawing Issue Description	Date	By

Date
JUNE 18, 2007

Sheet Title
STORM WATER POLLUTION PREVENTION PLAN DETAILS

840-07B8053
Project Number

LDH	06/05/07
Layout By	Date
LDH	06/05/07
Designed By	Date
RMH	06/18/07
Reviewed By	Date
LDH	---- | ----
Drawn By	

27
Sheet No.

L:\07JOBS\00840\07B8053\DRAWINGS\SHEETS\27-SWPP DETAILS.DWG JUN 19, 2007 4:35PM DLG