ROUTE NO.	SECTION	COUNTY	TOTAL SHEETS	SHEET NO.
X	06-00121-00-LS	COOK	15	13
ILLINOIS PROJECT	TE-00D1(773)			
VILLAGE SECTION	06-00121-00-LS			
CONTRACT NO.	83927			

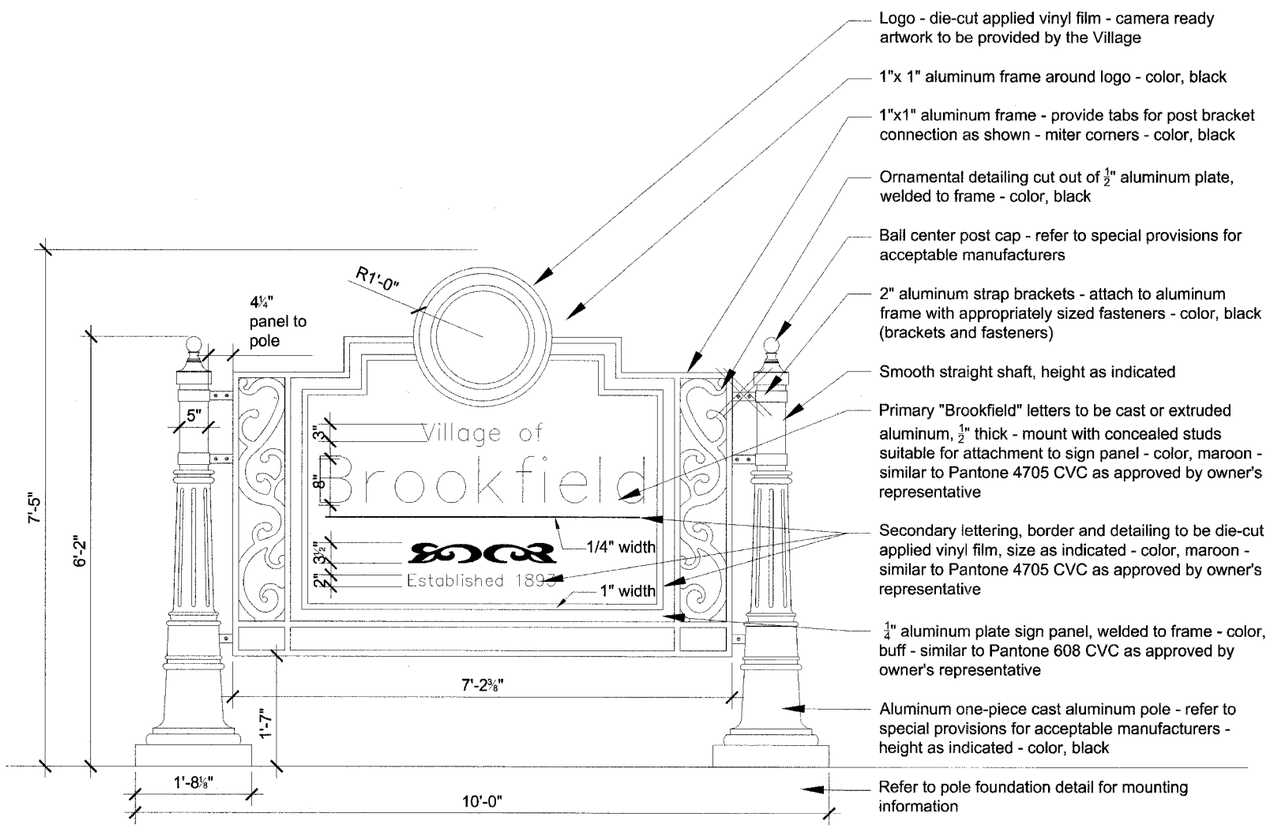

ENTRANCE SIGN

Signage General Notes

1. Sign fabricator to submit shop drawings including all materials, connection methods, sizing, text, layout and color designations per details as shown on plans. If modifications are proposed by the fabricator, provide comprehensive explaination to the owner's representative for review. The owner's representative has sole discretion to approve or reject the proposed modifications to achieve a superior product.

2. Sign fabricator to submit manufacturer's product information for poles and vinyl film, color chip samples of all specified colors, and mock-ups of all artwork, logos, graphics and text for approval by the owner's representative prior to fabrication.

3. All aluminum materials to be powder coated per the special provisions, colors as indicated on details.

4. All text to be Goudy Old Style or approved equal as determined by the owner's representative.

5. All work is subject to the standard specifications unless otherwise indicated. Refer to special provisions for additional information, standards and notes.

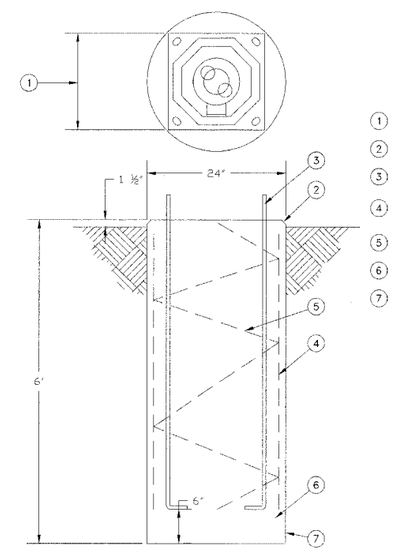

1. MANUFACTURER TO FURNISH TEMPLATE DRAWING FOR SETTING OF ANCHOR BOLTS.
2. 1" CHAMFER
3. 4-1" x 36" STEEL ANCHOR BOLTS, TOP 10" THREADED AND GALVANIZED.
4. 8-#5 REINFORCING BARS EQUALLY SPACED AROUND AN 18" DIA. CIRCLE
5. #4 SPIRAL TIE BARS WITH 6" PITCH
6. CLASS SI CONCRETE
7. FOUNDATION LOCATIONS AS SHOWN ON PLAN SHEETS.

SIGN POLE FOUNDATION

HANCOCK ENGINEERING
Civil Engineers
Municipal Consultants
Established 1911
9933 Roosevelt Road
Westchester, Illinois 60154-2780
Phone: 708/865-0300
Fax: 708/865-1212

TRANSPORTATION CORRIDOR BEAUTIFICATION PROJECT
VILLAGE OF BROOKFIELD, ILLINOIS

ENTRY SIGN DETAILS

SCALE:	NOT TO SCALE
DRAWN BY:	LEV/MK/ECW/TSG
BOOK NO.:	SDR33
DATE:	2-9-07
E.H.E. NO.:	125-06-33580
REVISION:	

SHEET 13 OF 15

Drawing file: W:\Projects\125061335 - Grand Blvd Beautification\Sign Details.dwg May 08, 2007 - 10:44am