CONTRACT NO. 7404

F.A.P. RTE.	SECTION	COUNTY	TOTAL SHEETS	SHEET NO.
328	(BBR-1)B-1	WAYNE	39	13
STA.		TO STA.		
FED. ROAD DIST. NO.	ILLINOIS	FED. AID PROJECT		

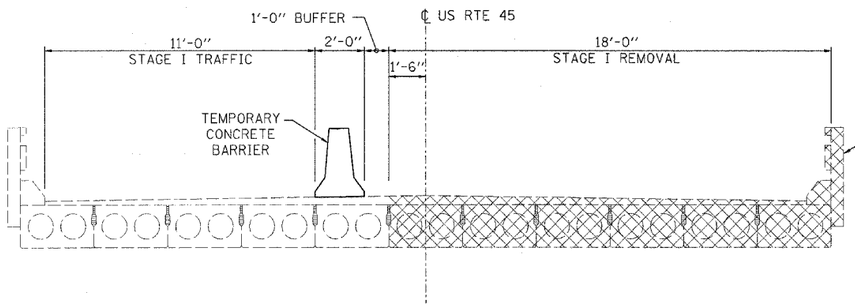

STAGE I REMOVAL

REMOVAL OF EXISTING STEEL BRIDGE RAIL IS INCLUDED WITH REMOVAL OF EXISTING SUPERSTRUCTURE

NOTE:

CROSS HATCHED AREAS INDICATE REMOVAL OF EXISTING SUPERSTRUCTURE.

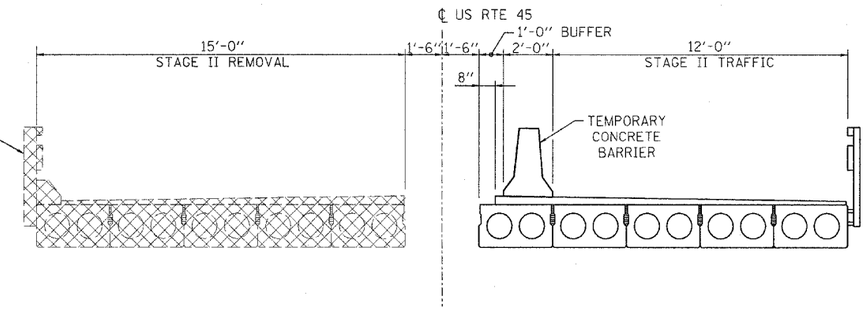

STAGE II REMOVAL

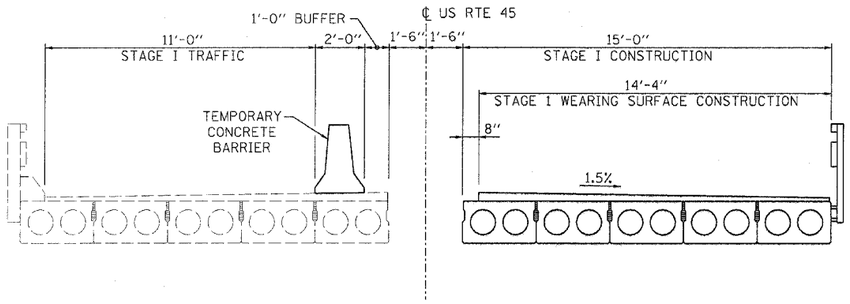

STAGE I CONSTRUCTION

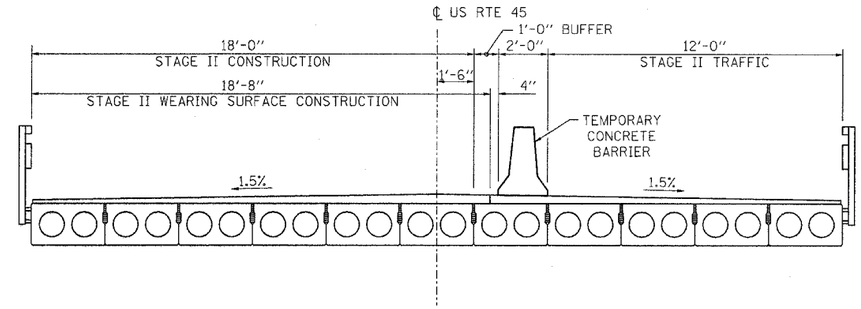

STAGE II CONSTRUCTION

REVISIONS	
NAME	DATE

ILLINOIS DEPARTMENT OF TRANSPORTATION

STAGING CROSS SECTIONS

US ROUTE 45
OVER ENDSLEY CREEK

SCALE: VERT. NONE
HORIZ. NONE

DATE 06/20/07

DRAWN BY TJO

CHECKED BY RPJ

PLOT DATE = 3/15/06
FILE NAME = STAGE1_XS_B20.DGN