STATE OF ILLINOIS
DEPARTMENT OF TRANSPORTATION

ROUTE NO.	SECTION	COUNTY	TOTAL SHEETS	SHEET NO.
		Henry	-	8
FED. ROAD DIST. NO. 7		ILLINOIS	FED. AID PROJECT-	

SHEET NO. 4
4 SHEETS

Contract Number: 64D73

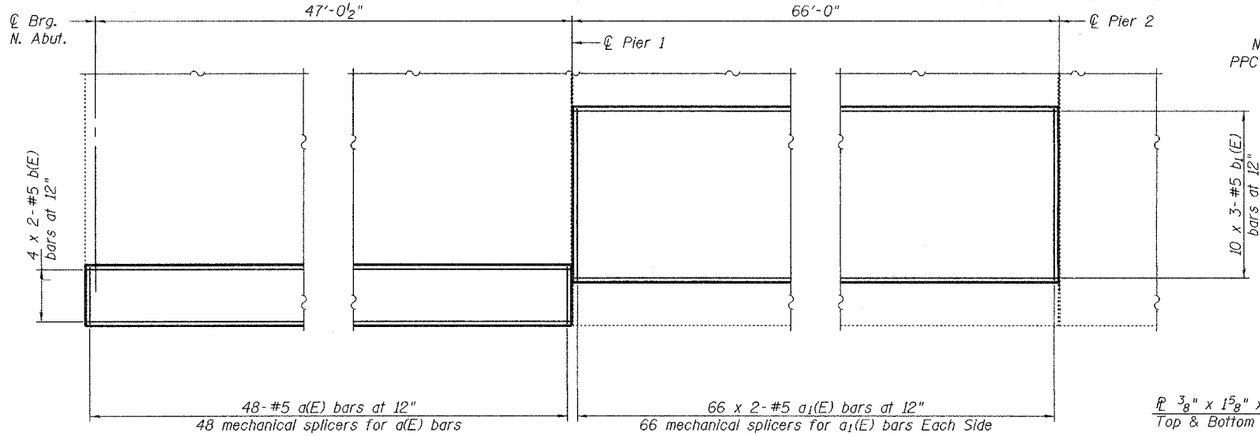

PARTIAL OVERLAY PLAN

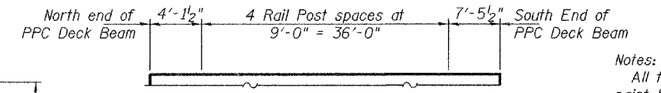

SPAN 1 RAIL POST SPACING

BAR LAP
#5 = 1'-8"

Notes:

All field drilled holes shall be coated with an approved zinc rich paint before erection.

For multi-span bridges, sufficient ¼" x 6" x 1'-2" galvanized steel shims shall be provided to align rail between adjacent spans. Cost included with Removing and Re-erecting Existing Rail.

All steel rail members shall be galvanized according to Article 509.05 of the Standard Specifications.

*** The studs of the anchor devices shall be placed below the top reinforcement bars and the outermost longitudinal reinforcement bar shall be placed directly above the studs of the rail post anchor device.

The cost of anchor device is included with the cost of deck beams.

This work will be paid for at the contract unit price per foot for Removing and Re-erecting Existing Railing, which price shall include removal, temporary storage, re-erection, shims and all new hardware required to satisfactorily complete the work.

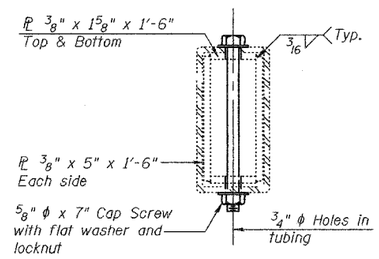

SECTION AT RAIL SPLICE

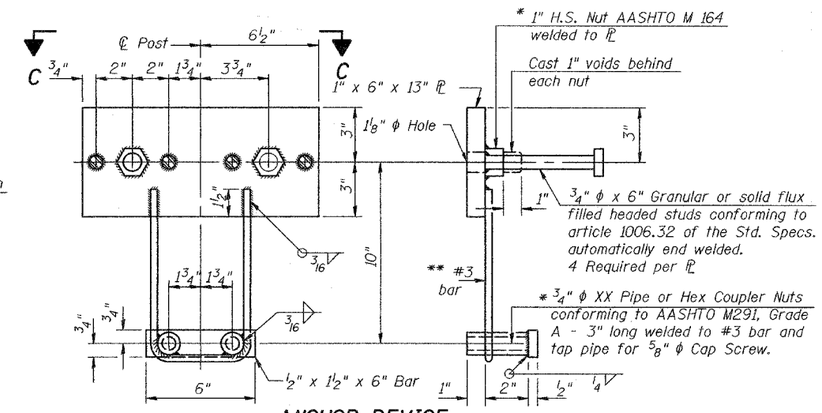

ANCHOR DEVICE

* Threaded areas shall be plugged or blocked off during casting of beam.

** Whenever the lower insert assemblies interfere with strand locations, the #3 bars shall be cut and adjusted in order to allow raising or lowering of the lower inserts. Maximum adjustment not to exceed ½".

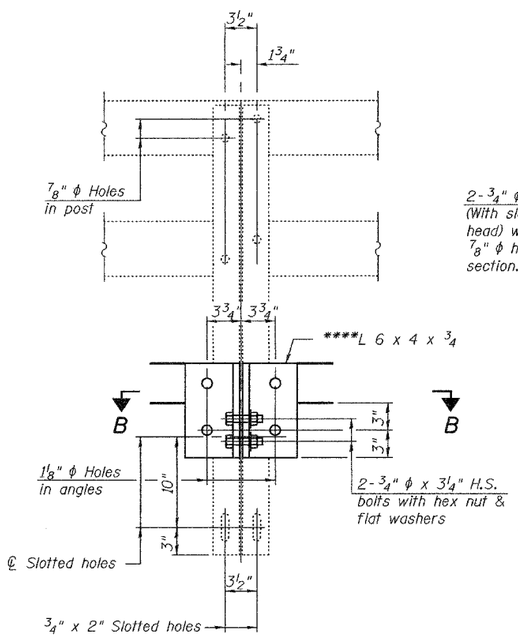

SECTION A-A

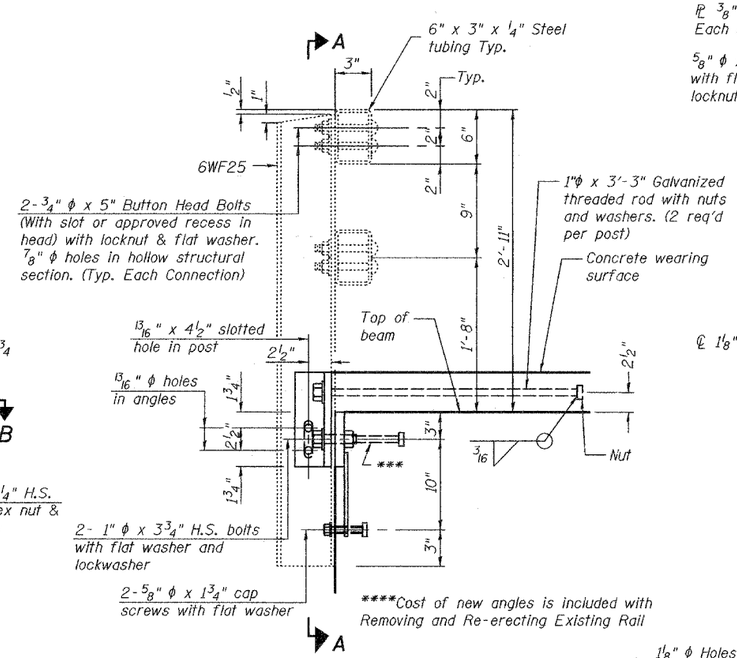

SECTION AT RAIL POST

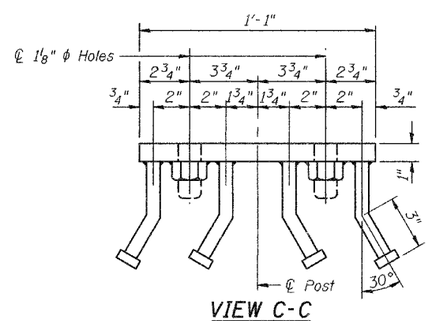

VIEW C-C

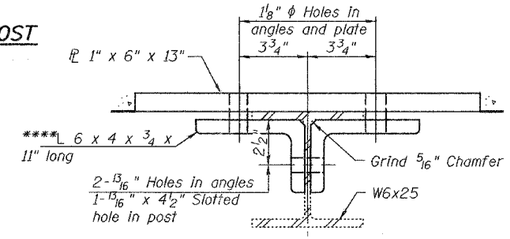

SECTION B-B

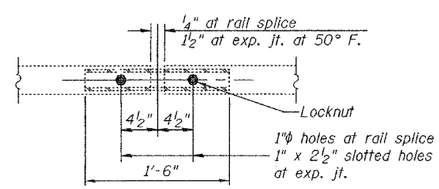

TYPICAL PLAN SPLICE PL

BILL OF MATERIAL

Bar	No.	Size	Length	Shape
a(E)	48	#5	3'-3"	———
a1(E)	112	#5	6'-0"	———
b(E)	8	#5	24'-8"	———
b1(E)	30	#5	23'-1"	———
Mechanical Splicers			Each	180
Concrete Removal			Cu. Yd.	4.4
Concrete Wearing Surface 5"			Sq. Yd.	92
Reinforcement Bars, Epoxy Coated			Lbs.	1,790
Removing and Re-erecting Existing Railing			Foot	48

Bars indicated thus 1 x 2-#5 etc. indicates 1 line of bars with 2 lengths per line.

RAIL DETAILS
S.B.I. RT. 82
HENRY COUNTY
SN 037-0071

DESIGNED	A.T.H.
CHECKED	A.J.B.
DRAWN	Drew Christopher
CHECKED	A.T.H. A.J.B.

June 21, 2007
EXAMINED A. Carl Perry — REPAIR PLANS UNIT CHIEF
PASSED Ralph E. Anderson — ENGINEER OF BRIDGES AND STRUCTURES

SLT-92-001-07

...\archived\037D071.dgn 6/29/2007 9:00:40 AM