F.A.P. RTE.	SECTION	COUNTY	TOTAL SHEETS	SHEET NO.
335	119R-2	LAKE	439	252
STA. 432+83.12		TO STA. 470+56.84		
FED. ROAD DIST. NO.	ILLINOIS	FED. AID PROJECT		

60B01

When "A" is 3'-6" or less, the temporary concrete barrier shall be anchored to the new slab according to Detail I or Detail II. No anchorage is required when "A" is greater than 3'-6".

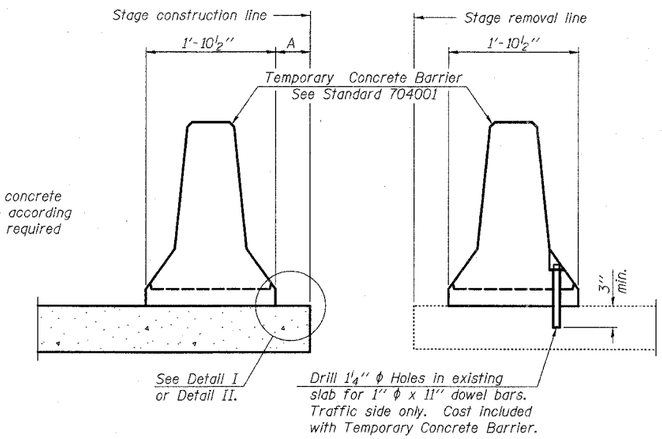

NEW SLAB

EXISTING SLAB

SECTIONS THRU SLAB

NOTES

Detail I - With Bar Splicer or Couplers:
Connect one (1) 1"x7"x10" steel ℙ to the top layer of couplers with 2-⅝" ϕ bolts screwed to coupler at approximate ℄ of each barrier panel.

Detail II - With Extended Reinforcement Bars:
Connect one (1) 1"x7"x10" steel ℙ to the concrete slab with 2-⅝" ϕ Expansion Anchors or cast in place inserts spaced between the top layer of reinforcement at approximate ℄ of each barrier panel.

Cost of anchorage is included with Temporary Concrete Barrier.

The 1" x 7" x 10" plate shall not be removed until stage II construction forms and all reinforcement bars are in place and the concrete is ready to be placed.

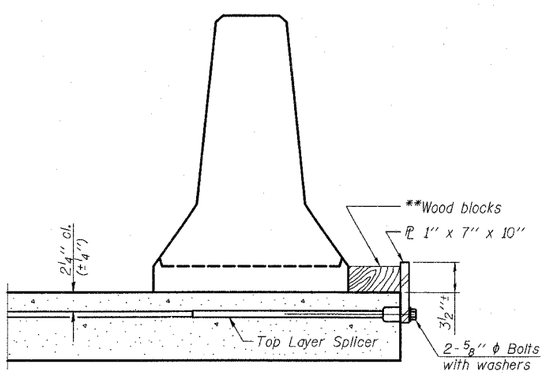

DETAIL I

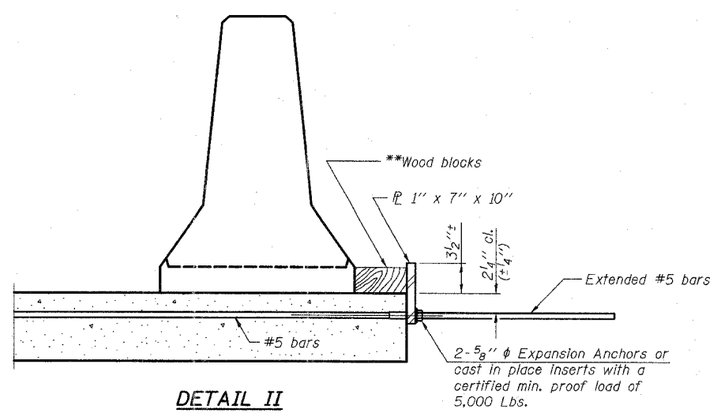

DETAIL II

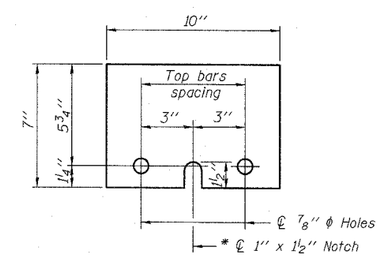

STEEL RETAINER ℙ 1" x 7" x 10"

* Required only with Detail II

** Wood blocks may be omitted when required to provide minimum stage traffic lane width. When the wood blocks are omitted, the concrete barrier shall be in direct contact with the steel retainer plate.

SHEET S-5 OF S-53

REVISIONS	
NAME	DATE

ILLINOIS DEPARTMENT OF TRANSPORTATION

TEMPORARY CONCRETE BARRIER

ILLINOIS 60 OVER I-94
F.A.P. RTE. 335 SECTION 119R-2
LAKE COUNTY STA. 445+54.14
S.N. 049-2012 ISTHA BRIDGE NO. 407

DESIGNED BY: SNB
DRAWN BY: SNB
CHECKED BY: SP

SCALE:
DATE: MAY 8, 2007

T·Y·LIN INTERNATIONAL

p:\60245811-60\structur\final\L60BRtcbr.DGN

05/03/2007 04:30:01 PM