CONTRACT NO. 44924

F.A. RTE.	SECTION	COUNTY	TOTAL SHEETS	SHEET NO.
		POPE	60	23
STA.		TO STA.		
FED. ROAD DIST. NO.	ILLINOIS	FED. AID PROJECT		

IDNR PROJECT NO. 05-06-008

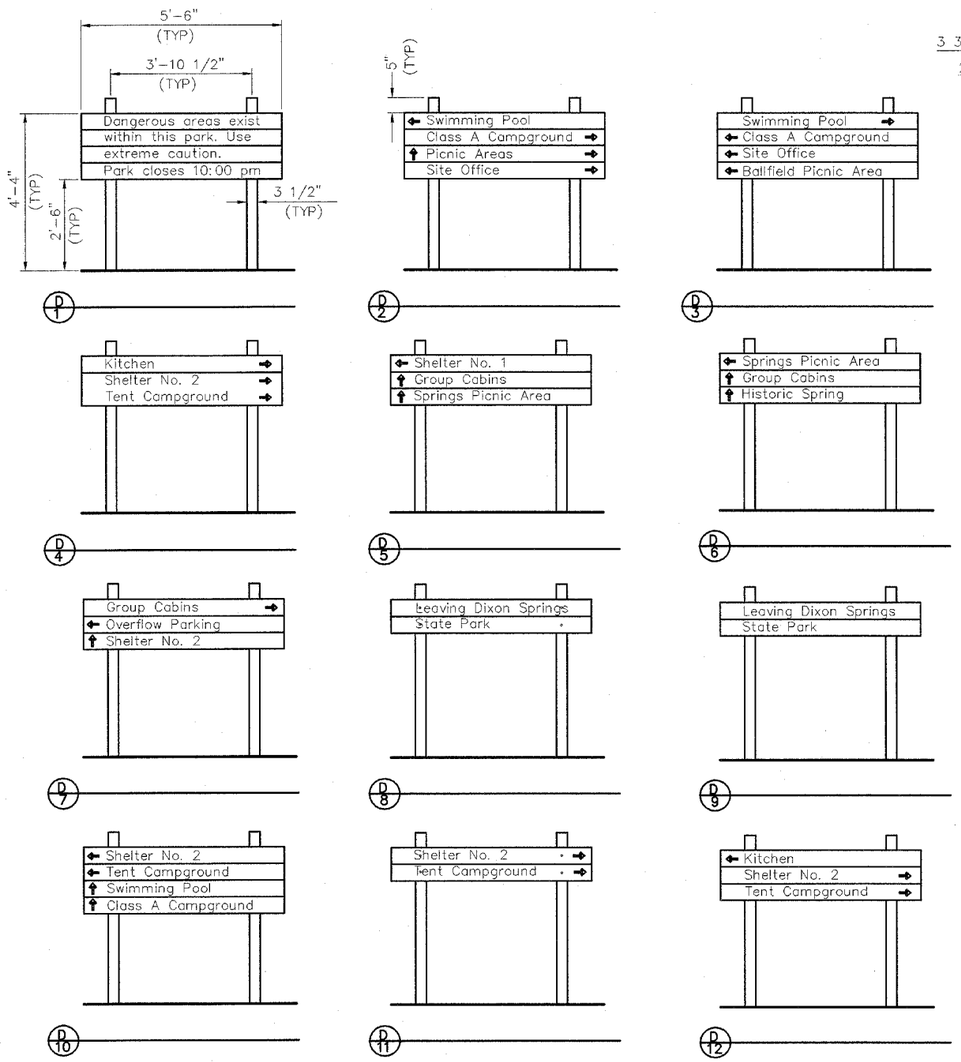

DIXON SPRINGS PARK

DIRECTIONAL SIGNS (LETTERING ON ONE SIDE ONLY)

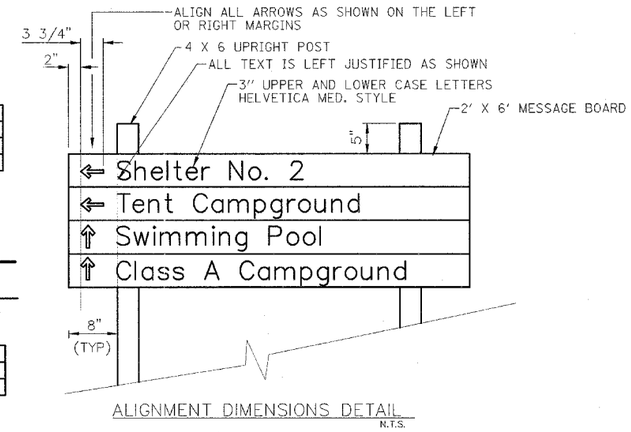

ALIGNMENT DIMENSIONS DETAIL

N.T.S.

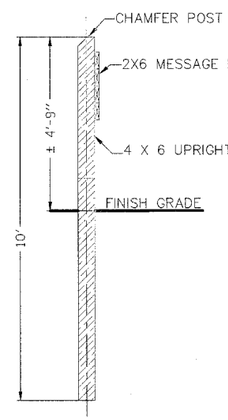

SECT. A-A

SIGN GENERAL NOTES:

1. ALL LUMBER IS STRUCTURAL RECYCLED PLASTIC, BROWN IN COLOR BY BEDFORD TECHNOLOGY OR APPROVED EQUAL. SUBMIT SAMPLES TO IDNR LANDSCAPE ARCHITECT FOR COLOR SELECTION PRIOR TO FABRICATION.
2. MOUNTING HARDWARE IS TO BE FASTENMASTER LEDGERLOK NO. 261 SCREW × 5" LONG - 2 PER 2"×6" SIGN FACE BOARD. ALL EXPOSED HARDWARE ON SIGN FACES IS TO BE COUNTERSUNK AND PAINTED TO MATCH LUMBER COLOR.
3. FOOTINGS ARE NOT SHOWN. THE UPRIGHT POSTS ARE TO BE INSTALLED PER ARTICLE 730.04 OF THE STANDARD SPECIFICATIONS FOR ROAD & BRIDGE CONSTRUCTION IN ILLINOIS, JANUARY 1, 2007. HOLE DIAMETER IS TO BE 10"
4. ALL LETTERING IS ALIGNED ON THE SIGN'S LEFT MARGIN AS SHOWN. LETTER STYLE IS UPPER AND LOWER CASE HELVETICA MEDIUM STYLE. LETTERS ARE TO BE ENGRAVED WITH A COMPUTER OR TEMPLATE DRIVEN ROUTER SYSTEM. PAINT LETTERS WITH A WHITE, EPOXY PAINT MIXED WITH GLASS BEADS.
5. IF POST IS INTO ROCK, EXCAVATION WILL BE PAID FOR AS ROCK EXCAVATION. CORE DRILLING ROCK FOR POST INSTALLATION WILL BE PAID FOR AS ROCK EXCAVATION.

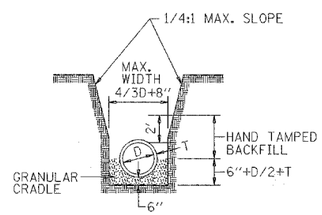

PIPE BEDDING & EXCAVATION DETAIL

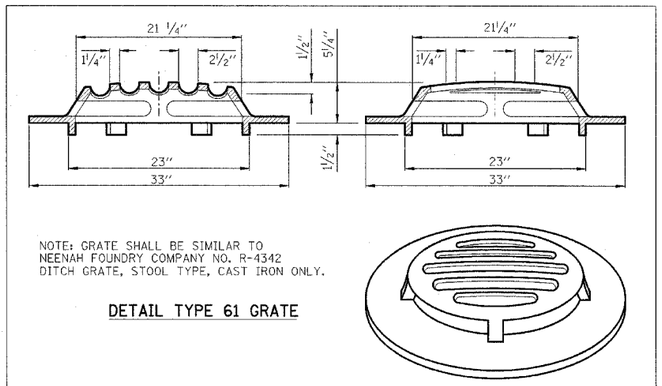

NOTE: GRATE SHALL BE SIMILAR TO NEENAH FOUNDRY COMPANY NO. R-4342 DITCH GRATE, STOOL TYPE, CAST IRON ONLY.

DETAIL TYPE 61 GRATE

REVISIONS	
NAME	DATE
SIGN GENERAL NOTES	5/30/07

ILLINOIS DEPARTMENT OF TRANSPORTATION

TRAFFIC AND INFORMATIONAL SIGN DETAILS

IDOT / IDNR
DIXON SPRINGS STATE PARK

SCALE: VERT. HORIZ.
DATE: 12/08/06
DRAWN BY: DRR
CHECKED BY: RGD

FARNSWORTH GROUP, INC.

CONSULTING ENGINEERS - BLOOMINGTON, ILLINOIS

24-7772