85761

08-02-2024 LETTING ITEM 063

F.A.S. RTE.	SECTION	COUNTY	TOTAL SHEETS	SHEET NO.
1084	20-00102-00-PV	CARROLL	217	1
	FAIRHAVEN/WYSOX TWP ILLINOIS			

LOCATED IN CARROLL COUNTY, SECTIONS 22,23, & 24 OF T23N R5E, & SECTIONS 19, 20, & 21 OF T23N R6E, THE PROPOSED IMPROVEMENT INLCUDES THE RECONSTRUCTION OF 4.5 MILES OF C.H. 8 (IDEAL ROAD), INCLUDING WIDENING OF EXISTING BASE, 8" CEMENT STABILIZATION OF BASE, NEW 4" HMA SURFACE. ALL CULVERTS ARE TO BE REPLACED AND ONE BRIDGE IS TO BE OMITTED.

FOR INDEX OF SHEETS, SEE SHEET 2

FOR HIGHWAY STANDARDS, SEE SHEET 2

STATE OF ILLINOIS

PLAN FOR HIGHWAY IMPROVEMENT

IDEAL ROAD RECONSTRUCTION
FAS 1084 CO HWY 8 (MORRISON ROAD TO DUTCHTOWN ROAD)
CARROLL COUNTY
FAIRHAVEN / WYSOX TOWNSHIP
SECTION 20-00102-00-PV
PROJECT NO. OMNE(308)
JOB NO. C-92-037-20

FUNCTIONAL CLASSIFICATION - COLLECTOR
2044 ADT = 750; 14% TRUCKS
DESIGN SPEED = 50 MPH

COUNTY ENGINEER

SARA RENKES, P.E.
CORROLL COUNTY HIGHWAY DEPARTMENT,
10735 MILL ROAD,
Mt. CARROLL, IL, 61053,
PHONE : (815) 244-3195

UTILITIES

JO-CARROLL ENERGY
(800) 858-5522
www.jocarroll.com

NICOR GAS
(888) 388-2362
www.nicorgas.com

MEDIACOM
(800) 379-7412
www.mediacom.com

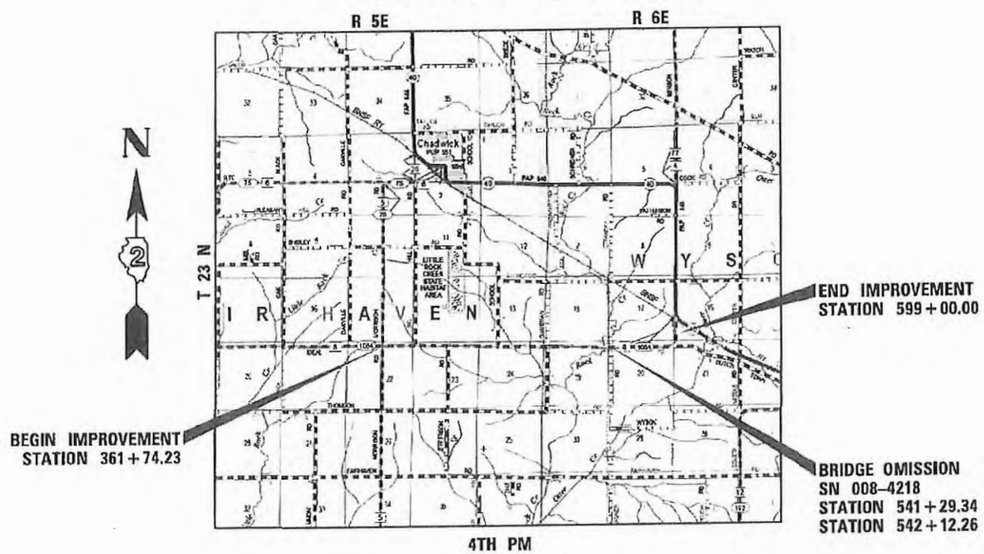

LOCATION MAP

TOTAL LENGTH = 23,725.77 FT. = 4.49 MILE
NET LENGTH = 23,642.85 FT. = 4.48 MILE

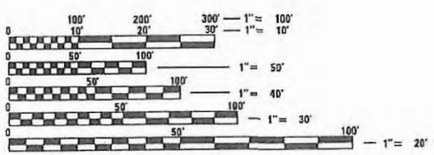

FULL SIZE PLANS HAVE BEEN PREPARED USING STANDARD ENGINEERING SCALES. REDUCED SIZED PLANS WILL NOT CONFORM TO STANDARD SCALES. IN MAKING MEASUREMENTS ON REDUCED PLANS, THE ABOVE SCALES MAY BE USED.

J.U.L.I.E.
JOINT UTILITY LOCATING INFORMATION FOR EXCAVATORS
1-800-892-0123
OR 811

CONTRACT No. 85761
HLC PROJECT No. 07997.00

LICENSED PROFESSIONAL ENGINEER
THOMAS W. OKITE
062-053584
4/17/2024
THOMAS W. OKITE, P.E. DATE
LICENSE EXPIRES NOV. 30, 2024

CHASTAIN & ASSOCIATES LLC
CONSULTING ENGINEERS
DECATUR (217) 422-8544
SCHAUMBURG (773) 714-0050
ROCKFORD (815) 489-0050
184-001397

APPROVED 4/17 20 24
SR
COUNTY ENGINEER

PASSED JUNE 17 20 24
DISTRICT TWO ENGINEER OF LOCAL ROADS AND STREETS

Releasing For Bid Based on Limited Review 6/17 20 24
DEPUTY DIRECTOR OF HIGHWAYS REGION TWO ENGINEER

STATE OF ILLINOIS
DEPARTMENT OF TRANSPORTATION

INDEX OF SHEETS

COMMITMENTS

NO COMMITMENTS

HIGHWAY STANDARDS

SHEET NO.	DESCRIPTION
000001-08	STANDARD SYMBOLS, ABBREVIATIONS AND PATTERNS
280001-07	TEMPORARY EROSION CONTROL SYSTEMS
482001-02	HMA SHOULDER ADJACENT TO FLEXIBLE PAVEMENT
542301-03	PRECAST REINFORCED CONCRETE FLARED END SECTION
542401-04	METAL FLARED END SECTIONS FOR PIPE CULVERTS
606201-04	TYPE B GUTTER (INLET, OUTLET & ENTRANCE)
606401-02	PAVED DITCH
630001-13	STEEL PLATE BEAM GUARDRAIL
630301-09	SHOULDER WIDENING FOR TYPE 1 (SPECIAL) GUARDRAIL TERMINALS
635001-02	DELINEATORS
701006-05	OFF-ROAD OPERATIONS, 2L, 2W, 15' TO 24" FROM PAVEMENT EDGE
701201-05	LANE CLOSURE, 2L, 2W, DAY ONLY FOR SPEED ≥ 45 MPH
701311-03	LANE CLOSURE, 2L, 2W, MOVING OPERATIONS - DAY ONLY
701326-04	LANE CLOSURE, 2L, 2W, PAVEMENT WIDENING, FOR SPEEDS ≥ 45 MPH
701901-09	TRAFFIC CONTROL DEVICES
720001-01	SIGN PANEL MOUNTING DETAILS
720006-04	SIGN PANEL ERECTION DETAILS
725001-01	OBJECT AND TERMINAL MARKERS
728001-01	TELESCOPING STEEL SIGN SUPPORT
729001-01	APPLICATIONS OF TYPES A & B METAL POSTS (FOR SIGNS & MARKERS)
780001-05	TYPICAL PAVEMENT MARKINGS
782006-01	GUARDRAIL AND BARRIER WALL REFLECTOR MOUNTING DETAILS
BLR 27-1	TRAFFIC BARRIER TERMINAL TYPE 5A

GENERAL NOTES

1. THE CONTRACTOR SHALL NOTIFY TRAFFIC OPERATIONS AT A MINIMUM OF 5 WORKING DAYS PRIOR TO PLACING PERMANENT PAVEMENT MARKING OR SIGNING.

2. THE CONTRACTOR SHALL SEED ALL DISTURBED AREAS WITHIN THE PROJECT LIMITS. SEEDING CLASS 4 OR 2A SHALL BE USED, EXCEPT IN FRONT OF PROPERTIES WHERE THE GRASS WILL BE MOWED, THEN USE SEEDING, CLASS 1A. CLASS 2A SHALL BE USED ON FRONT SLOPES AND DITCH BOTTOMS. CLASS 4 SHALL BE USED BEHIND TYPE A GUTTER, ON ALL BACKSLOPES AND AREAS BEHIND THE BACKSLOPE, AND BEYOND THE TOE OF FRONT SLOPE ON FILL SECTIONS WITHOUT DITCHES.

3. PLACEMENT AND COMPACTION OF THE BACKFILL FOR THE PROPOSED ACROSS ROAD CULVERTS AND EXISTING ACROSS ROAD CULVERTS THAT ARE REMOVED, SHALL CONFORM TO ARTICLE 502.10 OF THE STANDARD SPECIFICATIONS, EXCEPT THAT THE MATERIAL, EITHER PRODUCTION AGGREGATE OR EXCAVATED MATERIAL, SHALL CONFORM TO ARTICLE 208.02 OF THE STANDARD SPECIFICATIONS, AND SHALL BE COMPACTED TO A MINIMUM OF 95% OF THE STANDARD LABORATORY DENSITY. THE TOP ONE FOOT OF TRENCH BACKFILL SHALL BE GRADATION CA06 OR CA10, BENEATH THE PROPOSED PAVEMENT/PATCH.

   THE ENTIRE EXCAVATION, WITHIN 2 FEET OUTSIDE OF EACH SHOULDER, SHALL BE BACKFILLED WITH TRENCH BACKFILL MATERIAL TO THE BOTTOM OF THE PROPOSED PAVEMENT/PATCH. IMPERVIOUS MATERIAL SHALL BE USED ON THE OUTER 3 FEET AT EACH END OF THE CULVERT.

   THE TRENCH BACKFILL MATERIAL WILL BE MEASURED FOR PAYMENT IN ACCORDANCE WITH ARTICLE 502.12, NOT TO EXCEED 2 FEET OUTSIDE THE STRUCTURE.

4. THE EXISTING HOT-MIX ASPHALT ON PRIVATE AND COMMERCIAL ENTRANCES SHALL BE BLADED OFF OR MILLED AND DISPOSED OF OUTSIDE THE PROJECT LIMITS. THE COST OF THE BLADING, MILLING, ROLLING, AND DISPOSAL IS INCLUDED IN THE CONTRACT UNIT PRICE FOR INCIDENTAL HOT-MIX ASPHALT SURFACING.

5. THE DROP OFF THAT OCCURS AT ENTRANCE EDGES AS A RESULT OF RESURFACING OF THE ENTRANCE SHALL BE CORRECTED USING AGGREGATE SHOULDER MATERIAL. THIS WORK SHALL BE PAID FOR BY THE SQ YD FOR AGGREGATE SHOULDERS OF THE TYPE SPECIFIED IN THE PLANS.

6. THE CONTRACTOR WILL BE REQUIRED TO FURNISH 5 ½" HIGH BRASS STENCILS AS APPROVED BY THE ENGINEER AND INSTALL STATIONING AT 250' INTERVALS. STATIONING SHALL BE PLACED ON BOTH LANES OF 2 LANE HIGHWAYS AND ON THE OUTSIDE LANES IN BOTH DIRECTIONS ON 4-LANE HIGHWAYS. THE STATIONS SHALL BE PLACED 6" INSIDE THE PAVEMENT MARKING EDGE SO THEY CAN BE READ FROM THE SHOULDER. THIS WORK WILL BE INCLUDED IN THE COST OF THE FINAL PAVEMENT SURFACE.

7. THE AREA TO BE TACKED OR PRIMED SHALL BE LIMITED TO THAT WHICH CAN BE COVERED WITH HMA ON THE NEXT DAY'S PRODUCTION, BUT NO MORE THAN FIVE DAYS IN ADVANCE OF THE PLACEMENT OF THE HMA, UNLESS APPROVED BY THE ENGINEER.

8. TO HELP AVOID EXCESS DROP OFFS AT THE EDGE OF PAVEMENT, AGGREGATE SHOULDER MATERIAL OF THE TYPE SPECIFIED IN THE PLANS SHALL BE PLACED PRIOR TO ANY BITUMINOUS MATERIAL. THE AGGREGATE MATERIAL SHALL BE PLACED FLUSH WITH THE EXISTING PAVEMENT OR AT THE ELEVATION OF ANY PROPOSED MILLING. AT NO TIME SHALL THE AGGREGATE SHOULDER MATERIAL BE HIGHER THAN THE EXISTING EDGE OF PAVEMENT. THIS WORK SHALL BE PAID FOR BY THE SQ YD FOR AGGREGATE SHOULDERS OF TYPE SPECIFIED.

9. ON FULL DEPTH PAVEMENT, SHOULDER WIDTHS OF 6 FT. OR LESS MAY BE PLACED, AT THE CONTRACTOR'S OPTION, SIMULTANEOUSLY WITH THE ADJACENT TRAFFIC LANE FOR BOTH THE BINDER AND SURFACE COURSES, PROVIDED THE CROSS SLOPE OF BOTH THE PAVEMENT AND SHOULDER CAN BE SATISFACTORILY OBTAINED. THE SHOULDER WILL BE PAID FOR AT THE CONTRACT UNIT PRICE PER SQUARE YARD FOR HOT-MIX ASPHALT SHOULDERS OF THE THICKNESS SPECIFIED ON THE PLANS.

10. THE BORING LOGS FOR THESE STRUCTURES INDICATE THAT GROUNDWATER LEVELS MAY ENCROACH ON THE CONSTRUCTION LIMITS OF THESE CULVERTS. IT SHALL BE THE RESPONSIBILITY OF THE CONTRACTOR TO CONTROL THE GROUND WATER AND DIVERT THE STREAM FLOW DURING CONSTRUCTION IN ORDER TO KEEP THE CONSTRUCTION AREA FREE OF WATER. THE METHOD OF CONTROLLING THE WATER SHALL BE SUBJECT TO APPROVAL OF THE ENGINEER AND THE COST SHALL BE INCLUDED IN THE CONTRACT UNIT PRICE FOR PRECAST CONCRETE BOX CULVERTS.

11. CULVERT & BRIDGE FLOWS MUST BE MAINTAINED THROUGHOUT THE PROJECT. NORMAL FLOW SHALL BE ALLOWED TO PASS AT THE RATE IT ENTERS THE JOBSITE. HIGH FLOWS SHALL BE ALLOWED TO PASS WITHOUT CAUSING DAMAGE TO UPSTREAM PROPERTIES.

12. BOX CULVERTS THAT ARE STAGE CONSTRUCTED AND UNDERCUT BY MORE THAN 2 FEET SHALL HAVE LEAN CONCRETE PLACED ON THE ROCK FILL AT THE STAGE LINE. THE CONCRETE SHALL RETAIN THE ROCK FILL UNTIL THE SECOND STAGE ROCK FILL IS PLACED. THIS WORK WILL BE INCLUDED IN THE PAY ITEM FOR THE TYPE OF ROCK FILL USED.

13. A PRECAST BOX CULVERT IS NOT AN OPTION ON THE PROJECT DUE TO SOIL CONDITIONS.

14. THE EXCAVATED MATERIALS FROM EARTH EXCAVATION WIDENING, GRADING AND SHAPING DITCHES, AND EXCAVATING AND GRADING SHOULDERS SHALL BE USED TO BUILD UP THE SHOULDER THROUGHOUT THE JOB TO CONFORM WITH THE TYPICAL SECTIONS AND SHOULDER WIDENING FOR TERMINALS AS SHOWN ON THE PLANS.

15. THE CONTRACTOR SHALL SUPPLY THE RESIDENT ENGINEER WITH THE MANUFACTURER'S INSTALLATION REQUIREMENTS FOR THE TYPE OF STEEL PLATE BEAM GUARDRAIL TERMINAL TYPE 1 SPECIAL (TANGENT) OR STEEL PLATE BEAM GUARDRAIL TERMINAL TYPE I SPECIAL (FLARED).

16. DELINEATORS SHALL BE PLACED AT THE END OF APPROACH GUARDRAIL TERMINAL SECTIONS, AND AT EACH HEADWALL OR END SECTION OF ACROSS ROAD CULVERTS. THE POST SHALL BE ROTATED 180° FROM WHAT IS SHOWN IN STANDARD 635001, EXCEPT THAT ONLY METAL-BACKED DELINEATORS SHALL BE PERMITTED. THIS SHALL BE PAID FOR AT THE CONTRACT UNIT PRICE EACH FOR DELINEATORS.

17. PAVEMENT MARKING SHALL BE DONE ACCORDING TO STANDARD 780001, EXCEPT AS FOLLOWS:
    1. ALL WORDS, SUCH AS ONLY, SHALL BE 8 FEET HIGH.
    2. ALL NON-FREEWAY ARROWS SHALL BE THE LARGE SIZE.
    3. THE DISTANCE BETWEEN YELLOW NO-PASSING LINE SHALL BE 8 INCHES, NOT 7 INCHES, AS SHOWN IN THE DETAILS OF TYPICAL LANE AND EDGE LINE.
    4. CENTERLINE SKIP DASH PAVEMENT MARKING ON MULTI-LANE DIVIDED, MULTI-LANE UNDIVIDED, AND ONE-WAY ROADWAY SHALL BE ACCORDING TO DISTRICT STANDARD 41.1.

18. THIS PROJECT CONTAINS MONUMENTS THAT MAY BE DISTURBED. THE CONTRACTOR MUST NOTIFY THE RESIDENT ENGINEER, ROGER INBODEN, CHIEF OF SURVEYS, AT ROGER.INBODEN@ILLINOIS.GOV, A MINIMUM OF 21 DAYS BEFORE ANY ACTIVITY THAT MAY DISTURB A MONUMENT IN THE PAVEMENT. THIS WOULD INCLUDE SECTION CORNERS, QUARTER CORNERS, WITNESS CORNERS, OR ANYTHING ELSE THAT COULD PERTAIN TO A PROPERTY CORNER THAT WOULD BE IN VIOLATION OF 765 ILCS 205/11.

19. THE CONTRACTOR SHALL BEGIN TEMPORARY FENCE ERECTION AS SOON AS CLEARING AND GRUBING OPERATIONS PERMIT. BEFORE REMOVING EXISTING FENCE FROM AN AREA THAT CONTAINS LIVESTOCK, THE CONTRACTOR SHALL ERECT , ALONG THE PROPOSED RIGHT OF WAY LINES, A TEMPORARY FENCE OR WIRE MEETING THE APPROVAL OF THE ENGINEER. THE CONTRACTOR SHALL CONCENTRATE PERMANENT FENCING OPERATIONS AT THESE LOCATIONS AND AT OTHER LOCATIONS AS DIRECTED BY THE ENGINEER. THE COST OF ARRANGING WORK AS HEREIN SPECIFIED WILL NOT BE PAID FOR AS A SEPARATE ITEM BUT SHALL BE INCLUDED IN THE CONTRACT UNIT PRICE PER FOOT FOR TEMPORARY FENCE.

20. ALL GUTTER OUTLET SHALL BE EXTENDED TO DITCH FLOW AS DIRECTED BY THE ENGINEER.

21. THE FOLLOWING LISTED UTILITIES LOCATED WITHIN THE PROJECT LIMITS OR IMMEDIATELY ADJACENT TO THE PROJECT CONSTRUCTION LIMITS ARE MEMBERS OF JULIE:
    JO-CARROLL ENERGY (800) 858-5522
    NICOR GAS (888) 388-2362
    MEDIACOM (800) 379-7412
    IDOT IS NOT A MEMBER OF JULIE. IF YOU ARE NEAR ANY OVERHEAD LIGHTING, INTERSECTION LIGHTING OR TRAFFIC SIGNALS, CONTACT THE IDOT TRAFFIC OFFICE AT (815)284-5469 AT LEAST 48 HOURS PRIOR TO WORK.

	CODE NO.	ITEM	UNIT	CONSTRUCTION CODE IDEAL ROAD 80% FEDERAL 20% LOCAL ROADWAY 0006 RURAL	ROADWAY 0042 RURAL
	20101000	TEMPORARY FENCE	FOOT	500	
	20200100	EARTH EXCAVATION	CU YD	30,300	
	20201200	REMOVAL AND DISPOSAL OF UNSUITABLE MATERIAL	CU YD	1,515	
	20800150	TRENCH BACKFILL	CU YD	1,439	
	21101615	TOPSOIL FURNISH AND PLACE, 4"	SQ YD	96,762	
*	25000110	SEEDING, CLASS 1A	ACRE	4	
*	25000210	SEEDING, CLASS 2A	ACRE	10	
*	25000310	SEEDING, CLASS 4	ACRE	6	
*	25000400	NITROGEN FERTILIZER NUTRIENT	POUND	1,800	
*	25000500	PHOSPHORUS FERTILIZER NUTRIENT	POUND	1,800	
*	25000600	POTASSIUM FERTILIZER NUTRIENT	POUND	1,800	
*	25100630	EROSION CONTROL BLANKET	SQ YD	96,762	
	28000250	TEMPORARY EROSION CONTROL SEEDING	POUND	2,000	
	28000305	TEMPORARY DITCH CHECKS	FOOT	442	
	28000400	PERIMETER EROSION BARRIER	FOOT	27,016	
	28000500	INLET AND PIPE PROTECTION	EACH	20	
	28001100	TEMPORARY EROSION CONTROL BLANKET	SQ YD	1,000	
	28100107	STONE RIPRAP, CLASS A4	SQ YD	199	
	28100109	STONE RIPRAP, CLASS A5	SQ YD	564	
	28200200	FILTER FABRIC	SQ YD	763	
	31101600	SUBBASE GRANULAR MATERIAL, TYPE B 8"	SQ YD	18,175	
	35101800	AGGREGATE BASE COURSE, TYPE B 6"	SQ YD	880	
	35102000	AGGREGATE BASE COURSE, TYPE B 8"	SQ YD	4,452	
	35102400	AGGREGATE BASE COURSE, TYPE B 12"	SQ YD	7,308	

* SPECIALTY ITEMS

MODEL: SHT_PLAN1
FILE NAME: R:\PI_County\7997 Carroll County - Ideal Road Reconstruction\CADD\CADD_Civil\Sheets\7997-Sht_500.dgn

CHASTAIN & ASSOCIATES LLC
CONSULTING ENGINEERS

USER NAME = dwozniarski	DESIGNED -	REVISED -
	DRAWN -	REVISED -
PLOT SCALE = 0.16666633 ' / in.	CHECKED -	REVISED -
PLOT DATE = 6/14/2024	DATE - 04/17/2024	REVISED -

STATE OF ILLINOIS
DEPARTMENT OF TRANSPORTATION

IDEAL ROAD RECONSTRUCTION
SUMMARY OF QUANTITIES

SCALE: | SHEET 1 OF 5 SHEETS | STA. | TO STA.

F.A.S. RTE.	SECTION	COUNTY	TOTAL SHEETS	SHEET NO.
1084	20-00102-00-PV	CARROLL	217	3

CONTRACT NO. 85761

ILLINOIS | FED. AID PROJECT

CODE NO.	ITEM	UNIT	CONSTRUCTION CODE IDEAL ROAD 80% FEDERAL 20% LOCAL ROADWAY 0006 RURAL	ROADWAY 0042 RURAL
35200500	CEMENT	100 WT	44,700	
40600275	BITUMINOUS MATERIAL (PRIME COAT)	POUND	151,915	
40600290	BITUMINOUS MATERIALS (TACK COAT)	POUND	15,191	
40600370	LONGITUDINAL JOINT SEALANT	FOOT	23,643	
40603080	HOT-MIX ASPHALT BINDER COURSE, IL-19.0, N50	TON	9,373	
40604060	HOT-MIX ASPHALT SURFACE COURSE, IL-9.5, MIX "D", N50	TON	5,622	
40800025	BITUMINOUS MATERIALS (PRIME COAT)	POUND	2,784	
40800050	INCIDENTAL HOT-MIX ASPHALT SURFACING	TON	156	
42300300	PORTLAND CEMENT CONCRETE DRIVEWAY PAVEMENT, 7 INCH	SQ YD	89	
44000100	PAVEMENT REMOVAL	SQ YD	6,864	
44000200	DRIVEWAY PAVEMENT REMOVAL	SQ YD	590	
44000400	GUTTER REMOVAL	FOOT	1,445	
48101498	AGGREGATE SHOULDERS, TYPE B 4"	SQ YD	26,060	
48203013	HOT-MIX ASPHALT SHOULDERS, 4"	SQ YD	572	
50100300	REMOVAL OF EXISTING STRUCTURES NO. 1	EACH	1	
50100400	REMOVAL OF EXISTING STRUCTURES NO. 2	EACH	1	
50100500	REMOVAL OF EXISTING STRUCTURES NO. 3	EACH	1	
50100600	REMOVAL OF EXISTING STRUCTURES NO. 4	EACH	1	
50100700	REMOVAL OF EXISTING STRUCTURES NO. 5	EACH	1	
50100800	REMOVAL OF EXISTING STRUCTURES NO. 6	EACH	1	
50105220	PIPE CULVERT REMOVAL	FOOT	2,128	
50800105	REINFORCEMENT BARS	POUND	106,563	
50800205	REINFORCEMENT BARS, EPOXY COATED	POUND	3,890	
54003000	CONCRETE BOX CULVERTS	CU YD	512	

* SPECIALTY ITEMS

MODEL: SHT_PLAN2
FILE NAME: R:\PI_County\7997 Carroll County - Ideal Road Reconstruction\CADD\CADD_Civil\Sheets\7997-Sht_SOQ.dgn

CHASTAIN & ASSOCIATES LLC
CONSULTING ENGINEERS

USER NAME = dwozniarski	DESIGNED -	REVISED -
	DRAWN -	REVISED -
PLOT SCALE = 0.16666633 ' / in.	CHECKED -	REVISED -
PLOT DATE = 6/14/2024	DATE - 04/17/2024	REVISED -

STATE OF ILLINOIS
DEPARTMENT OF TRANSPORTATION

IDEAL ROAD RECONSTRUCTION
SUMMARY OF QUANTITIES

SCALE: | SHEET 2 OF 5 SHEETS | STA. | TO STA.

F.A.S. RTE.	SECTION	COUNTY	TOTAL SHEETS	SHEET NO.
1084	20-00102-00-PV	CARROLL	217	4

CONTRACT NO. 85761

ILLINOIS | FED. AID PROJECT

CODE NO.	ITEM	UNIT	CONSTRUCTION CODE IDEAL ROAD 80% FEDERAL 20% LOCAL ROADWAY 0006 RURAL	ROADWAY 0042 RURAL
54210189	PIPE ELBOW, 24"	EACH	2	
54213663	PRECAST REINFORCED CONCRETE FLARED END SECTIONS 18"	EACH	4	
54213669	PRECAST REINFORCED CONCRETE FLARED END SECTIONS 24"	EACH	18	
54213675	PRECAST REINFORCED CONCRETE FLARED END SECTIONS 30"	EACH	1	
54213681	PRECAST REINFORCED CONCRETE FLARED END SECTIONS 36"	EACH	6	
54213687	PRECAST REINFORCED CONCRETE FLARED END SECTIONS 42"	EACH	7	
54213699	PRECAST REINFORCED CONCRETE FLARED END SECTIONS 54"	EACH	1	
54248510	CONCRETE COLLAR	CU YD	1	
54262715	METAL FLARED END SECTIONS 15"	EACH	44	
54262718	METAL FLARED END SECTIONS 18"	EACH	14	
54262724	METAL FLARED END SECTIONS 24"	EACH	4	
54262736	METAL FLARED END SECTIONS 36"	EACH	2	
542A0223	PIPE CULVERTS, CLASS A, TYPE 1 18"	FOOT	135	
542A0229	PIPE CULVERTS, CLASS A, TYPE 1 24"	FOOT	395	
542A0247	PIPE CULVERTS, CLASS A, TYPE 1 42"	FOOT	104	
542A1069	PIPE CULVERTS, CLASS A, TYPE 2 24"	FOOT	69	
542A1075	PIPE CULVERTS, CLASS A, TYPE 2 30"	FOOT	69	
542A1081	PIPE CULVERTS, CLASS A, TYPE 2 36"	FOOT	326	
542A1087	PIPE CULVERTS, CLASS A, TYPE 2 42"	FOOT	148	
542A1099	PIPE CULVERTS, CLASS A, TYPE 2 54"	FOOT	64	
542D0220	PIPE CULVERTS, CLASS D, TYPE 1 15"	FOOT	1,200	
542D0223	PIPE CULVERTS, CLASS D, TYPE 1 18"	FOOT	403	
542D0229	PIPE CULVERTS, CLASS D, TYPE 1 24"	FOOT	128	
542D0241	PIPE CULVERTS, CLASS D, TYPE 1 36"	FOOT	48	

* SPECIALTY ITEMS

	CODE NO.	ITEM	UNIT	CONSTRUCTION CODE IDEAL ROAD 80% FEDERAL 20% LOCAL ROADWAY 0006 RURAL	ROADWAY 0042 RURAL
	60600095	CLASS SI CONCRETE (OUTLET)	CU YD	20	
	60602800	CONCRETE GUTTER, TYPE B	FOOT	1,345	
*	63000003	STEEL PLATE BEAM GUARDRAIL, TYPE A, 9 FOOT POSTS	FOOT	325	
*	63100075	TRAFFIC BARRIER TERMINAL, TYPE 5A	EACH	4	
*	63100167	TRAFFIC BARRIER TERMINAL, TYPE 1 (SPECIAL) TANGENT	EACH	4	
	63200310	GUARDRAIL REMOVAL	FOOT	902	
*	63500105	DELINEATORS	EACH	48	
	67000400	ENGINEER'S FIELD OFFICE, TYPE A	CAL MO	12	
	67100100	MOBILIZATION	L SUM	1	
	70107025	CHANGEABLE MESSAGE SIGN	CAL DA	200	
	70300100	SHORT TERM PAVEMENT MARKING	FOOT	5,926	
	70300150	SHORT TERM PAVEMENT MARKING REMOVAL	SQ FT	1,975	
*	72000100	SIGN PANEL - TYPE 1	SQ FT	140	
*	72000200	SIGN PANEL - TYPE 2	SQ FT	132	
	72400100	REMOVE SIGN PANEL ASSEMBLY - TYPE A	EACH	16	
	72400200	REMOVE SIGN PANEL ASSEMBLY - TYPE B	EACH	13	
*	72501000	TERMINAL MARKER - DIRECT APPLIED	EACH	4	
*	72800100	TELESCOPING STEEL SIGN SUPPORT	FOOT	488	
*	78001110	PAINT PAVEMENT MARKING - LINE 4"	FOOT	78,977	
*	78001180	PAINT PAVEMENT MARKING - LINE 24"	FOOT	12	
*	78200005	GUARDRAIL REFLECTORS, TYPE A	EACH	8	
	Z0013798	CONSTRUCTION LAYOUT	L SUM	1	
	Z0076600	TRAINEES	HOUR	0	1,000
	Z0076604	TRAINEES TRAINING PROGRAM GRADUATE	HOUR	0	1,000

* SPECIALTY ITEMS

MODEL: SHT_PLAN4
FILE NAME: R:\PI_County\7997 Carroll County - Ideal Road Reconstruction\CADD\CADD_Civil\Sheets\7997-Sht_SOQ.dgn

CHASTAIN & ASSOCIATES LLC
CONSULTING ENGINEERS

USER NAME = dwozniarski	DESIGNED -	REVISED -
	DRAWN -	REVISED -
PLOT SCALE = 0.16666633 ' / in.	CHECKED -	REVISED -
PLOT DATE = 6/14/2024	DATE - 04/17/2024	REVISED -

STATE OF ILLINOIS
DEPARTMENT OF TRANSPORTATION

IDEAL ROAD RECONSTRUCTION
SUMMARY OF QUANTITIES

SCALE: | SHEET 4 OF 5 SHEETS | STA. | TO STA.

F.A.S. RTE.	SECTION	COUNTY	TOTAL SHEETS	SHEET NO.
1084	20-00102-00-PV	CARROLL	217	6

CONTRACT NO. 85761

ILLINOIS | FED. AID PROJECT

CODE NO.	ITEM	UNIT	CONSTRUCTION CODE IDEAL ROAD 80% FEDERAL 20% LOCAL ROADWAY 0006 RURAL	ROADWAY 0042 RURAL
X5420201	DROP BOX NO.1	EACH	1	
X5420202	DROP BOX NO.2	EACH	1	
X5420203	DROP BOX NO.3	EACH	1	
X5420204	DROP BOX NO.4	EACH	1	
X5420205	DROP BOX NO.5	EACH	1	
X7010216	TRAFFIC CONTROL AND PROTECTION, (SPECIAL)	L SUM	1	
LR400880	FULL-DEPTH RECLAMATION, 8.0"	SQ YD	68,519	
LR400015	ADD ROCK	SQ YD	68,519	

* SPECIALTY ITEMS

MODEL: SHT_PLAN5
FILE NAME: R:\PI_County\7997 Carroll County - Ideal Road Reconstruction\CADD\CADD_Civil\Sheets\7997-Sht_SOQ.dgn

CHASTAIN & ASSOCIATES LLC
CONSULTING ENGINEERS

USER NAME = dwozniarski	DESIGNED -	REVISED -
	DRAWN -	REVISED -
PLOT SCALE = 0.16666633 ' / in.	CHECKED -	REVISED -
PLOT DATE = 6/14/2024	DATE - 04/17/2024	REVISED -

STATE OF ILLINOIS
DEPARTMENT OF TRANSPORTATION

IDEAL ROAD RECONSTRUCTION
SUMMARY OF QUANTITIES

SCALE: | SHEET 5 OF 5 SHEETS | STA. | TO STA.

F.A.S. RTE.	SECTION	COUNTY	TOTAL SHEETS	SHEET NO.
1084	20-00102-00-PV	CARROLL	217	7

CONTRACT NO. 85761

ILLINOIS | FED. AID PROJECT

85761

THE FOLLOWING MIXTURE REQUIREMENTS ARE APPLICABLE TO THIS PROJECT:

LOCATION AND MIXTURE USE:	MAINLINE AND SHOULDERS	
	SURFACE COURSE	BINDER COURSE
PG:	PG 58-28	PG 58-28
DESIGN AIR VOIDS:	4.0% @ Ndes=50	4.0% @ Ndes=50
MIXTURE COMPOSITION:	IL-9.5	IL-19.0
FRICTION AGGREGATE:	MIXTURE "D"	N/A
QUALITY MANAGEMENT PROGRAM:	QC/QA	QC/QA
SUBLOT SIZE:	N/A	N/A
MATERIAL TRANSFER DEVICE:	N/A	N/A

PLAN QUANTITIES FOR BITUMINOUS CONCRETE SURFACE COURSE ITEMS ARE CALCULATED USING A UNIT WEIGHT OF 112 LBS/SQ YD/INCH

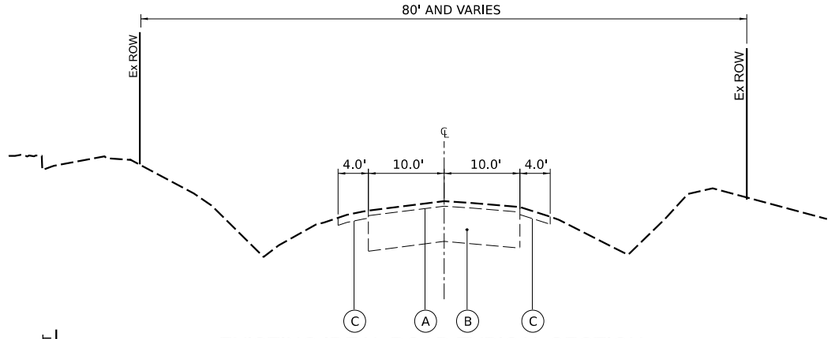

EXISTING IDEAL ROAD TYPICAL SECTION

STA. 361+74.23 - STA. 599+00.00
(BRIDGE OMISSION STA. 541+29.34 - STA. 542+12.26)

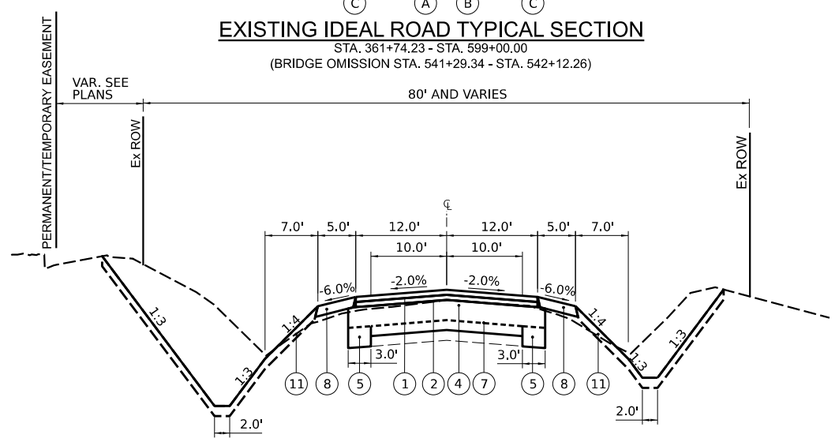

PROPOSED IDEAL ROAD TYPICAL SECTION

STA. 361+74.23 - STA. 405+40
STA. 407+92 - STA. 455+57
STA. 462+27 - STA. 473+00
STA. 475+46 - STA. 514+26
STA. 517+31 - STA. 536+66
STA. 540+64 - STA. 541+29.34
(BRIDGE OMISSION STA. 541+29.34 - STA. 542+12.26)
STA. 542+12.26 - STA. 588+39.89

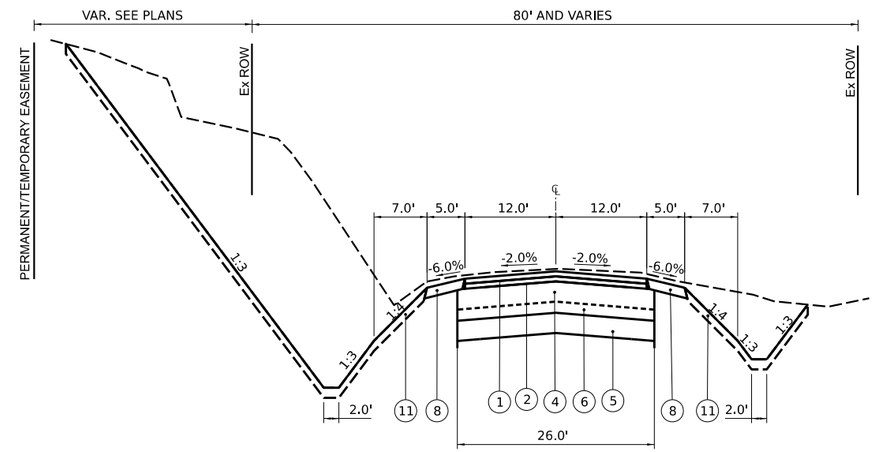

PROPOSED IDEAL ROAD TYPICAL SECTION WITH FULL DEPTH AGGREGATE

STA. 405+40 - STA. 407+92
STA. 455+57 - STA. 462+27

EXISTING LEGEND

- (A) HMA PAVEMENT, VAR. 3" TO 5 1/2"
- (B) AGGREGATE BASE COURSE, VAR. 9 1/2" TO 17 1/2"
- (C) AGGREGATE SHOULDER
- (D) TURF SHOULDER
- (E) SEALCOAT

PROPOSED LEGEND

- (1) HMA SURFACE COURSE, IL-9.5, MIX "D", N50, 1½"
- (2) HMA BINDER COURSE, IL-19.0, N50, 2½"
- (3) CONCRETE GUTTER, TYPE B
- (4) FULL DEPTH RECLAMATION, 8"
- (5) SUBBASE GRANULAR MATERIALS TYPE B1, 8"
- (6) AGGREGATE BASE COURSE, TYPE B, 12"
- (7) ADD ROCK (AS NEEDED)
- (8) AGGREGATE SHOULDER, TYPE B, 4"
- (9) HMA SHOULDER, 4"
- (10) AGGREGATE BASE COURSE, TYPE B, 6"
- (11) TOPSOIL, 4"

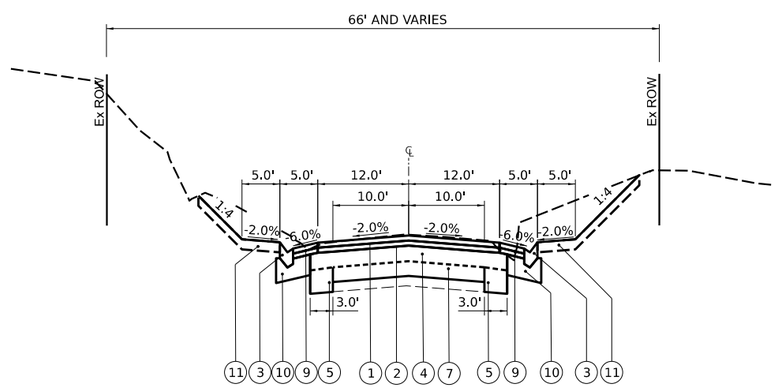

PROPOSED IDEAL ROAD TYPICAL SECTION WITH TYPE B GUTTER

STA. 473+00 - STA. 475+46
STA. 514+26 - STA. 517+31
STA. 536+66 - STA. 540+64

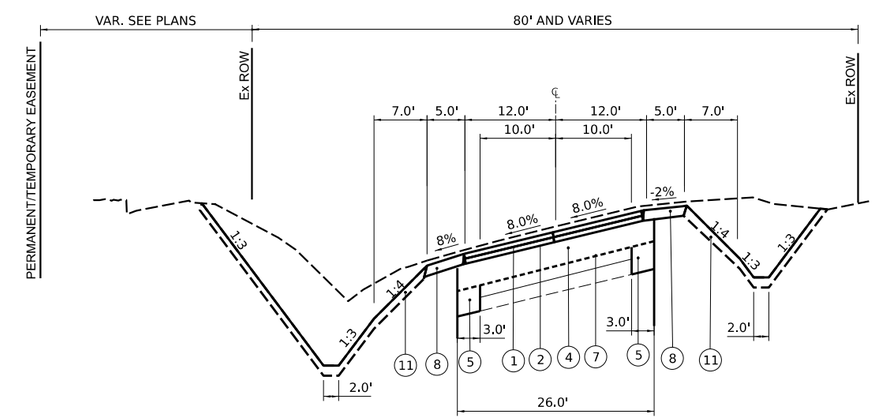

PROPOSED IDEAL ROAD TYPICAL SECTION SUPERELEVATION

STA. 588+39.89 - STA. 599+00.00

MODEL: Default
FILE NAME: R:\PS County\7997 Carroll County - Ideal Road Reconstruction\CADD\CADD_CivilSheets\7997-SHT_Typ Sections.dgn

CHASTAIN & ASSOCIATES LLC CONSULTING ENGINEERS	USER NAME = dwozniarski	DESIGNED -	REVISED -
		DRAWN -	REVISED -
	PLOT SCALE = 19.9992 ' / in.	CHECKED -	REVISED -
	PLOT DATE = 6/14/2024	DATE - 04/17/2024	REVISED -

STATE OF ILLINOIS
DEPARTMENT OF TRANSPORTATION

IDEAL ROAD RECONSTRUCTION
TYPICAL SECTIONS – IDEAL ROAD

SCALE: | SHEET 1 OF 2 SHEETS | STA. TO STA.

F.A.S. RTE.	SECTION	COUNTY	TOTAL SHEETS	SHEET NO.
1084	20-00102-00-PV	CARROLL	217	8
		CONTRACT NO. 85761		
		ILLINOIS	FED. AID PROJECT	

85761

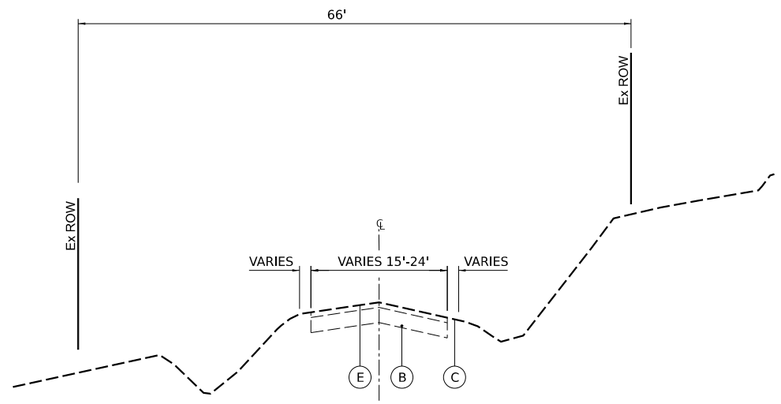

EXISTING TYPICAL SECTION (SEALCOAT SIDE ROAD)

BIG HILL ROAD
JEFFERSON ROAD
SCHOOL ROAD
S. DAMBMAN ROAD
DUTCHTOWN ROAD

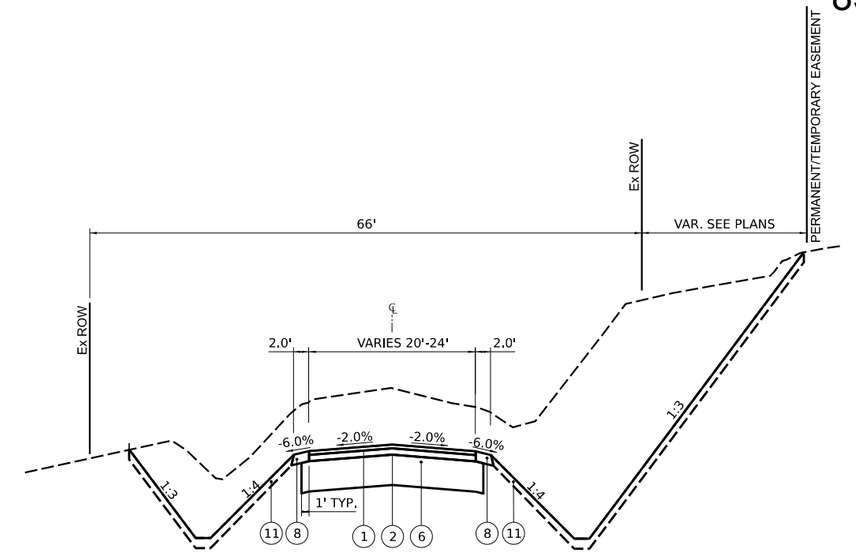

PROPOSED TYPICAL SECTION (HMA SIDE ROAD)

BIG HILL ROAD
JEFFERSON ROAD
SCHOOL ROAD
S. DAMBMAN ROAD
DUTCHTOWN ROAD

EXISTING LEGEND

- (A) HMA PAVEMENT, VAR. 3" TO 5 1/2"
- (B) AGGREGATE BASE COURSE, VAR. 9 1/2" TO 17 1/2"
- (C) AGGREGATE SHOULDER
- (D) TURF SHOULDER
- (E) SEALCOAT

PROPOSED LEGEND

- (1) HMA SURFACE COURSE, IL-9.5, MIX "D", N50, 1½"
- (2) HMA BINDER COURSE, IL-19.0, N50, 2½"
- (3) CONCRETE GUTTER, TYPE B
- (4) FULL DEPTH RECLAMATION, 8"
- (5) SUBBASE GRANULAR MATERIALS TYPE B1, 8"
- (6) AGGREGATE BASE COURSE, TYPE B, 12"
- (7) ADD ROCK (AS NEEDED)
- (8) AGGREGATE SHOULDER, TYPE B, 4"
- (9) HMA SHOULDER, 4"
- (10) AGGREGATE BASE COURSE, TYPE B, 6"
- (11) TOPSOIL, 4"

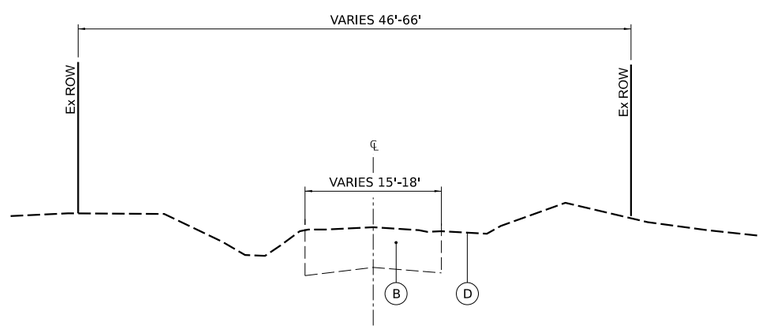

EXISTING TYPICAL SECTION (AGG SIDE ROAD)

N. DAMBMAN ROAD
WAGNER ROAD

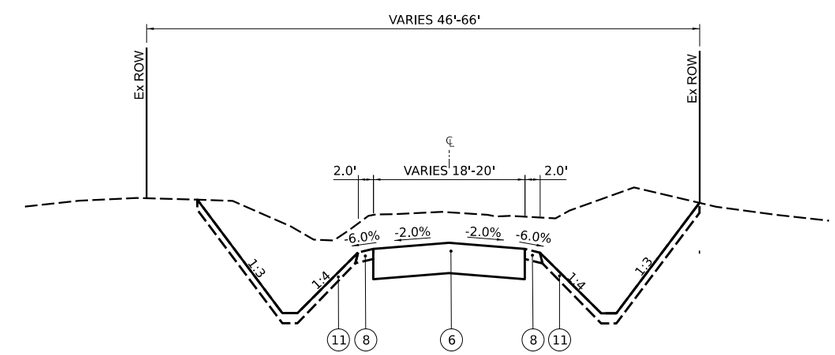

PROPOSED TYPICAL SECTION (AGG SIDE ROAD)

N. DAMBMAN ROAD
WAGNER ROAD

MODEL: Default
FILE NAME: R:\PI County\7997 Carroll County - Ideal Road Reconstruction\CADD\CADD Civil\Sheets\7997-SHT Typ Sections.dgn

CHASTAIN & ASSOCIATES LLC CONSULTING ENGINEERS	USER NAME = dwozniarski	DESIGNED -	REVISED -	STATE OF ILLINOIS DEPARTMENT OF TRANSPORTATION	IDEAL ROAD RECONSTRUCTION TYPICAL SECTIONS – SIDE ROADS
		DRAWN -	REVISED -		
	PLOT SCALE = 19.9992 ' / in.	CHECKED -	REVISED -		
	PLOT DATE = 6/14/2024	DATE - 04/17/2024	REVISED -		SCALE: SHEET 2 OF 2 SHEETS STA. TO STA.

F.A.S. RTE.	SECTION	COUNTY	TOTAL SHEETS	SHEET NO.
1084	20-00102-00-PV	CARROLL	217	9
		CONTRACT NO. 85761		
		ILLINOIS	FED. AID PROJECT	

PIPE CULVERT SCHEDULE

	50105220	542A0223	542A0229	542A0247	542A1069	542A1075	542A1081	542A1087	542A1099	542D0220	542D0223	542D0229	542D0241	20800150	28100107	28100109	28200200	54213663	54213669	54213675	54213681	54213687	54213699	54262715	54262718	54262724	54262736
	PIPE CULVERT REMOVAL (FOOT)	PIPE CULVERTS CLASS A TYPE 1			PIPE CULVERTS CLASS A TYPE 2					PIPE CULVERTS CLASS D TYPE 1				TRENCH BACKFILL	STONE RIPRAP, CLASS A4	STONE RIPRAP, CLASS A5	FILTER FABRIC	PRECAST REINFORCED FLARED END SECTIONS	PRECAST REINFORCED FLARED END SECTIONS	PRECAST REINFORCED FLARED END SECTIONS	PRECAST REINFORCED FLARED END SECTIONS	PRECAST REINFORCED FLARED END SECTIONS	PRECAST REINFORCED FLAIRED END SECTIONS	METAL FLARED END SECTIONS	METAL FLARED END SECTIONS	METAL FLARED END SECTIONS	METAL FLARED END SECTIONS
		18"	24"	42"	24"	30"	36"	42"	54"	15"	18"	24"	36"					18"	24"	30"	36"	42"	54"	15"	18"	24"	36"
STATION		FOOT	FOOT	FOOT	FOOT	FOOT	FOOT	FOOT	FOOT	FOOT	FOOT	FOOT	FOOT	CU YD	SQ YD	SQ YD	SQ YD	EACH	EACH	EACH	EACH	EACH	EACH	EACH	EACH	EACH	EACH
365+13.0	44		48											26.7	16.3		16.3		2								
365+18.0			48											26.7	16.3		16.3		2								
386+94.0																34.1	34.1										
390+70.0	37															117.3	117.3										
403+76.9	72						82							108.7		19.2	19.2				1						
411+07.1	67						103							107.2		19.2	19.2				1						
416+19.9	74							80						99.6		21.2	21.2					1					
418+79.0	60								64					88.5		25.0	25.0						1				
425+33.9	58				69									57.8	24.1		24.1		2								
443+92.6	60						66							49.8	30.8		30.8				2						
452+56.0																23.9	23.9										
467+42.9																112.9	112.9										
482+54.0																82.3	82.3										
491+23.3	49		49											30.6	24.0		24.0		2								
498+18.0	75						75							81.7		38.3	38.3				2						
509+12.2	62							68						79.3		41.9	41.9					2					
521+88.4	58			52										49.7		14.2	14.2					2					
521+95.8				52										49.7		14.2	14.2					2					
523+45.0			48											31.4	24.0		24.0		2								
529+00.0			48											31.4	24.0		24.0		2								
569+75.0						69								69.7	15.4		15.4			1							
586+01.1	54		48											31.4	24.0		24.0		2								
SIDE ROADS																											
361+85.0			25											35.4					1								
362+00.0			17																1								
414+68.8	41	68												35.9				2									
454+59.6	42	67												13.4				2									
545+49.0	68		64											18.8					2								
DRIVEWAYS																											
364+67.4	20																										
378+10.7	76										97			24.3											2		
378+70.0										103				26.1										2			
380+06.4	46										60			9.0											2		
380+40.5	69									87				17.6										2			
384+05.5	64											58		8.3												2	
388+22.1	67									60				6.2										2			
402+88.0										48				7.9										2			
418+37.7										48				7.9										2			
430+20.0										48				7.9										2			
437+89.9	30									73				8.5										2			
439+73.3	24																										
455+86.6	19									38				8.0										2			
478+31.6	28									30				3.4										2			
478+47.0	61									71				40.5										2			
480+86.6	28										58			7.6											2		
483+43.1										33				3.6										2			
499+85.1	30																										
506+00.0	29									59				9.6										2			
506+05.8	34										62			7.9											2		
519+38.0	44									31				2.5										2			
526+32.2	82												48	7.4													2
532+24.0	29																										
539+93.3	31																										
545+23.2	28									57				4.2										2			
550+77.3	28									65				6.3										2			
551+79.0	30									34				3.6										2			
551+79.0	28									39				11.6										2			
559+00.0											46			7.7											2		
566+00.0										45				8.5										2			
571+94.9	21									70				12.7										2			
571+94.9	22											70		7.2												2	
575+22.3	42									60				14.6										2			
578+33.1	23																										
584+00.0										56				7.9										2			
584+63.2	27																										
592+16.1	32										44			4.5											2		
593+75.4	36										36			5.3											2		
594+60.0										45				7.7										2			
TOTAL	2049	135	395	104	69	69	326	148	64	1200	403	128	48	1439	199	564	763	4	18	1	6	7	1	44	14	4	2

MODEL: 1 Culvert Schedules
FILE NAME: R:\Proj_County\7997 Carroll County - Ideal Road Reconstruction\CADD\CADD_Civil\Sheets\7997-Sht_Schedules - Other.dgn

CHASTAIN & ASSOCIATES LLC
CONSULTING ENGINEERS

USER NAME = dwozniarski	DESIGNED -	REVISED -	
	DRAWN -	REVISED -	
PLOT SCALE = 0.16666633 ' / in.	CHECKED -	REVISED -	
PLOT DATE = 6/19/2024	DATE - 04/17/2024	REVISED -	

STATE OF ILLINOIS
DEPARTMENT OF TRANSPORTATION

IDEAL ROAD RECONSTRUCTION
SCHEDULES – CULVERTS

SCALE: SHEET 1 OF 7 SHEETS STA. TO STA.

F.A.S. RTE.	SECTION	COUNTY	TOTAL SHEETS	SHEET NO.
1084	20-00102-00-PV	CARROLL	217	10

CONTRACT NO. 85761

ILLINOIS FED. AID PROJECT

85761

PAVING SHEDULE - IDEAL ROAD

START STATION	END STATION	31101600 SUBBASE GRANULAR MATERIAL TYPE B 8"	35101800 AGGREGATE BASE COURSE TYPE B 6"	35102400 AGGREGATE BASE COURSE TYPE B 12"	40600275 BITUMINOUS MATERIALS (PRIME COAT)	40600290 BITUMINOUS MATERIALS (TACK COAT)	40603080 HOT-MIX ASPHALT BINDER COURSE IL-19.0 N50	40604060 HOT-MIX ASPHALT SURFACE COURSE IL-9.5, MIX "D" N50	48101498 AGGREGATE SHOULDER TYPE B 4"	48203013 HOT-MIX ASPHALT SHOULDERS 4"	LR400880 FULL DEPTH RECLAMATION 8.0"	LR400015 ADD ROCK
		SQ YD	SQ YD	SQ YD	POUND	POUND	SQ YD	SQ YD	SQ YD	SQ YD	SQ YD	SQ YD
361+74.2	405+40.0	3275.0		148.9	27064.0	2706.0	1684.0	1010.0	4851.0		12828.0	12828.0
405+40.0	407+92.0	728.0		728.0	1512.0	151.0	94.0	56.0	280.0		728.0	728.0
407+92.0	455+57.0	3177.0			28591.0	2859.0	1779.0	1067.0	5294.0		13766.0	13766.0
455+57.0	462+27.0	1936.0		1936.0	4021.0	402.0	250.0	150.0	744.0		1936.0	1936.0
462+27.0	472+74.0	698.0			6282.0	628.0	391.0	235.0	1163.0		3025.0	3025.0
472+74.0	473+00.0	17.0	14.0		176.0	18.0	10.0	6.0	14.0	9.0	75.0	75.0
473+00.0	475+46.0	164.0	273.0		1877.0	188.0	92.0	55.0		178.0	711.0	711.0
475+46.0	476+05.0	39.0	33.0		401.0	40.0	22.0	13.0	33.0	21.0	170.0	170.0
476+05.0	514+26.0	2547.0			22925.0	2293.0	1426.0	856.0	4246.0		11038.0	11038.0
514+26.0	517+31.0	203.0	339.0		2324.0	232.0	114.0	68.0		220.0	881.0	881.0
517+31.0	536+66.0	1290.0			11610.0	1161.0	722.0	433.0	2150.0		5590.0	5590.0
536+66.0	540+64.0	265.0	221.0		2711.0	271.0	149.0	89.0	221.0	144.0	1150.0	1150.0
540+64.0	541+29.3	44.0			392.0	39.0	24.0	15.0	73.0		189.0	189.0
542+12.3	588+39.9	3085.0			27765.0	2777.0	1728.0	1037.0	5142.0		13369.0	13369.0
588+39.9	599+00.0	707.0			6361.0	636.0	396.0	237.0	1178.0		3063.0	3063.0
TOTAL		18175.0	880.0	2813.0	144012.0	14401.0	8881.0	5327.0	25389.0	572.0	68519.0	68519.0

PAVING SCHEDULE - SIDE ROADS

STATION	OFFSET	SIDE ROAD	35102400 AGGREGATE BASE COURSE TYPE B 12"	40600275 BITUMINOUS MATERIALS (PRIME COAT)	40600290 BITUMINOUS MATERIALS (TACK COAT)	40603080 HOT-MIX ASPHALT BINDER COURSE IL-19.0 N50	40604060 HOT-MIX ASPHALT SURFACE COURSE IL-9.5, MIX "D" N50	48101498 AGGREGATE SHOULDER TYPE B 4"
			SQ YD	POUND	POUND	TON	TON	SQ YD
388+22.1	LT	BIG HILL ROAD	450	1012	101	63.0	38.0	115.1
414+68.8	RT	JEFFERSON ROAD	572	1287	129	80.0	48.0	71.1
454+59.6	LT	SCHOOL RD	1000	2250	225	140.0	84.0	159.1
494+34.5	RT	S DAMBMAN ROAD	493	1109	111	69.0	41.0	72.4
494+38.2	LT	N DAMBMAN ROAD	555					85.8
545+38.2	RT	WAGNER ROAD	427					61.3
595+38.1	LT	DUTCHTOWN ROAD	998	2245	224	140.0	84.0	105.8
TOTAL			4495.0	7903.0	790.0	492.0	295.0	670.7

MODEL: 3 PavIng
FILE NAME: R:\PI_County\7997 Carroll County - Ideal Road Reconstruction\CADD\CADD_Civil\Sheets\7997-Sht_Schedules - Other.dgn

CHASTAIN & ASSOCIATES LLC
CONSULTING ENGINEERS

USER NAME = dwozniarski	DESIGNED -	REVISED -
	DRAWN -	REVISED -
PLOT SCALE = 0.16666633 ' / in.	CHECKED -	REVISED -
PLOT DATE = 6/14/2024	DATE - 04/17/2024	REVISED -

STATE OF ILLINOIS
DEPARTMENT OF TRANSPORTATION

IDEAL ROAD RECONSTRUCTION
SCHEDULES – PAVING

SCALE: | SHEET 3 OF 7 SHEETS | STA. | TO STA.

F.A.S. RTE.	SECTION	COUNTY	TOTAL SHEETS	SHEET NO.
1084	20-00102-00-PV	CARROLL	217	11

CONTRACT NO. 85761

ILLINOIS | FED. AID PROJECT

DRIVEWAY SCHEDULE

LOCATION	OFFSET	ENTRANCE TYPE	35102000 AGGREGATE BASE COURSE TYPE B 8" SQ YD	40800025 BITUMINOUS MATERIALS (PRIME COAT) POUND	40800050 INCIDENTAL HOT-MIX ASPHALT SURFACING TON	42300300 P.C.C. DRIVEWAY PAVEMENT 7" SQ YD	44000200 DRIVEWAY PAVEMENT REMOVAL SQ YD
378+10.73	RT	CE	209.3	48.8	2.7		
378+70.00	LT	FE	184.0				
380+06.41	RT	PE	109.3	305.0	17.1		101.7
380+40.50	LT	CE	187.1	48.8	2.7		
384+05.48	LT	CE	142.6	48.8	2.7		
388+22.05	RT	FE	72.9				
399+61.14	RT	PE	65.3	232.5	13.0		58.9
399+95.69	LT	TURNOUT	50.6	97.5	5.5		
400+59.35	RT	PE	41.3	156.0	8.7		36.1
402+88.03	LT	FE	107.1				
407+08.96	LT	FE	81.8				
418+37.65	LT	FE	81.8				
427+98.99	RT	FE	95.1				
429+05.64	LT	PE	77.2	272.5	15.3		61.3
430+20.00	LT	FE	81.8				
437+89.88	RT	FE	81.8				
444+98.91	RT	PE	55.1	175.0	9.8		
455+86.55	RT	FE	72.9				
475+14.54	RT	PE	64.0			88.9	38.9
478+31.58	LT	FE	81.8				
478+46.95	RT	FE	126.2				
480+86.57	LT	FE	81.8				
483+43.08	RT	FE	81.8				
502+65.32	LT	FE	81.8				
502+65.32	RT	FE	81.8				
506+00.00	LT	FE	81.8				
506+05.81	RT	FE	81.8				
515+34.43	RT	PE	59.6				
519+38.04	LT	PE	80.4	223.8	12.5		53.9
526+32.15	RT	FE	99.6				
532+23.96	LT	FE	81.8				
538+21.68	LT	PE	81.8	250.0	14.0		52.3
539+93.26	LT	PE	55.1	175.0	9.8		25.9
545+23.20	LT	FE	81.8				
550+77.25	LT	FE	68.4				
551+79.04	RT	FE	107.1				
551+79.02	LT	PE	58.7	165.0	9.2		55.9
555+00.00	LT	FE	81.8				
559+00.00	LT	FE	101.8				
566+00.00	RT	FE	81.8				
571+94.86	LT	FE	81.8				
571+96.27	RT	FE	117.3				
575+22.34	RT	CE	127.1	355.0	19.9		52.2
584+00.00	RT	FE	81.8				
592+16.09	RT	CE	81.8				
593+75.44	RT	PE	82.6	230.0	12.9		52.8
594+60.00	LT	FE	81.8				
JEFFERSON RD	RT	FE	80.1				
DUTCHTOWN RD	RT	PE	118.4				
TOTAL			4452	2784	156	89	590

MODEL: 4 Driveways
FILE NAME: R:\Proj_County\7997 Carroll County - Ideal Road Reconstruction\CADD\CADD_Civil\Sheets\7997-Sht_Schedules - Other.dgn

CHASTAIN & ASSOCIATES LLC
CONSULTING ENGINEERS

USER NAME = dwozniarski	DESIGNED -	REVISED -
	DRAWN -	REVISED -
PLOT SCALE = 0.16666633 ' / in.	CHECKED -	REVISED -
PLOT DATE = 6/14/2024	DATE - 04/17/2024	REVISED -

STATE OF ILLINOIS
DEPARTMENT OF TRANSPORTATION

IDEAL ROAD RECONSTRUCTION
SCHEDULES – DRIVEWAYS

SCALE: | SHEET 4 OF 7 SHEETS | STA. | TO STA.

F.A.S. RTE.	SECTION	COUNTY	TOTAL SHEETS	SHEET NO.
1084	20-00102-00-PV	CARROLL	217	12

CONTRACT NO. 85761

ILLINOIS | FED. AID PROJECT

GUARDRAIL SCHEDULE

STATION	STATION	OFFSET	63000003 STEEL PLATE BEAM GUARD RAIL TYPE A, 9 FT POSTS	63100075 TRAFFIC BARRIER TERMINAL, TYPE 5A	63100167 TRAFFIC BARRIER TERMINAL, TY 1 (SPL) TANGENT	63200310 GUARDRAIL REMOVAL	72501000 TERMINAL MARKER DIRECT APPLIED	78200005 GUARDRAIL REFLECTORS TYPE A
			FOOT	EACH	EACH	FOOT	EACH	EACH
385+81.86	387+45.68	RT				164		
389+90.04	391+66.43	LT				176		
389+71.41	391+48.21	RT				177		
539+03.57	539+53.57	RT			1		1	1
539+53.57	541+16.07	RT	162.5					2
541+16.07	541+29.34	RT		1				
542+12.26	542+25.53	RT		1				
542+25.53	542+75.53	RT			1		1	1
540+66.07	541+16.07	LT			1		1	1
541+16.07	541+29.34	LT		1				
542+12.26	542+25.53	LT		1				
542+25.53	543+88.03	LT	162.5					2
543+88.03	544+38.03	LT			1		1	1
540+52.34	541+29.34	LT				77		
542+12.26	543+26.26	LT				114		
540+15.40	541+29.34	RT				114		
542+12.26	542+92.26	RT				80		
TOTAL			325	4	4	902	4	8

GUTTER SCHEDULE

STATION	STATION	OFFSET	44000400 GUTTER REMOVAL	60602800 CONCRETE GUTTER TYPE B	60600095 CLASS SI CONCRETE (OUTLET)
			FOOT	FOOT	CU YD
472+73.0	475+72.0	LT	299.0		
472+74.0	476+26.0	RT	352.0		
473+24.0	475+22.0	LT		198.0	3.4
472+98.0	475+81.0	RT		283.0	3.4
514+49.0	517+73.0	LT	324.0		
514+52.0	515+27.0	RT	75.0		
515+43.0	516+63.0	RT	120.0		
514+50.0	517+07.0	LT		257.0	3.4
514+50.0	517+07.0	RT		257.0	3.4
521+99.4	523+42.0	RT			
523+47.7	526+11.6	RT			
526+52.5	528+96.1	RT			
529+02.5	533+00.0	RT			
536+72.0	539+47.0	LT	275.0		
536+90.0	540+40.0	LT		350.0	6.8
TOTAL			1445	1345	20

SIGN SCHEDULE

STATION	SIDE	FACING	TYPE OF SIGN	SIGN CODE	SIGN SIZE	72000100 SIGN PANEL TYPE 1	72000200 SIGN PANEL TYPE 2	72800100 TELESCOPING STEEL SIGN SUPPORT	72400100 REMOVE SIGN PANEL ASSEMBLY - TYPE A	72400200 REMOVE SIGN PANEL ASSEMBLY - TYPE B
					INCH	SQ FT	SQ FT	FT	EACH	EACH
361+15	RT	W	STOP SIGN	R1-1	36x36	9.00		16	1	
362+17.0	LT	E	STOP SIGN WITH ST. SIGN (MORRISON RD.& IDEAL)	R1-1	30x30	6.25		16	1	
362+17.0	LT	E	ST. SIGN MORRISON RD	D3-1	24x6	1.00				
362+17.0	LT	W	ST. SIGN MORRISON RD	D3-1	24x6	1.00				
362+17.0	LT	S	ST. SIGN IDEAL	D3-1	24x6	1.00				
362+17.0	LT	N	ST. SIGN IDEAL	D3-1	24x6	1.00				
366+38.0	LT	W	NO PASSING ZONE	W14-3	36x48		12.00	16		1
367+85.0	LT	E	STOP AHEAD	W3-1	36x36	9.00		16	1	
10+40.0	LT	N	STOP SIGN WITH ST. SIGN (BIG HILL RD. & IDEAL RD.)	R1-1	30x30	6.25		16	1	
10+40.0	LT	E	ST. SIGN BIG HILL RD.	D3-1	24x6	1.00				
10+40.0	LT	W	ST. SIGN BIG HILL RD.	D3-1	24x6	1.00				
10+40.0	LT	S	ST. SIGN IDEAL RD.	D3-1	24x6	1.00				
10+40.0	LT	N	ST. SIGN IDEAL RD.	D3-1	24x6	1.00				
398+18.0	LT	W	NO PASSING ZONE	W14-3	36x48		12.00	16		1
22+54.0	LT	S	STOP SIGN WITH ST. SIGN (JEFFERSON RD. & IDEAL RD)	R1-1	30x30	6.25		16	1	
414+75.0	LT	W	ST. SIGN JEFFERSON RD.	D3-1	24x6	1.00		16	1	
414+75.0	LT	E	ST. SIGN JEFFERSON RD.	D3-1	24x6	1.00				
414+75.0	LT	S	ST. SIGN IDEAL RD.	D3-1	24x6	1.00				
415+48.0	RT	E	NO PASSING ZONE	W14-3	36x48		12.00	16		1
418+10.0	LT	W	NO PASSING ZONE	W14-3	36x48		12.00	16		1
422+68.0	RT	W	SCHOOL BUS STOP AHEAD	S3-1	30x30	6.25		16	1	
440+80.0	RT	E	NO PASSING ZONE	W14-3	36x48		12.00	16		1
449+70.0	LT	W	NO PASSING ZONE	W14-3	36x48		12.00	16		1
30+41.0	LT	N	STOP SIGN WITH ST SIGN (SCHOOL RD & IDEAL RD)	R1-1	30x30	6.25		16	1	
30+41.0	LT	E	ST. SIGN SCHOOL RD	D3-1	24x6	1.00		16	1	
30+41.0	LT	N	ST. SIGN IDEAL RD.	D3-1	24x6	1.00				
454+50.0	RT	N	TWO DIRECTION LARGE ARROW	W1-7	48x24	8.00		30	1	
460+10.0	LT	E	SIDE ROAD (RIGHT)	W2-2R	30x30	6.25		16		1
460+10.0	LT	E	SPEED LIMIT	W13-1-45	24x24	4.00				
483+45.0	RT	W	NO PASSING ZONE	W14-3	36x48		12.00	16		1
484+10.0	LT	E	NO PASSING ZONE	W14-3	36x48		12.00	16		1
42+58.0	LT	S	STOP SIGN WITH ST. SIGN (DAMBMAN RD. & IDEAL RD)	R1-1	30x30	6.25		16	1	
42+58.0	LT	W	ST. SIGN DAMBMAN RD	D3-1	24x6	1.00				
42+58.0	LT	S	ST. SIGN IDEAL RD.	D3-1	24x6	1.00				
42+58.0	LT	N	ST. SIGN IDEAL RD.	D3-1	24x6	1.00				
50+38.0	LT	N	STOP SIGN	R1-1	30x30	6.25		16	1	
524+65.0	RT	E	NO PASSING ZONE	W14-3	36x48		12.00	16		1
62+62.0	LT	S	STOP SIGN WITH ST SIGN (WAGNER RD & IDEAL RD)	R1-1	30x30	6.25		16	1	
62+62.0	LT	W	ST. SIGN WAGNER RD	D3-1	24x6	1.00				
62+62.0	LT	E	ST. SIGN WAGNER RD	D3-1	24x6	1.00				
62+62.0	LT	S	ST. SIGN IDEAL RD.	D3-1	24x6	1.00				
528+70.0	LT	W	NO PASSING ZONE	W14-3	36x48		12.00	16		1
559+10.0	RT	E	NO PASSING ZONE	W14-3	36x48		12.00	16		1
585+50.0	RT	W	LEFT TURN	W1-2L	30x30	6.25		16	1	
588+00.0	RT	W	LEFT TURN	W1-2L	30x30	6.25		16		1
588+00.0	RT	W	SPEED LIMIT	W13-1-35	24x24	4.00				
70+51.0	LT	SE	STOP SIGN WITH ST. SIGN (DUTCHTOWN RD.& IDEAL)	R1-1	30x30	6.25		16	1	
70+51.0	LT	W	ST. SIGN DUTCHTOWN RD.	D3-1	24x6	1.00				
70+51.0	LT	E	ST. SIGN DUTCHTOWN RD.	D3-1	24x6	1.00				
70+51.0	LT	SE	ST. SIGN IDEAL RD.	D3-1	24x6	1.00				
70+51.0	LT	NE	ST. SIGN IDEAL RD.	D3-1	24x6	1.00				
595+35.0	LT	SE	TWO DIRECTION LARGE ARROW	W1-7	48x24	8.00		30	1	
TOTAL						140	132	488	16	13

MODEL: 7 Sign Schedule
FILE NAME: R:\Proj County\7997 Carroll County - Ideal Road Reconstruction\CADD\CADD_Civil\Sheets\7997-Sht_Schedules - Other.dgn

CHASTAIN & ASSOCIATES LLC
CONSULTING ENGINEERS

USER NAME = dwozniarski	DESIGNED -	REVISED -	
	DRAWN -	REVISED -	
PLOT SCALE = 0.16666633 ' / in.	CHECKED -	REVISED -	
PLOT DATE = 6/14/2024	DATE - 04/17/2024	REVISED -	

STATE OF ILLINOIS
DEPARTMENT OF TRANSPORTATION

IDEAL ROAD RECONSTRUCTION
SCHEDULES – SIGNS

SCALE: | SHEET 6 OF 7 SHEETS | STA. | TO STA.

F.A.S. RTE.	SECTION	COUNTY	TOTAL SHEETS	SHEET NO.
1084	20-00102-00-PV	CARROLL	217	14

CONTRACT NO. 85761

ILLINOIS | FED. AID PROJECT

PAVEMENT MARKING SCHEDULE

STATION TO STATION		78001110				78001180
		PAINT PAVEMENT MARKING, LINE 4"				PAINT PAVEMENT MARKING, LINE 24"
		4" WHITE LINE		4" YELLOW LINE		
		SOLID	SKIP-DASH	SOLID	SKIP-DASH	SOLID
		(FOOT)				
361+74.2	362+00.0	51.5				12.0
362+00.0	366+10.0	820.0		410.0	102.5	
366+10.0	376+32.0	2044.0		2044.0		
376+32.0	398+15.0	4278.0		2183.0	545.8	
398+15.0	407+20.0	1810.0		1810.0		
407+20.0	415+57.0	1674.0		837.0	209.3	
415+57.0	418+36.0	485.0			69.8	
418+36.0	426+00.0	1528.0		764.0	191.0	
426+00.0	432+32.0	1264.0		1264.0		
432+32.0	440+74.0	1684.0		842.0	210.5	
440+74.0	449+53.0	1758.0			219.8	
449+53.0	457+93.0	1594.0		840.0	210.0	
457+93.0	474+97.0	3408.0		3408.0		
474+97.0	483+66.0	1738.0		869.0	217.3	
483+66.0	484+24.0	116.0			14.5	
484+24.0	493+90.0	1932.0		966.0	241.5	
493+90.0	515+24.0	4114.0		4268.0		
515+24.0	524+64.0	1880.0		940.0	235.0	
524+64.0	528+92.0	856.0			107.0	
528+92.0	537+91.0	1798.0		899.0	224.8	
537+91.0	552+17.0	2776.0		2852.0		
552+17.0	559+34.0	1434.0		717.0	179.3	
559+34.0	584+74.0	5080.0			635.0	
584+74.0	593+43.0	1738.0		869.0	217.3	
593+43.0	600+00.0	1190.0		1314.0		
SUBTOTAL		47050.5		28096.0	3830.0	12.0
TOTAL		78977.0				12.0

MODEL: 8 Pavement Marking
FILE NAME: R:\Pt County\7997 Carroll County - Ideal Road Reconstruction\CADD\CADD_Civil\Sheets\7997-Sht_Schedules - Other.dgn

CHASTAIN & ASSOCIATES LLC
CONSULTING ENGINEERS

USER NAME = dwozniarski	DESIGNED -	REVISED -
	DRAWN -	REVISED -
PLOT SCALE = 0.16666633 ' / in.	CHECKED -	REVISED -
PLOT DATE = 6/14/2024	DATE - 04/17/2024	REVISED -

STATE OF ILLINOIS
DEPARTMENT OF TRANSPORTATION

IDEAL ROAD RECONSTRUCTION
SCHEDULES – PAVEMENT MARKINGS

SCALE: | SHEET 7 OF 7 SHEETS | STA. TO STA.

F.A.S. RTE.	SECTION	COUNTY	TOTAL SHEETS	SHEET NO.
1084	20-00102-00-PV	CARROLL	217	15

CONTRACT NO. 85761

ILLINOIS | FED. AID PROJECT

85761

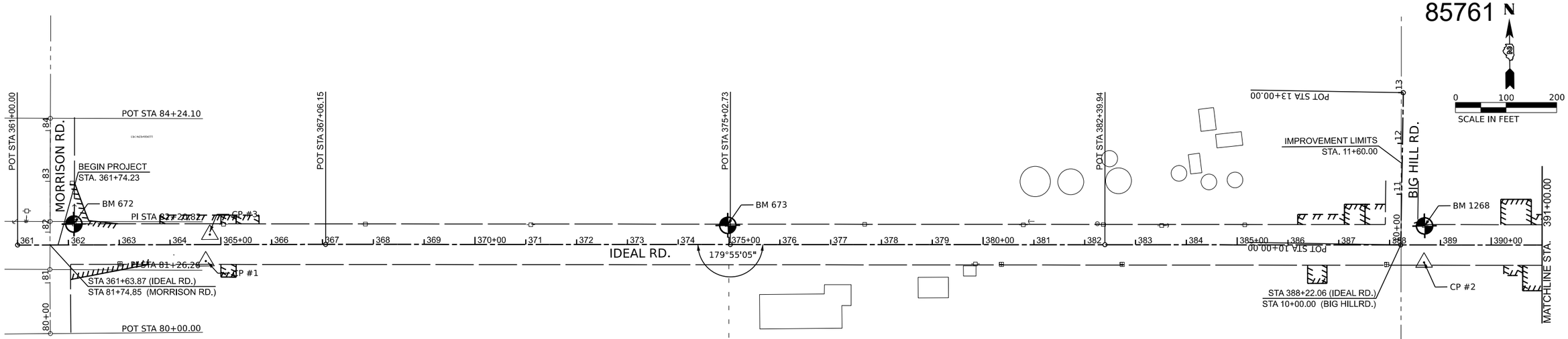

BENCHMARK INFORMATION						
POINT	STA.	OFFSET	NORTHING	EASTING	ELEVATION	DESC
672	362+10.78	41.20 LT	1933478.45	2366814.04	854.54	SPIKE IN PP
673	374+96.86	38.48 LT	1933464.78	2368100.15	835.59	SPIKE IN PP
1268	388+68.97	37.52 LT	1933450.55	2369472.19	771.37	SPIKE IN PP
1917	402+71.54	37.88 LT	1933437.10	2370874.73	787.44	SPIKE IN PP
1918	402+71.15	38.00 LT	1933437.23	2370874.34	788.23	SPIKE IN PP
1919	412+67.71	37.94 LT	1933418.99	2371871.19	783.24	SPIKE IN PP

CONTROL DATA						
POINT	STA	OFFSET	NORTHING	EASTING	ELEVATION	DESC
1	364+70.32	31.99 RT	1933402.91	2367073.02	845.50	MAG SPIKE
2	388+67.98	34.25 RT	1933378.59	2369470.51	770.85	MAG SPIKE
3	364+78.37	20.38 LT	1933455.22	2367081.51	848.38	MAG SPIKE
4	406+64.84	46.77 LT	1933441.15	2371268.32	800.37	MAG SPIKE

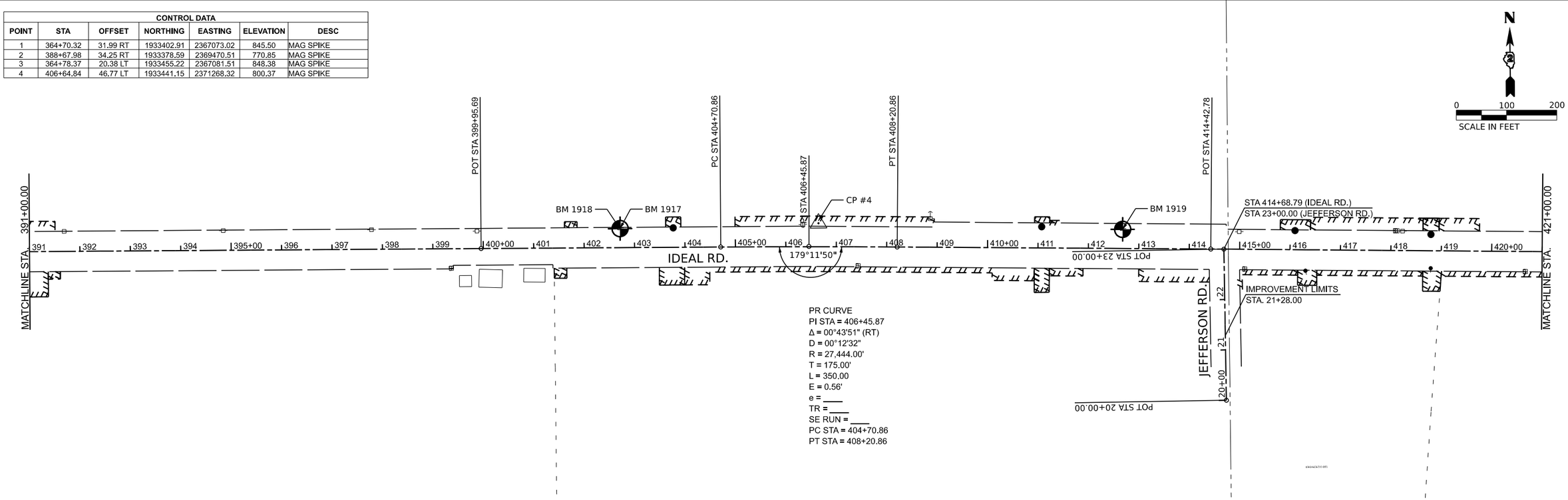

MODEL: PrCL - Plan 1 [Sheet]
FILE NAME: R:\Pr_County\7997 Carroll County - Ideal Road Reconstruction\CADD\CADD_Civil\Sheets\7997-Alignment-Ties.dgn

USER NAME = dwozniarski	DESIGNED -	REVISED -	
	DRAWN -	REVISED -	
PLOT SCALE = 0.16666633 ' / in.	CHECKED -	REVISED -	
PLOT DATE = 6/14/2024	DATE -	REVISED -	

STATE OF ILLINOIS
DEPARTMENT OF TRANSPORTATION

IDEAL ROAD RECONSTRUCTION
ALIGNMENT, TIES, AND BENCHMARKS

SCALE: 1" = 100'-0" | SHEET 1 OF 5 SHEETS | STA. TO STA.

F.A.S. RTE.	SECTION	COUNTY	TOTAL SHEETS	SHEET NO.
1084	20-00102-00-PV	CARROLL	217	16
		CONTRACT NO. 85761		
		ILLINOIS	FED. AID PROJECT	

85761

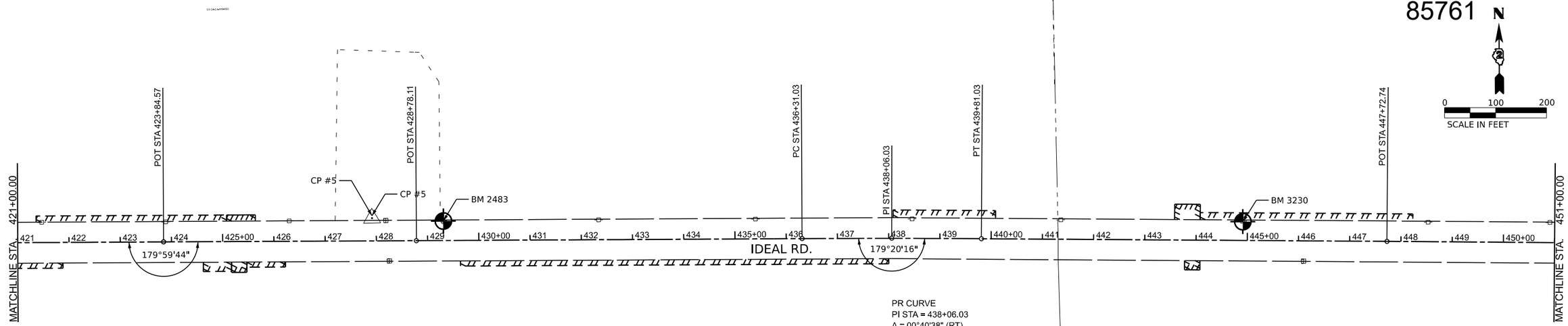

PR CURVE
PI STA = 438+06.03
Δ = 00°40'38" (RT)
D = 00°11'36"
R = 29,615.00'
T = 175.00'
L = 349.99
E = 0.52'
e = ____
TR = ____
SE RUN = ____
PC STA = 436+31.03
PT STA = 439+81.03

BENCHMARK INFORMATION						
POINT	STA.	OFFSET	NORTHING	EASTING	ELEVATION	DESC
2483	429+30.99	38.20 LT	1933378.73	2373534.02	805.29	SPIKE IN PP
3230	444+91.24	36.71 LT	1933331.44	2375093.97	739.00	SPIKE IN PP
3231	454+24.48	42.33 LT	1933302.76	2376026.84	727.50	SPIKE IN PP
3304	466+28.17	37.12 LT	1933254.35	2377229.49	707.16	SPIKE IN PP

CONTROL DATA						
POINT	STA	OFFSET	NORTHING	EASTING	ELEVATION	DESC
5	427+91.75	44.18 LT	1933388.22	2373394.99	805.52	MAG SPIKE

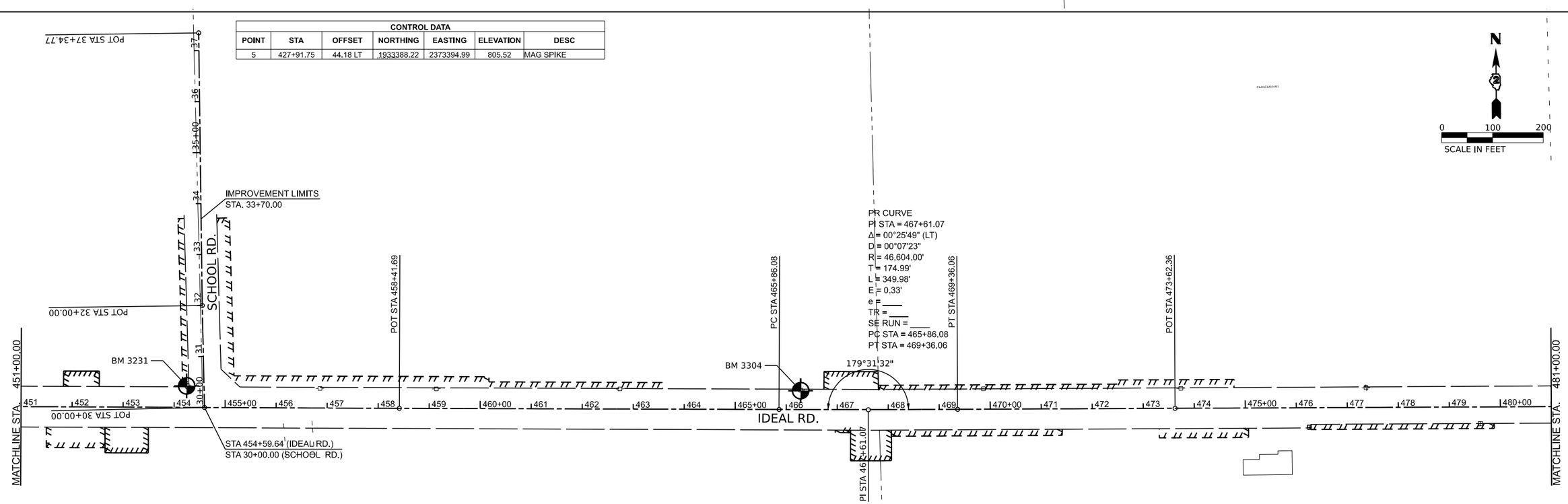

PR CURVE
PI STA = 467+61.07
Δ = 00°25'49" (LT)
D = 00°07'23"
R = 46,604.00'
T = 174.99'
L = 349.98'
E = 0.33'
e = ____
TR = ____
SE RUN = ____
PC STA = 465+86.08
PT STA = 469+36.06

MODEL: PrCL - Plan 2 [Sheet]
FILE NAME: R:\Pr_County\7997 Carroll County - Ideal Road Reconstruction\CADD\CADD_Civil\Sheets\7997-Alignment-Ties.dgn

USER NAME = dwozniarski	DESIGNED -	REVISED -	
	DRAWN -	REVISED -	
PLOT SCALE = 0.16666633 ' / in.	CHECKED -	REVISED -	
PLOT DATE = 6/14/2024	DATE -	REVISED -	

STATE OF ILLINOIS
DEPARTMENT OF TRANSPORTATION

IDEAL ROAD RECONSTRUCTION
ALIGNMENT, TIES, AND BENCHMARKS

SCALE: 1" = 100' | SHEET 2 OF 5 SHEETS | STA. TO STA.

F.A.S. RTE.	SECTION	COUNTY	TOTAL SHEETS	SHEET NO.
1084	20-00102-00-PV	CARROLL	217	17

CONTRACT NO. 85761

ILLINOIS | FED. AID PROJECT

85761

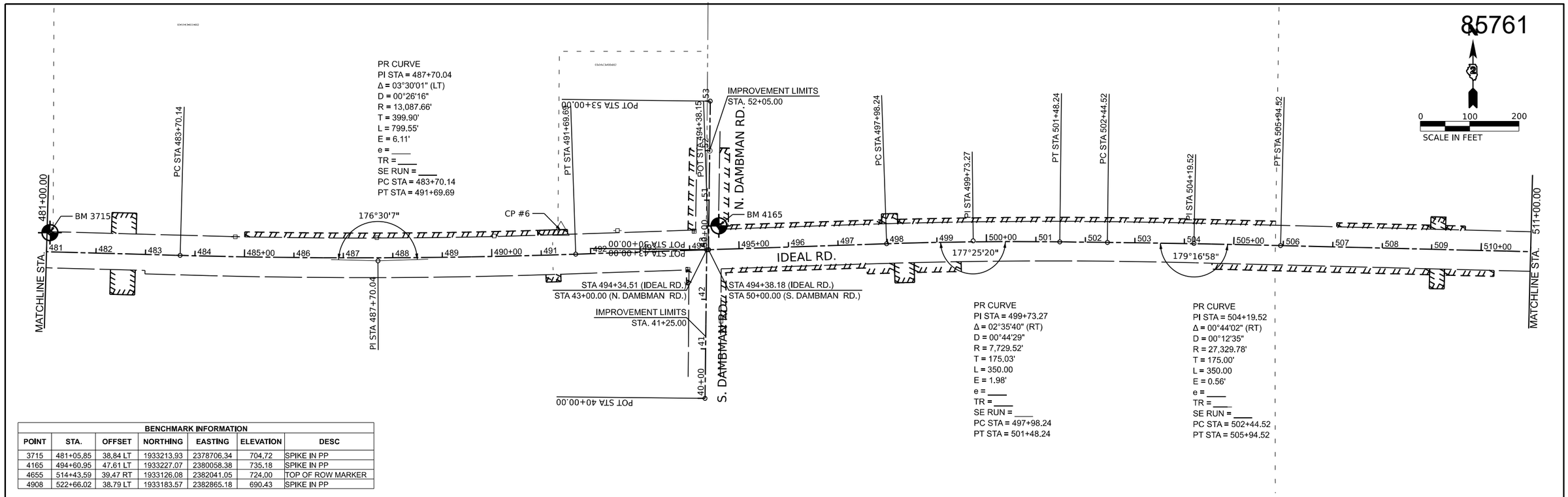

BENCHMARK INFORMATION						
POINT	STA.	OFFSET	NORTHING	EASTING	ELEVATION	DESC
3715	481+05.85	38.84 LT	1933213.93	2378706.34	704.72	SPIKE IN PP
4165	494+60.95	47.61 LT	1933227.07	2380058.38	735.18	SPIKE IN PP
4655	514+43.59	39.47 RT	1933126.08	2382041.05	724.00	TOP OF ROW MARKER
4908	522+66.02	38.79 LT	1933183.57	2382865.18	690.43	SPIKE IN PP

CONTROL DATA						
POINT	STA	OFFSET	NORTHING	EASTING	ELEVATION	DESC
6	491+41.17	48.55 LT	1933217.44	2379739.02	729.57	MAG SPIKE
7	536+78.39	30.32 RT	1933079.51	2384275.48	709.42	MAG SPIKE

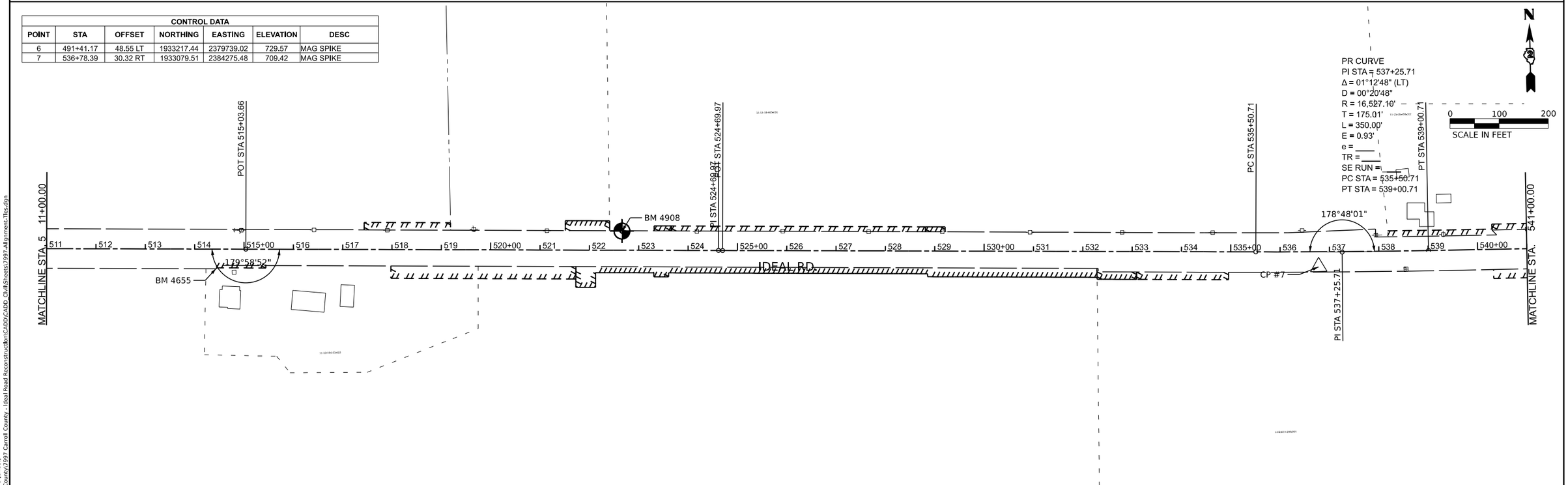

MODEL: PICL - Plan 3 [Sheet]
FILE NAME: R:\PI County\7997 Carroll County - Ideal Road Reconstruction\CADD\CADD Civil\Sheets\7997-Alignment-Ties.dgn

USER NAME = dwozniarski	DESIGNED -	REVISED -	
	DRAWN -	REVISED -	
PLOT SCALE = 0.16666685 ' / in.	CHECKED -	REVISED -	
PLOT DATE = 6/14/2024	DATE -	REVISED -	

STATE OF ILLINOIS
DEPARTMENT OF TRANSPORTATION

IDEAL ROAD RECONSTRUCTION
ALIGNMENT, TIES, AND BENCHMARKS

SCALE: 1" = 100' | SHEET 3 OF 5 SHEETS | STA. TO STA.

F.A.S. RTE.	SECTION	COUNTY	TOTAL SHEETS	SHEET NO.
1084	20-00102-00-PV	CARROLL	217	18

CONTRACT NO. 85761

ILLINOIS | FED. AID PROJECT

85761

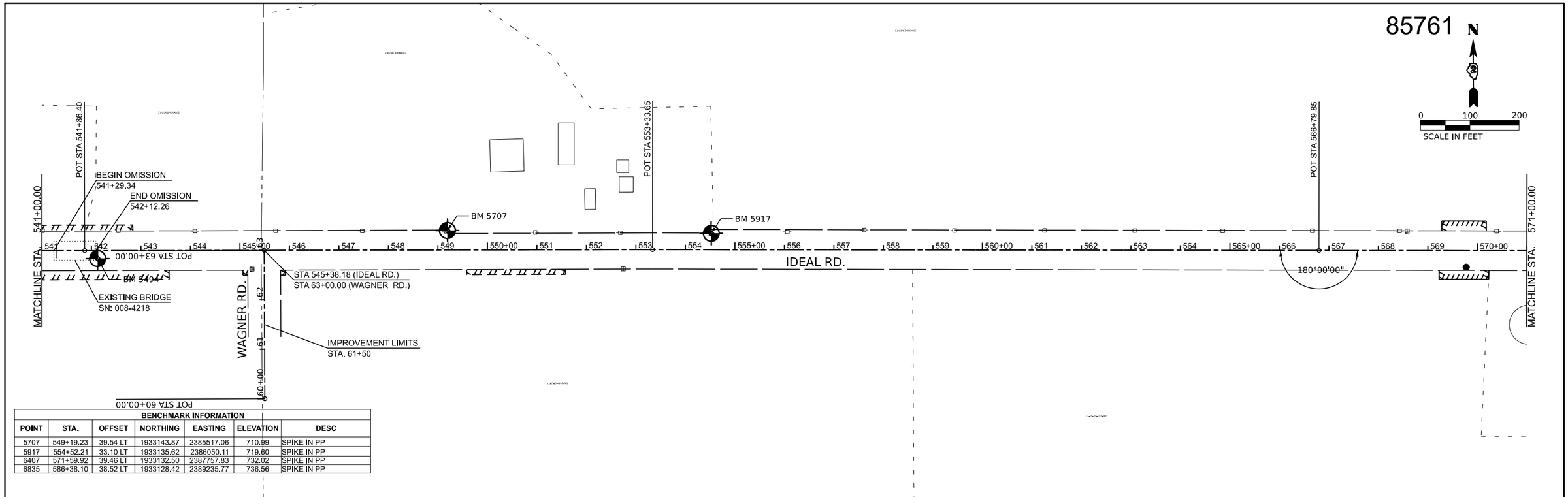

BENCHMARK INFORMATION						
POINT	STA.	OFFSET	NORTHING	EASTING	ELEVATION	DESC
5707	549+19.23	39.54 LT	1933143.87	2385517.06	710.99	SPIKE IN PP
5917	554+52.21	33.10 LT	1933135.62	2386050.11	719.60	SPIKE IN PP
6407	571+59.92	39.46 LT	1933132.50	2387757.83	732.02	SPIKE IN PP
6835	586+38.10	38.52 LT	1933128.42	2389235.77	736.56	SPIKE IN PP

CONTROL DATA						
POINT	STA	OFFSET	NORTHING	EASTING	ELEVATION	DESC
8	600+31.56	36.70 LT	1933678.07	2390323.34	735.81	5/8 SOUTH CORE

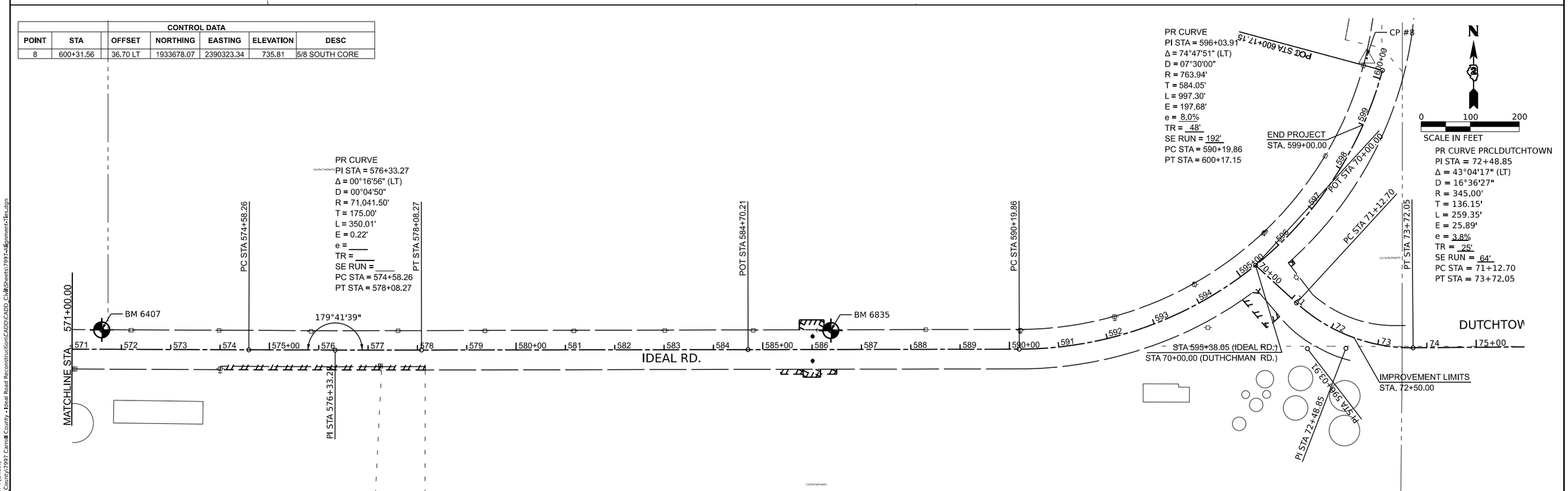

MODEL: PCL - Plan 4 [Sheet]
FILE NAME: R:\0_County\7997 Carroll County - Ideal Road Reconstruction\CADD\CADD_Civil\Sheets\7997-alignment-Ties.dgn

USER NAME = dwozniarski	DESIGNED -	REVISED -	
	DRAWN -	REVISED -	
PLOT SCALE = 0.16666633 ' / in.	CHECKED -	REVISED -	
PLOT DATE = 6/14/2024	DATE -	REVISED -	

STATE OF ILLINOIS
DEPARTMENT OF TRANSPORTATION

IDEAL ROAD RECONSTRUCTION
ALIGNMENT, TIES, AND BENCHMARKS

SCALE: 1" = 100' | SHEET 4 OF 5 SHEETS | STA. TO STA.

F.A.S. RTE.	SECTION	COUNTY	TOTAL SHEETS	SHEET NO.
1084	20-00102-00-PV	CARROLL	217	19
		CONTRACT NO. 85761		
	ILLINOIS	FED. AID PROJECT		

INTERSECTION LAYOUT

PT	STA	OFFSET	ELEV
A	83+46.81	11.2' RT	862.03
B	82+25.52	24.63' RT	860.61
C	362+37.49	12.00' LT	858.48
D	363+45.00	12.00' RT	854.05
E	362+11.34	28.59' RT	859.33
F	81+97.62	10.50' RT	860.25

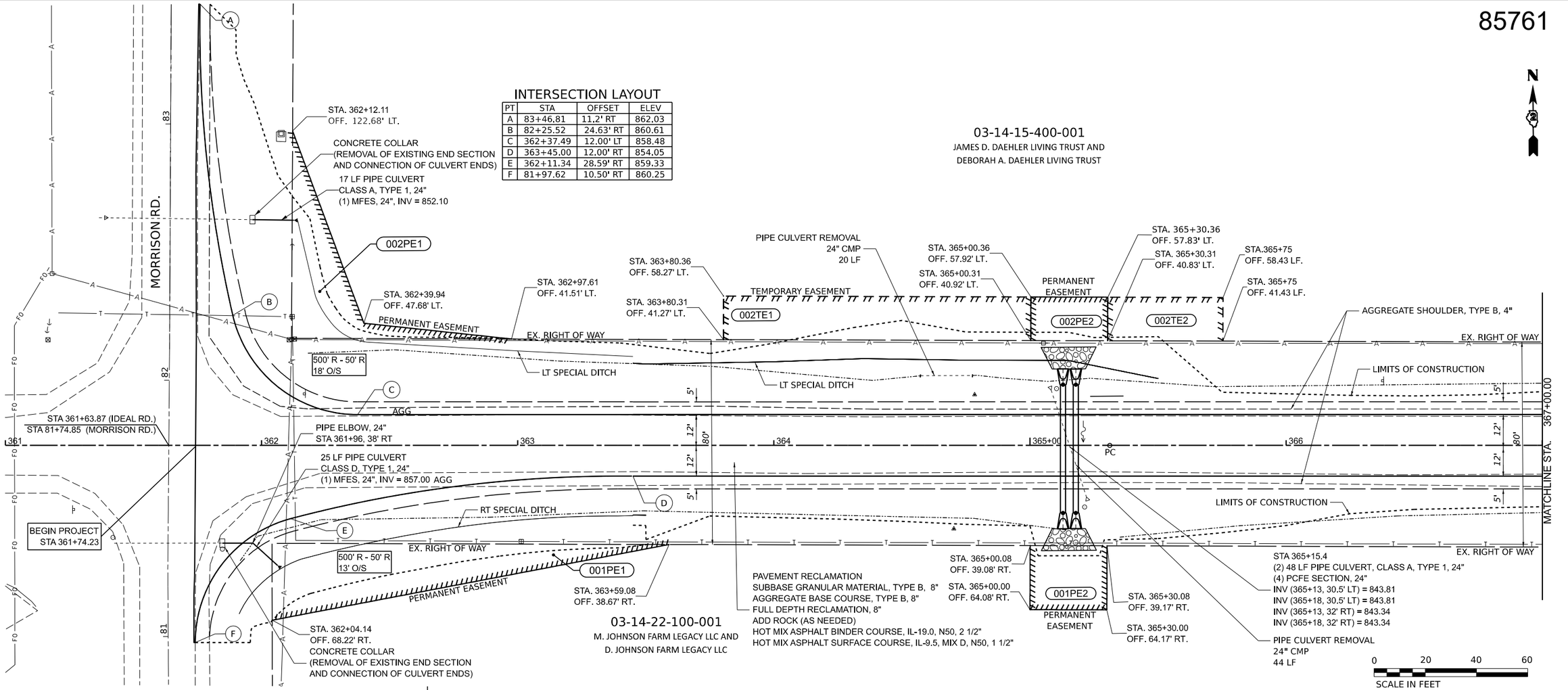

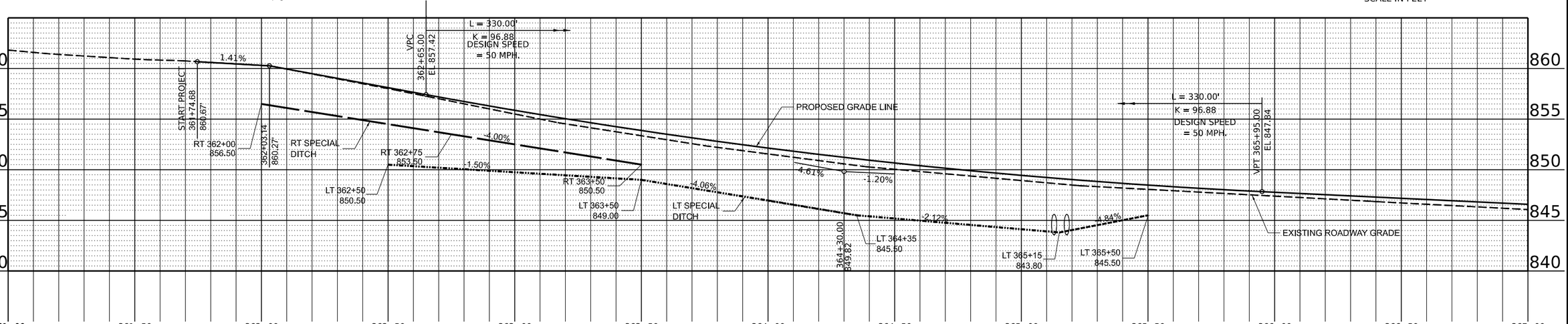

MODEL: Ideal_PR-1 [Sheet]
FILE NAME: S:\St_Louis\7997_Carroll County - Ideal Road Reconstruction\CADD\CADD_Civil\Sheets\7997-R6-01_Ideal1.dgn

CHASTAIN & ASSOCIATES LLC
CONSULTING ENGINEERS

USER NAME = dwozniarski	DESIGNED -	REVISED -	
	DRAWN -	REVISED -	
PLOT SCALE = 0.167 ' / in.	CHECKED -	REVISED -	
PLOT DATE = 6/14/2024	DATE - 04/17/2024	REVISED -	

STATE OF ILLINOIS
DEPARTMENT OF TRANSPORTATION

IDEAL ROAD RECONSTRUCTION
PLAN AND PROFILE – IDEAL ROAD

SCALE: SCALE | SHEET 1 OF 46 SHEETS | STA. TO STA.

F.A.S. RTE.	SECTION	COUNTY	TOTAL SHEETS	SHEET NO.
1084	20-00102-00-PV	CARROLL	217	20

CONTRACT NO. 85761

ILLINOIS | FED. AID PROJECT

85761

N

03-14-15-400-001
JAMES D. DAEHLER LIVING TRUST AND
DEBORAH A. DAEHLER LIVING TRUST

PAVEMENT RECLAMATION
SUBBASE GRANULAR MATERIAL, TYPE B, 8"
AGGREGATE BASE COURSE, TYPE B, 8"
FULL DEPTH RECLAMATION, 8"
ADD ROCK (AS NEEDED)
HOT MIX ASPHALT BINDER COURSE, IL-19.0, N50, 2 1/2"
HOT MIX ASPHALT SURFACE COURSE, IL-9.5, MIX D, N50, 1 1/2"

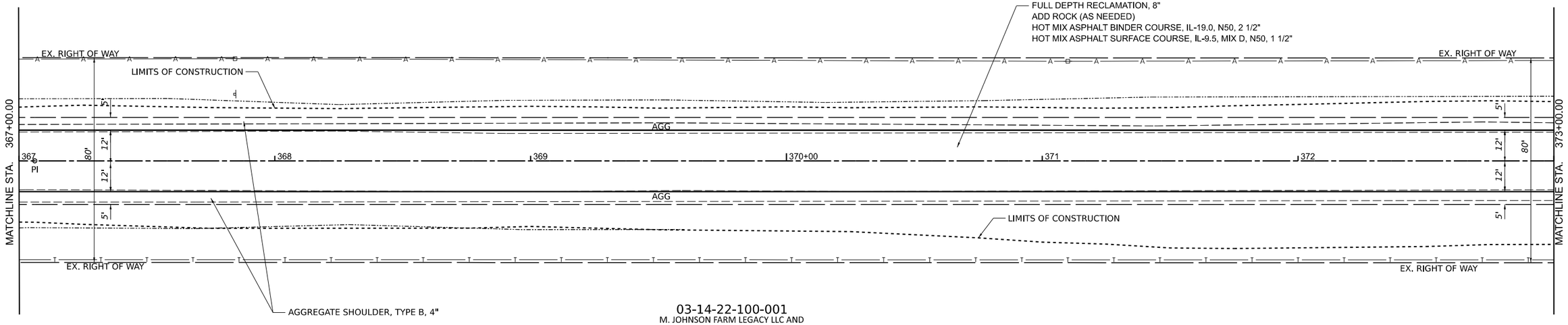

03-14-22-100-001
M. JOHNSON FARM LEGACY LLC AND
D. JOHNSON FARM LEGACY LLC

0 20 40 60
SCALE IN FEET

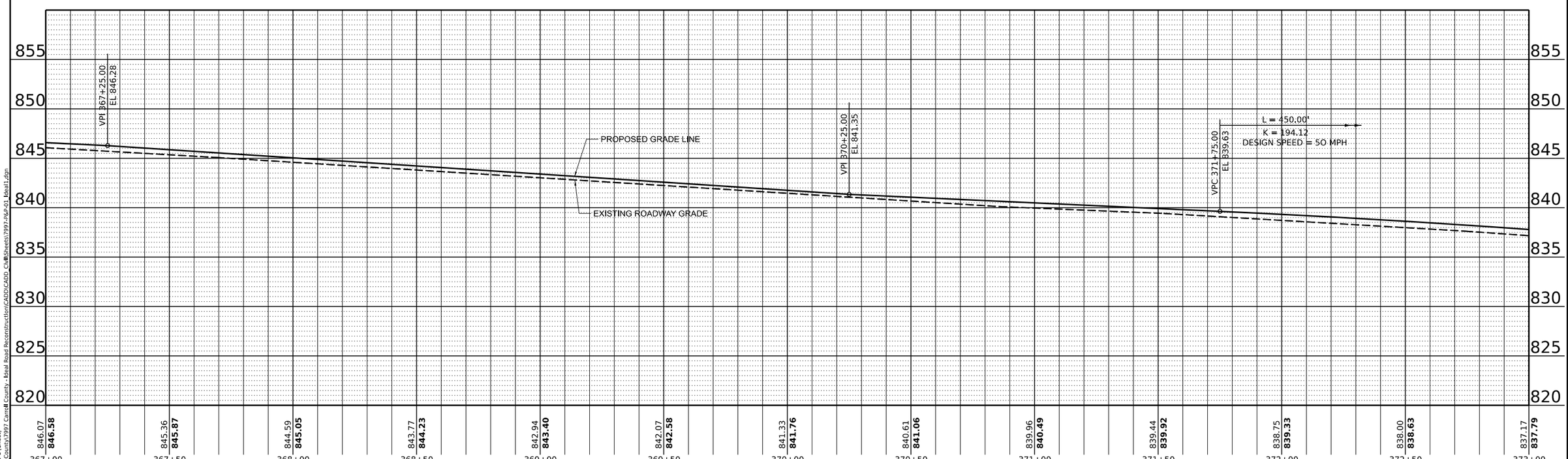

MODEL: Ideal_PR-1-1 [Sheet]
FILE NAME: R:\Proj_County\7997 Carroll County - Ideal Road Reconstruction\CADD\CADD_Civil\Sheets\7997-P&P-01_Ideal1.dgn

CHASTAIN & ASSOCIATES LLC CONSULTING ENGINEERS	USER NAME = dwozniarski	DESIGNED -	REVISED -	STATE OF ILLINOIS DEPARTMENT OF TRANSPORTATION	IDEAL ROAD RECONSTRUCTION PLAN AND PROFILE – IDEAL ROAD	F.A.S. RTE. 1084	SECTION 20-00102-00-PV	COUNTY CARROLL	TOTAL SHEETS 217 / SHEET NO. 21
		DRAWN -	REVISED -					CONTRACT NO. 85761	
	PLOT SCALE = 0.167 ' / in.	CHECKED -	REVISED -						
	PLOT DATE = 6/14/2024	DATE - 04/17/2024	REVISED -		SCALE: SCALE / SHEET 2 OF 46 SHEETS / STA. TO STA.			ILLINOIS	FED. AID PROJECT

85761

N

PAVEMENT RECLAMATION
SUBBASE GRANULAR MATERIAL, TYPE B, 8"
AGGREGATE BASE COURSE, TYPE B, 8"
FULL DEPTH RECLAMATION, 8"
ADD ROCK (AS NEEDED)
HOT MIX ASPHALT BINDER COURSE, IL-19.0, N50, 2 1/2"
HOT MIX ASPHALT SURFACE COURSE, IL-9.5, MIX D, N50, 1 1/2"

103 LF PIPE CULVERT
CLASS D, TYPE 1, 15"
(2) MFES, 15"
INV (UP) = 819.0
INV (DN) = 816.1

03-14-15-400-001
JAMES D. DAEHLER LIVING TRUST AND
DEBORAH A. DAEHLER LIVING TRUST

AGGREGATE SHOULDER, TYPE B, 4"

70' AGG FE

+70.00

EX. RIGHT OF WAY

LIMITS OF CONSTRUCTION

MATCHLINE STA. 373+00.00

MATCHLINE STA. 379+00.00

5'

AGG

80'

12'

373 374 375+00 376 377 378

RT SPECIAL DITCH

03-14-22-100-001
M. JOHNSON FARM LEGACY AND
D. JOHNSON FARM LEGACY

03-14-22-200-001
DEBORAH A. DAEHLER LIVING TRUST

PIPE CULVERT REMOVAL
15" CMP
76 LF

97 LF PIPE CULVERT
CLASS D, TYPE 1, 18"
(2) MFES, 18"
INV (UP) = 819.8
INV (DN) = 816.0

+10.73

70' AGG CE

H/O

0 20 40 60
SCALE IN FEET

B

840 835 830 825 820 815 810 805

VPI 374+00.00
EL 837.09

-1.15%

-3.46%

EXISTING ROADWAY GRADE

PROPOSED GRADE LINE

L = 450.00'
K = 194.12
DESIGN SPEED
= 50 MPH

VPT 376+25.00
EL 829.25

-2.55%

-2.87%

-4.00%

-3.50%

-6.49%

-3.83%

LT 374+50
831.80

RT 375+00
829.00

LT 375+50
829.25

RT SPECIAL DITCH

RT 377+00
822.00

LT 377+50
823.50

LT 378+00
820.25

VPT 378+30.00
EL 822.15

L = 530.00'
K = 204.69
DESIGN SPEED
= 50 MPH

LT 379+00
816.50

837.17	**837.79**	836.26	**836.83**	835.21	**835.75**	833.99	**834.53**	832.68	**833.18**	831.20	**831.71**	829.56	**830.10**	827.88	**828.39**	826.14	**826.66**	824.32	**824.92**	822.46	**823.19**	820.53	**821.45**	818.70	**819.61**
373+00		373+50		374+00		374+50		375+00		375+50		376+00		376+50		377+00		377+50		378+00		378+50		379+00	

MODEL: Ideal_PR-2-1 [Sheet]
FILE NAME: R:\Proj_County\7997 Carroll County - Ideal Road Reconstruction\CADD\CADD_Civil\Sheets\7997-P&P-01_Ideal1.dgn

CHASTAIN & ASSOCIATES LLC
CONSULTING ENGINEERS

USER NAME = dwozniarski	DESIGNED -	REVISED -	
	DRAWN -	REVISED -	
PLOT SCALE = 0.167 ' / in.	CHECKED -	REVISED -	
PLOT DATE = 6/14/2024	DATE - 04/17/2024	REVISED -	

STATE OF ILLINOIS
DEPARTMENT OF TRANSPORTATION

IDEAL ROAD RECONSTRUCTION
PLAN AND PROFILE – IDEAL ROAD

SCALE: SCALE | SHEET 3 OF 46 SHEETS | STA. TO STA.

F.A.S. RTE.	SECTION	COUNTY	TOTAL SHEETS	SHEET NO.
1084	20-00102-00-PV	CARROLL	217	22

CONTRACT NO. 85761

ILLINOIS | FED. AID PROJECT

85761

N

PAVEMENT RECLAMATION
SUBBASE GRANULAR MATERIAL, TYPE B, 8"
AGGREGATE BASE COURSE, TYPE B, 8"
FULL DEPTH RECLAMATION, 8"
ADD ROCK (AS NEEDED)
HOT MIX ASPHALT BINDER COURSE, IL-19.0, N50, 2 1/2"
HOT MIX ASPHALT SURFACE COURSE, IL-9.5, MIX D, N50, 1 1/2"

87 LF PIPE CULVERT
CLASS D, TYPE 1, 15"
(2) MFES, 15"
INV (UP) = 811.8
INV (DN) = 809.4

PIPE CULVERT REMOVAL
15" CMP
69 LF

60' AGG CE

+40.50

03-14-15-400-001
JAMES D. DAEHLER LIVING TRUST AND
DEBORAH A. DAEHLER LIVING TRUST

ELECTRICAL PAD &
TRANSFORMER TO REMAIN

58 LF PIPE CULVERT
CLASS D, TYPE 1, 24"
(2) MFES, 24"
INV (UP) = 793.2
INV (DN) = 789.6

40' AGG CE

+05.48

PIPE CULVERT REMOVAL
24" CMP
64 LF

LIMITS OF CONSTRUCTION

EX. RIGHT OF WAY

LT SPECIAL DITCH

MATCHLINE STA. 379+00.00

MATCHLINE STA. 385+00.00

5'

12'

80'

AGG

379 | 380+00 | 381 | 382 | 383 | 384

PC | PI | PT

RT SPECIAL DITCH

H/O

+06.41

30' HMA PE

PIPE CULVERT REMOVAL
15" CMP
46 LF

60 LF PIPE CULVERT
CLASS D, TYPE 1, 18"
(2) MFES, 18"
INV (UP) = 812.5
INV (DN) = 810.7

LIMITS OF CONSTRUCTION

03-14-22-200-001
DEBORAH A. DAEHLER LIVING TRUST

AGGREGATE SHOULDER, TYPE B, 4"

B

0 20 40 60
SCALE IN FEET

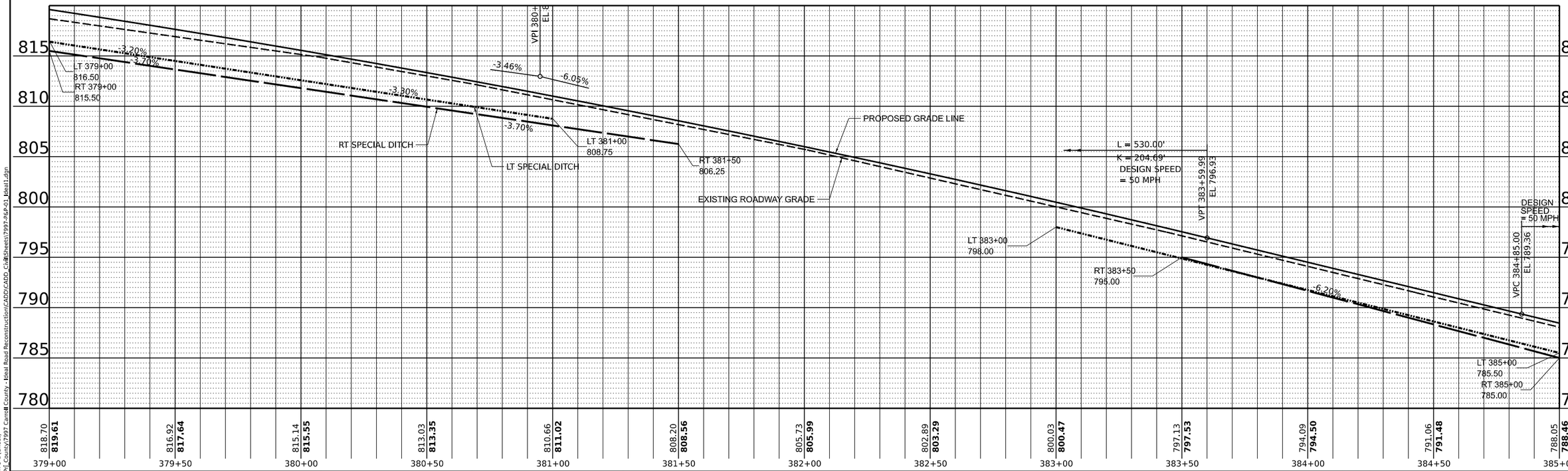

MODEL: Ideal_PR_3-1 [Sheet]
FILE NAME: R:\Proj_County\7997 Carroll County - Ideal Road Reconstruction\CADD\CADD_Civil\Sheets\7997-P&P-01_Ideal1.dgn

CHASTAIN & ASSOCIATES LLC
CONSULTING ENGINEERS

USER NAME = dwozniarski	DESIGNED -	REVISED -	
	DRAWN -	REVISED -	
PLOT SCALE = 0.167 ' / in.	CHECKED -	REVISED -	
PLOT DATE = 6/14/2024	DATE - 04/17/2024	REVISED -	

STATE OF ILLINOIS
DEPARTMENT OF TRANSPORTATION

IDEAL ROAD RECONSTRUCTION
PLAN AND PROFILE – IDEAL ROAD

SCALE: SCALE | SHEET 4 OF 46 SHEETS | STA. TO STA.

F.A.S. RTE.	SECTION	COUNTY	TOTAL SHEETS	SHEET NO.
1084	20-00102-00-PV	CARROLL	217	23

CONTRACT NO. 85761

ILLINOIS | FED. AID PROJECT

85761

SEE BIG HILL ROAD PLAN & PROFILE SHEET FOR SIDE ROAD DETAIL

N

REMOVAL OF EXISTING STRUCTURE, NO. 1

STA 386+94.2, 37°30' SKEW
5' X 4' CIP BOX CULVERT
SEE CULVERT DETAIL (S.N. 386+94)
INV(387+19.35, 32.83' LT)=767.87
INV(386+67.71, 34.49' RT) =769.13

03-14-15-400-001
JAMES D. DAEHLER LIVING TRUST AND
DEBORAH A. DAEHLER LIVING TRUST

AGGREGATE SHOULDER, TYPE B, 4"

STA. 386+20
OFF. 60.21' LT.

STA. 386+20
OFF. 40.22' LT.

TEMPORARY EASEMENT

002TE3

EX. RIGHT OF WAY

LIMITS OF CONSTRUCTION

AGG

MATCHLINE STA. 385+00.00

385+00 386 387 388 389 390+00

5' 12' 12' 5' 80'

REMOVE 164' OF EXISTING GUARDRAIL

PAVEMENT RECLAMATION
SUBBASE GRANULAR MATERIAL, TYPE B, 8"
AGGREGATE BASE COURSE, TYPE B, 8"
FULL DEPTH RECLAMATION, 8"
ADD ROCK (AS NEEDED)
HOT MIX ASPHALT BINDER COURSE, IL-19.0, N50, 2 1/2"
HOT MIX ASPHALT SURFACE COURSE, IL-9.5, MIX D, N50, 1 1/2"

0 20 40 60
SCALE IN FEET

STA. 386+38.84
OFF. 39.96' RT.

STA. 386+38.84
OFF. 75.96' RT.

002PE4

PERM. EASEMENT

STA. 386+76.85
OFF. 39.79' RT.

STA. 386+76.85
OFF. 75.78' RT.

03-14-22-200-001
JAMES D. DAEHLER LIVING TRUST AND
DEBORAH A. DAEHLER LIVING TRUST

LIMITS OF CONSTRUCTION

002PE3

PERMANENT EASEMENT

STA. 387+11.32
OFF. 80.04' LT.

STA. 386+20
OFF. 60.22' LT.

STA. 387+51.77
OFF. 80.04' LT.

TEMPORARY EASEMENT

STA. 387+91.77
OFF. 80.04' LT.

STA. 387+51.77
OFF. 40.04' LT.

002TE6

EX. RIGHT OF WAY

BIG HILL RD.

EX. RIGHT OF WAY

STA 388+22.05 (IDEAL RD.)
STA 10+00.00 (BIG HILL RD.)

10+00

±22.05

20' AGG FE

60 LF PIPE CULVERT
CLASS D, TYPE 1, 15"
(2) MFES, 15"
INV (UP) = 771.70
INV (DN) = 771.00

PIPE CULVERT REMOVAL
15" CMP
67 LF

EX. RIGHT OF WAY

004TE1

STA. 388+65.29
OFF. 40.03' LT.

03-14-23-100-001
ROGER JACOBS

03-14-14-300-001
CAROLLYNN E. FINK
AND THOMAS A. FINK

STA. 390+18.94
OFF. 90.03' LT.

STA. 390+78.94
OFF. 90.03' LT.

PERMANENT EASEMENT

004PE1

STA. 390+78.94
OFF. 60.24' LF.

PIPE CULVERT REMOVAL
18" CMP
23 LF

TEMPORARY EASEMENT

STA. 390+18.94
OFF. 40.03' LT.

STA. 390+78.94
OFF. 40.03' LT.

EX. RIGHT OF WAY

LIMITS OF CONSTRUCTION

REMOVE 176 FT OF EXISTING GUARDRAIL

REMOVAL OF EXISTING STRUCTURE, NO. 2

REMOVE 177 FT OF EXISTING GUARDRAIL

STA. 325+20.00
OFF. 39.75' RT.

STA 390+70, 24° SKEW
(2) 8' X 8' CIP BOX CULVERT
SEE CULVERT DETAILS (S.N. 390+70)
INV (390+57.09, 28.35' LT) = 761.00
INV (390+83.41, 30.77' RT) = 760.21

003TE1

TEMPORARY EASEMENT

STA. 325+20.00
OFF. 59.76' RT.

PIPE CULVERT REMOVAL
18" CMP
14 LF

STA. 390+61.99
OFF. 39.97' RT.

STA. 390+61.99
OFF. 59.76' RT.

STA. 390+61.99
OFF. 89.97' RT.

PERMANENT EASEMENT

MATCHLINE STA. 391+00.00

795 790 785 780 775 770 765 760

L = 510.00'
K = 83.83
DESIGN SPEED
= 50 MPH

VPT 389+95.00
EL 774.00

PROPOSED GRADE LINE

EXISTING ROADWAY GRADE

-6.05%

+0.03%

VPI 387+40.00
EL 773.92

LP 389+92.50
EL 774.00

788.05 **788.46** | 785.36 **785.67** | 782.85 **783.18** | 780.50 **780.99** | 778.47 **779.10** | 776.92 **777.50** | 775.57 **776.21** | 774.76 **775.21** | 774.16 **774.51** | 773.61 **774.10** | 773.59 **774.00** | 773.68 **774.01** | 773.70 **774.03**

385+00 385+50 386+00 386+50 387+00 387+50 388+00 388+50 389+00 389+50 390+00 390+50 391+00

MODEL: Ideal_PR-4-1 [Sheet]
FILE NAME: R:\Proj_County\7997 Carroll County - Ideal Road Reconstruction\CADD\CADD_Civil\Sheets\7997-P&P-01_Ideal1.dgn

CHASTAIN & ASSOCIATES LLC
CONSULTING ENGINEERS

USER NAME = dwozniarski	DESIGNED -	REVISED -	
	DRAWN -	REVISED -	
PLOT SCALE = 0.167 ' / in.	CHECKED -	REVISED -	
PLOT DATE = 6/14/2024	DATE - 04/17/2024	REVISED -	

STATE OF ILLINOIS
DEPARTMENT OF TRANSPORTATION

IDEAL ROAD RECONSTRUCTION
PLAN AND PROFILE – IDEAL ROAD

SCALE: SCALE | SHEET 5 OF 46 SHEETS | STA. TO STA.

F.A.S. RTE.	SECTION	COUNTY	TOTAL SHEETS	SHEET NO.
1084	20-00102-00-PV	CARROLL	217	24

CONTRACT NO. 85761

ILLINOIS | FED. AID PROJECT

85761

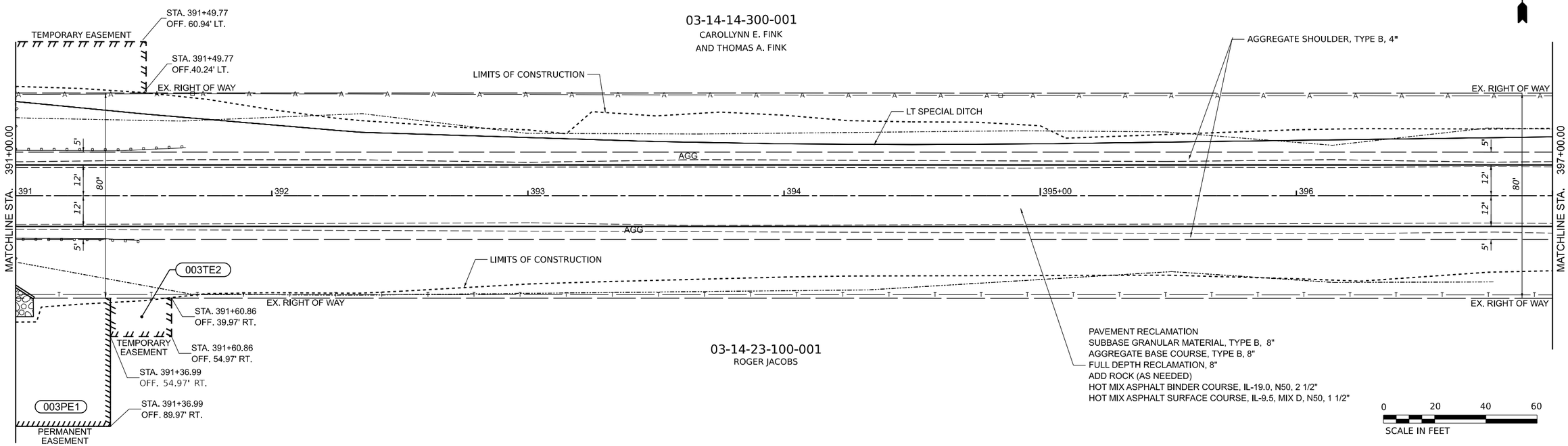

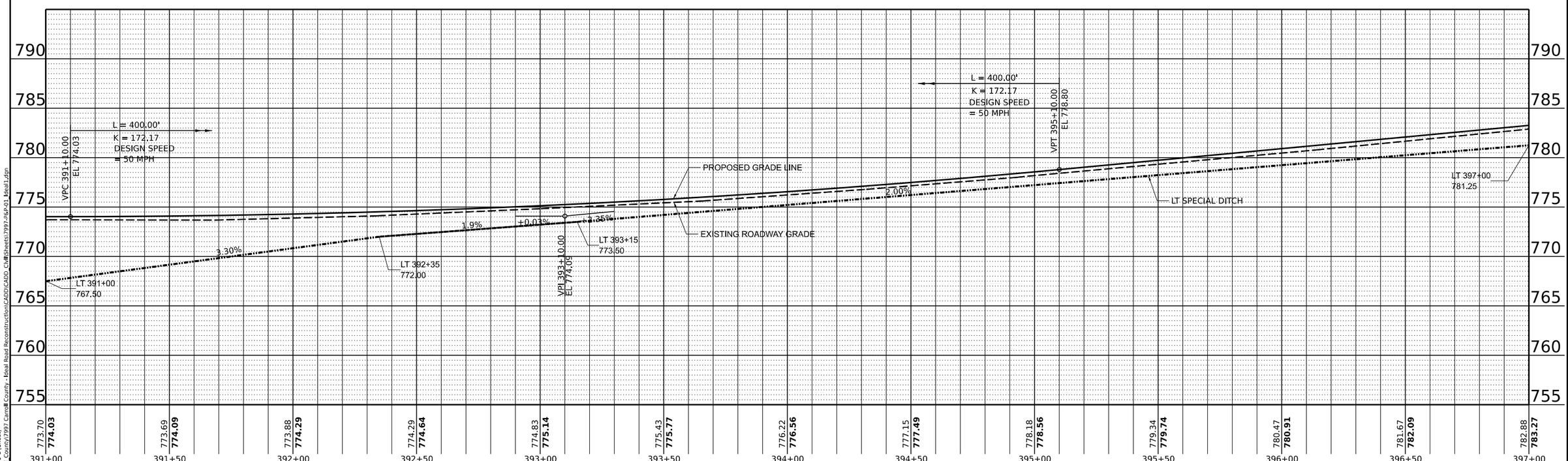

MODEL: Ideal_PR-5-1 [Sheet]
FILE NAME: R:\Proj_County\7997 Carroll County - Ideal Road Reconstruction\CADD\CADD_Civil\Sheets\7997-P&P-01_Ideal1.dgn

CHASTAIN & ASSOCIATES LLC
CONSULTING ENGINEERS

USER NAME = dwozniarski	DESIGNED -	REVISED -	
	DRAWN -	REVISED -	
PLOT SCALE = 0.167 ' / in.	CHECKED -	REVISED -	
PLOT DATE = 6/14/2024	DATE - 04/17/2024	REVISED -	

STATE OF ILLINOIS
DEPARTMENT OF TRANSPORTATION

IDEAL ROAD RECONSTRUCTION
PLAN AND PROFILE – IDEAL ROAD

SCALE: SCALE | SHEET 6 OF 46 SHEETS | STA. TO STA.

F.A.S. RTE.	SECTION	COUNTY	TOTAL SHEETS	SHEET NO.
1084	20-00102-00-PV	CARROLL	217	25

CONTRACT NO. 85761

ILLINOIS | FED. AID PROJECT

85761

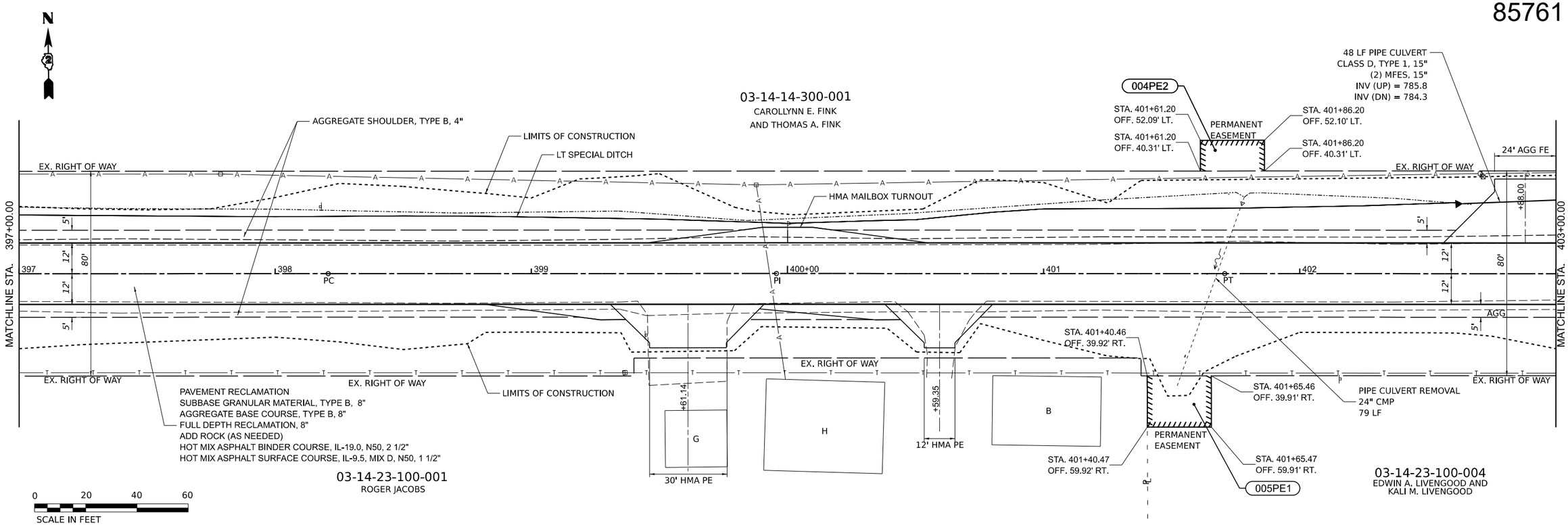

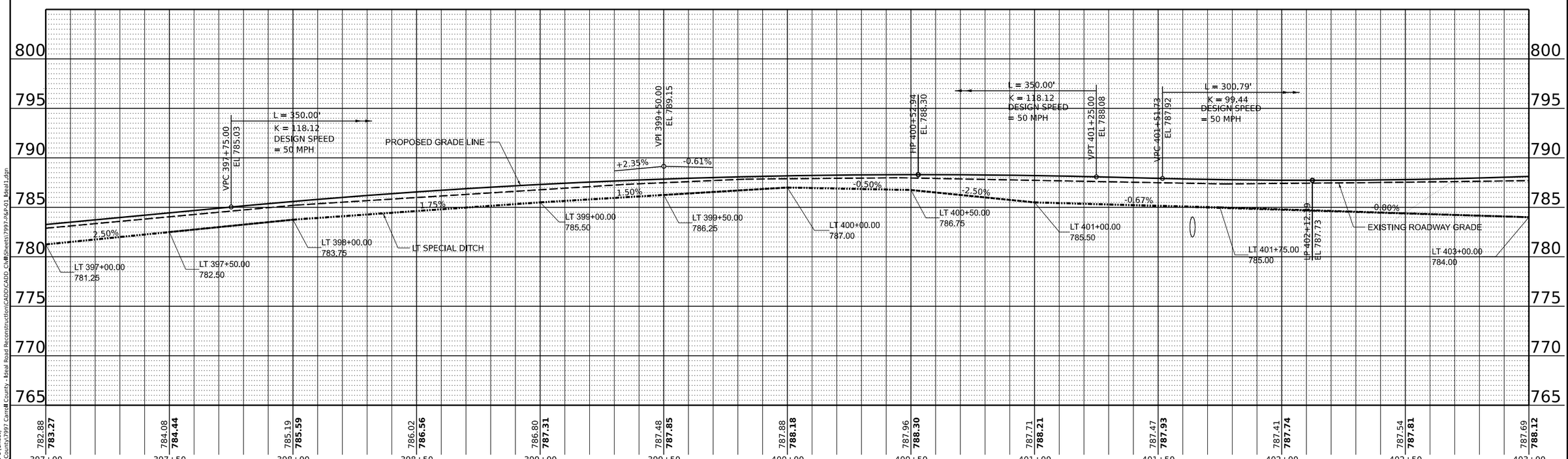

MODEL: Ideal_PR-6-1 [Sheet]
FILE NAME: S:\Proj_County\7997 Carroll County - Ideal Road Reconstruction\CADD\CADD_Civil\Sheets\7997-P&P-01 Ideal1.dgn

CHASTAIN & ASSOCIATES LLC
CONSULTING ENGINEERS

USER NAME = dwozniarski	DESIGNED -	REVISED -	
	DRAWN -	REVISED -	
PLOT SCALE = 0.167 ' / in.	CHECKED -	REVISED -	
PLOT DATE = 6/14/2024	DATE - 04/17/2024	REVISED -	

STATE OF ILLINOIS
DEPARTMENT OF TRANSPORTATION

IDEAL ROAD RECONSTRUCTION
PLAN AND PROFILE – IDEAL ROAD

SCALE: SCALE | SHEET 7 OF 46 SHEETS | STA. | TO STA.

F.A.S. RTE.	SECTION	COUNTY	TOTAL SHEETS	SHEET NO.
1084	20-00102-00-PV	CARROLL	217	26

CONTRACT NO. 85761

ILLINOIS | FED. AID PROJECT

85761

N

03-14-14-300-001
CAROLLYNN E. FINK
AND THOMAS A. FINK

STA. 403+76.9, 35' LT
60" DROP BOX STRUCTURE
RIM - 781.50
BOTTOM - 775.17

004PE3

STA. 403+61.97
OFF. 60.19' LT.

STA. 403+61.98
OFF. 40.19' LT.

PERMANENT
EASEMENT

STA. 403+91.97
OFF. 60.20' LT.

STA. 403+91.98
OFF. 40.20' LT.

STA 403+76.9
82 LF PIPE CULVERT
CLASS A, TYPE 2, 36"
PCFE SECTION, 36"
INV (39' LT) = 775.50
INV (55.5' RT) = 774.75

STA. 404+99.58
OFF. 60.28' LT.

STA. 404+99.61
OFF. 40.28' LT.

AGGREGATE SHOULDER, TYPE B, 4"

LIMITS OF CONSTRUCTION

LT SPECIAL DITCH

24' AGG FE

+08.96

004TE4

PAVEMENT RECLAMATION
SUBBASE GRANULAR MATERIAL, TYPE B, 8"
AGGREGATE BASE COURSE, TYPE B, 8"
FULL DEPTH RECLAMATION, 8"
ADD ROCK (AS NEEDED)
HOT MIX ASPHALT BINDER COURSE, IL-19.0, N50, 2 1/2"
HOT MIX ASPHALT SURFACE COURSE, IL-9.5, MIX D, N50, 1 1/2"

TEMPORARY EASEMENT

LIMITS OF CONSTRUCTION

STA. 408+93.87
OFF. 60.04' LT.

STA. 408+93.86
OFF. 50.04' LT.

EX. RIGHT OF WAY

403+00.00

MATCHLINE STA.

409+00.00

AGG

403 404 405+00 406 407 408

PC PI PT

PIPE CULVERT REMOVAL
30" CMP
72 LF

RT SPECIAL DITCH

005PE4

STA. 403+98.90
OFF. 39.79' RT.

005TE1

PERMANENT
EASEMENT

TEMPORARY EASEMENT

STA. 403+98.92
OFF. 74.79' RT.

STA. 404+48.91
OFF. 49.77' RT.

STA. 404+48.92
OFF. 74.77' RT.

PAVEMENT RECLAMATION
SUBBASE GRANULAR MATERIAL, TYPE B, 8"
AGGREGATE BASE COURSE, TYPE B, 8"
FULL DEPTH RECLAMATION, 8"
ADD ROCK (AS NEEDED)
HOT MIX ASPHALT BINDER COURSE, IL-19.0, N50, 2 1/2"
HOT MIX ASPHALT SURFACE COURSE, IL-9.5, MIX D, N50, 1 1/2"

TEMPORARY EASEMENT

03-14-23-100-004
EDWIN A. LIVENGOOD AND
KALI M. LIVENGOOD

PAVEMENT RECONSTRUCTION
SUBBASE GRANULAR MATERIAL, TYPE B, 8"
AGGREGATE BASE COURSE, TYPE B, 12"
FULL DEPTH RECLAMATION, 8"
HOT MIX ASPHALT BINDER COURSE, IL-19.0, N50, 2 1/2"
HOT MIX ASPHALT SURFACE COURSE, IL-9.5, MIX D, N50, 1 1/2"

0 20 40 60
SCALE IN FEET

FULL DEPTH RECLAMATION, 8" | +40 | FULL DEPTH RECONSTRUCTION

PR CURVE PRCL-DR
PI STA = 406+45.86
Δ = 00°48'10" (RT)
D = 00°12'32"
R = 27,444.00'
T = 192.25'
L = 384.49
E = 0.67'
e = ____
TR = ____
SE RUN = ____
PC STA = 404+53.62
PT STA = 408+38.11

FULL DEPTH RECONSTRUCTION | +92 | FULL DEPTH RECLAMATION, 8"

805 800 795 790 785 780 775 770

L = 300.79'
K = 99.44
DESIGN SPEED
= 50 MPH

VPT 404+52.52
EL 790.63

VPC 404+70.41
EL 791.07

L = 400.69'
K = 86.61
DESIGN SPEED
= 50 MPH

PROPOSED GRADE LINE

VPI 406+70.76
EL 795.90

HP 406+79.55
EL 793.59

+2.41%

2.21%

EXISTING ROADWAY GRADE

L = 400.69'
K = 86.61
DESIGN SPEED
= 50 MPH

VPT 408+71.10
EL 791.47

-.61%

-2.41%

-2.00%

VPI 403+02.15
EL 787.00

LT 403+00.00
784.00

LT 403+50.00
783.00

LT 403+76.90
781.5

-5.56%

LT RT 404+80.00
786.00

7.35%

3.70%

RT 405+50.00
790.00

LT SPECIAL DITCH

0.99%

2.00%

RT SPECIAL DITCH

2.00%

LT RT 406+50.00
792.00

RT 406+00.00
791.00

RT 406+75.00
792.50

RT 407+00.00
792.00

RT SPECIAL DITCH

2.00%

1.00%

LT RT 407+50.00
791.50

-1.50%

LT RT 408+00
790.75

LT SPECIAL DITCH

RT 408+50.00
789.50

-5.00%

-4.99%

LT 409+00
787.50

RT 409+00
788.00

787.69 **788.12** | 788.04 **788.69** | 788.75 **789.50** | 790.04 **790.57** | 791.40 **791.73** | 792.72 **792.62** | 793.71 **793.23** | 794.21 **793.54** | 794.40 **793.57** | 793.85 **793.30** | 792.66 **792.75** | 791.40 **791.91** | 790.20 **790.83**

403+00 403+50 404+00 404+50 405+00 405+50 406+00 406+50 407+00 407+50 408+00 408+50 409+00

MODEL: Ideal_PR-7-1 [Sheet]
File Name: ...\Carroll County\7997 Carroll County - Ideal Road Reconstruction\CADD\CADD_Civil\Sheets\7997-PSP-01_Ideal1.dgn

CHASTAIN & ASSOCIATES LLC
CONSULTING ENGINEERS

USER NAME = dwozniarski	DESIGNED -	REVISED -	
	DRAWN -	REVISED -	
PLOT SCALE = 0.167 ' / in.	CHECKED -	REVISED -	
PLOT DATE = 6/14/2024	DATE - 04/17/2024	REVISED -	

STATE OF ILLINOIS
DEPARTMENT OF TRANSPORTATION

IDEAL ROAD RECONSTRUCTION
PLAN AND PROFILE – IDEAL ROAD

SCALE: SCALE | SHEET 8 OF 46 SHEETS | STA. TO STA.

F.A.S. RTE.	SECTION	COUNTY	TOTAL SHEETS	SHEET NO.
1084	20-00102-00-PV	CARROLL	217	27

CONTRACT NO. 85761

ILLINOIS | FED. AID PROJECT

85761

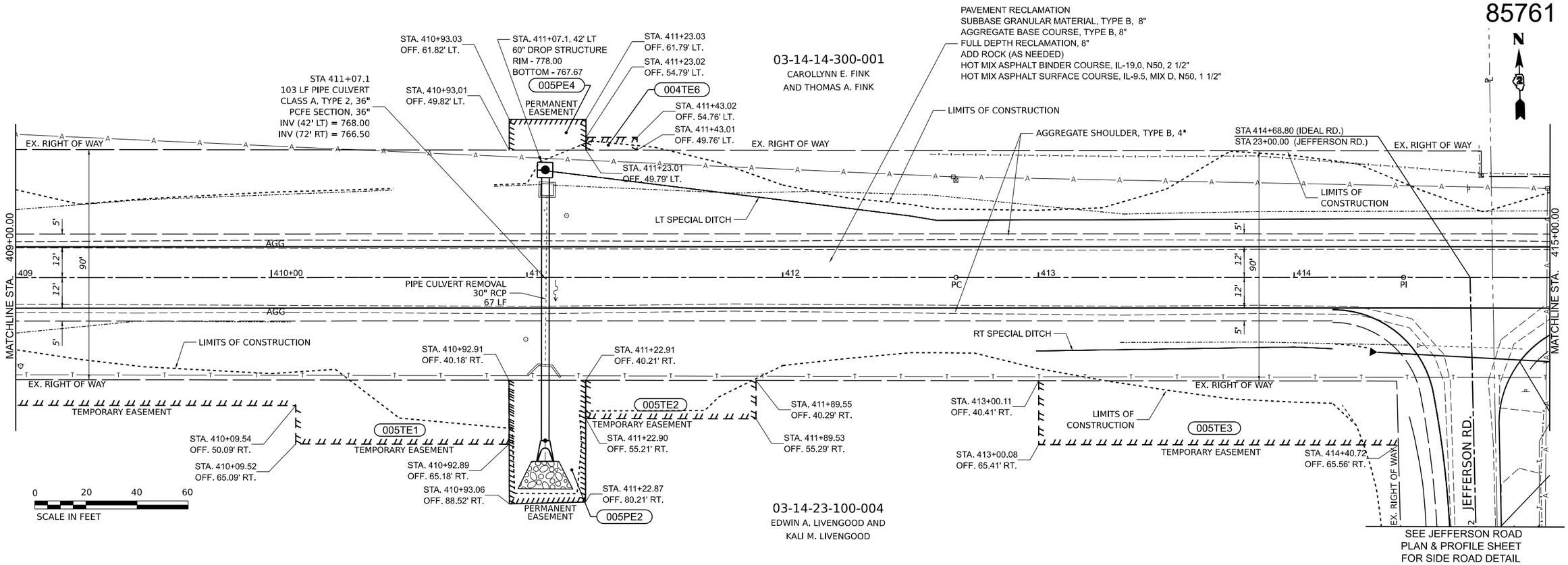

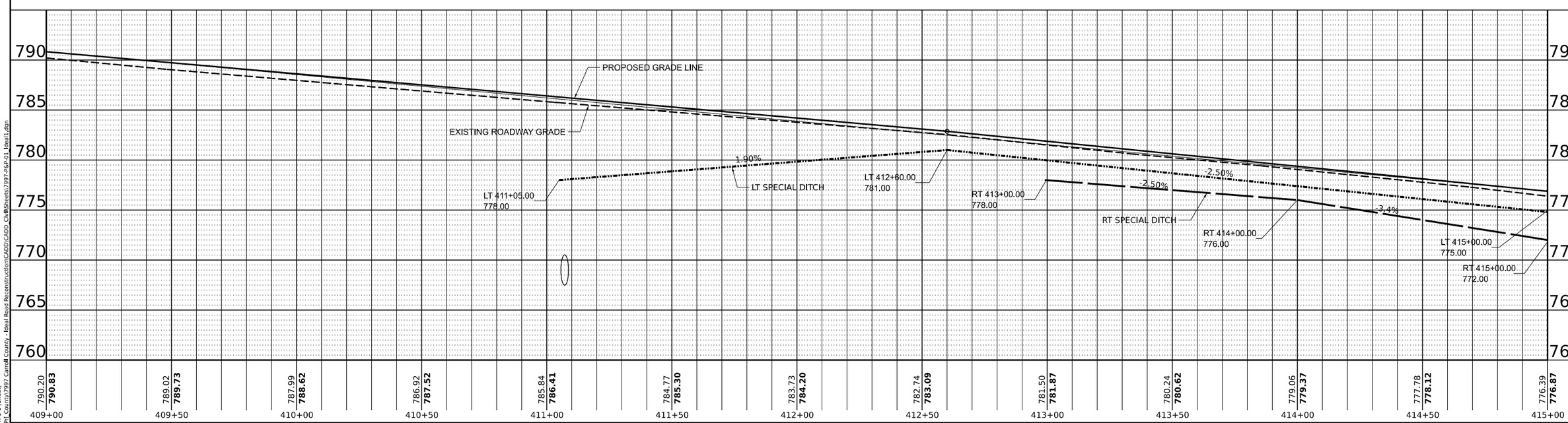

MODEL: Ideal_PR-8-1 [Sheet]
File name: ...Sign_County\7997 Carroll County - Ideal Road Reconstruction\CADD\CADD_Civil\Sheets\7997-PSP-01_Ideal1.dgn

CHASTAIN & ASSOCIATES LLC CONSULTING ENGINEERS	USER NAME = dwozniarski	DESIGNED -	REVISED -	STATE OF ILLINOIS DEPARTMENT OF TRANSPORTATION	IDEAL ROAD RECONSTRUCTION PLAN AND PROFILE – IDEAL ROAD
		DRAWN -	REVISED -		
	PLOT SCALE = 0.167 ' / in.	CHECKED -	REVISED -		
	PLOT DATE = 6/14/2024	DATE - 04/17/2024	REVISED -		SCALE: SCALE SHEET 9 OF 46 SHEETS STA. TO STA.

F.A.S. RTE.	SECTION	COUNTY	TOTAL SHEETS	SHEET NO.
1084	20-00102-00-PV	CARROLL	217	28
		CONTRACT NO. 85761		
		ILLINOIS	FED. AID PROJECT	

85761

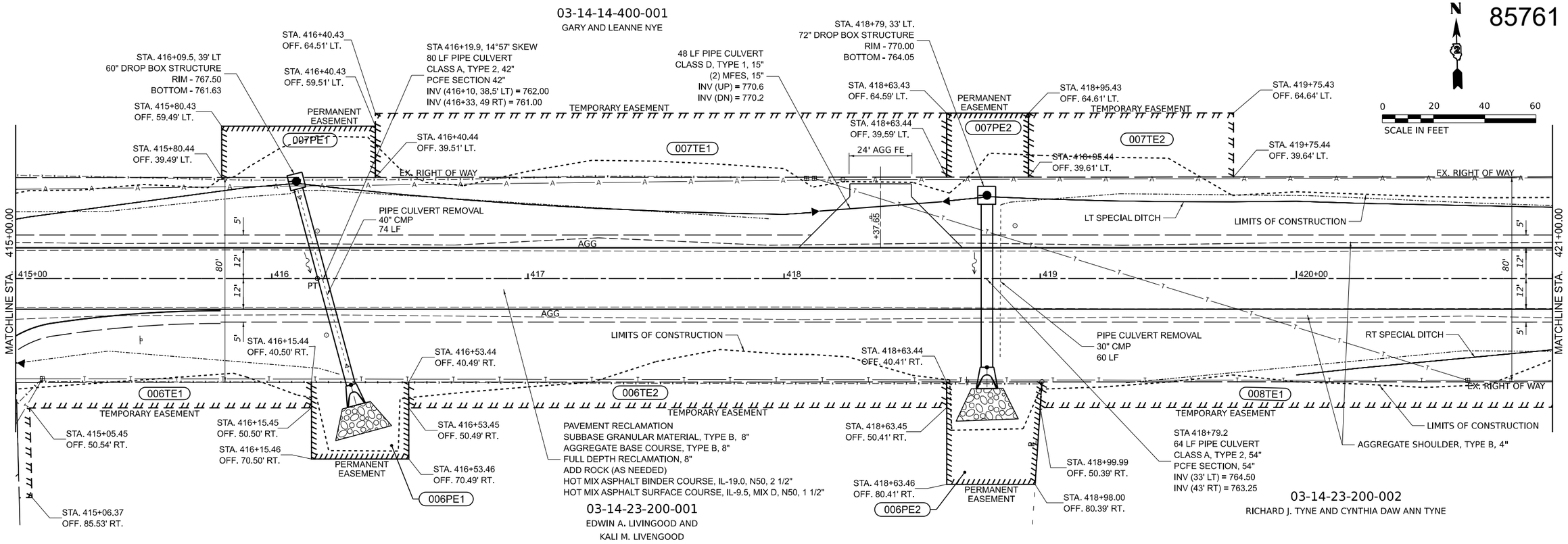

MODEL: Ideal_PR-9-1 [Sheet]
FILE NAME: R:\Proj_County\7997 Carroll County - Ideal Road Reconstruction\CADD\CADD_Civil\Sheets\7997-P&P-01_Ideal1.dgn

CHASTAIN & ASSOCIATES LLC
CONSULTING ENGINEERS

USER NAME = dwozniarski	DESIGNED -	REVISED -	
	DRAWN -	REVISED -	
PLOT SCALE = 0.167 ' / in.	CHECKED -	REVISED -	
PLOT DATE = 6/14/2024	DATE - 04/17/2024	REVISED -	

STATE OF ILLINOIS
DEPARTMENT OF TRANSPORTATION

IDEAL ROAD RECONSTRUCTION
PLAN AND PROFILE – IDEAL ROAD

SCALE: SCALE | SHEET 10 OF 46 SHEETS | STA. TO STA.

F.A.S. RTE.	SECTION	COUNTY	TOTAL SHEETS	SHEET NO.
1084	20-00102-00-PV	CARROLL	217	29

CONTRACT NO. 85761

ILLINOIS | FED. AID PROJECT

85761

N

03-14-14-400-001
GARY AND LEANNE NYE

PAVEMENT RECLAMATION
SUBBASE GRANULAR MATERIAL, TYPE B, 8"
AGGREGATE BASE COURSE, TYPE B, 8"
ADD ROCK (AS NEEDED)
HOT MIX ASPHALT BINDER COURSE, IL-19.0, N50, 2 1/2"
HOT MIX ASPHALT SURFACE COURSE, IL-9.5, MIX D, N50, 1 1/2"

STA. 421+35.99
OFF. 51.70' LT.

STA. 421+36.00
OFF. 39.70' LT.

AGGREGATE SHOULDER TYPE B, 4"

TEMPORARY EASEMENT

007TE3

EX. RIGHT OF WAY

LT SPECIAL DITCH

LIMITS OF CONSTRUCTION

STA. 425+07.79
OFF. 51.85' LT.

STA. 425+07.80
OFF. 39.85' LT.

007PE3

PERMANENT EASEMENT

STA. 425+63.99
OFF. 51.88' LT.

STA. 425+64.00
OFF. 39.88' LT.

STA. 425+33.9
69 LF PIPE CULVERT
CLASS A, TYPE 2, 24"
(2) PCFE SECTIONS, 24"
INV (48' RT) = 791.0
INV (33' LT) = 796.0

EX. RIGHT OF WAY

LIMITS OF CONSTRUCTION

MATCHLINE STA. 421+00.00

MATCHLINE STA. 427+00.00

5'
12'
12'
5'
80'

AGG

421 422 423 424 425+00 426

PT
179°59'44"

PIPE CULVERT REMOVAL
24" CMP
58 LF

LIMITS OF CONSTRUCTION

EX. RIGHT OF WAY

008TE1

STA. 421+88.08
OFF. 40.28' RT.

STA. 421+88.08
OFF. 50.28' RT.

TEMPORARY EASEMENT

STA. 424+62.00
OFF. 40.17' RT.

STA. 424+62.00
OFF. 58.17' RT.

008TE2

TEMPORARY EASEMENT

STA. 425+17.00
OFF. 40.15' RT.

STA. 425+17.00
OFF. 58.15' RT.

STA. 425+17.00
OFF. 60.15' RT.

PERMANENT EASEMENT

008PE1

STA. 425+47.00
OFF. 40.13' RT.

STA. 425+47.00
OFF. 50.13' RT.

STA. 425+47.00
OFF. 60.13' RT.

008TE3

TEMPORARY EASEMENT

STA. 426+22.00
OFF. 40.10' RT.

STA. 426+22.00
OFF. 50.10' RT.

EX. RIGHT OF WAY

0 20 40 60
SCALE IN FEET

03-14-23-200-002
RICHARD J. TYNE & CYNTHIA DAW ANN TYNE

805 800 795 790 785 780 775 770

DESIGN SPEED = 50 MPH

VPT 425+70.00
EL. 802.2

VPC 426+
EL. 8

DESIGN SPEED
= 50 MPH

VPI 424+00.00
EL 800.52

PROPOSED GRADE LINE

L = 340.00'
K = 86.16
DESIGN SPEED = 50 MPH

VPC 422+30.00
EL 791.47

+5.32%

+1.37%

LT SPECIAL
DITCH

2.5%

-1.00%

-5.90%

-12.5%

4.6%

6.5%

LT 425+50.00
797.50

LT 424+50.00
798.00

LT 425+00.00
797.50

LT 424+00.00
796.75

LT 425+34.00
796.00

EXISTING ROADWAY GRADE

LT 422+00.00
787.50

LT 421+00.00
781.00

783.92 **784.56** 786.71 **787.22** 789.54 **789.88** 792.20 **792.51** 794.63 **794.91** 796.76 **797.02** 798.59 **798.84** 800.12 **800.37** 801.13 **801.61** 802.02 **802.56** 802.84 **803.27** 803.37 **803.96** 804.02 **804.61**

421+00 421+50 422+00 422+50 423+00 423+50 424+00 424+50 425+00 425+50 426+00 426+50 427+00

MODEL: Ideal_PR-10-1 [Sheet]
FILE NAME: R:\Proj_County\1997 Carroll County - Ideal Road Reconstruction\CADD\CADD_Civil\Sheets\1997-P&P-01_Ideal2.dgn

CHASTAIN & ASSOCIATES LLC
CONSULTING ENGINEERS

USER NAME = dwozniarski	DESIGNED -	REVISED -	
	DRAWN -	REVISED -	
PLOT SCALE = 0.167 ' / in.	CHECKED -	REVISED -	
PLOT DATE = 6/14/2024	DATE - 04/17/2024	REVISED -	

STATE OF ILLINOIS
DEPARTMENT OF TRANSPORTATION

IDEAL ROAD RECONSTRUCTION
PLAN AND PROFILE – IDEAL ROAD

SCALE: SCALE | SHEET 11 OF 46 SHEETS | STA. TO STA.

F.A.S. RTE.	SECTION	COUNTY	TOTAL SHEETS	SHEET NO.
1084	20-00102-00-PV	CARROLL	217	30

CONTRACT NO. 85761

ILLINOIS | FED. AID PROJECT

85761

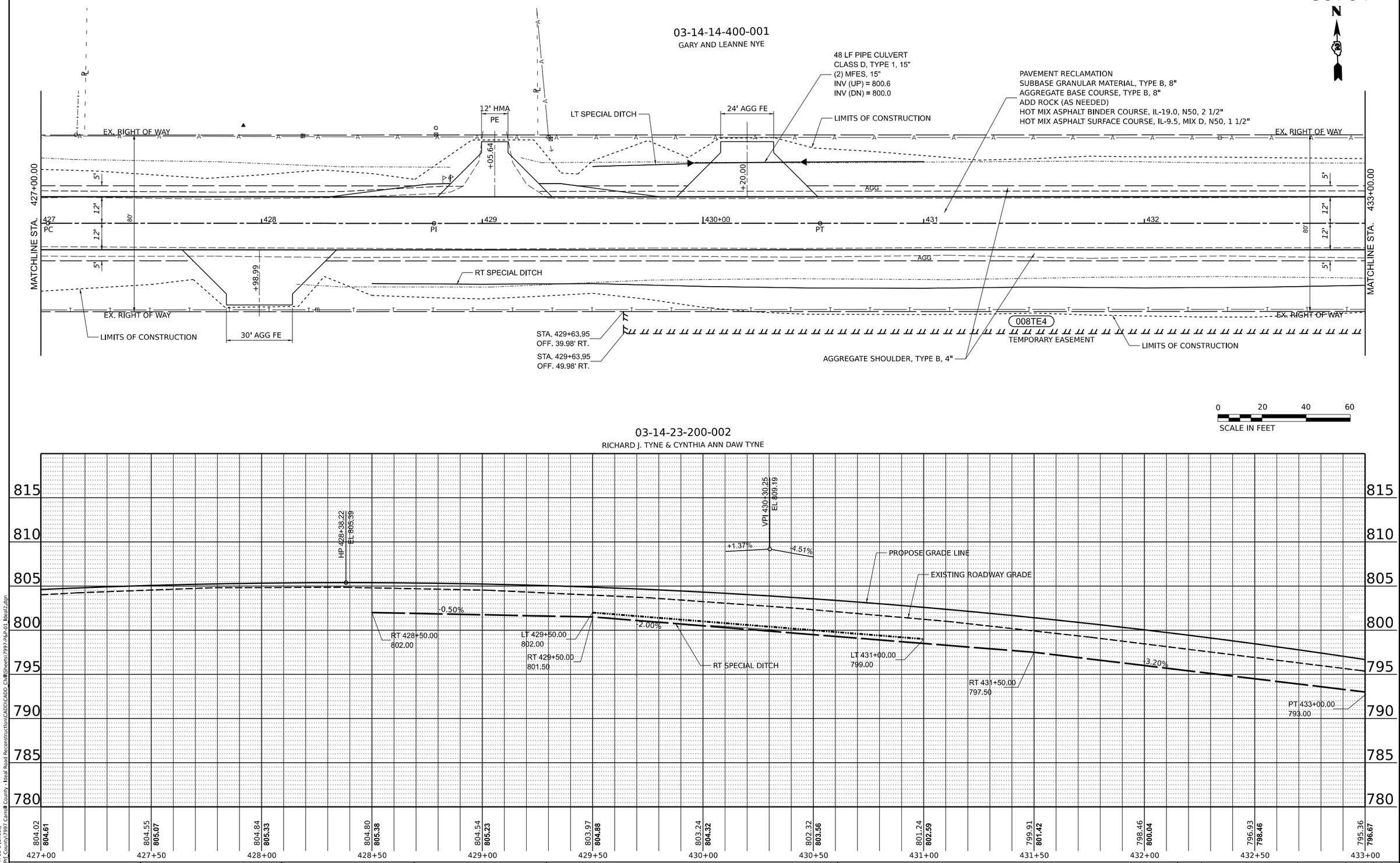

MODEL: Ideal_PR-11-1 [Sheet]
FILE NAME: S:\Civil\Carroll County - Ideal Road Reconstruction\CADD\CADD_Civil\Sheets\7997-P&P-01 Ideal2.dgn

CHASTAIN & ASSOCIATES LLC
CONSULTING ENGINEERS

USER NAME = dwozniarski	DESIGNED -	REVISED -	
	DRAWN -	REVISED -	
PLOT SCALE = 0.167 ' / in.	CHECKED -	REVISED -	
PLOT DATE = 6/14/2024	DATE - 04/17/2024	REVISED -	

STATE OF ILLINOIS
DEPARTMENT OF TRANSPORTATION

IDEAL ROAD RECONSTRUCTION
PLAN AND PROFILE – IDEAL ROAD

SCALE: SCALE | SHEET 12 OF 46 SHEETS | STA. | TO STA.

F.A.S. RTE.	SECTION	COUNTY	TOTAL SHEETS	SHEET NO.
1084	20-00102-00-PV	CARROLL	217	31

CONTRACT NO. 85761

ILLINOIS | FED. AID PROJECT

85761

PR CURVE PRCL
PI STA = 438+06.03
Δ = 00°40'44" (RT)
D = 00°11'36"
R = 29,615.00'
T = 175.47'
L = 350.93
E = 0.52'
e = ____
TR = ____
SE RUN = ____
PC STA = 436+30.56
PT STA = 439+81.49

03-14-23-200-002
GARY AND LEANNE NYE

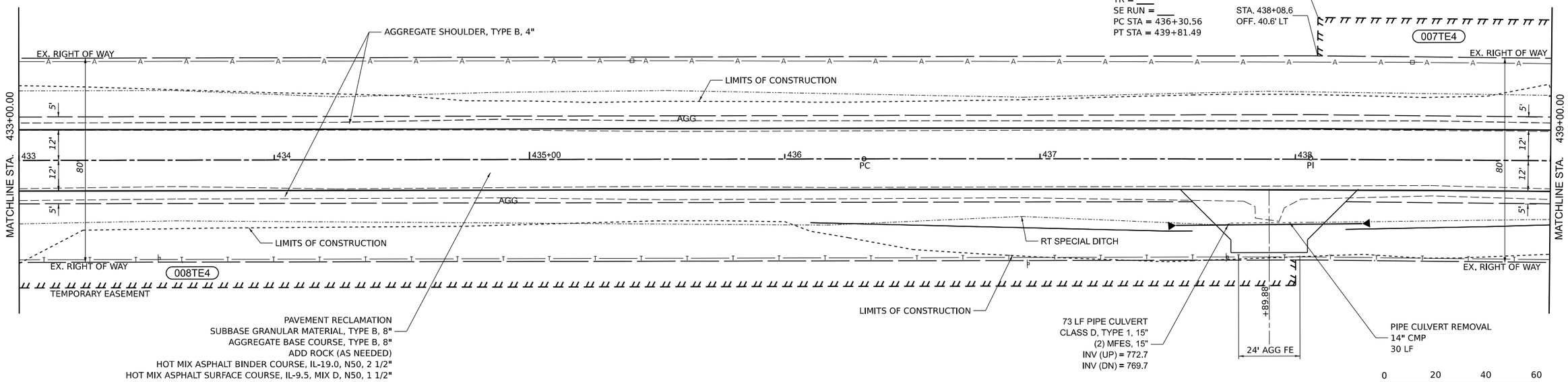

03-14-23-200-002
RICHARD J. TYNE & CYNTHIA DAW ANN TYNE

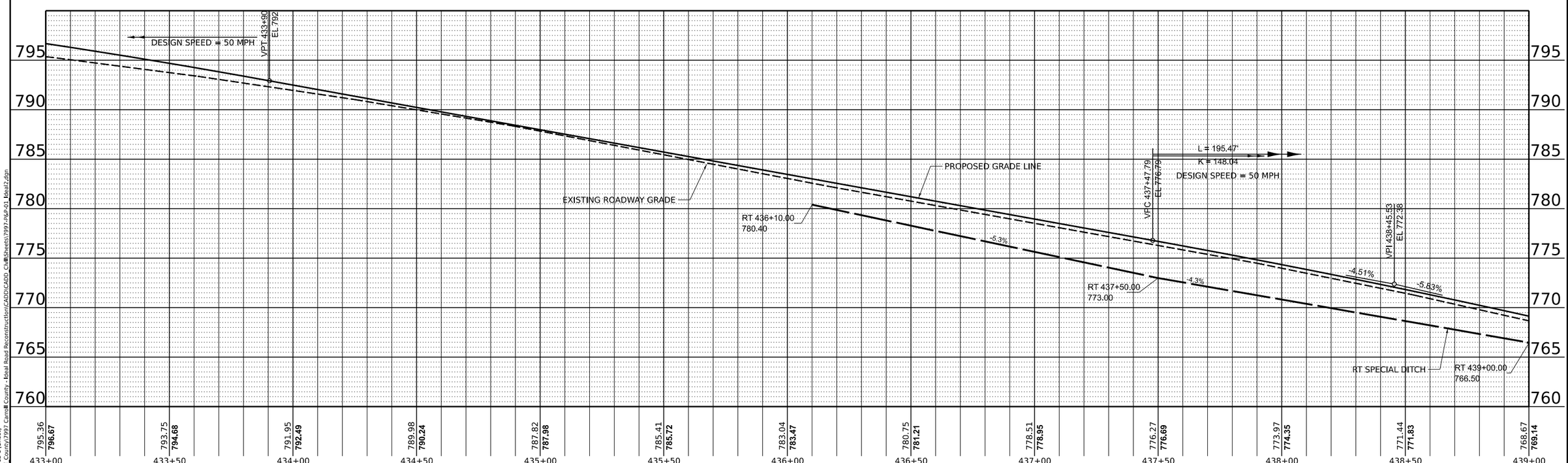

MODEL: Ideal_PR-12-1 [Sheet]
FILE NAME: S:\Proj\County\1997 Carroll County - Ideal Road Reconstruction\CADD\CADD_Civil\Sheets\1997-P&P-01 Ideal2.dgn

CHASTAIN & ASSOCIATES LLC
CONSULTING ENGINEERS

USER NAME = dwozniarski	DESIGNED -	REVISED -	
	DRAWN -	REVISED -	
PLOT SCALE = 0.167 ' / in.	CHECKED -	REVISED -	
PLOT DATE = 6/14/2024	DATE - 04/17/2024	REVISED -	

STATE OF ILLINOIS
DEPARTMENT OF TRANSPORTATION

IDEAL ROAD RECONSTRUCTION
PLAN AND PROFILE – IDEAL ROAD

SCALE: SCALE | SHEET 13 OF 46 SHEETS | STA. | TO STA.

F.A.S. RTE.	SECTION	COUNTY	TOTAL SHEETS	SHEET NO.
1084	20-00102-00-PV	CARROLL	217	32

CONTRACT NO. 85761
ILLINOIS | FED. AID PROJECT

85761

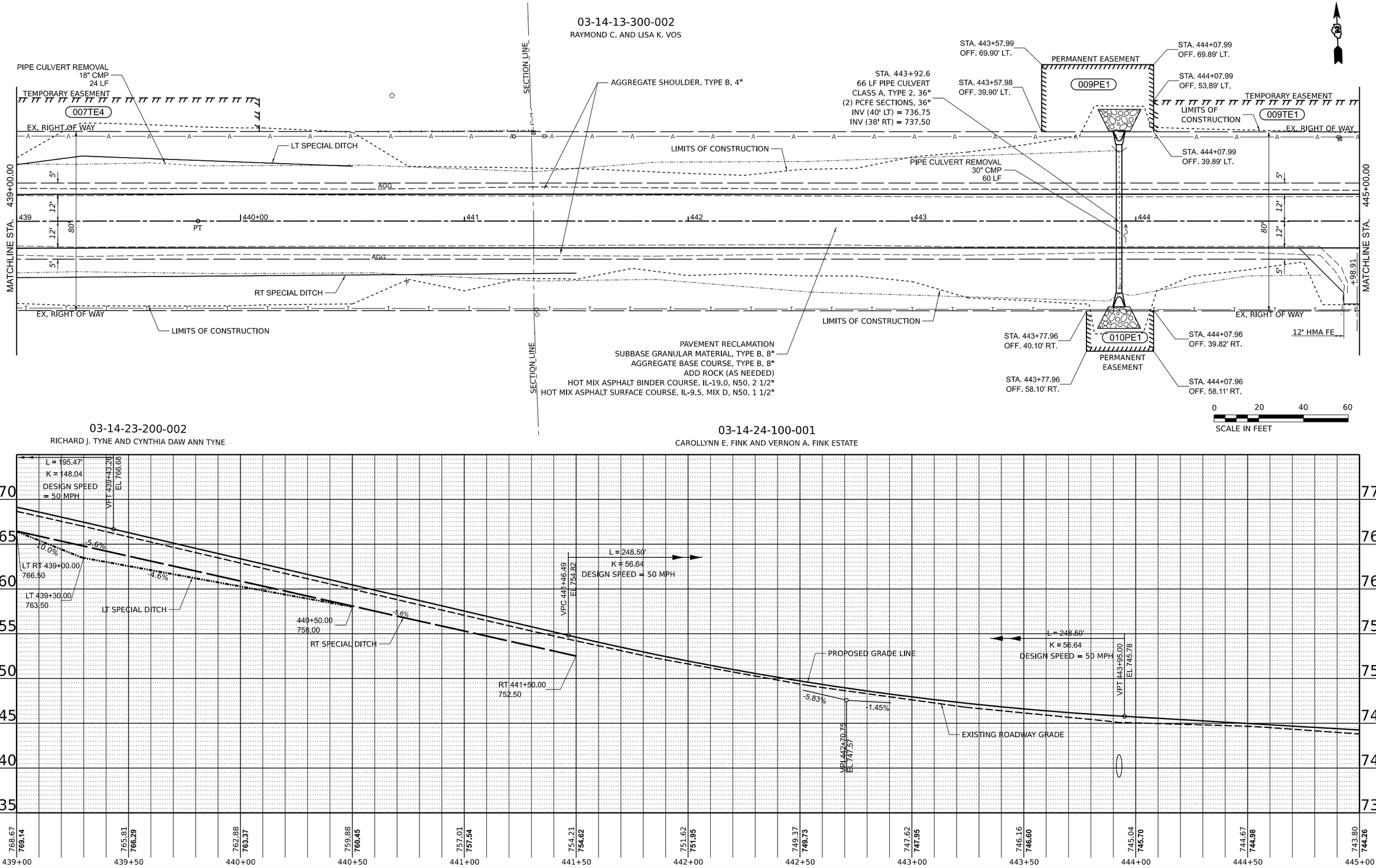

MODEL: Ideal_PR-13-1 [Sheet]
FILE NAME: R:\Proj_County\1997_Carroll County - Ideal Road Reconstruction\CADD\CADD_Civil\Sheets\1997-R&P-01_Ideal2.dgn

CHASTAIN & ASSOCIATES LLC
CONSULTING ENGINEERS

USER NAME = dwozniarski	DESIGNED -	REVISED -	
	DRAWN -	REVISED -	
PLOT SCALE = 0.167 ' / in.	CHECKED -	REVISED -	
PLOT DATE = 6/14/2024	DATE - 04/17/2024	REVISED -	

STATE OF ILLINOIS
DEPARTMENT OF TRANSPORTATION

IDEAL ROAD RECONSTRUCTION
PLAN AND PROFILE – IDEAL ROAD

SCALE: SCALE | SHEET 14 OF 46 SHEETS | STA. TO STA.

F.A.S. RTE.	SECTION	COUNTY	TOTAL SHEETS	SHEET NO.
1084	20-00102-00-PV	CARROLL	217	33

CONTRACT NO. 85761

ILLINOIS | FED. AID PROJECT

85761

N

03-14-13-300-002
RAYMOND C. AND LISA K. VOS

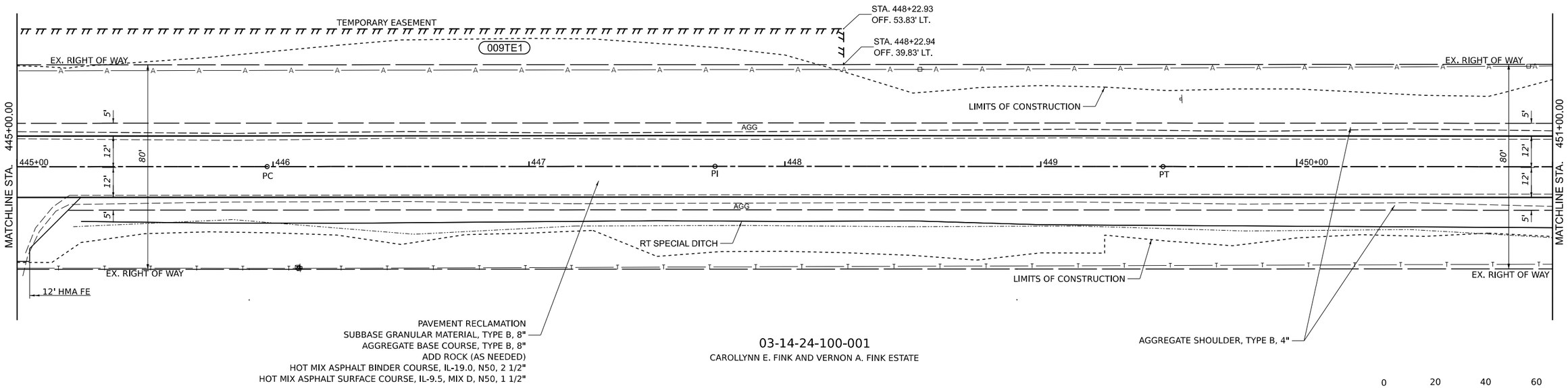

03-14-24-100-001
CAROLLYNN E. FINK AND VERNON A. FINK ESTATE

0 20 40 60
SCALE IN FEET

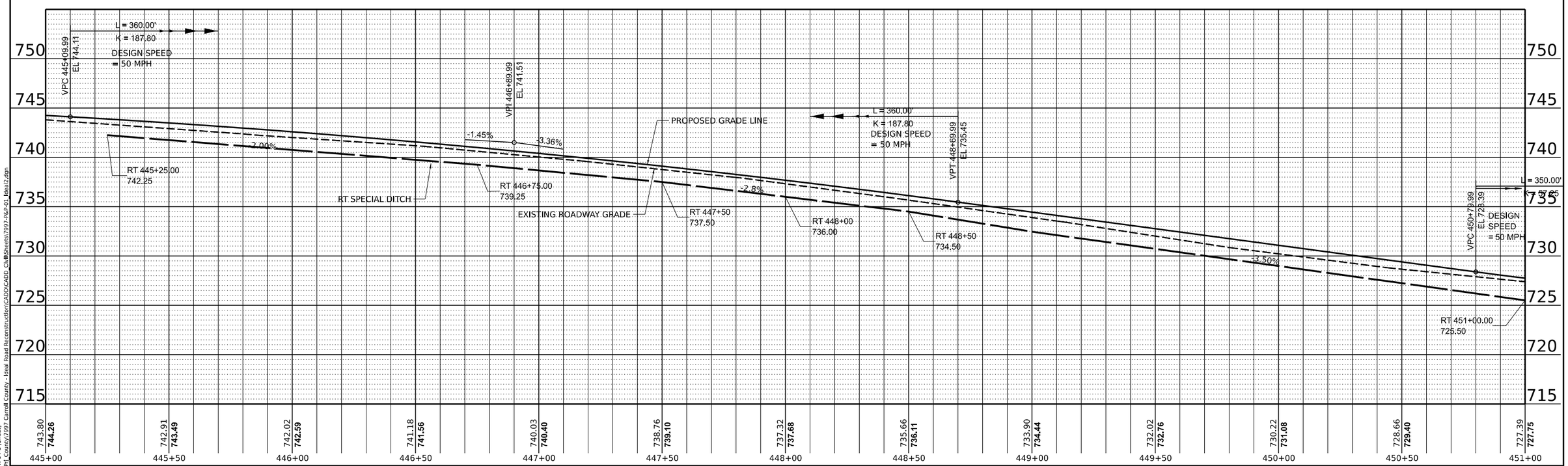

MODEL: Ideal_PR-14-1 [Sheet]
FILE NAME: R:\Proj_County\1997_Carroll County - Ideal Road Reconstruction\CADD\CADD_Civil\Sheets\1997-P&P-01_Ideal2.dgn

CHASTAIN & ASSOCIATES LLC CONSULTING ENGINEERS	USER NAME = dwozniarski	DESIGNED -	REVISED -	STATE OF ILLINOIS DEPARTMENT OF TRANSPORTATION	IDEAL ROAD RECONSTRUCTION PLAN AND PROFILE – IDEAL ROAD	F.A.S. RTE.	SECTION	COUNTY	TOTAL SHEETS / SHEET NO.
		DRAWN -	REVISED -			1084	20-00102-00-PV	CARROLL	217 / 34
	PLOT SCALE = 0.167 ' / in.	CHECKED -	REVISED -					CONTRACT NO. 85761	
	PLOT DATE = 6/14/2024	DATE - 04/17/2024	REVISED -		SCALE: SCALE / SHEET 15 OF 46 SHEETS / STA. / TO STA.			ILLINOIS / FED. AID PROJECT	

85761

03-14-13-300-002
RAYMOND AND LISA VOS

PAVEMENT RECLAMATION
SUBBASE GRANULAR MATERIAL, TYPE B, 8"
AGGREGATE BASE COURSE, TYPE B, 8"
ADD ROCK (AS NEEDED)
HOT MIX ASPHALT BINDER COURSE, IL-19.0, N50, 2 1/2"
HOT MIX ASPHALT SURFACE COURSE, IL-9.5, MIX D, N50, 1 1/2"

SEE SCHOOL ROAD PLAN & PROFILE SHEET
FOR SIDE ROAD DETAIL

03-14-13-100-003
MARILYN KAY ANDRESEN RESIDUARY
TRUST AND HAROLD ANDRESEN

STA. 451+83.07
OFF. 70.12' LT.
STA. 451+83.09
OFF. 40.12' LT.
PERMANENT EASEMENT
STA. 452+53.07
OFF. 70.17' LT.
STA 452+56, 34° SKEW
6'X5' C1PC BOX CULVERT
SEE CULVERT DETAIL (S.N. 452+56)
INV (452+28.64, 40.45' LT) =711.50
INV (452+83.80, 41.50' RT) =711.00
009PE2
STA. 452+53.09
OFF. 40.17' LT.
LIMITS OF CONSTRUCTION
009TE3
STA. 454+16.84
OFF. 40.33' LT.
TEMPORARY EASEMENT
SCHOOL RD.
R=400.00'
PERMANENT EASEMENT
STA. 455+17.17
OFF. 62.38' LT.
PERMANENT EASEMENT
LIMITS OF CONSTRUCTION
011TE1
EX. RIGHT OF WAY
EX. RIGHT OF WAY
LT SPECIAL DITCH
AGGREGATE SHOULDER, TYPE B, 4"
MATCHLINE STA. 451+00.00
MATCHLINE STA. 457+00.00
AGG
451 452 453 454 455+00 456
30+00
PC
PIPE CULVERT REMOVAL
18" CMP
REMOVAL OF EXISTING STRUCTURE, NO. 3
RT SPECIAL DITCH
STA 454+59.62 (IDEAL RD.)
STA 30+00.00 (SCHOOL RD)
RT SPECIAL DITCH
EX. RIGHT OF WAY
EX. RIGHT OF WAY
STA. 451+49.78
OFF. 39.91' RT.
LIMITS OF CONSTRUCTION
STA. 452+64.78
OFF. 39.82' RT.
010PE2
STA. 453+49.78
OFF. 39.75' RT.
PAVEMENT RECONSTRUCTION
SUBBASE GRANULAR MATERIAL, TYPE B, 8"
AGGREGATE BASE COURSE, TYPE B, 12"
FULL DEPTH RECLAMATION, 8"
HOT MIX ASPHALT BINDER COURSE, IL-19.0, N50, 2 1/2"
HOT MIX ASPHALT SURFACE COURSE, IL-9.5, MIX D, N50, 1 1/2"
38 LF PIPE CULVERT
CLASS D, TYPE 1, 15"
(2) MFES, 15"
INV (UP) = 728.6
INV (DN) = 727.3
+86.55
20' AGG FE
PIPE CULVERT REMOVAL
12" CMP
19 LF
010TE4
STA. 451+49.81
OFF. 79.91' RT.
TEMPORARY EASEMENT
0 20 40 60
SCALE IN FEET
STA. 452+64.81
OFF. 79.82' RT.
STA. 452+64.82
OFF. 89.82' RT.
PERMANENT EASEMENT
STA. 453+49.82
OFF. 89.75' RT.
03-14-24-100-001
CAROLLYNN E. FINK AND
VERNON A. FINK ESTATE
+57
FULL DEPTH RECLAMATION, 8"
FULL DEPTH RECONSTRUCTION

740 735 730 725 720 715 710 705

L = 350.00'
K = 57.25
DESIGN SPEED = 50 MPH
VPI 452+54.99
EL 722.50
VFT 454+29.99
EL 727.31
VPC 454+83.38
EL 728.78
L = 852.78'
K = 120.57
DESIGN SPEED = 50 MPH
PROPOSED GRADE LINE
EXISTING ROADWAY GRADE
RT 451+00.00
725.50
RT 451+50.00
724.00
RT SPECIAL DITCH
4.20%
RT 452+20.00
720.50
-3.36%
+2.75%
LP 452+72.57
EL 725.15
LT SPECIAL DITCH
4.00%
3.30%
RT 455+00.00
725.00
LT 454+90.00
725.00
RT SPECIAL DITCH
LT 456+00.00
729.00
2.00%
LT RT 456+50.00
730.00
1.00%
0.80%
RT 457+00.00
730.50

727.39 **727.75** 451+00
725.97 **726.46** 451+50
724.81 **725.61** 452+00
724.07 **725.19** 452+50
724.03 **725.21** 453+00
724.61 **725.67** 453+50
725.82 **726.57** 454+00
727.22 **727.86** 454+50
728.90 **729.23** 455+00
730.39 **730.43** 455+50
731.75 **731.42** 456+00
732.85 **732.21** 456+50
733.73 **732.79** 457+00

MODEL: Ideal_PR-15-1 [Sheet]
FILE NAME: S:\Fink County\7997 Carroll County - Ideal Road Reconstruction\CADD\CADD_Civil\Sheets\7997-P&P-01_Ideal2.dgn

CHASTAIN & ASSOCIATES LLC
CONSULTING ENGINEERS

USER NAME = dwozniarski	DESIGNED -	REVISED -	
	DRAWN -	REVISED -	
PLOT SCALE = 0.167 ' / in.	CHECKED -	REVISED -	
PLOT DATE = 6/14/2024	DATE - 04/17/2024	REVISED -	

STATE OF ILLINOIS
DEPARTMENT OF TRANSPORTATION

IDEAL ROAD RECONSTRUCTION
PLAN AND PROFILE – IDEAL ROAD

SCALE: SCALE | SHEET 16 OF 46 SHEETS | STA. TO STA.

F.A.S. RTE.	SECTION	COUNTY	TOTAL SHEETS	SHEET NO.
1084	20-00102-00-PV	CARROLL	217	35

CONTRACT NO. 85761
ILLINOIS | FED. AID PROJECT

85761

N

PAVEMENT RECONSTRUCTION
SUBBASE GRANULAR MATERIAL, TYPE B, 8"
AGGREGATE BASE COURSE, TYPE B, 12"
FULL DEPTH RECLAMATION, 8"
HOT MIX ASPHALT BINDER COURSE, IL-19.0, N50, 2 1/2"
HOT MIX ASPHALT SURFACE COURSE, IL-9.5, MIX D, N50, 1 1/2"

03-14-13-100-003
MARILYN KAY ANDRESEN RESIDUARY TRUST
AND HAROLD ANDRESEN

LIMITS OF CONSTRUCTION

PERMANENT EASEMENT

STA. 460+17.28
OFF. 62.47' LT.

STA. 460+17.27
OFF. 52.47' LT.

011TE1

PAVEMENT RECLAMATION
SUBBASE GRANULAR MATERIAL, TYPE B, 8"
AGGREGATE BASE COURSE, TYPE B, 8"
ADD ROCK (AS NEEDED)
HOT MIX ASPHALT BINDER COURSE, IL-19.0, N50, 2 1/2"
HOT MIX ASPHALT SURFACE COURSE, IL-9.5, MIX D, N50, 1 1/2"

TEMPORARY EASEMENT

EX. RIGHT OF WAY

LT SPECIAL DITCH

MATCHLINE STA. 457+00.00

MATCHLINE STA. 463+00.00

5' 12' 12' 80' 5'

AGG

457 458 PI 459 460+00 PT 461 462

RT SPECIAL DITCH

EX. RIGHT OF WAY

AGGREGATE SHOULDER

LIMITS OF CONSTRUCTION

03-14-24-100-001
CAROLLYNN E. FINK AND
VERNON A. FINK ESTATE

0 20 40 60
SCALE IN FEET

FULL DEPTH RECONSTRUCTION | +27 | FULL DEPTH RECLAMATION, 8"

745 740 735 730 725 720 715 710

HP 458+14.94
EL 733.34

VPI 459+09.77
EL 740.51

+2.75% -4.32%

EXISTING ROADWAY LINE

PROPOSED GRADE LINE

0.80% 0.80% -1.10% -1.50% -2.40% -3.60% -4.30%

LT RT 457+00.00
730.50

LT & RT SPECIAL DITCH

LT RT 458+50.00
731.50

LT RT 459+50.00
730.35

LT & RT SPECIAL DITCH

LT RT 460+50.00
728.82

LT RT 461+50.00
726.47

RT SPECIAL DITCH

LT 463+00.00
721.00

RT 463+00.00
720.00

733.73	**732.79**	734.56	**733.16**	735.23	**733.33**	735.55	**733.29**	735.34	**733.04**	734.75	**732.58**	733.79	**731.92**	732.57	**731.05**	731.03	**729.97**	729.33	**728.68**	727.47	**727.19**	725.48	**725.49**	723.31	**723.58**
457+00		457+50		458+00		458+50		459+00		459+50		460+00		460+50		461+00		461+50		462+00		462+50		463+00	

MODEL: Ideal_PR-16-1 [Sheet]
FILE NAME: R:\Proj_County\7997 Carroll County - Ideal Road Reconstruction\CADD\CADD_Civil\Sheets\7997-P&P-01 Ideal2.dgn

CHASTAIN & ASSOCIATES LLC
CONSULTING ENGINEERS

USER NAME = dwozniarski	DESIGNED -	REVISED -	
	DRAWN -	REVISED -	
PLOT SCALE = 0.167 ' / in.	CHECKED -	REVISED -	
PLOT DATE = 6/14/2024	DATE - 04/17/2024	REVISED -	

STATE OF ILLINOIS
DEPARTMENT OF TRANSPORTATION

IDEAL ROAD RECONSTRUCTION
PLAN AND PROFILE – IDEAL ROAD

SCALE: SCALE | SHEET 17 OF 46 SHEETS | STA. | TO STA.

F.A.S. RTE.	SECTION	COUNTY	TOTAL SHEETS	SHEET NO.
1084	20-00102-00-PV	CARROLL	217	36

CONTRACT NO. 85761

ILLINOIS | FED. AID PROJECT

03-14-13-100-003
MARILYN KAY ANDRESEN
RESIDUARY TRUST
AND HAROLD ANDRESEN

03-14-13-400-001
CAROLLYNN E. FINK ET AL

03-14-24-100-001
CAROLLYNN E. FINK AND
VERNON A. FINK ESTATE

STA. 463+57.27
OFF. 52.15' LT.
STA. 463+57.26
OFF. 40.15' LT.
TEMPORARY EASEMENT
EX. RIGHT OF WAY

PAVEMENT RECLAMATION
SUBBASE GRANULAR MATERIAL, TYPE B, 8"
AGGREGATE BASE COURSE, TYPE B, 8"
ADD ROCK (AS NEEDED)
HOT MIX ASPHALT BINDER COURSE, IL-19.0, N50, 2 1/2"
HOT MIX ASPHALT SURFACE COURSE, IL-9.5, MIX D, N50, 1 1/2"

STA 467+42.9, 18°30' SKEW
(2) 8'X8' CIPC BOX CULVERT
SEE CULVERT DETAIL (SN 467+43)
INV (467+30.96, 35.99' LT) = 695.65
INV (467+55.04, 36.46' RT) = 695.50

STA. 466+74.16
OFF. 74.76' LT.
STA. 466+74.06
OFF. 39.76' LT.
PERMANENT EASEMENT
011PE1
SECTION LINE
STA. 467+80.35
OFF. 74.33' LT.
STA. 467+80.35
OFF. 47.23' LT.
012TE1
TEMPORARY EASEMENT
EX. RIGHT OF WAY

LIMITS OF CONSTRUCTION
REMOVAL OF EXISTING STRUCTURE, NO. 4

MATCHLINE STA. 463+00.00
MATCHLINE STA. 469+00.00
5'
12'
12'
80'
AGG
463
464
465+00
PC
466
467
PI
468

STA. 467+26.30
OFF. 40.42' RT.
STA. 468+06.23
OFF. 40.40' RT.
STA. 466+96.33
OFF. 40.31' RT.
STA. 466+96.31
OFF. 45.31' RT.
010TE5
STA. 467+26.28
OFF. 45.42' RT.
STA. 468+06.27
OFF. 52.40' RT.
013TE1
STA. 467+84.77
OFF. 100.48' RT.
STA. 468+06.43
OFF. 100.40' RT.
010PE3
STA. 467+26.06
OFF. 100.42' RT.
PERMANENT EASEMENT

PR CURVE PRCL-DR
PI STA = 467+61.06
Δ = 00°28'28" (LT)
D = 00°07'23"
R = 46,604.00'
T = 193.01'
L = 386.01'
E = 0.40'
e = ____
TR = ____
SE RUN = ____
PC STA = 465+68.06
PT STA = 469+54.07

0 20 40 60
SCALE IN FEET

L = 852.78'
K = 153.31
DESIGN SPEED = 50 MPH
VPI 463+36.16
EL 722.07
L = 503.38'
K = 68.35
DESIGN SPEED = 50 MPH
VPC 464+42.21
EL 717.49
PROPOSED GRADE LINE
EXISTING ROADWAY GRADE
-4.32%
+3.04%
VPI 466+93.90
EL 706.61
LP 467+37.71
EL 711.30

730
725
720
715
710
705
700
695

723.31 / 723.58
721.05 / 721.47
718.78 / 719.31
716.60 / 717.16
714.67 / 715.23
713.13 / 713.68
712.04 / 712.49
711.43 / 711.66
710.99 / 711.21
710.71 / 711.11
711.00 / 711.39
711.36 / 712.02
712.39 / 713.03

463+00
463+50
464+00
464+50
465+00
465+50
466+00
466+50
467+00
467+50
468+00
468+50
469+00

MODEL: Ideal_PR-17-1 [Sheet]
File name: S:\Proj_County\1997_Carroll County - Ideal Road Reconstruction\CADD\CADD_Civil\Sheets\7997-R6R-01_Ideal2.dgn

CHASTAIN & ASSOCIATES LLC
CONSULTING ENGINEERS

USER NAME = dwozniarski	DESIGNED -	REVISED -	
	DRAWN -	REVISED -	
PLOT SCALE = 0.167 ' / in.	CHECKED -	REVISED -	
PLOT DATE = 6/14/2024	DATE - 04/17/2024	REVISED -	

STATE OF ILLINOIS
DEPARTMENT OF TRANSPORTATION

IDEAL ROAD RECONSTRUCTION
PLAN AND PROFILE – IDEAL ROAD

SCALE: SCALE | SHEET 18 OF 46 SHEETS | STA. TO STA.

F.A.S. RTE.	SECTION	COUNTY	TOTAL SHEETS	SHEET NO.
1084	20-00102-00-PV	CARROLL	217	37

CONTRACT NO. 85761

ILLINOIS | FED. AID PROJECT

85761

N

03-14-13-400-001
CAROLLYNN E. FINK ET AL

STA. 472+50.00
OFF. 56.04' LT.

STA. 472+50.00
OFF. 48.00' LT

LIMITS OF CONSTRUCTION

TEMPORARY EASEMENT

012TE1

TEMPORARY EASEMENT

LIMITS OF CONSTRUCTION

STA. 474+78.05
OFF. 56.17' LT.

EX. RIGHT OF WAY

STA. 474+78.06
OFF. 40.17' LT.

LT SPECIAL DITCH

CONCRETE GUTTER OUTLET

CONCRETE GUTTER, TYPE B
STA 473+24 TO STA 475+22

EXISTING CONCRETE
GUTTER TO BE REMOVED

AGGREGATE SHOULDER, TYPE B, 4"

MATCHLINE STA. 469+00.00

MATCHLINE STA. 475+00.00

5' 12' 12' 5' 80' 3.25'

AGG

469 470+00 471 472 473 474

PT PC PI

+00 +74

STA. 473+24
OFF. 15.25 LT

STA. 472+98
OFF. 15.25 RT

HOT MIX ASPHALT SHOULDER, 4"

CONCRETE GUTTER, TYPE B
STA 472+98 TO STA 475+81

LANDSCAPE WALL
TO BE REMOVED

EX. RIGHT OF WAY

EX. RIGHT OF WAY

013TE2

STA. 471+41.12
OFF. 40.04' RT.

STA. 471+41.12
OFF. 52.04' RT.

STA. 473+31.24
OFF. 39.93' RT.

STA. 473+31.25
OFF. 57.93' RT.

CONCRETE GUTTER OUTLET

TEMPORARY EASEMENT

TEMPORARY EASEMENT

013TE1

LIMITS OF CONSTRUCTION

PAVEMENT RECLAMATION
SUBBASE GRANULAR MATERIAL, TYPE B, 8"
AGGREGATE BASE COURSE, TYPE B, 8"
ADD ROCK (AS NEEDED)
HOT MIX ASPHALT BINDER COURSE, IL-19.0, N50, 2 1/2"
HOT MIX ASPHALT SURFACE COURSE, IL-9.5, MIX D, N50, 1 1/2"

03-14-24-100-001
CAROLLYNN E. FINK AND
VERNON A. FINK ESTATE

0 20 40 60
SCALE IN FEET

735 730 725 720 715 710 705 700

L = 503.38'
K = 68.35

VPT 469+45.59
EL 714.26

DESIGN SPEED
= 50 MPH

PROPOSED GRADE LINE

VPC 471+32.80
EL 719.96

L = 642.16'
K = 85.25

DESIGN SPEED = 50 MPH

EXISTING ROADWAY GRADE

HP 473+92.06
EL 723.90

VPI 474+78.05
EL 723.90

+3.04%

-4.49%

4.90%

LT 471+00.00
713.00

LT SPECIAL DITCH

LT 472+50.00
720.40

712.39 **713.03** | 713.75 **714.40** | 715.38 **715.92** | 717.10 **717.44** | 718.66 **718.96** | 720.09 **720.46** | 721.39 **721.73** | 722.68 **722.71** | 723.47 **723.40** | 723.86 **723.79** | 723.91 **723.89** | 723.65 **723.70** | 723.17 **723.22**

469+00 469+50 470+00 470+50 471+00 471+50 472+00 472+50 473+00 473+50 474+00 474+50 475+00

MODEL: Ideal_PR-18-1 [Sheet]
FILE NAME: S:\Proj_County\1997_Carroll County - Ideal Road Reconstruction\CADD\CADD_Civil\Sheets\1997-P&P-01_Ideal2.dgn

CHASTAIN & ASSOCIATES LLC
CONSULTING ENGINEERS

USER NAME = dwozniarski	DESIGNED -	REVISED -	
	DRAWN -	REVISED -	
PLOT SCALE = 0.167 ' / in.	CHECKED -	REVISED -	
PLOT DATE = 6/14/2024	DATE - 04/17/2024	REVISED -	

STATE OF ILLINOIS
DEPARTMENT OF TRANSPORTATION

IDEAL ROAD RECONSTRUCTION
PLAN AND PROFILE – IDEAL ROAD

SCALE: SCALE | SHEET 19 OF 46 SHEETS | STA. TO STA.

F.A.S. RTE.	SECTION	COUNTY	TOTAL SHEETS	SHEET NO.
1084	20-00102-00-PV	CARROLL	217	38

CONTRACT NO. 85761

ILLINOIS | FED. AID PROJECT

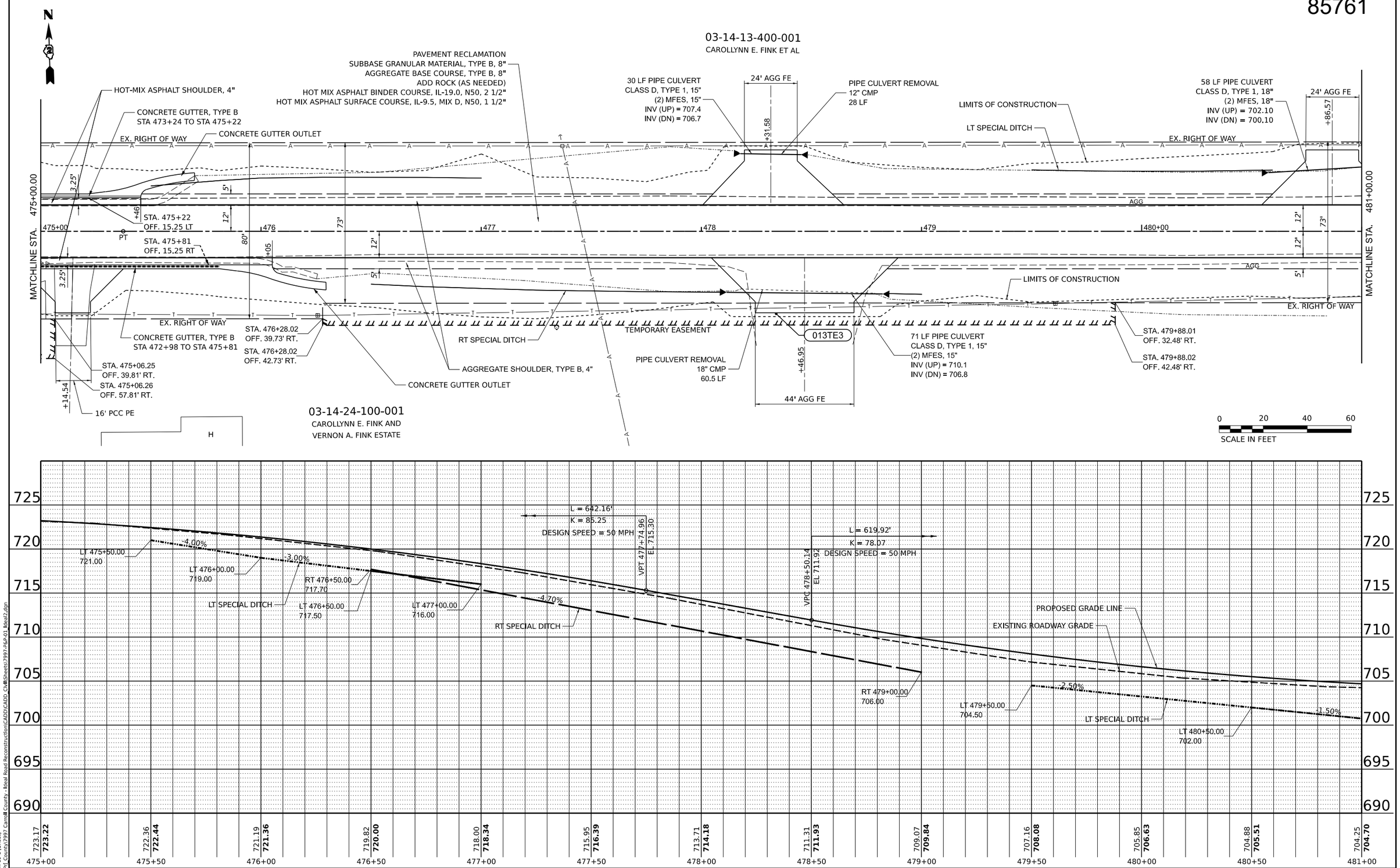

MODEL: Ideal_PR-19-1 [Sheet]
FILE NAME: R:\Proj_County\1997 Carroll County - Ideal Road Reconstruction\CADD\CADD_Civil\Sheets\1997-P&P-01_Ideal2.dgn

CHASTAIN & ASSOCIATES LLC CONSULTING ENGINEERS	USER NAME = dwozniarski	DESIGNED -	REVISED -
		DRAWN -	REVISED -
	PLOT SCALE = 0.167 ' / in.	CHECKED -	REVISED -
	PLOT DATE = 6/14/2024	DATE - 04/17/2024	REVISED -

STATE OF ILLINOIS
DEPARTMENT OF TRANSPORTATION

IDEAL ROAD RECONSTRUCTION
PLAN AND PROFILE – IDEAL ROAD

SCALE: SCALE | SHEET 20 OF 46 SHEETS | STA. TO STA.

F.A.S. RTE.	SECTION	COUNTY	TOTAL SHEETS	SHEET NO.
1084	20-00102-00-PV	CARROLL	217	39

CONTRACT NO. 85761

ILLINOIS | FED. AID PROJECT

85761

N

03-14-13-400-002
JERRY L. JACOBS AND JANICE M. JACOBS (TRACT II)

STA. 482+30.19
OFF. 82.69' LT.

PERMANENT EASEMENT

STA. 482+80.19
OFF. 82.72' LT.

PIPE CULVERT REMOVAL
18" CMP
28 LF

014PE1

STA. 482+30.22
OFF. 40.69' LT.

STA. 482+80.22
OFF. 40.72' LT.

STA. 485+00.00
OFF. 50.45' LT.

STA. 485+00.00
OFF. 40.45' LT.

PAVEMENT RECLAMATION
SUBBASE GRANULAR MATERIAL, TYPE B, 8"
AGGREGATE BASE COURSE, TYPE B, 8"
FULL DEPTH RECLAMATION
ADD ROCK (AS NEEDED)
HOT MIX ASPHALT BINDER COURSE, IL-19.0, N50, 2 1/2"
HOT MIX ASPHALT SURFACE COURSE, IL-9.5, MIX D, N50, 1 1/2"

TEMPORARY EASEMENT

014TE2

EX. RIGHT OF WAY

LIMITS OF CONSTRUCTION

LT SPECIAL DITCH

MATCHLINE STA. 481+00.00

MATCHLINE STA. 487+00.00

5'
12'
12'
73'
5'
80'
12'
12'
5'
5'

AGG

481 482 483 484 485+00 486

PC

REMOVAL OF EXISTING STRUCTURE NO. 5

AGG

EX. RIGHT OF WAY
STA. 482+54.61
9'X 6' CIPC BOX CULVERT
SEE CULVERT DETAIL (SN 482+54)
INV (482+54, 28' LT) = 692.90
INV (482+54, 28' RT) = 692.50

STA. 482+30.27
OFF. 32.31' RT.

STA. 482+80.27
OFF. 32.28' RT.

+43.08

24' AGG FE

LIMITS OF CONSTRUCTION

EX. RIGHT OF WAY

AGGREGATE SHOULDER, TYPE B, 4"

013PE2

STA. 482+30.31
OFF. 82.31' RT.

PERMANENT EASEMENT

STA. 482+80.31
OFF. 82.28' RT.

013-14-24-100-001
CARROLLYNN E. FINK AND
VERNON A. FINK ESTATE

0 20 40 60
SCALE IN FEET

720
715
710
705
700
695
690
685

L = 619.92'
K = 78.07
DESIGN SPEED = 50 MPH

VPT 484+70.06
EL 708.70

EXISTING ROADWAY GRADE

PROPOSED GRADE LINE

LT SPECIAL DITCH

-1.60%

-4.49%

+3.45%

-1.70%

LT 481+50.00
699.50

VPI 481+60.10
EL 698.00

LP 482+00.76
EL 704.05

LT 482+15.00
698.50

33 LF PIPE CULVERT
CLASS D, TYPE 1, 15"
(2) MFES, 15"
INV (UP) = 700.4
INV (DN) = 699.6

LT 484+00.00
703.50

4.40%

LT 484+50.00
705.70

3.30%

LT 485+50.00
709.00

LT SPECIAL DITCH

3.30%

LT 487+00.00
714.00

704.25 **704.70** 481+00
703.93 **704.22** 481+50
703.62 **704.05** 482+00
703.51 **704.21** 482+50
703.87 **704.68** 483+00
704.59 **705.48** 483+50
706.00 **706.59** 484+00
707.60 **708.03** 484+50
709.30 **709.73** 485+00
711.06 **711.45** 485+50
712.80 **713.18** 486+00
714.48 **714.90** 486+50
716.22 **716.63** 487+00

MODEL: Ideal_PR-20-1 [Sheet]
FILE NAME: R:\Proj_Cons\Proj\1997 Carroll County - Ideal Road Reconstruction\CADD\CADD_Civil\Sheets\1997-P&P-01_Ideal3.dgn

CHASTAIN & ASSOCIATES LLC
CONSULTING ENGINEERS

USER NAME = dwozniarski	DESIGNED -	REVISED -	
	DRAWN -	REVISED -	
PLOT SCALE = 0.166666 ' / in.	CHECKED -	REVISED -	
PLOT DATE = 6/14/2024	DATE - 04/17/2024	REVISED -	

STATE OF ILLINOIS
DEPARTMENT OF TRANSPORTATION

IDEAL ROAD RECONSTRUCTION
PLAN AND PROFILE – IDEAL ROAD

SCALE: SCALE | SHEET 21 OF 46 SHEETS | STA. TO STA.

F.A.S. RTE.	SECTION	COUNTY	TOTAL SHEETS	SHEET NO.
1084	20-00102-00-PV	CARROLL	217	40

CONTRACT NO. 85761

ILLINOIS | FED. AID PROJECT

85761

N

PAVEMENT RECLAMATION
SUBBASE GRANULAR MATERIAL, TYPE B, 8"
AGGREGATE BASE COURSE, TYPE B, 8"
FULL DEPTH RECLAMATION
ADD ROCK (AS NEEDED)
HOT MIX ASPHALT BINDER COURSE, IL-19.0, N50, 2 1/2"
HOT MIX ASPHALT SURFACE COURSE, IL-9.5, MIX D, N50, 1 1/2"

03-14-13-400-002
JERRY L. JACOBS AND
JANICE M. JACOBS (TRACT II)

03-14-13-400-002
JERRY L. JACOBS (TRACT I)

014PE2
STA. 490+94.21
OFF. 50.41' LT.

STA. 491+54.41
OFF. 50.58' LT.

STA. 491+54.43
OFF. 40.58' LT.

LIMITS OF CONSTRUCTION

TEMPORARY EASEMENT

EX. RIGHT OF WAY

014TE2

PERMANENT EASEMENT

AGGREGATE SHOULDER, TYPE B, 4"

LIMITS OF CONSTRUCTION

EX. RIGHT OF WAY

STA. 490+94.24
OFF. 40.41' LT.

LT SPECIAL DITCH

MATCHLINE STA. 487+00.00

MATCHLINE STA. 493+00.00

5' 12' 12' 5'

80'

AGG

PIPE CULVERT REMOVAL
24" CMP
49 LF

487 488 489 490+00 491 492

PI

PT

AGG

LIMITS OF CONSTRUCTION

EX. RIGHT OF WAY

EX. RIGHT OF WAY

PR CURVE PRCL-DR
PI STA = 487+70.03
Δ = 03°29'53" (LT)
D = 00°26'16"
R = 13,087.66'
T = 399.64'
L = 799.02'
E = 6.10'
e = ____
TR = ____
SE RUN = ____
PC STA = 483+70.40
PT STA = 491+69.42

013-14-24-100-001
CARROLLYNN E. FINK AND
VERNON A. FINK ESTATE

STA 491+23.3
49 LF PIPE CULVERT
CLASS A , TYPE 1, 24"
(2) PCFE SECTIONS, 24"
INV (STA 491+23, 31.5' RT) = 724.55
INV (STA 491+23, 30' LT) = 726.00

STA. 491+08.45
OFF. 39.55' RT.

STA. 491+08.50
OFF. 54.54' RT.

013PE3

PERMANENT
EASEMENT

STA. 491+38.34
OFF. 39.45' RT.

STA. 491+38.37
OFF. 54.45' RT.

LIMITS OF CONSTRUCTION

0 20 40 60
SCALE IN FEET

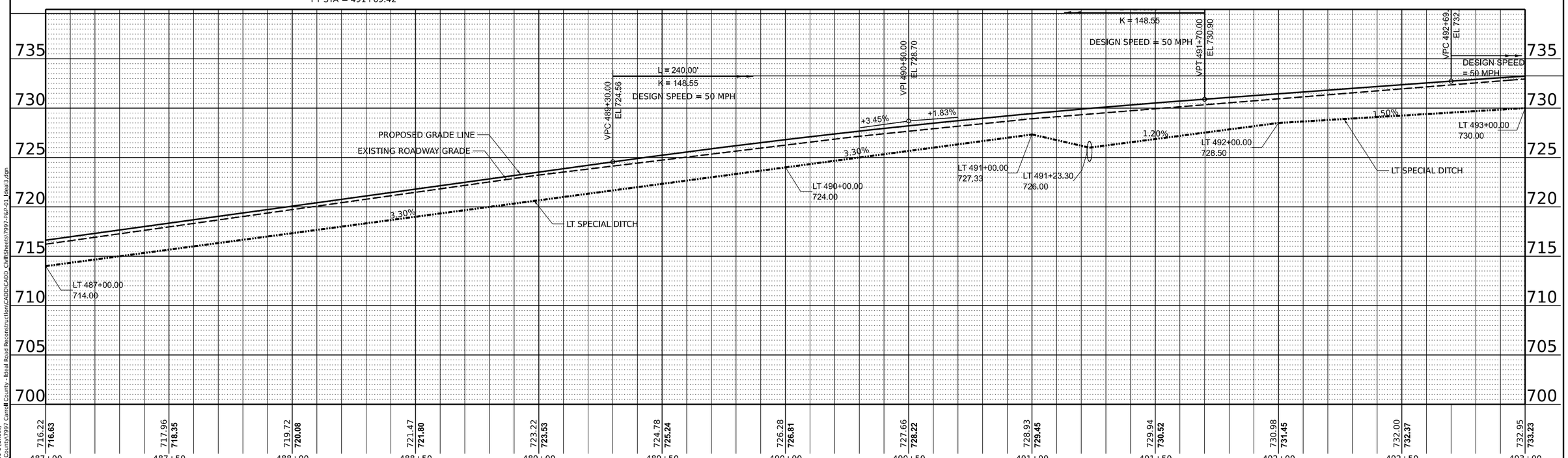

MODEL: Ideal_PR-21-1 [Sheet]
FILE NAME: ...Royal_County\7997_Carroll County - Ideal Road Reconstruction\CADD\CADD_Civil\Sheets\7997-P&P-01_Ideal3.dgn

CHASTAIN & ASSOCIATES LLC
CONSULTING ENGINEERS

USER NAME = dwozniarski	DESIGNED -	REVISED -	
	DRAWN -	REVISED -	
PLOT SCALE = 0.166666 ' / in.	CHECKED -	REVISED -	
PLOT DATE = 6/14/2024	DATE - 04/17/2024	REVISED -	

STATE OF ILLINOIS
DEPARTMENT OF TRANSPORTATION

IDEAL ROAD RECONSTRUCTION
PLAN AND PROFILE – IDEAL ROAD

SCALE: SCALE | SHEET 22 OF 46 SHEETS | STA. TO STA.

F.A.S. RTE.	SECTION	COUNTY	TOTAL SHEETS	SHEET NO.
1084	20-00102-00-PV	CARROLL	217	41

CONTRACT NO. 85761

ILLINOIS | FED. AID PROJECT

85761

SEE DAMBMAN ROAD PLAN & PROFILE SHEET FOR SIDE ROAD DETAIL

03-14-13-400-002
JERRY JACOBS (TRACT I)

014TE3

DAMBMAN RD.

11-15-18-300-002
JERRY L. JACOBS AND
JANICE M. JACOBS (TRACT II)

PAVEMENT RECLAMATION
SUBBASE GRANULAR MATERIAL, TYPE B, 8"
AGGREGATE BASE COURSE, TYPE B, 8"
FULL DEPTH RECLAMATION
ADD ROCK (AS NEEDED)
HOT MIX ASPHALT BINDER COURSE, IL-19.0, N50, 2 1/2"
HOT MIX ASPHALT SURFACE COURSE, IL-9.5, MIX D, N50, 1 1/2"

STA. 494+79.74
OFF. 48.61' LT.

STA 494+38.15 (IDEAL RD.)
STA 50+00.00 (N DAMBMAN RD)

LIMITS OF CONSTRUCTION

STA. 493+98.21
OFF. 40.60' LT.

EX. RIGHT OF WAY

TEMPORARY EASEMENT

015TE1

EX. RIGHT OF WAY

LT SPECIAL DITCH

LIMITS OF CONSTRUCTION

STA. 497+89.94
OFF. 40.54' LT.

015PE1

STA. 497+90.01
OFF. 60.54' LT.

STA. 497+89.97
OFF. 48.54' LT.

PERMANENT EASEMENT

STA. 498+21.88
OFF. 60.41' LT.

STA. 498+21.84
OFF. 48.41' LT.

STA. 498+21.81
OFF. 40.41' LT.

STA 498 +18.0, 14° SKEW
75 LF PIPE CULVERT
CLASS A, TYPE 2, 36"
(2) PCFE SECTION, 36"
INV (498+09, 38.6' LT) = 721.00
INV (498+30, 50' RT) = 717.00

TEMPORARY EASEMENT

015TE2

PIPE CULVERT REMOVAL
36" CMP
75 LF

MATCHLINE STA. 493+00.00

MATCHLINE STA. 499+00.00

5' 12' 80' 12' 5'

AGG

493 494 495+00 496 497 498 PC

43 50+00

AGG

RT SPECIAL DITCH

LIMITS OF CONSTRUCTION

EX. RIGHT OF WAY

STA. 493+92.47
OFF. 39.27' RT.

013TE4

STA. 493+91.22
OFF. 69.25' RT.

013-14-24-100-001
CARROLLYNN E. FINK AND
VERNON A. FINK ESTATE

DAMBMAN RD.

016TE1

TEMPORARY EASEMENT

STA 494+34.48 (IDEAL RD.)
STA 43+00.00 (S DAMBMAN RD)

STA. 494+72.20
OFF. 47.39' RT.

LIMITS OF CONSTRUCTION

11-15-19-100-001
ROGER W. JACOBS
AND TERRI JACOBS

STA. 497+57.20
OFF. 47.37' RT.

STA. 497+57.19
OFF. 59.38' RT.

TEMPORARY EASEMENT

STA. 498+12.70
OFF. 39.55' RT.

STA. 498+12.62
OFF. 59.55' RT.

STA. 498+52.91
OFF. 39.68' RT.

EX. RIGHT OF WAY

STA. 498+52.86
OFF. 59.68' RT.

TEMPORARY EASEMENT

016PE1

PERMANENT EASEMENT

STA. 498+52.81
OFF. 79.68' RT.

STA. 498+12.54
OFF. 79.55' RT.

0 20 40 60
SCALE IN FEET

N

SEE DAMBMAN ROAD PLAN & PROFILE SHEET FOR SIDE ROAD DETAIL

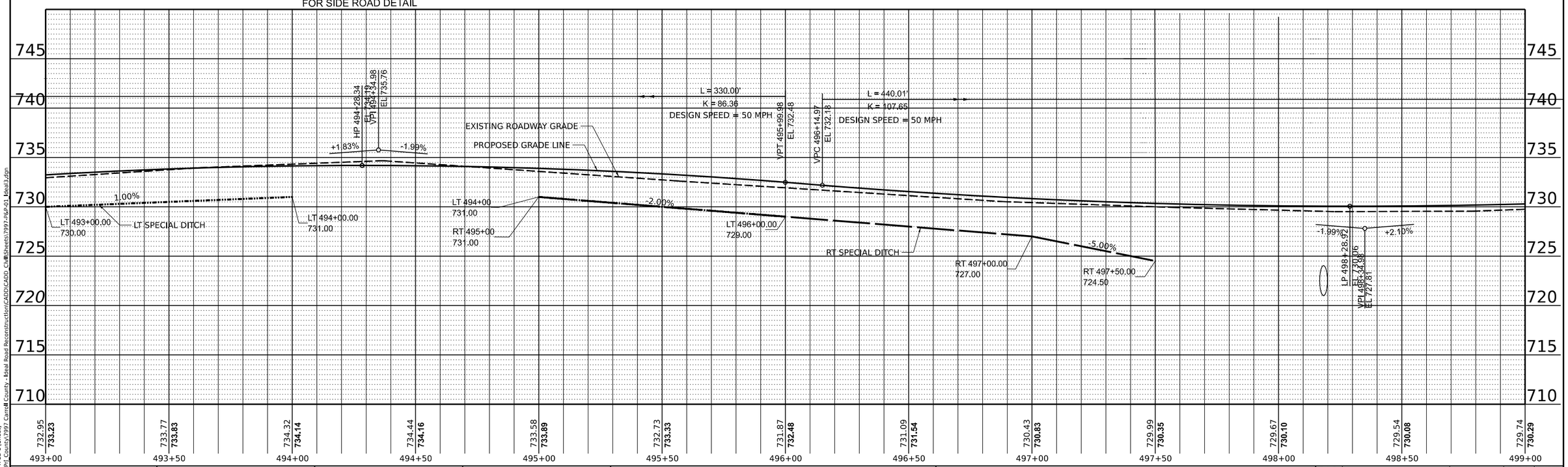

MODEL: Ideal_PR-22-1 [Sheet]
FILE NAME: S:\Proj\Carroll County - Ideal Road Reconstruction\CADD\CADD_Civil\Sheets\7997-P&P-01_Ideal3.dgn

CHASTAIN & ASSOCIATES LLC
CONSULTING ENGINEERS

USER NAME = dwozniarski	DESIGNED -	REVISED -	
	DRAWN -	REVISED -	
PLOT SCALE = 0.166666 ' / in.	CHECKED -	REVISED -	
PLOT DATE = 6/14/2024	DATE - 04/17/2024	REVISED -	

STATE OF ILLINOIS
DEPARTMENT OF TRANSPORTATION

IDEAL ROAD RECONSTRUCTION
PLAN AND PROFILE – IDEAL ROAD

SCALE: SCALE | SHEET 23 OF 46 SHEETS | STA. TO STA.

F.A.S. RTE.	SECTION	COUNTY	TOTAL SHEETS	SHEET NO.
1084	20-00102-00-PV	CARROLL	217	42

CONTRACT NO. 85761

ILLINOIS | FED. AID PROJECT

85761

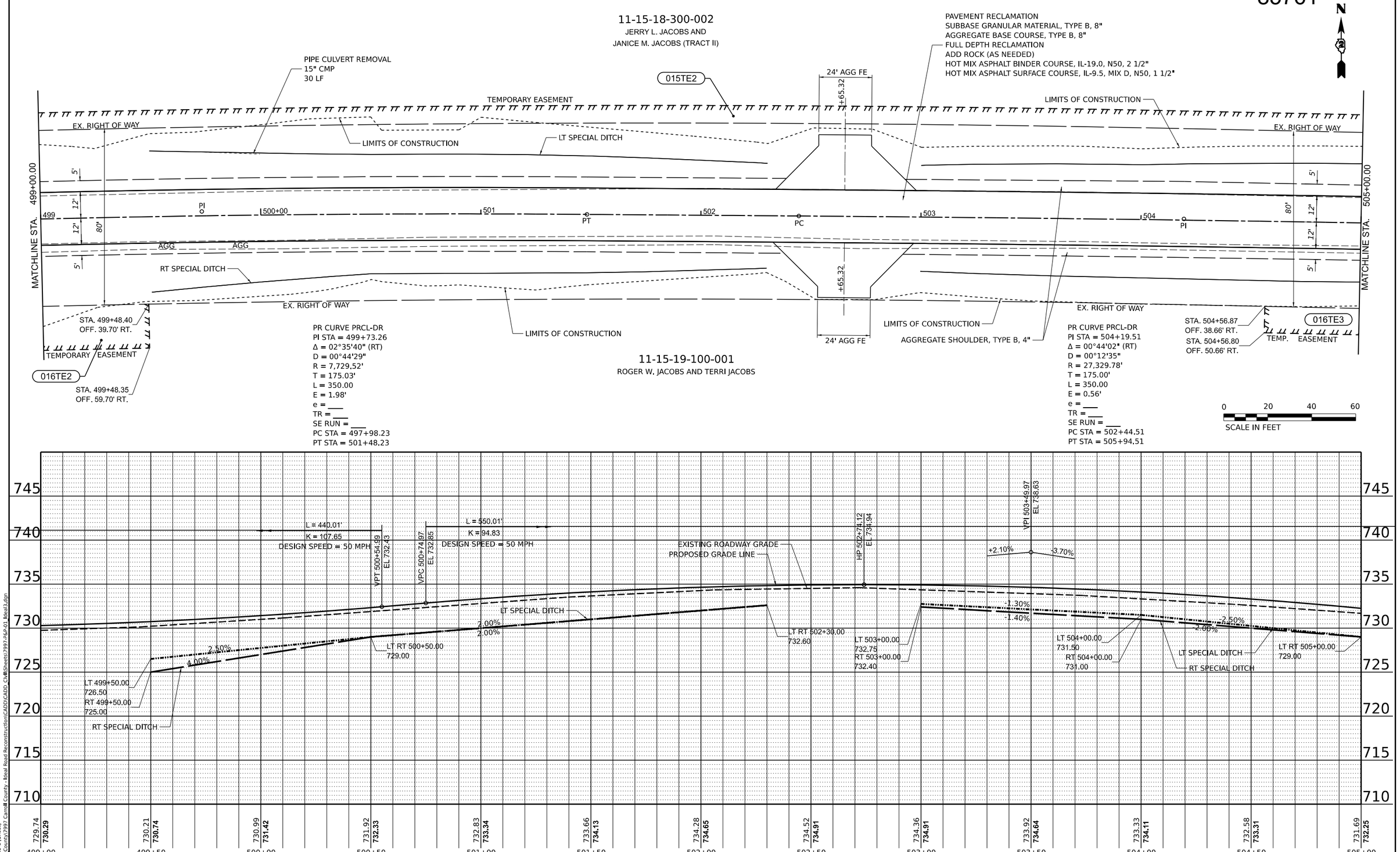

MODEL: Ideal_PR-23-1 [Sheet]
FILE NAME: R:\Proj_County\7997 Carroll County - Ideal Road Reconstruction\CADD\CADD_Civil\Sheets\7997-P&P-01 Ideal3.dgn

CHASTAIN & ASSOCIATES LLC
CONSULTING ENGINEERS

USER NAME = dwozniarski	DESIGNED -	REVISED -	
	DRAWN -	REVISED -	
PLOT SCALE = 0.166666 ' / in.	CHECKED -	REVISED -	
PLOT DATE = 6/14/2024	DATE - 04/17/2024	REVISED -	

STATE OF ILLINOIS
DEPARTMENT OF TRANSPORTATION

IDEAL ROAD RECONSTRUCTION
PLAN AND PROFILE – IDEAL ROAD

SCALE: #### | SHEET 24 OF 46 SHEETS | STA. TO STA.

F.A.S. RTE.	SECTION	COUNTY	TOTAL SHEETS	SHEET NO.
1084	20-00102-00-PV	CARROLL	217	43

CONTRACT NO. 85761

ILLINOIS | FED. AID PROJECT

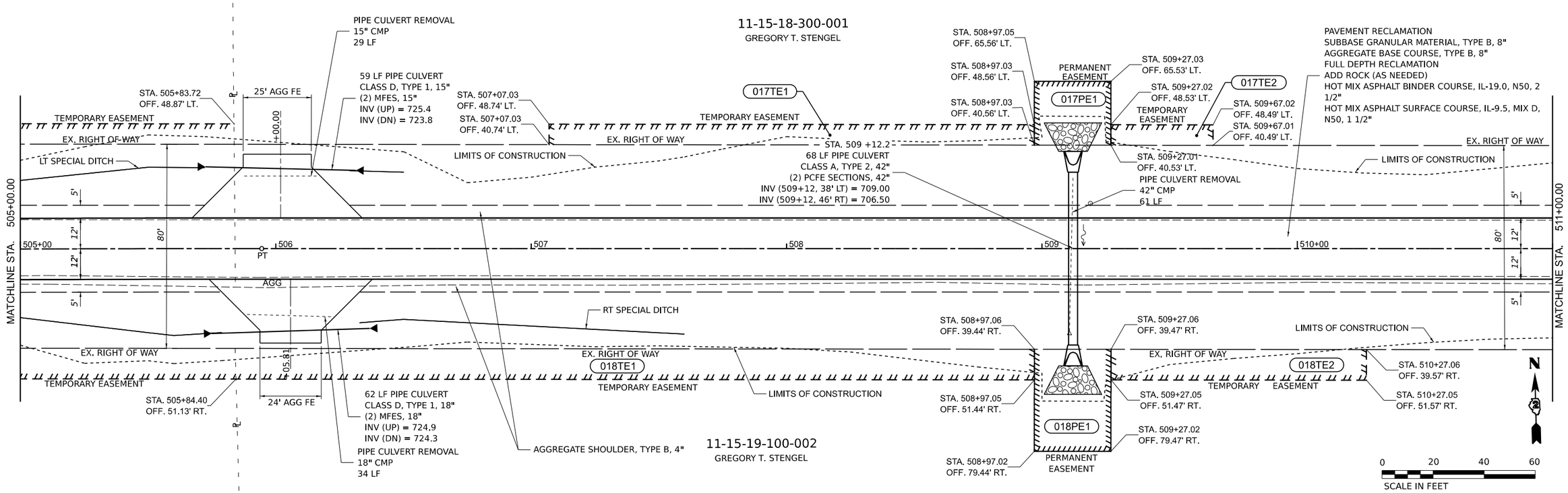

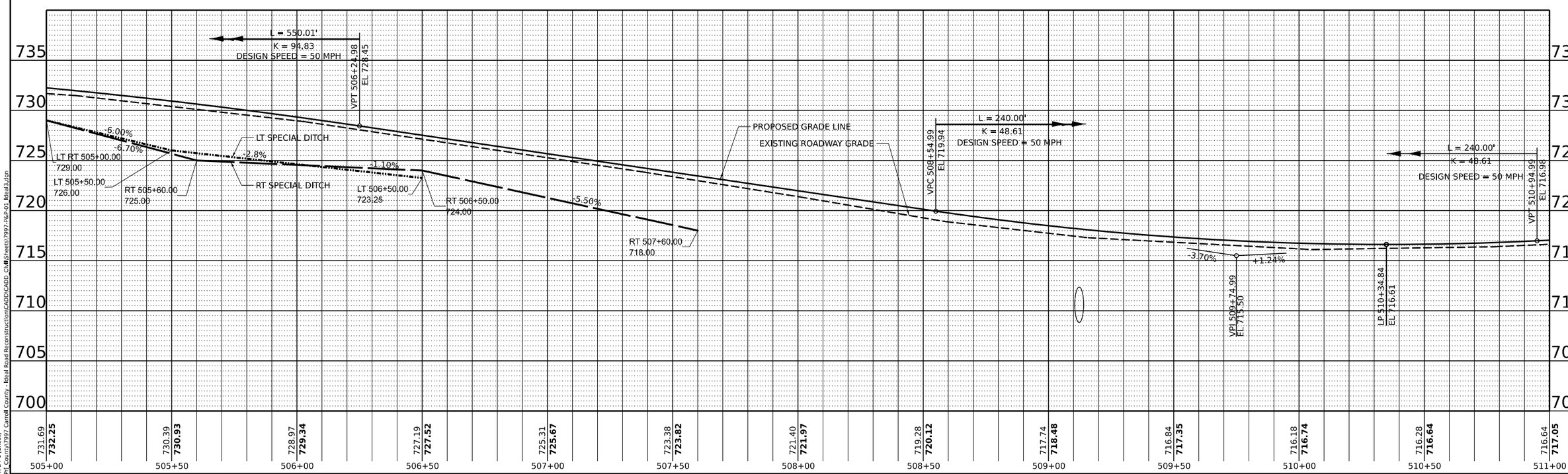

MODEL: Ideal_PR-24-1 [Sheet]
FILE NAME: ...Ideal Road Reconstruction\CADD\CADD_Civil\Sheets\7997-PEP-01_Ideal3.dgn

CHASTAIN & ASSOCIATES LLC CONSULTING ENGINEERS	USER NAME = dwozniarski	DESIGNED -	REVISED -	STATE OF ILLINOIS DEPARTMENT OF TRANSPORTATION	IDEAL ROAD RECONSTRUCTION PLAN AND PROFILE – IDEAL ROAD
		DRAWN -	REVISED -		
	PLOT SCALE = 0.166666 ' / in.	CHECKED -	REVISED -		SCALE: SCALE SHEET 25 OF 46 SHEETS STA. TO STA.
	PLOT DATE = 6/14/2024	DATE - 04/17/2024	REVISED -		

F.A.S. RTE.	SECTION	COUNTY	TOTAL SHEETS	SHEET NO.
1084	20-00102-00-PV	CARROLL	217	44
		CONTRACT NO. 85761		
		ILLINOIS	FED. AID PROJECT	

85761

N

11-15-18-300-001
GREGORY T. STENGEL

AGGREGATE SHOULDER, TYPE B, 4"

LIMITS OF CONSTRUCTION

PAVEMENT RECLAMATION
SUBBASE GRANULAR MATERIAL, TYPE B, 8"
AGGREGATE BASE COURSE, TYPE B, 8"
FULL DEPTH RECLAMATION
ADD ROCK (AS NEEDED)
HOT MIX ASPHALT BINDER COURSE, IL-19.0, N50, 2 1/2"
HOT MIX ASPHALT SURFACE COURSE, IL-9.5, MIX D, N50, 1 1/2"

CONCRETE GUTTER, TYPE B
STA. 514+50 TO STA. 517+07

EXISTING CONCRETE GUTTER TO BE REMOVED

HOT-MIX ASPHALT SHOULDERS, 4"

EX. RIGHT OF WAY

LT SPECIAL DITCH

MATCHLINE STA. 511+00.00

MATCHLINE STA. 517+00.00

511 512 513 514 515+00 516

PT

STA. 514+50
OFF. 15.25' LT

STA. 514+50
OFF. 15.25' RT

AGG

RT SPECIAL DITCH

EX. RIGHT OF WAY

LIMITS OF CONSTRUCTION

CONCRETE GUTTER OUTLET

TEMPORARY EASEMENT

018TE3

STA. 514+44.24
OFF. 37.99' RT.

STA. 515+44.26
OFF. 33.07' RT.

STA. 515+44.26
OFF. 38.07' RT.

14' AGG
PE

11-15-19-100-002
GREGORY T. STENGEL

11-15-19-100-003
ERIC H. & KAREN L. SCHAVE

0 20 40 60
SCALE IN FEET

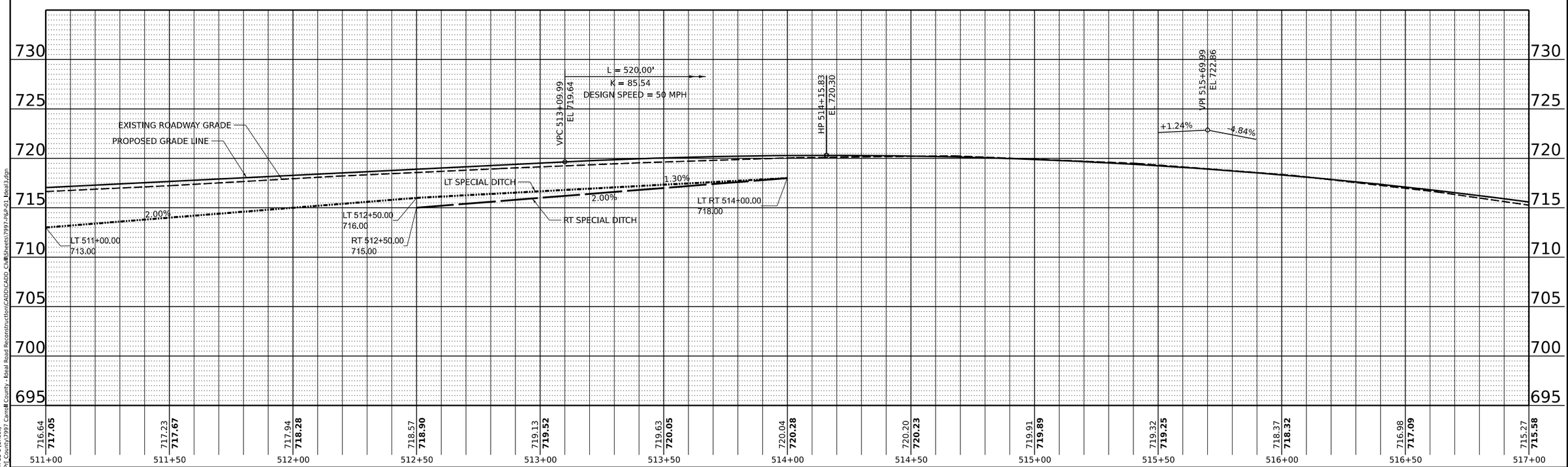

MODEL: Ideal_PR-25-1 [Sheet]
FILE NAME: 85761_Ideal Road Reconstruction\CADD\CADD_Civil\Sheets\7997-PEP-01_Ideal3.dgn
Ideal Road Reconstruction - Ideal - Carroll County\7997 Carroll County

CHASTAIN & ASSOCIATES LLC
CONSULTING ENGINEERS

USER NAME = dwozniarski	DESIGNED -	REVISED -	
	DRAWN -	REVISED -	
PLOT SCALE = 0.166666 ' / in.	CHECKED -	REVISED -	
PLOT DATE = 6/14/2024	DATE - 04/17/2024	REVISED -	

STATE OF ILLINOIS
DEPARTMENT OF TRANSPORTATION

IDEAL ROAD RECONSTRUCTION
PLAN AND PROFILE – IDEAL ROAD

SCALE: SCALE | SHEET 26 OF 46 SHEETS | STA. TO STA.

F.A.S. RTE.	SECTION	COUNTY	TOTAL SHEETS	SHEET NO.
1084	20-00102-00-PV	CARROLL	217	45

CONTRACT NO. 85761

ILLINOIS | FED. AID PROJECT

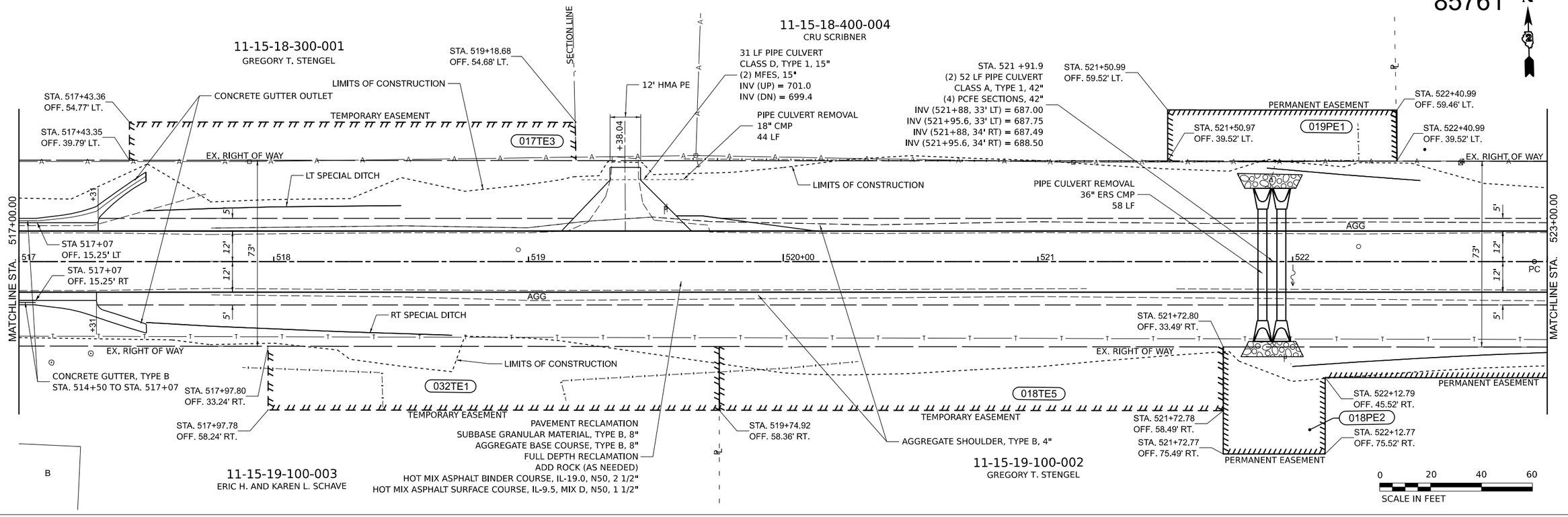

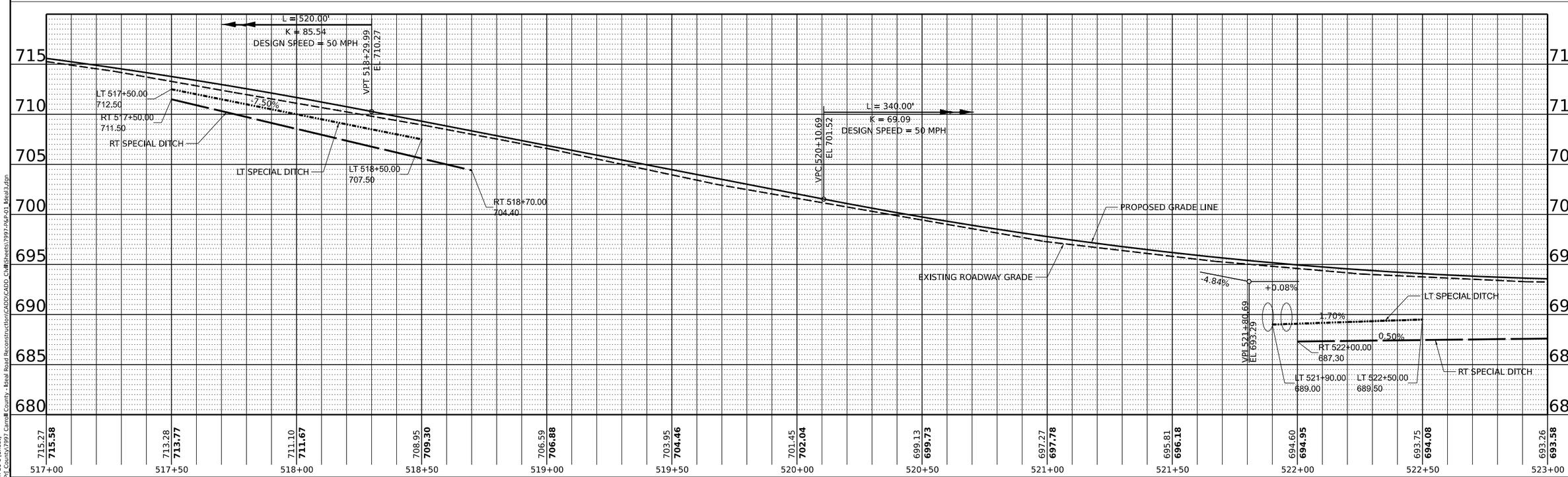

MODEL: Ideal_PR-26-1 [Sheet]
FILE NAME: S:\Proj\Carroll County\7993 Carroll County - Ideal Road Reconstruction\CADD\CADD_Civil\Sheets\7993-PEP-01_Ideal3.dgn

CHASTAIN & ASSOCIATES LLC CONSULTING ENGINEERS	USER NAME = dwozniarski	DESIGNED -	REVISED -	STATE OF ILLINOIS DEPARTMENT OF TRANSPORTATION	IDEAL ROAD RECONSTRUCTION PLAN AND PROFILE – IDEAL ROAD	F.A.S. RTE. 1084	SECTION 20-00102-00-PV	COUNTY CARROLL	TOTAL SHEETS 217 / SHEET NO. 46
		DRAWN -	REVISED -					CONTRACT NO. 85761	
	PLOT SCALE = 0.166666 ' / in.	CHECKED -	REVISED -						
	PLOT DATE = 6/14/2024	DATE - 04/17/2024	REVISED -		SCALE: SCALE / SHEET 27 OF 46 SHEETS / STA. TO STA.			ILLINOIS	FED. AID PROJECT

85761

N

11-15-18-400-006
WAYNE JOHNSON

020PE1

STA. 523+45.2
48 LF PIPE CULVERT
CLASS A, TYPE 2, 24"
(2) PCFE SECTION, 24"
INV (523+45, 30' LT) = 688.25
INV (523+45, 31.5' RT) = 687.72

STA. 523+30.98
OFF. 49.40' LT.

PERMANENT EASEMENT

STA. 523+65.98
OFF. 49.38' LT.

LIMITS OF CONSTRUCTION

020TE2

TEMPORARY EASEMENT

LIMITS OF CONSTRUCTION

AGGREGATE SHOULDER, TYPE B, 4"

STA. 528+80.99
OFF. 48.96' LT.

PERM. EASEMENT

STA. 523+30.97
OFF. 39.40' LT.

EX. RIGHT OF WAY

EX. RIGHT OF WAY

STA. 523+65.97
OFF. 39.38' LT.

LT SPECIAL DITCH

STA. 528+80.98
OFF. 38.96' LT.

MATCHLINE STA. 523+00.00

MATCHLINE STA. 529+00.00

5'

AGG

523 524 525+00 526 527 528

PI

PT

12' 12' 73' 12' 12' 73'

AGG

5' 5'

EX. RIGHT OF WAY

EX. RIGHT OF WAY

STA. 523+30.79
OFF. 45.60' RT.

STA. 523+30.78
OFF. 53.60' RT.

PERMANENT EASEMENT

018PE2

STA. 523+60.79
OFF. 45.62' RT.

STA. 523+60.78
OFF. 53.62' RT.

RT SPECIAL DITCH

PERMANENT EASEMENT

PAVEMENT RECLAMATION
SUBBASE GRANULAR MATERIAL, TYPE B, 8"
AGGREGATE BASE COURSE, TYPE B, 8"
FULL DEPTH RECLAMATION
ADD ROCK (AS NEEDED)
HOT MIX ASPHALT BINDER COURSE, IL-19.0, N50, 2 1/2"
HOT MIX ASPHALT SURFACE COURSE, IL-9.5, MIX D, N50, 1 1/2"

PIPE CULVERT REMOVAL
24" CMP
41 LF

PIPE CULVERT REMOVAL
24" CMP
41 LF

+32.15

32' AGG FE

48 LF PIPE CULVERT
CLASS D, TYPE 1, 36"
(2) PC END SECTION, 36"
INV (UP) = 688.2
INV (DN) = 688.1

LIMITS OF CONSTRUCTION

STA. 528+85.78
OFF. 46.04' RT.

STA. 528+85.77
OFF. 52.04' RT.

11-15-19-100-002
GREGORY T. STENGEL

0 20 40 60
SCALE IN FEET

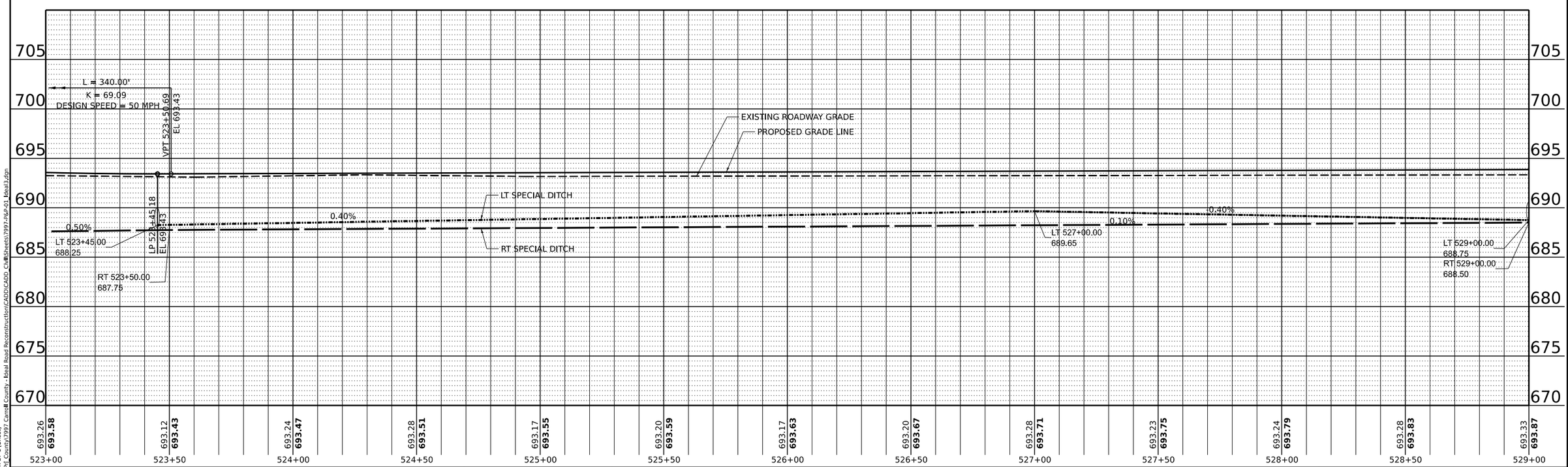

MODEL: Ideal_PR-27-1 [Sheet]
FILE NAME: S:\Civil_Projects\7997-Carroll County - Ideal Road Reconstruction\CADD\CADD_Civil\Sheets\7997-PEP-01_Ideal3.dgn

CHASTAIN & ASSOCIATES LLC
CONSULTING ENGINEERS

USER NAME = dwozniarski	DESIGNED -	REVISED -	
	DRAWN -	REVISED -	
PLOT SCALE = 0.166666 ' / in.	CHECKED -	REVISED -	
PLOT DATE = 6/14/2024	DATE - 04/17/2024	REVISED -	

STATE OF ILLINOIS
DEPARTMENT OF TRANSPORTATION

IDEAL ROAD RECONSTRUCTION
PLAN AND PROFILE – IDEAL ROAD

SCALE: SCALE | SHEET 28 OF 46 SHEETS | STA. TO STA.

F.A.S. RTE.	SECTION	COUNTY	TOTAL SHEETS	SHEET NO.
1084	20-00102-00-PV	CARROLL	217	47

CONTRACT NO. 85761

ILLINOIS | FED. AID PROJECT

N

11-15-18-400-006
WAYNE JOHNSON

PAVEMENT RECLAMATION
SUBBASE GRANULAR MATERIAL, TYPE B, 8"
AGGREGATE BASE COURSE, TYPE B, 8"
FULL DEPTH RECLAMATION
ADD ROCK (AS NEEDED)
HOT MIX ASPHALT BINDER COURSE, IL-19.0, N50, 2 1/2"
HOT MIX ASPHALT SURFACE COURSE, IL-9.5, MIX D, N50, 1 1/2"

PIPE CULVERT REMOVAL
24" CMP
29 LF

24' AGG FE

29 LF PIPE CULVERT
CLASS D, TYPE 1, 24"
(2) PCFE SECTION, 24"
INV (UP) = 691.40
INV (DN) = 691.00

+23.96

020PE2

PERMANENT EASEMENT

STA. 529+20.99
OFF. 48.93' LT.
STA. 529+20.98
OFF. 38.93' LT.

EX. RIGHT OF WAY

LIMITS OF CONSTRUCTION

MATCHLINE STA. 529+00.00

MATCHLINE STA. 535+00.00

5'
AGG
12'
73'
529
530+00
531
532
533
534
80'

018PE2

RT SPECIAL DITCH

LIMITS OF CONSTRUCTION

PERMANENT EASEMENT

AGGREGATE SHOULDER, TYPE B, 4"

STA. 529+00.0
48 LF PIPE CULVERT
CLASS D, TYPE 1, 24"
(2) PCFE SECTION, 24"
INV (529+00, 30' LT) = 688.69
INV (529+00, 30' RT) = 688.55

11-15-19-100-002
GREGORY T. STENGEL

STA. 532+29.15
OFF. 52.33' RT.

STA. 532+29.19
OFF. 56.33' RT.

021PE1

PERMANENT EASEMENT

STA. 533+09.17
OFF. 41.40' RT.

STA. 533+09.15
OFF. 56.40' RT.

11-15-19-200-001
DORETTA J. NEWENDYKE TRUST

021TE1

TEMPORARY EASEMENT

STA. 534+95.53
OFF. 41.50' RT.

STA. 534+95.55
OFF. 56.50' RT.

0 20 40 60
SCALE IN FEET

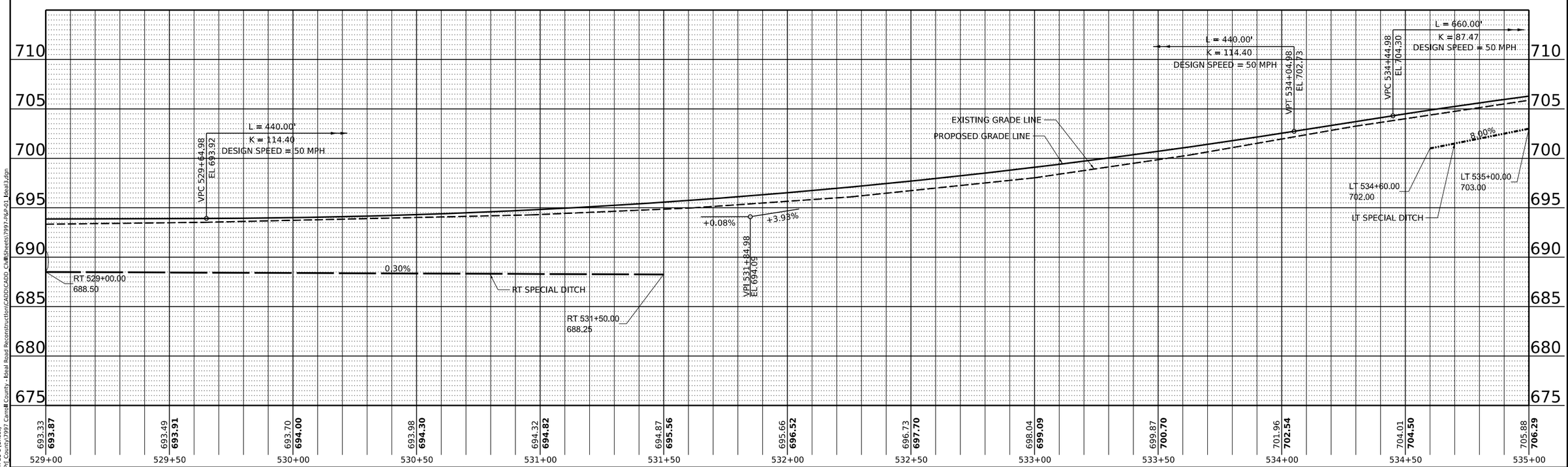

MODEL: Ideal_PR-28-1 [Sheet]
FILE NAME: S:\Proj_County\7997_Carroll County - Ideal Road Reconstruction\CADD\CADD_Civil\Sheets\7997-PEP-01_Ideal3.dgn

CHASTAIN & ASSOCIATES LLC CONSULTING ENGINEERS	USER NAME = dwozniarski	DESIGNED -	REVISED -	STATE OF ILLINOIS DEPARTMENT OF TRANSPORTATION	IDEAL ROAD RECONSTRUCTION PLAN AND PROFILE – IDEAL ROAD
		DRAWN -	REVISED -		
	PLOT SCALE = 0.166666 ' / in.	CHECKED -	REVISED -		
	PLOT DATE = 6/14/2024	DATE - 04/17/2024	REVISED -		SCALE: SCALE SHEET 29 OF 46 SHEETS STA. TO STA.

F.A.S. RTE.	SECTION	COUNTY	TOTAL SHEETS	SHEET NO.
1084	20-00102-00-PV	CARROLL	217	48
		CONTRACT NO. 85761		
		ILLINOIS	FED. AID PROJECT	

85761

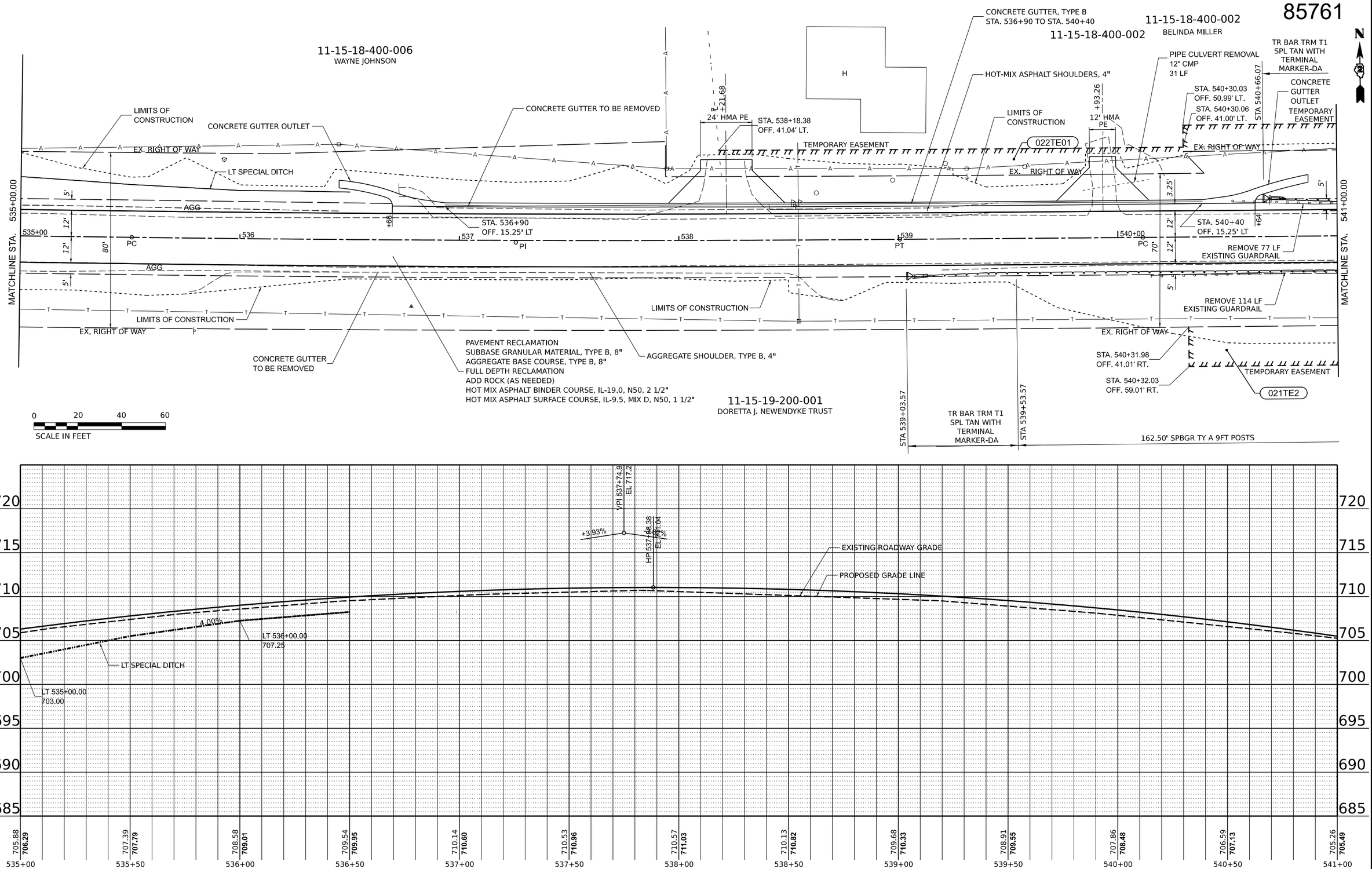

MODEL: Ideal_PR-29-1 [Sheet]
FILE NAME: S:\Proj\County\1997 Carroll County - Ideal Road Reconstruction\CADD\CADD Civil\Sheets\1997-P&P-01_Ideal3.dgn

CHASTAIN & ASSOCIATES LLC CONSULTING ENGINEERS	USER NAME = dwozniarski	DESIGNED -	REVISED -
		DRAWN -	REVISED -
	PLOT SCALE = 0.166666 ' / in.	CHECKED -	REVISED -
	PLOT DATE = 6/14/2024	DATE - 04/17/2024	REVISED -

STATE OF ILLINOIS
DEPARTMENT OF TRANSPORTATION

IDEAL ROAD RECONSTRUCTION
PLAN AND PROFILE – IDEAL ROAD

SCALE: SCALE | SHEET 30 OF 46 SHEETS | STA. | TO STA.

F.A.S. RTE.	SECTION	COUNTY	TOTAL SHEETS	SHEET NO.
1084	20-00102-00-PV	CARROLL	217	49

CONTRACT NO. 85761

ILLINOIS | FED. AID PROJECT

85761

11-15-18-400-005
JERRY A. GIBBS AND BOBBIE L. GIBBS

11-15-17-300-002
KEITH S. MACLENNAN AND HELEN C. MACLENNAN

11-15-19-200-001
DORETTA J. NEWENDYKE TRUST

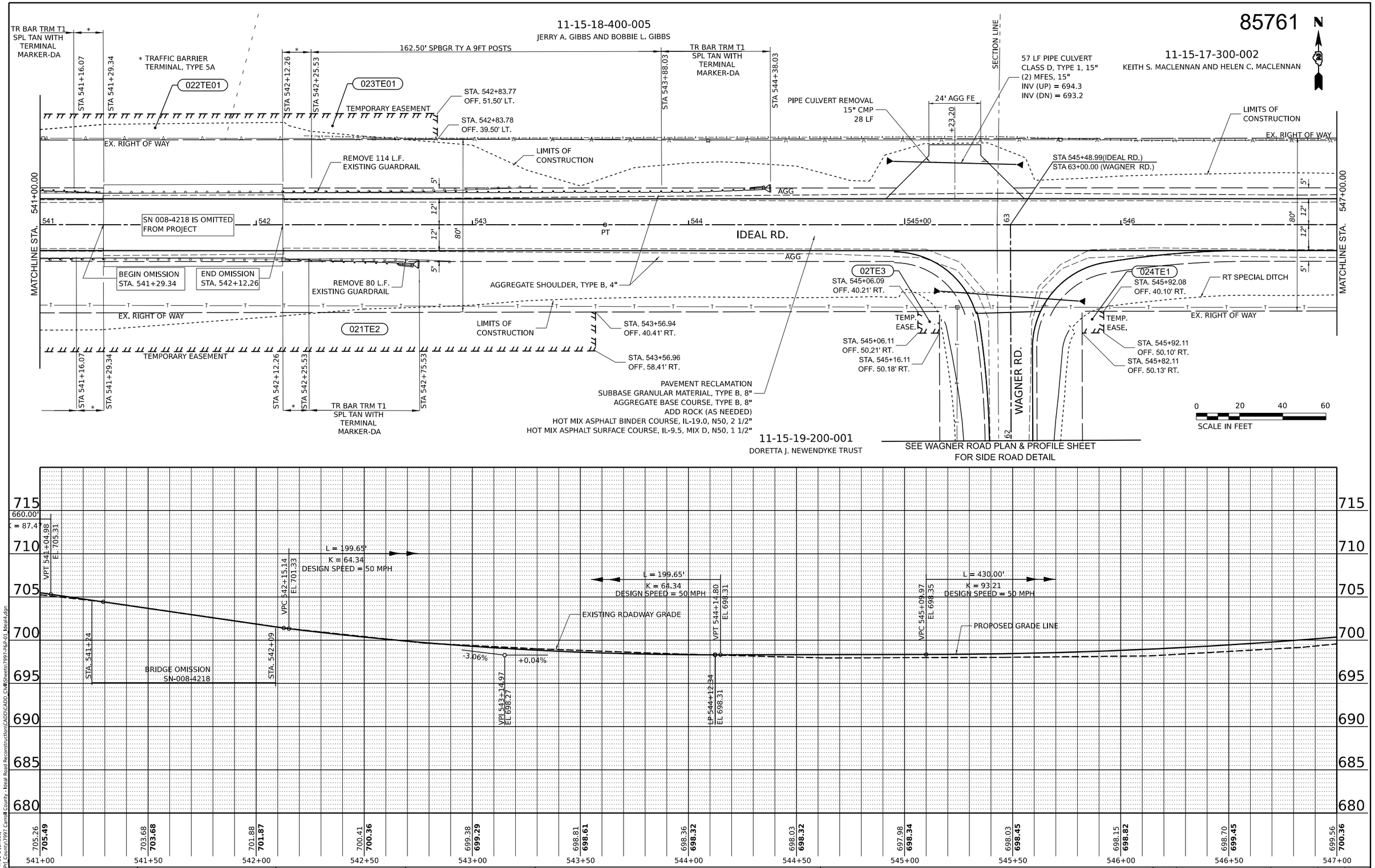

MODEL: Ideal_PR-30-1 [Sheet]
FILE NAME: R:\Proj_County\1997 Carroll County - Ideal Road Reconstruction\CADD\CADD_Civil\Sheets\1997-P&P-01_Ideal4.dgn

CHASTAIN & ASSOCIATES LLC
CONSULTING ENGINEERS

USER NAME = dwozniarski	DESIGNED -	REVISED -	
	DRAWN -	REVISED -	
PLOT SCALE = 0.16666633 ' / in.	CHECKED -	REVISED -	
PLOT DATE = 6/14/2024	DATE - 04/17/2024	REVISED -	

STATE OF ILLINOIS
DEPARTMENT OF TRANSPORTATION

IDEAL ROAD RECONSTRUCTION
PLAN AND PROFILE – IDEAL ROAD

SCALE: SCALE | SHEET 31 OF 46 SHEETS | STA. TO STA.

F.A.S. RTE.	SECTION	COUNTY	TOTAL SHEETS	SHEET NO.
1084	20-00102-00-PV	CARROLL	217	50

CONTRACT NO. 85761

ILLINOIS | FED. AID PROJECT

85761

N

PAVEMENT RECLAMATION
SUBBASE GRANULAR MATERIAL, TYPE B, 8"
AGGREGATE BASE COURSE, TYPE B, 8"
ADD ROCK (AS NEEDED)
HOT MIX ASPHALT BINDER COURSE, IL-19.0, N50, 2 1/2"
HOT MIX ASPHALT SURFACE COURSE, IL-9.5, MIX D, N50, 1 1/2"

11-15-17-300-002
KEITH S. MACLENNAN
AND HELEN C. MACLENNAN

PIPE CULVERT REMOVAL
15" CMP
30 LF

65 LF PIPE CULVERT
CLASS D, TYPE 1, 15"
(2) MFES, 15"
INV (UP) = 712.9
INV (DN) = 710.6

PIPE CULVERT REMOVAL
15" CMP
28 LF

24' AGG FE

+77.25

PAD TO REMAIN

12' HMA PE

+79.04

34 LF PIPE CULVERT
CLASS D, TYPE 1, 15"
(2) MFES, 15"
INV (UP) = 715.5
INV (DN) = 714.7

H.

LIMITS OF CONSTRUCTION

EX. RIGHT OF WAY

LIMITS OF CONSTRUCTION

LT SPECIAL DITCH

MATCHLINE STA. 547+00.00

5'

AGG

12'

12'

80'

547 548 549 550+00 551 552

PC

IDEAL RD.

AGG

AGG

5'

RT SPECIAL DITCH

HMA TURNOUT

MATCHLINE STA. 553+00.00

LIMITS OF CONSTRUCTION

EX. RIGHT OF WAY

STA. 549+58.00
OFF. 39.62' RT.

STA. 549+58.02
OFF. 49.62' RT.

TEMPORARY EASEMENT

024TE2

+79.04

24' AGG FE

STA. 551+58.00
OFF. 39.36' RT.

STA. 551+58.02
OFF. 49.36' RT.

EX. RIGHT OF WAY

PIPE CULVERT REMOVAL
15" CMP
28 LF

39 LF PIPE CULVERT
CLASS D, TYPE 1, 15"
(2) MFES, 15"
INV (UP) = 713.8
INV (DN) = 712.9

LIMITS OF CONSTRUCTION

AGGREGATE SHOULDER, TYPE B, 4"

11-15-20-100-001
DORETTA J. NEWENDYKE TRUST

0 20 40 60
SCALE IN FEET

720 715 710 705 700 695 690 685

L = 430.00'
K = 93.21
DESIGN SPEED
= 50 MPH

VPT 549+39.97
EL 708.43

VPC 549+94.96
EL 710.99

L = 380.00'
K = 84.10
DESIGN SPEED = 50 MPH

VPI 551
EL

EXISTING ROADWAY GRADE

PROPOSED GRADE LINE

+0.04%

+4.65%

VPI 547+24.97
EL 698.43

LT 547+50.00
698+50

RT 548+10.00
698.50

4.00%

4.00%

4.60%

LT 549+00.00
704.50

LT SPECIAL DITCH

3.50%

LT 549+50.00
707.00

RT SPECIAL DITCH

4.60%

LT 550+00.00
709.00

RT 550+50.00
709.50

4.17%

5.00%

RT 551+00.00
712.00'

+4.65%

+0.13%

1.50%

RT 551+50.00
712.75

LT 551+50.00
715.00

3.00%

2.30%

LT 552+50.00
718.00

RT 552+50.00
715.00

1.00%

1.00%

LT 553+00
717.50

RT 553+00
715.50

699.56 **700.36** 700.80 **701.53** 702.50 **702.97** 704.37 **704.68** 706.36 **706.66** 708.54 **708.90** 710.82 **711.22** 712.93 **713.37** 714.89 **715.22** 716.58 **716.77** 717.85 **718.02** 718.52 **718.98** 719.01 **719.64**

547+00 547+50 548+00 548+50 549+00 549+50 550+00 550+50 551+00 551+50 552+00 552+50 553+00

MODEL: Ideal_PR-31-1 [Sheet]
FILE NAME: S:\Civil_Projects\Carroll County - Ideal Road Reconstruction\CADD\CADD_Civil\Sheets\7997-P&P-01_Ideal4.dgn

CHASTAIN & ASSOCIATES LLC
CONSULTING ENGINEERS

USER NAME = dwozniarski	DESIGNED -	REVISED -	
	DRAWN -	REVISED -	
PLOT SCALE = 0.16666633 ' / in.	CHECKED -	REVISED -	
PLOT DATE = 6/14/2024	DATE - 04/17/2024	REVISED -	

STATE OF ILLINOIS
DEPARTMENT OF TRANSPORTATION

IDEAL ROAD RECONSTRUCTION
PLAN AND PROFILE – IDEAL ROAD

SCALE: SCALE | SHEET 32 OF 46 SHEETS | STA. TO STA.

F.A.S. RTE.	SECTION	COUNTY	TOTAL SHEETS	SHEET NO.
1084	20-00102-00-PV	CARROLL	217	51

CONTRACT NO. 85761

ILLINOIS | FED. AID PROJECT

85761

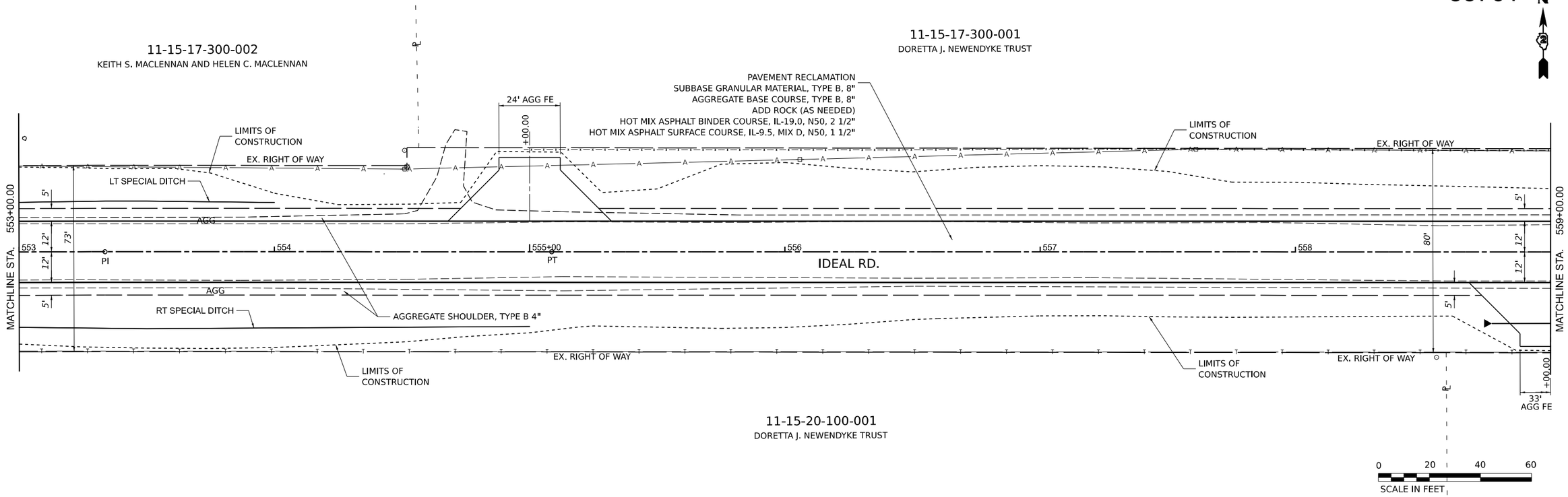

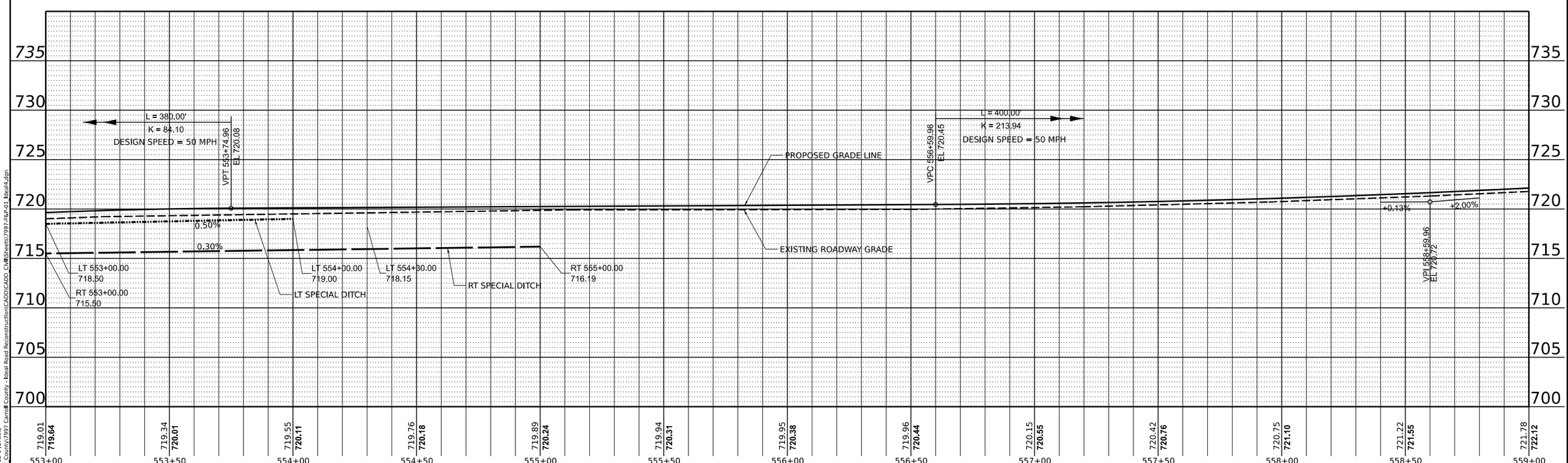

MODEL: Ideal_PR-32-1 [Sheet]
FILE NAME: S:\Proj_County\1997 Carroll County - Ideal Road Reconstruction\CADD\CADD_Civil\Sheets\1997-P&P-01 Ideal4.dgn

CHASTAIN & ASSOCIATES LLC
CONSULTING ENGINEERS

USER NAME = dwozniarski	DESIGNED -	REVISED -	
	DRAWN -	REVISED -	
PLOT SCALE = 0.16666633 ' / in.	CHECKED -	REVISED -	
PLOT DATE = 6/14/2024	DATE - 04/17/2024	REVISED -	

STATE OF ILLINOIS
DEPARTMENT OF TRANSPORTATION

IDEAL ROAD RECONSTRUCTION
PLAN AND PROFILE – IDEAL ROAD

SCALE: SCALE | SHEET 33 OF 46 SHEETS | STA. TO STA.

F.A.S. RTE.	SECTION	COUNTY	TOTAL SHEETS	SHEET NO.
1084	20-00102-00-PV	CARROLL	217	52

CONTRACT NO. 85761

ILLINOIS | FED. AID PROJECT

85761

N

11-15-17-300-001
DORETTA J. MEWENDYKE TRUST

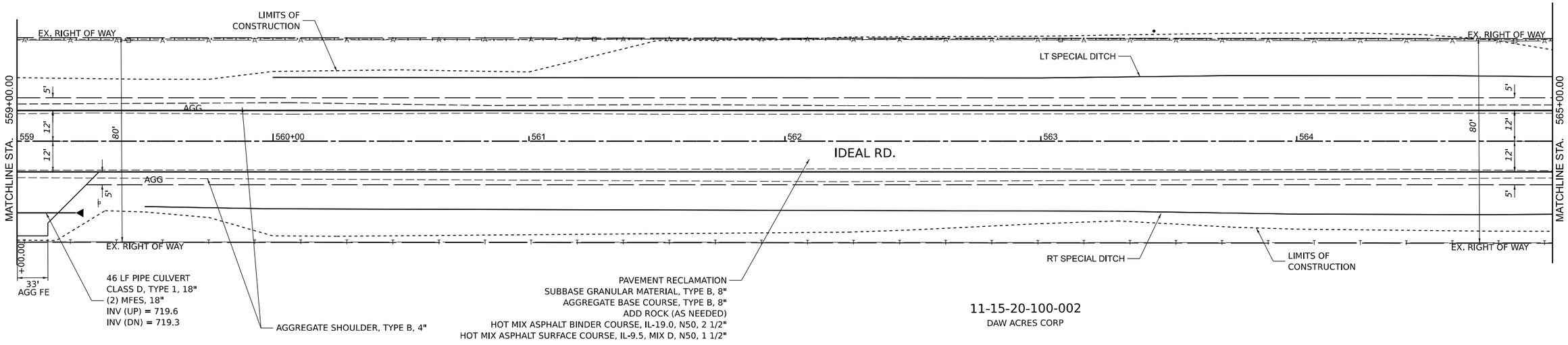

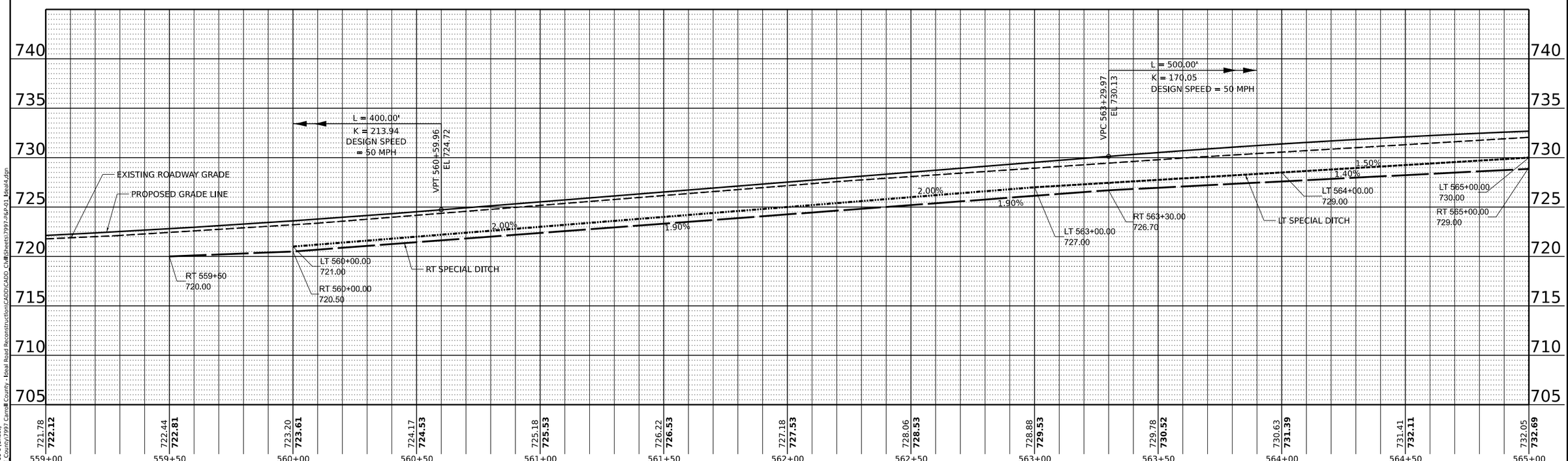

MODEL: Ideal_PR-33-1 [Sheet]
FILE NAME: R:\Proj_County\1997 Carroll County - Ideal Road Reconstruction\CADD\CADD_Civil\Sheets\1997-P&P-01_Ideal4.dgn

CHASTAIN & ASSOCIATES LLC
CONSULTING ENGINEERS

USER NAME = dwozniarski	DESIGNED -	REVISED -	
	DRAWN -	REVISED -	
PLOT SCALE = 0.16666633 ' / in.	CHECKED -	REVISED -	
PLOT DATE = 6/14/2024	DATE - 04/17/2024	REVISED -	

STATE OF ILLINOIS
DEPARTMENT OF TRANSPORTATION

IDEAL ROAD RECONSTRUCTION
PLAN AND PROFILE – IDEAL ROAD

SCALE: SCALE | SHEET 34 OF 46 SHEETS | STA. | TO STA.

F.A.S. RTE.	SECTION	COUNTY	TOTAL SHEETS	SHEET NO.
1084	20-00102-00-PV	CARROLL	217	53

CONTRACT NO. 85761

ILLINOIS | FED. AID PROJECT

85761

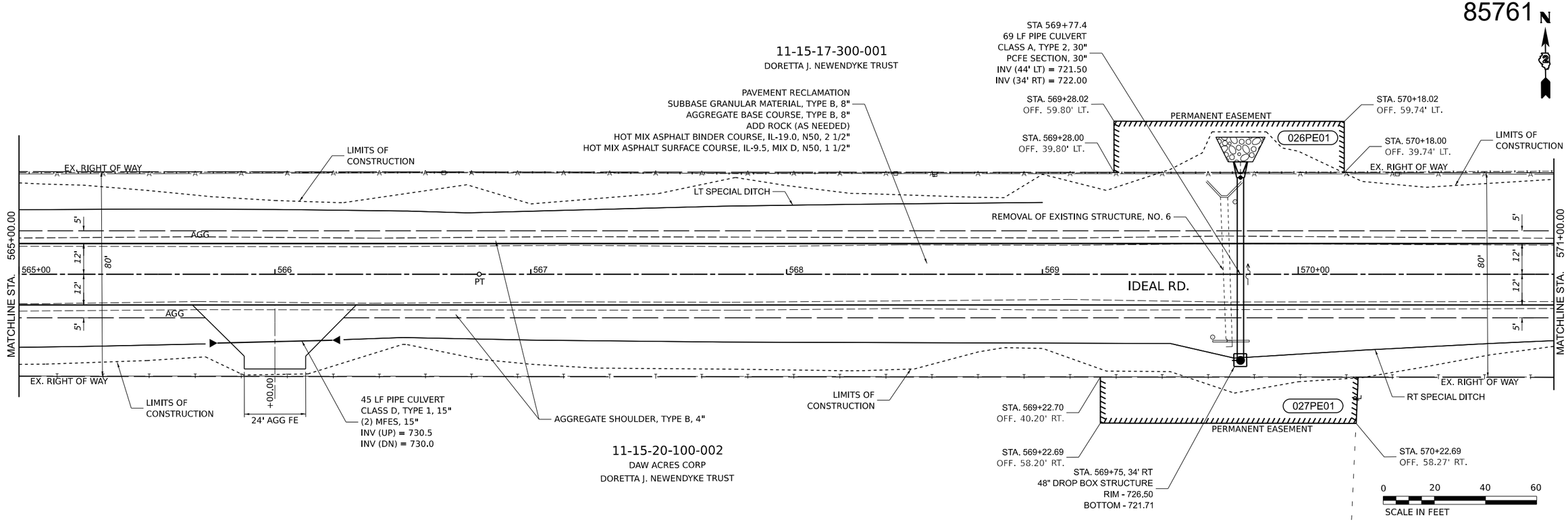

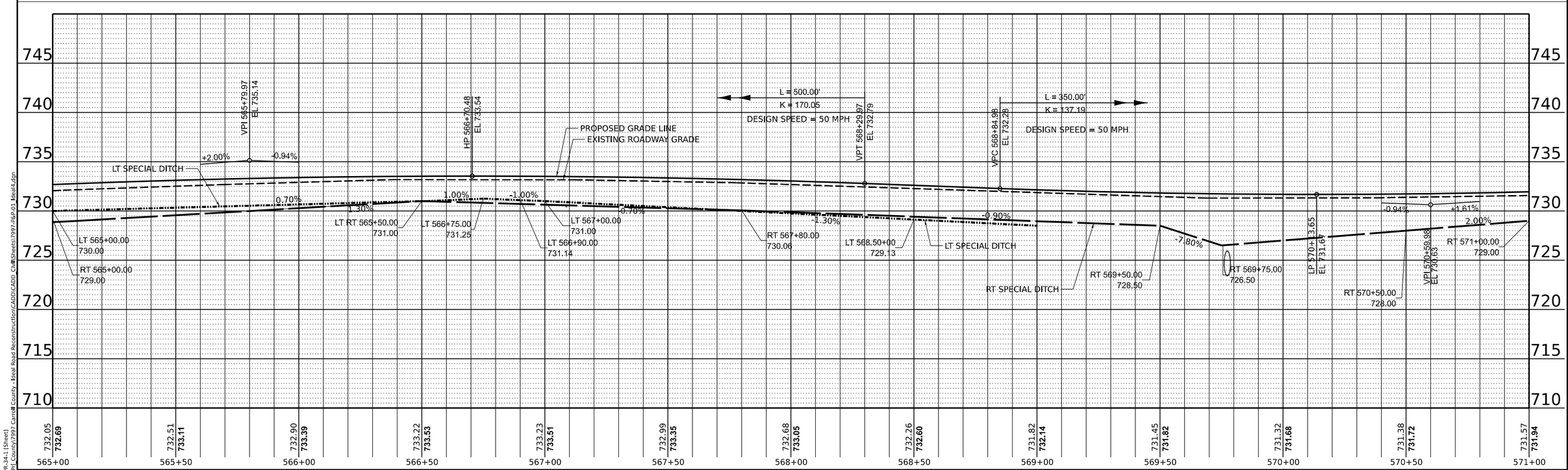

MODEL: Ideal_PR-34-1 [Sheet]
FILE NAME: ...Ideal_County\7993_Carroll County - Ideal Road Reconstruction\CADD\CADD_CivilSheets\7993-PEP-01_Ideal4.dgn

CHASTAIN & ASSOCIATES LLC
CONSULTING ENGINEERS

USER NAME = dwozniarski	DESIGNED -	REVISED -	
	DRAWN -	REVISED -	
PLOT SCALE = 0.16666633 ' / in.	CHECKED -	REVISED -	
PLOT DATE = 6/14/2024	DATE - 04/17/2024	REVISED -	

STATE OF ILLINOIS
DEPARTMENT OF TRANSPORTATION

IDEAL ROAD RECONSTRUCTION
PLAN AND PROFILE – IDEAL ROAD

SCALE: SCALE | SHEET 35 OF 46 SHEETS | STA. | TO STA.

F.A.S. RTE.	SECTION	COUNTY	TOTAL SHEETS	SHEET NO.
1084	20-00102-00-PV	CARROLL	217	54

CONTRACT NO. 85761

ILLINOIS | FED. AID PROJECT

85761

PR CURVE PRCL-DR
PI STA = 576+33.26
Δ = 00°18'21" (LT)
D = 00°04'50"
R = 71,041.50'
T = 189.64'
L = 379.28'
E = 0.25'
e = ____
TR = ____
SE RUN = ____
PC STA = 574+43.62
PT STA = 578+22.90

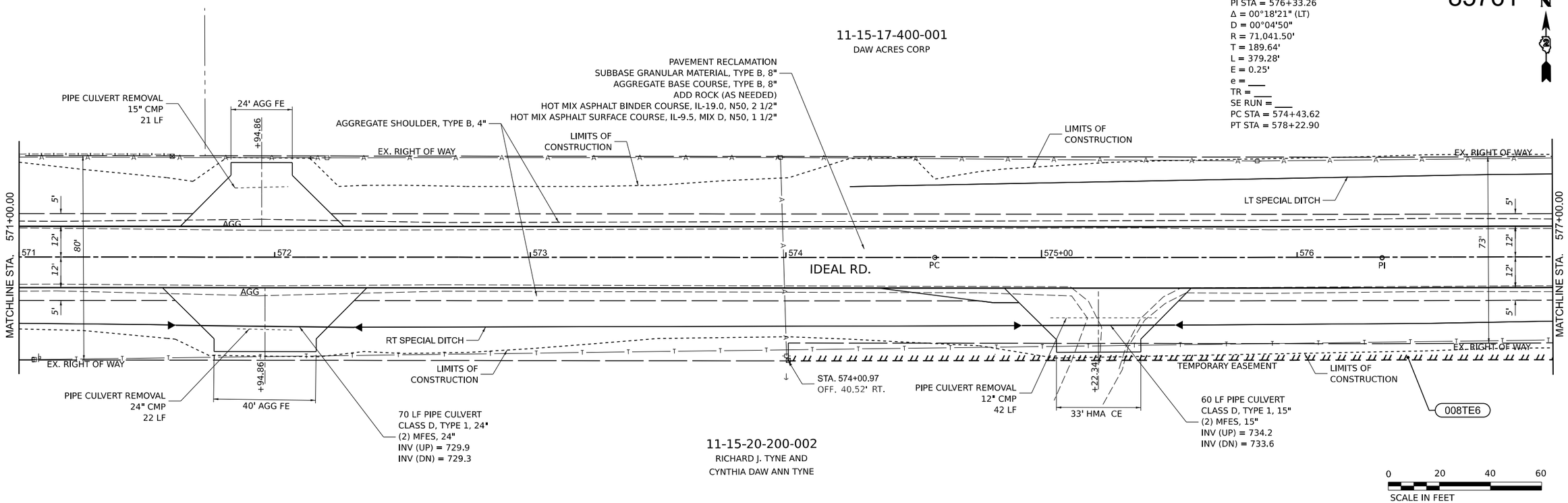

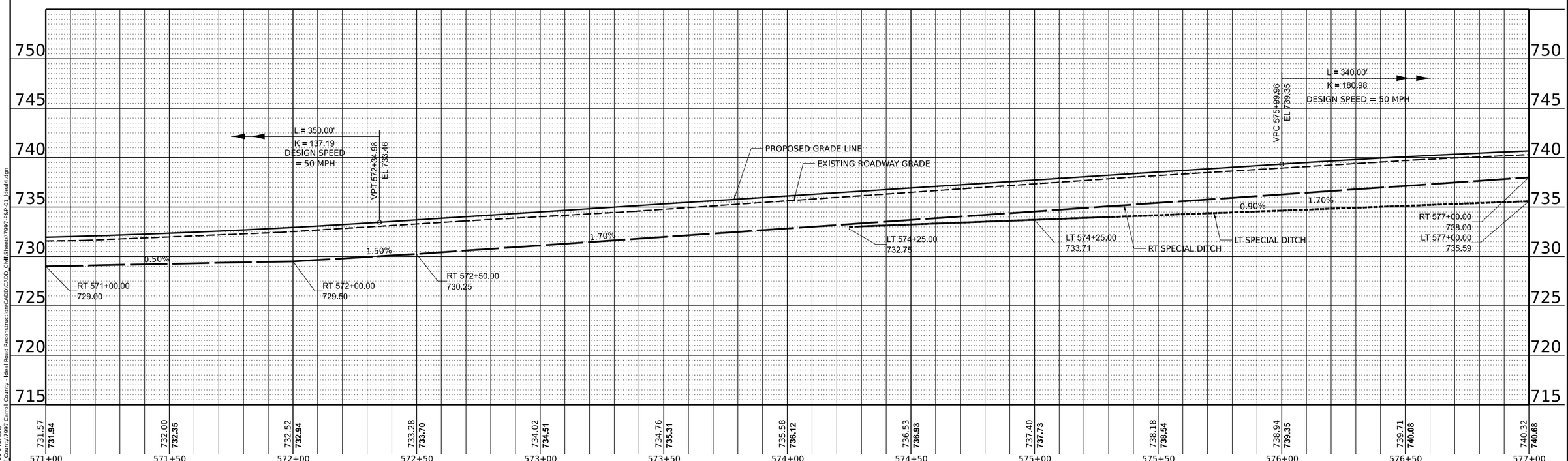

MODEL: Ideal_PR-35-1 [Sheet]
FILE NAME: R:\Proj_County\1997_Carroll County - Ideal Road Reconstruction\CADD\CADD_Civil\Sheets\1997-P&P-01_Ideal4.dgn

CHASTAIN & ASSOCIATES LLC CONSULTING ENGINEERS	USER NAME = dwozniarski	DESIGNED -	REVISED -	STATE OF ILLINOIS DEPARTMENT OF TRANSPORTATION	IDEAL ROAD RECONSTRUCTION PLAN AND PROFILE – IDEAL ROAD
		DRAWN -	REVISED -		
	PLOT SCALE = 0.16666633 ' / in.	CHECKED -	REVISED -		
	PLOT DATE = 6/14/2024	DATE - 04/17/2024	REVISED -		SCALE: SCALE SHEET 36 OF 46 SHEETS STA. TO STA.

F.A.S. RTE.	SECTION	COUNTY	TOTAL SHEETS	SHEET NO.
1084	20-00102-00-PV	CARROLL	217	55

CONTRACT NO. 85761

ILLINOIS | FED. AID PROJECT

85761

N

11-15-17-400-001
DAW ACRES CORP

PAVEMENT RECLAMATION
SUBBASE GRANULAR MATERIAL, TYPE B, 8"
AGGREGATE BASE COURSE, TYPE B, 8"
ADD ROCK (AS NEEDED)
HOT MIX ASPHALT BINDER COURSE, IL-19.0, N50, 2 1/2"
HOT MIX ASPHALT SURFACE COURSE, IL-9.5, MIX D, N50, 1 1/2"

LT SPECIAL DITCH

AGGREGATE SHOULDER, TYPE B, 4"

LIMITS OF CONSTRUCTION

EX. RIGHT OF WAY

MATCHLINE STA. 577+00.00

MATCHLINE STA. 583+00.00

5' 12' 12' 5' 73' 80'

AGG

577 578 579 580+00 581 582

PT PC

IDEAL RD.

TEMPORARY EASEMENT

LIMITS OF CONSTRUCTION

RT SPECIAL DITCH

027TE1

PIPE CULVERT REMOVAL
12" CMP
23 LF

STA. 578+16.00
OFF. 40.54' RT.

11-15-20-100-002
DAW ACRES CORP

11-15-20-200-001
DAW ACRES CORP

0 20 40 60
SCALE IN FEET

755 750 745 740 735 730 725 720

L = 340.00'
K = 180.98
DESIGN SPEED
= 50 MPH

VPI 577+69.96 EL 742.09

HP 578+91.93 EL 741.70

VPT 579+39.96 EL 741.64

+1.61% -0.27% 1.00% 0.90% 1.00% -0.40%

PROPOSED GRADE LINE

EXISTING ROADWAY GRADE

RT SPECIAL DITCH

RT 577+00.00 738.00

LT 577+00.00 735.59

LT SPECIAL DITCH

RT 578+00.00 739.00

LT 578+50.00 737.00

RT 578+40.00 739.50

LT 579+00.00 737.50

RT 578+70.00 739.00

RT 583+00.00 737.28

740.32 **740.68** 577+00
740.79 **741.15** 577+50
741.11 **741.47** 578+00
741.30 **741.65** 578+50
741.22 **741.70** 579+00
741.17 **741.61** 579+50
741.10 **741.48** 580+00
740.98 **741.35** 580+50
740.79 **741.21** 581+00
740.71 **741.08** 581+50
740.60 **740.95** 582+00
740.45 **740.82** 582+50
740.27 **740.68** 583+00

MODEL: Ideal_PR-36-1 [Sheet]
FILE NAME: R:\Proj_County\1997 Carroll County - Ideal Road Reconstruction\CADD\CADD_Civil\Sheets\1997-P&P-01_Ideal4.dgn

CHASTAIN & ASSOCIATES LLC
CONSULTING ENGINEERS

USER NAME = dwozniarski	DESIGNED -	REVISED -	
	DRAWN -	REVISED -	
PLOT SCALE = 0.16666633 ' / in.	CHECKED -	REVISED -	
PLOT DATE = 6/14/2024	DATE - 04/17/2024	REVISED -	

STATE OF ILLINOIS
DEPARTMENT OF TRANSPORTATION

IDEAL ROAD RECONSTRUCTION
PLAN AND PROFILE – IDEAL ROAD

SCALE: SCALE | SHEET 37 OF 46 SHEETS | STA. TO STA.

F.A.S. RTE.	SECTION	COUNTY	TOTAL SHEETS	SHEET NO.
1084	20-00102-00-PV	CARROLL	217	56

CONTRACT NO. 85761

ILLINOIS | FED. AID PROJECT

85761

N

11-15-17-400-001
DAW ACRES CORP

PIPE CULVERT REMOVAL
15" CMP
27 LF

PAVEMENT RECLAMATION
SUBBASE GRANULAR MATERIAL, TYPE B, 8"
AGGREGATE BASE COURSE, TYPE B, 8"
ADD ROCK (AS NEEDED)
HOT MIX ASPHALT BINDER COURSE, IL-19.0, N50, 2 1/2"
HOT MIX ASPHALT SURFACE COURSE, IL-9.5, MIX D, N50, 1 1/2"

STA 586+01.0
48 LF PIPE CULVERT
CLASS A, TYPE 1, 24"
(2) PCFE SECTION, 24"
INV (32' LT) = 733.50
INV (29' RT) = 735.0

PIPE CULVERT REMOVAL
24" CMP
54 LF

STA. 585+74.31
OFF. 59.99' LT.

STA. 585+74.32
OFF. 39.99' LT.

029PE01

PERM. EASEMENT

STA. 586+24.31
OFF. 59.99' LT.

STA. 586+24.32
OFF. 39.99' LT.

LIMITS OF CONSTRUCTION

EX. RIGHT OF WAY

LIMITS OF CONSTRUCTION

EX. RIGHT OF WAY

MATCHLINE STA. 583+00.00

MATCHLINE STA. 589+00.00

5'

AGG

12'

80'

583

584

585+00

586

PT

587

588

PI

IDEAL RD.

STA. 585+81.84
OFF. 40.01' RT.

STA. 586+16.84
OFF. 40.01' RT.

RT SPECIAL DITCH

EX. RIGHT OF WAY

LIMITS OF CONSTRUCTION

+00.00

24' AGG FE

56 LF PIPE CULVERT
CLASS D, TYPE 1, 15"
(2) MFES, 15"
INV (UP) = 736.8
INV (DN) = 736.6

AGGREGATE SHOULDER, TYPE B, 4"

STA. 585+36.64
OFF. 40.01' RT.

STA. 585+36.64
OFF. 50.01' RT.

TEMPORARY EASEMENT

028TE1

STA. 585+81.64
OFF. 50.01' RT.

STA. 585+81.84
OFF. 56.01' RT.

PERM. EASEMENT

028PE1

028TE2

TEMPORARY EASEMENT

STA. 586+16.84
OFF. 50.01' RT.

STA. 586+16.84
OFF. 56.01' RT.

STA. 586+50.00
OFF. 40.30' RT.

STA. 586+50.00
OFF. 50.34' RT

11-15-20-200-001
DAW ACRES CORP

0 20 40 60
SCALE IN FEET

750
745
740
735
730
725
720
715

PROPOSED GRADE LINE

EXISTING ROADWAY GRADE

L = 340.00'
K = 936.47
DESIGN SPEED = 50 MPH

VPC 584+54.96
EL 740.27

-0.40%

RT 583+00.00
737.28

RT SPECIAL DITCH

RT 585+50.00
736.28

-2.60%

RT 586+00.00
735.00

-0.27%

+0.10%

VPI 586+74.96
EL 739.62

3.50%

RT 586+50.00
736.50

LP 587+03.48
EL 739.94

L = 340.00'
K = 936.47
DESIGN SPEED
= 50 MPH

VPT 587+94.96
EL 739.99

0.50%

RT SPECIAL DITCH

L = 340.00'
K = 1413.49

VPC 588+84.96
EL 740.07

RT 589+00.00
737.75

740.27 **740.68** | 740.12 **740.55** | 739.99 **740.42** | 739.90 **740.28** | 739.81 **740.16** | 739.69 **740.07** | 739.53 **740.00** | 739.59 **739.96** | 739.56 **739.94** | 739.55 **739.95** | 739.56 **739.99** | 739.59 **740.04** | 739.54 **740.09**

583+00 | 583+50 | 584+00 | 584+50 | 585+00 | 585+50 | 586+00 | 586+50 | 587+00 | 587+50 | 588+00 | 588+50 | 589+00

MODEL: Ideal_PR-37-1 [Sheet]
FILE NAME: ...\Boyd_County\7997_Carroll County - Ideal Road Reconstruction\CADD\CADD_Civil\Sheets\7997-P&P-01_Ideal4.dgn

CHASTAIN & ASSOCIATES LLC
CONSULTING ENGINEERS

USER NAME = dwozniarski	DESIGNED -	REVISED -	
	DRAWN -	REVISED -	
PLOT SCALE = 0.16666633 ' / in.	CHECKED -	REVISED -	
PLOT DATE = 6/14/2024	DATE - 04/17/2024	REVISED -	

STATE OF ILLINOIS
DEPARTMENT OF TRANSPORTATION

IDEAL ROAD RECONSTRUCTION
PLAN AND PROFILE – IDEAL ROAD

SCALE: SCALE | SHEET 38 OF 46 SHEETS | STA. TO STA.

F.A.S. RTE.	SECTION	COUNTY	TOTAL SHEETS	SHEET NO.
1084	20-00102-00-PV	CARROLL	217	57

CONTRACT NO. 85761

ILLINOIS | FED. AID PROJECT

85761

PR CURVE PRCL-DR
PI STA = 596+03.90
Δ = 74°48'54" (LT)
D = 07°30'00"
R = 763.94'
T = 584.23'
L = 997.53'
E = 197.80'
e = 8.0%
TR = 48'
SE RUN = 192'
PC STA = 590+19.67
PT STA = 600+17.19

45 LF PIPE CULVERT
CLASS D, TYPE 1, 15"
(2) MFES, 15"
INV (UP) = 735.3
INV (DN) = 735.1

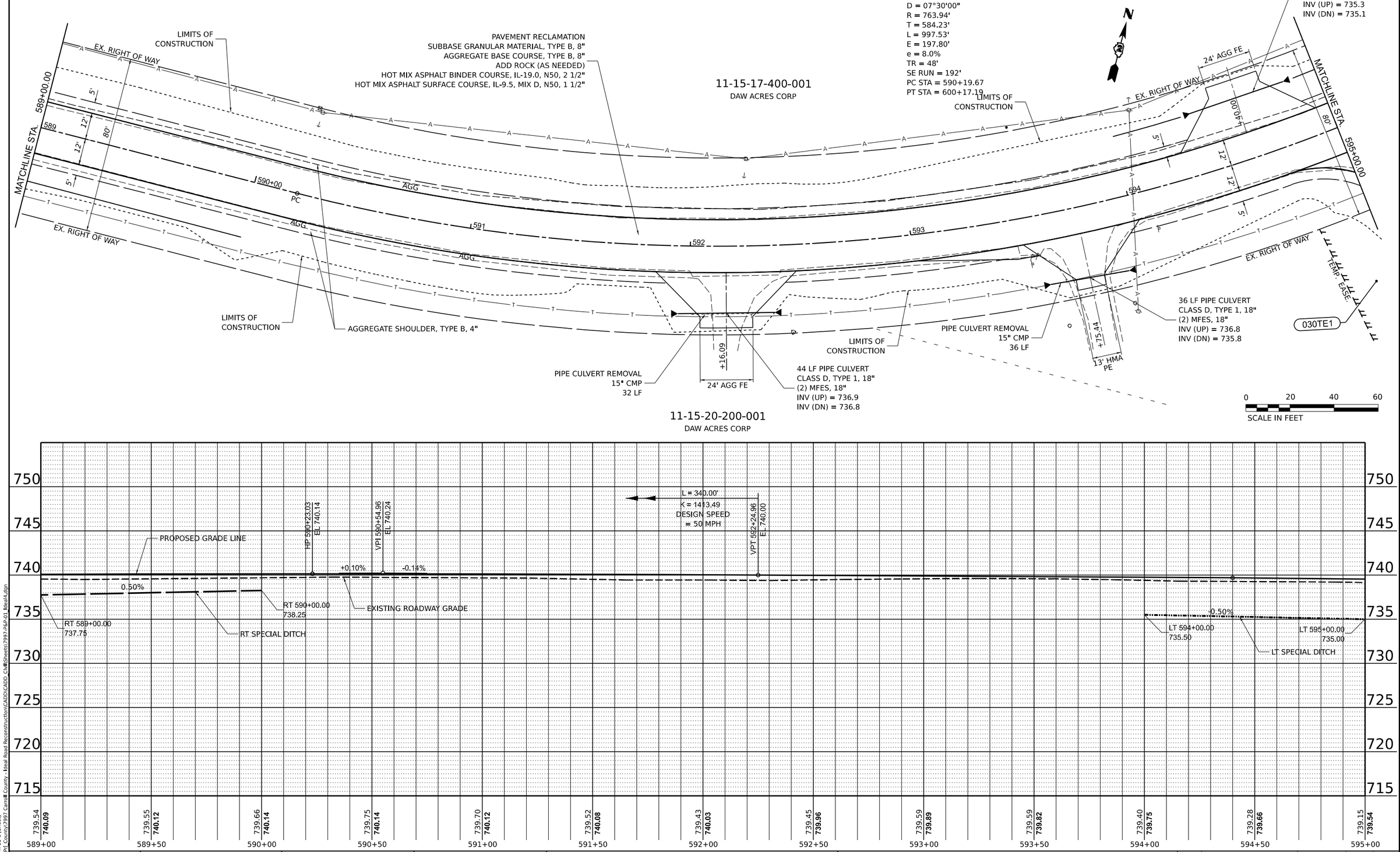

MODEL: Ideal_PR-38-1 [Sheet]
FILE NAME: 85761_Carroll County - Ideal Road Reconstruction\CADD\CADD_Civil\Sheets\7997-P&P-01_Ideal4.dgn

CHASTAIN & ASSOCIATES LLC
CONSULTING ENGINEERS

USER NAME = dwozniarski	DESIGNED -	REVISED -	
	DRAWN -	REVISED -	
PLOT SCALE = 0.16666633 ' / in.	CHECKED -	REVISED -	
PLOT DATE = 6/14/2024	DATE - 04/17/2024	REVISED -	

STATE OF ILLINOIS
DEPARTMENT OF TRANSPORTATION

IDEAL ROAD RECONSTRUCTION
PLAN AND PROFILE – IDEAL ROAD

SCALE: SCALE | SHEET 39 OF 46 SHEETS | STA. TO STA.

F.A.S. RTE.	SECTION	COUNTY	TOTAL SHEETS	SHEET NO.
1084	20-00102-00-PV	CARROLL	217	58

CONTRACT NO. 85761
ILLINOIS | FED. AID PROJECT

85761

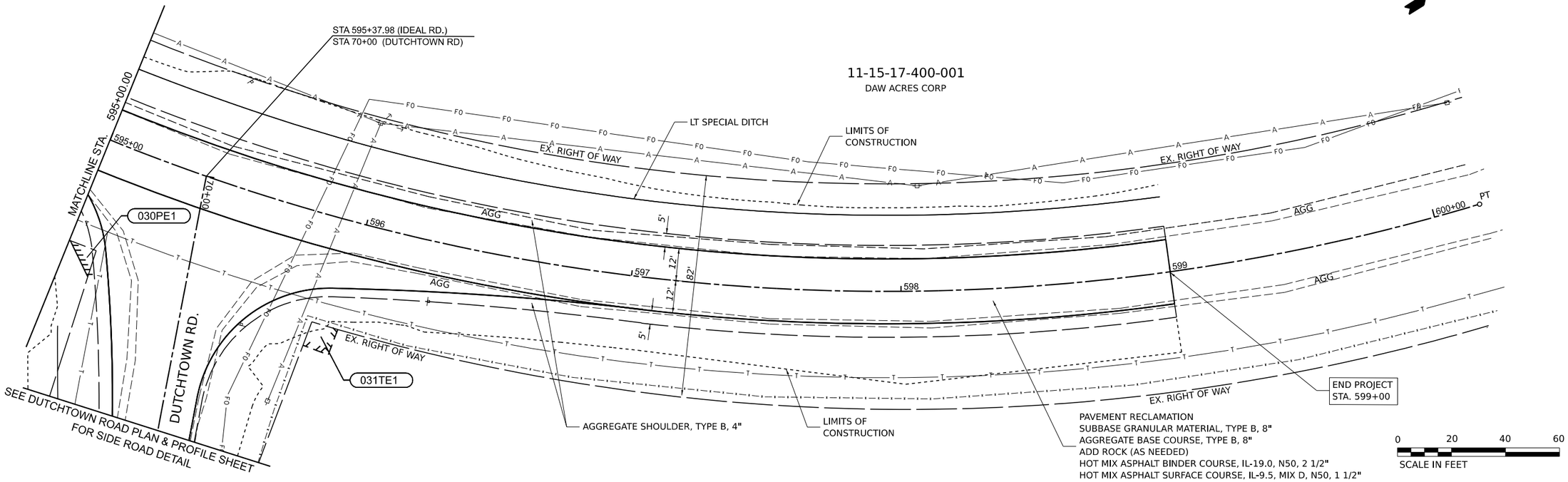

11-15-16-300-005
LIVENGOOD FAMILY BEEF PARTNERSHIP

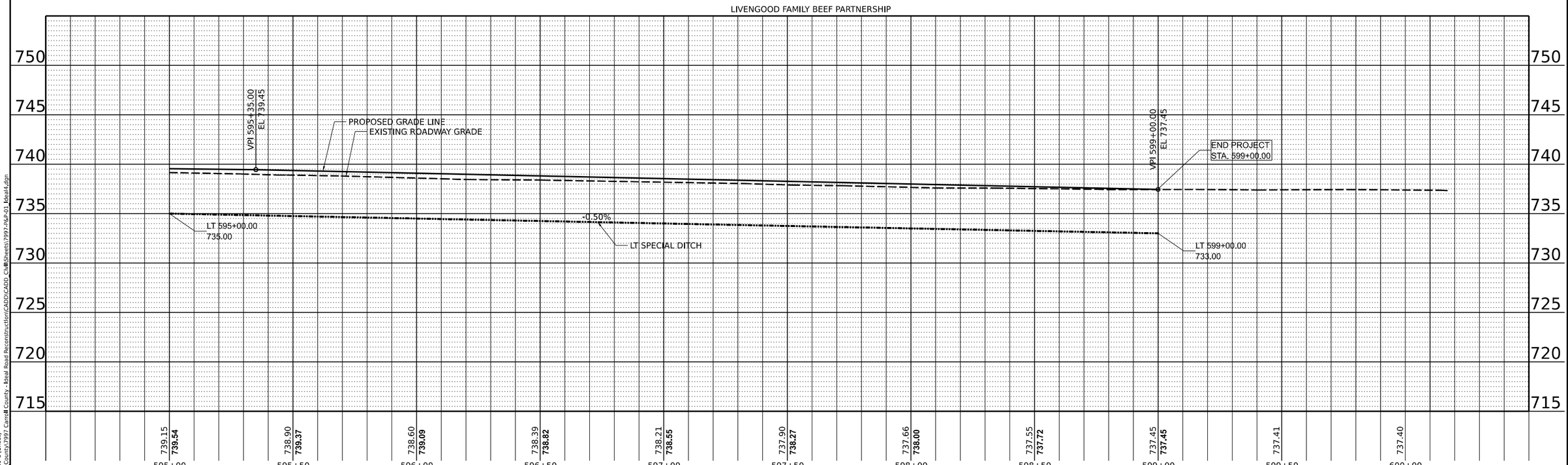

MODEL: Ideal_PR-39-1 [Sheet]
FILE NAME: R:\Proj_County\7997_Carroll County - Ideal Road Reconstruction\CADD\CADD_Civil\Sheets\7997-P&P-01_Ideal4.dgn

CHASTAIN & ASSOCIATES LLC
CONSULTING ENGINEERS

USER NAME = dwozniarski	DESIGNED -	REVISED -	
	DRAWN -	REVISED -	
PLOT SCALE = 0.16666633 ' / in.	CHECKED -	REVISED -	
PLOT DATE = 6/14/2024	DATE - 04/17/2024	REVISED -	

STATE OF ILLINOIS
DEPARTMENT OF TRANSPORTATION

IDEAL ROAD RECONSTRUCTION
PLAN AND PROFILE – IDEAL ROAD

SCALE: SCALE | SHEET 40 OF 46 SHEETS | STA. TO STA.

F.A.S. RTE.	SECTION	COUNTY	TOTAL SHEETS	SHEET NO.
1084	20-00102-00-PV	CARROLL	217	59

CONTRACT NO. 85761

ILLINOIS | FED. AID PROJECT

85761

INTERSECTION LAYOUT

PT	STA	OFFSET	ELEV
A	387+13.20	12.00' LT	778.41
B	387+46.54	13.43' LT	776.23
C	387+79.62	17.75' LT	776.23
D	10+56.19	10.00' LT	773.79
E	10+76.60	11.11' RT	772.89
F	10+46.49	14.47' RT	773.83
G	388+76.92	12.00' LT	774.55

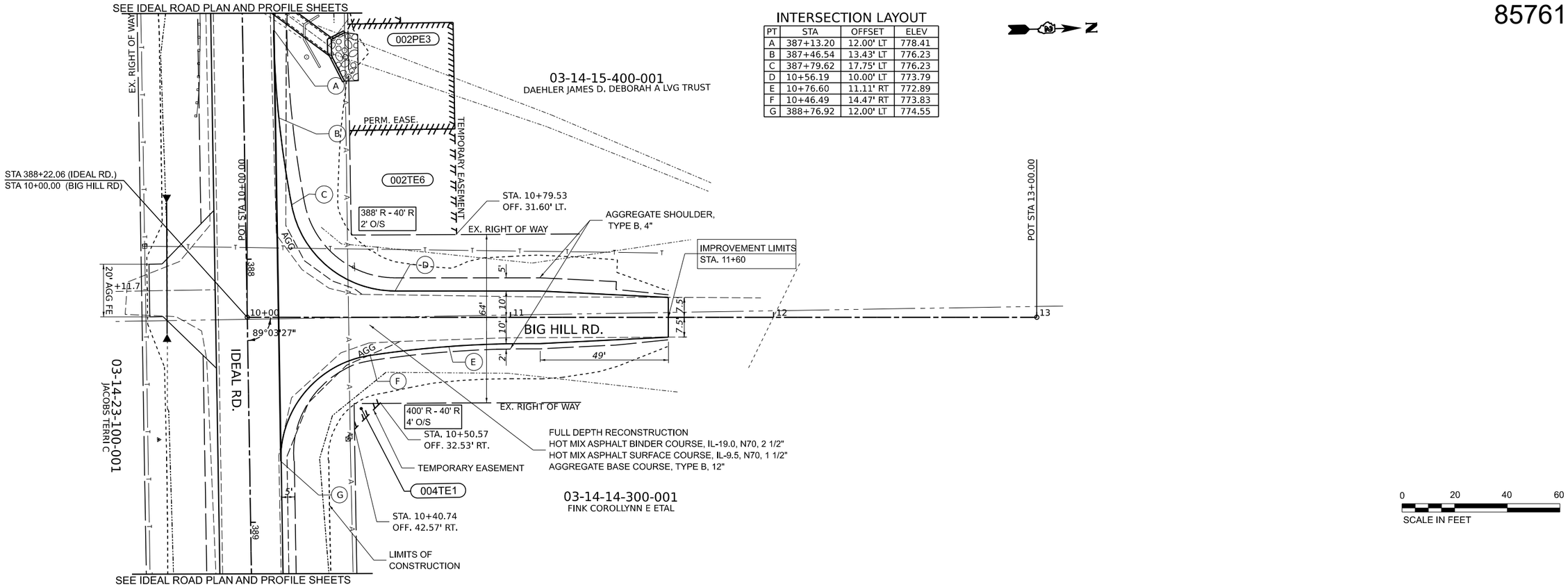

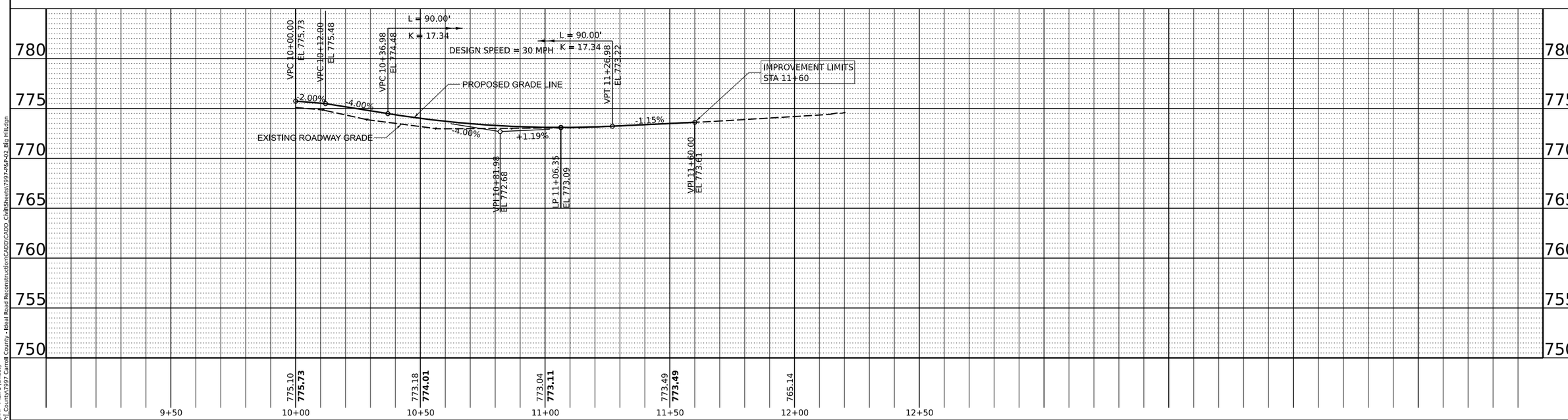

MODEL: PrCLBigHill - Plan 1 [Sheet]
FILE NAME: R:\Pl_County\7997 Carroll County - Ideal Road Reconstruction\CADD\CADD_Civil\Sheets\7997-PSR-02_Big Hill.dgn

CHASTAIN & ASSOCIATES LLC
CONSULTING ENGINEERS

USER NAME = dwozniarski	DESIGNED -	REVISED -
	DRAWN -	REVISED -
PLOT SCALE = 0.166666 ' / in.	CHECKED -	REVISED -
PLOT DATE = 6/14/2024	DATE - 04/17/2024	REVISED -

STATE OF ILLINOIS
DEPARTMENT OF TRANSPORTATION

IDEAL ROAD RECONSTRUCTION
PLAN AND PROFILE – BIG HILL ROAD

SCALE: #### | SHEET 1 OF 1 SHEETS | STA. TO STA.

F.A.S. RTE.	SECTION	COUNTY	TOTAL SHEETS	SHEET NO.
1084	20-00102-00-PV	CARROLL	217	60

CONTRACT NO. 85761

ILLINOIS | FED. AID PROJECT

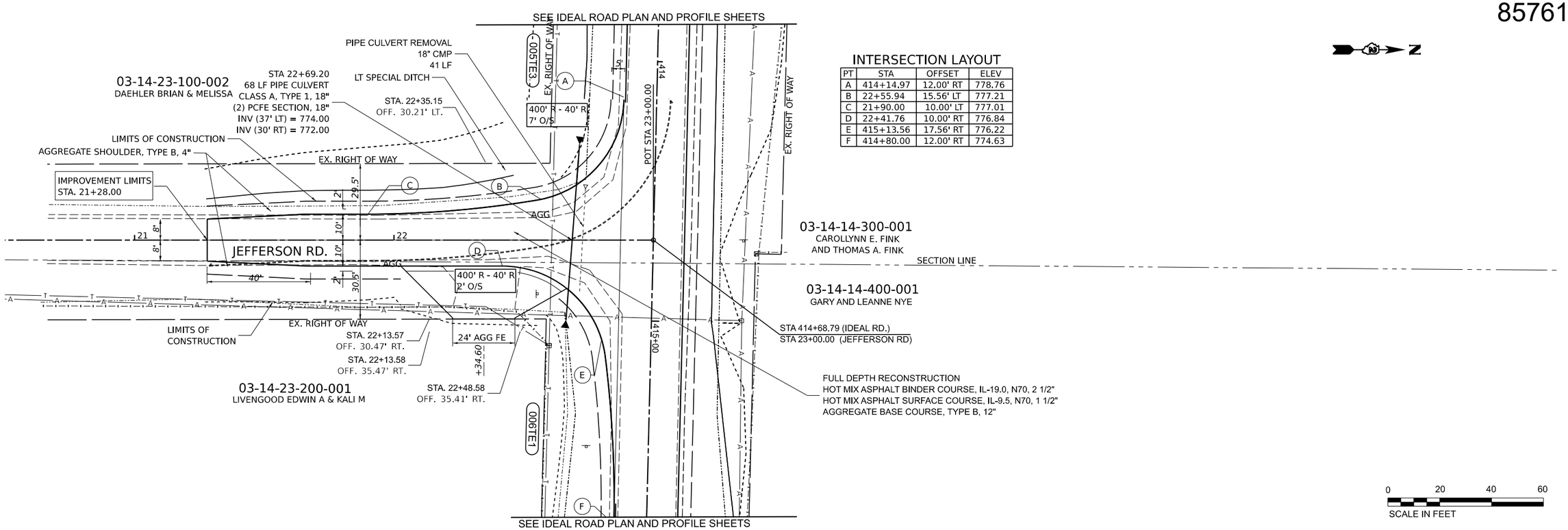

INTERSECTION LAYOUT

PT	STA	OFFSET	ELEV
A	414+14.97	12.00' RT	778.76
B	22+55.94	15.56' LT	777.21
C	21+90.00	10.00' LT	777.01
D	22+41.76	10.00' RT	776.84
E	415+13.56	17.56' RT	776.22
F	414+80.00	12.00' RT	774.63

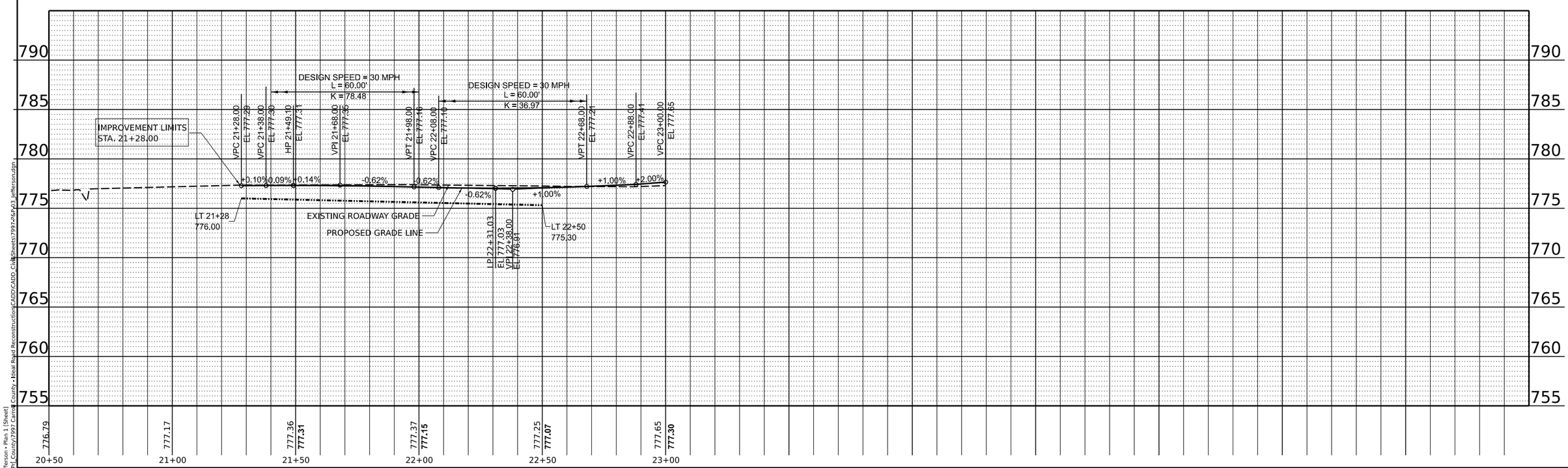

MODEL: PrCLjefferson - Plan 1 [Sheet]
FILE NAME: R:\PrC County\7997 Carroll County - Ideal Road Reconstruction\CADD\CADD_Civil\Sheets\7997-PrCP-03_Jefferson.dgn

CHASTAIN & ASSOCIATES LLC
CONSULTING ENGINEERS

USER NAME = dwozniarski	DESIGNED -	REVISED -
	DRAWN -	REVISED -
PLOT SCALE = 0.16666633 ' / in.	CHECKED -	REVISED -
PLOT DATE = 6/14/2024	DATE - 04/17/2024	REVISED -

STATE OF ILLINOIS
DEPARTMENT OF TRANSPORTATION

IDEAL ROAD RECONSTRUCTION
PLAN AND PROFILE – JEFFERSON ROAD

SCALE: SCALE | SHEET 1 OF 1 SHEETS | STA. | TO STA.

F.A.S. RTE.	SECTION	COUNTY	TOTAL SHEETS	SHEET NO.
1084	20-00102-00-PV	CARROLL	217	61

CONTRACT NO. 85761

ILLINOIS | FED. AID PROJECT

85761

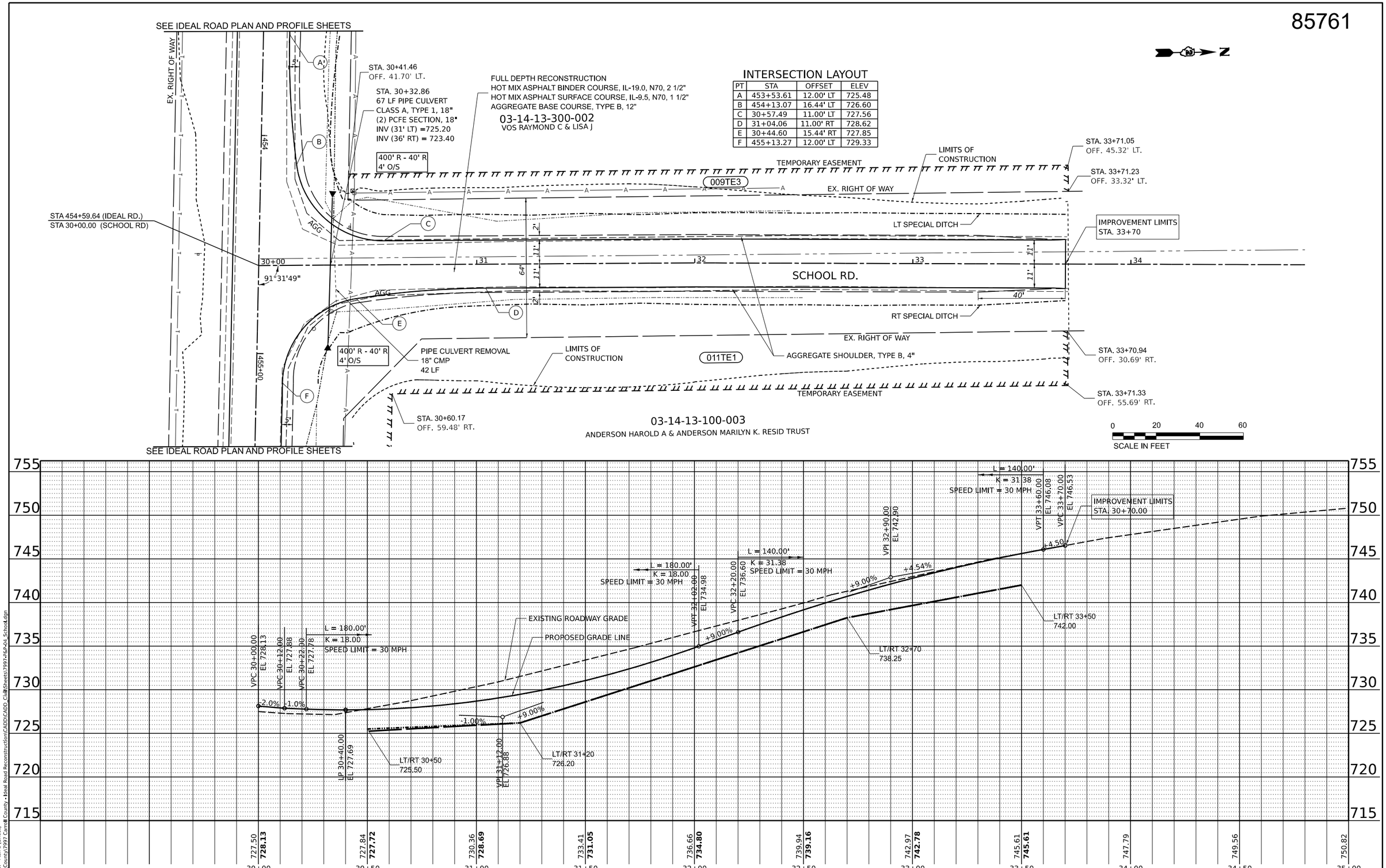

INTERSECTION LAYOUT

PT	STA	OFFSET	ELEV
A	453+53.61	12.00' LT	725.48
B	454+13.07	16.44' LT	726.60
C	30+57.49	11.00' LT	727.56
D	31+04.06	11.00' RT	728.62
E	30+44.60	15.44' RT	727.85
F	455+13.27	12.00' LT	729.33

MODEL: PrCLSchool - Plan 3 [Sheet]
FILE NAME: R:\PrJ_County\7997 Carroll County - Ideal Road Reconstruction\CADD\CADD_Civil\Sheets\7997-PR-Ala_School.dgn

CHASTAIN & ASSOCIATES LLC
CONSULTING ENGINEERS

USER NAME = dwozniarski	DESIGNED -	REVISED -	
	DRAWN -	REVISED -	
PLOT SCALE = 0.16666633 ' / in.	CHECKED -	REVISED -	
PLOT DATE = 6/14/2024	DATE - 04/17/2024	REVISED -	

STATE OF ILLINOIS
DEPARTMENT OF TRANSPORTATION

IDEAL ROAD RECONSTRUCTION
PLAN AND PROFILE – SCHOOL ROAD

SCALE: SCALE | SHEET 1 OF 1 SHEETS | STA. TO STA.

F.A.S. RTE.	SECTION	COUNTY	TOTAL SHEETS	SHEET NO.
1084	20-00102-00-PV	CARROLL	217	62

CONTRACT NO. 85761

ILLINOIS | FED. AID PROJECT

85761

INTERSECTION LAYOUT

PT	STA	OFFSET	ELEV
G	493+78.06	12.00' RT	733.80
H	42+52.04	14.54' LT	733.41
I	41+91.97	10.00' LT	734.18
J	42+45.22	10.00' RT	734.18
K	494+75.41	17.50' RT	733.76
L	495+41.49	12.00' RT	733.45

INTERSECTION LAYOUT

PT	STA	OFFSET	ELEV
A	493+31.01	12.00' LT	733.64
B	493+97.44	17.56' LT	733.83
C	50+54.75	12.00' LT	733.48
D	51+08.03	12.00' RT	734.38
E	50+48.86	16.42' RT	734.15
F	494+94.60	12.00' LT	733.93

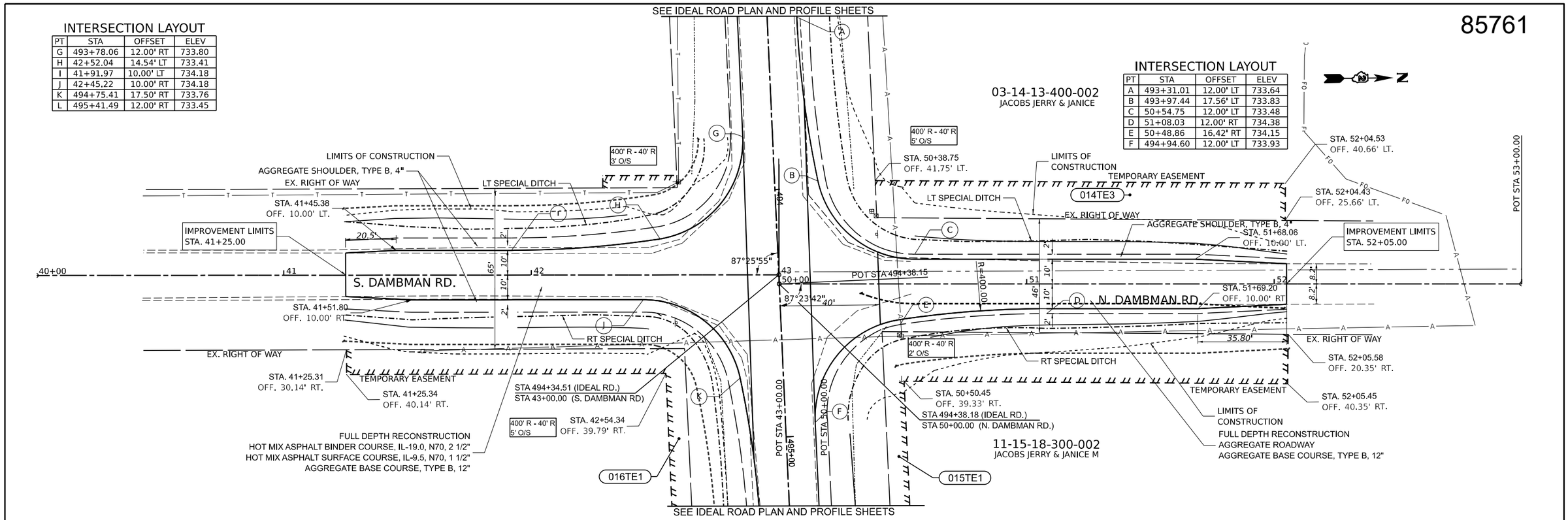

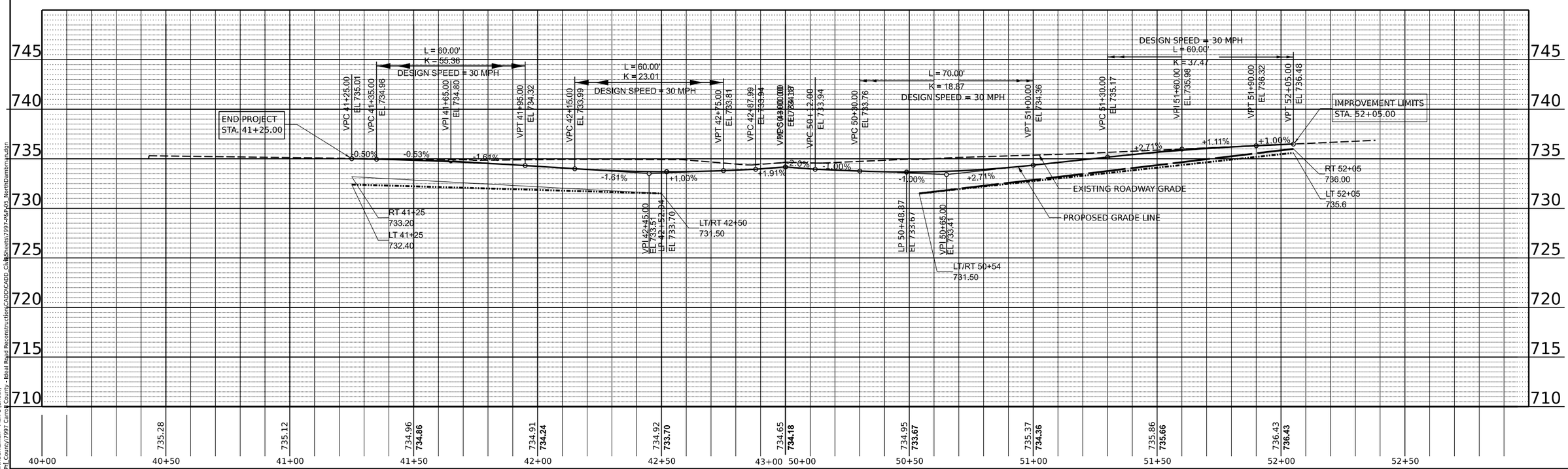

MODEL: PrCLNorthDambman - Plan 1 [Sheet]
FILE NAME: R:\PrJ County\7997 Carroll County - Ideal Road Reconstruction\CADD\CADD_Civil\Sheets\7997-PrJ-05_NorthDambman.dgn

CHASTAIN & ASSOCIATES LLC
CONSULTING ENGINEERS

USER NAME = dwozniarski	DESIGNED -	REVISED -	
	DRAWN -	REVISED -	
PLOT SCALE = 0.16666633 ' / in.	CHECKED -	REVISED -	
PLOT DATE = 6/14/2024	DATE - 04/17/2024	REVISED -	

STATE OF ILLINOIS
DEPARTMENT OF TRANSPORTATION

IDEAL ROAD RECONSTRUCTION
PLAN AND PROFILE – N. & S. DAMBMAN ROAD

SCALE: SCALE | SHEET 1 OF 1 SHEETS | STA. | TO STA.

F.A.S. RTE.	SECTION	COUNTY	TOTAL SHEETS	SHEET NO.
1084	20-00102-00-PV	CARROLL	217	63

CONTRACT NO. 85761

ILLINOIS | FED. AID PROJECT

85761

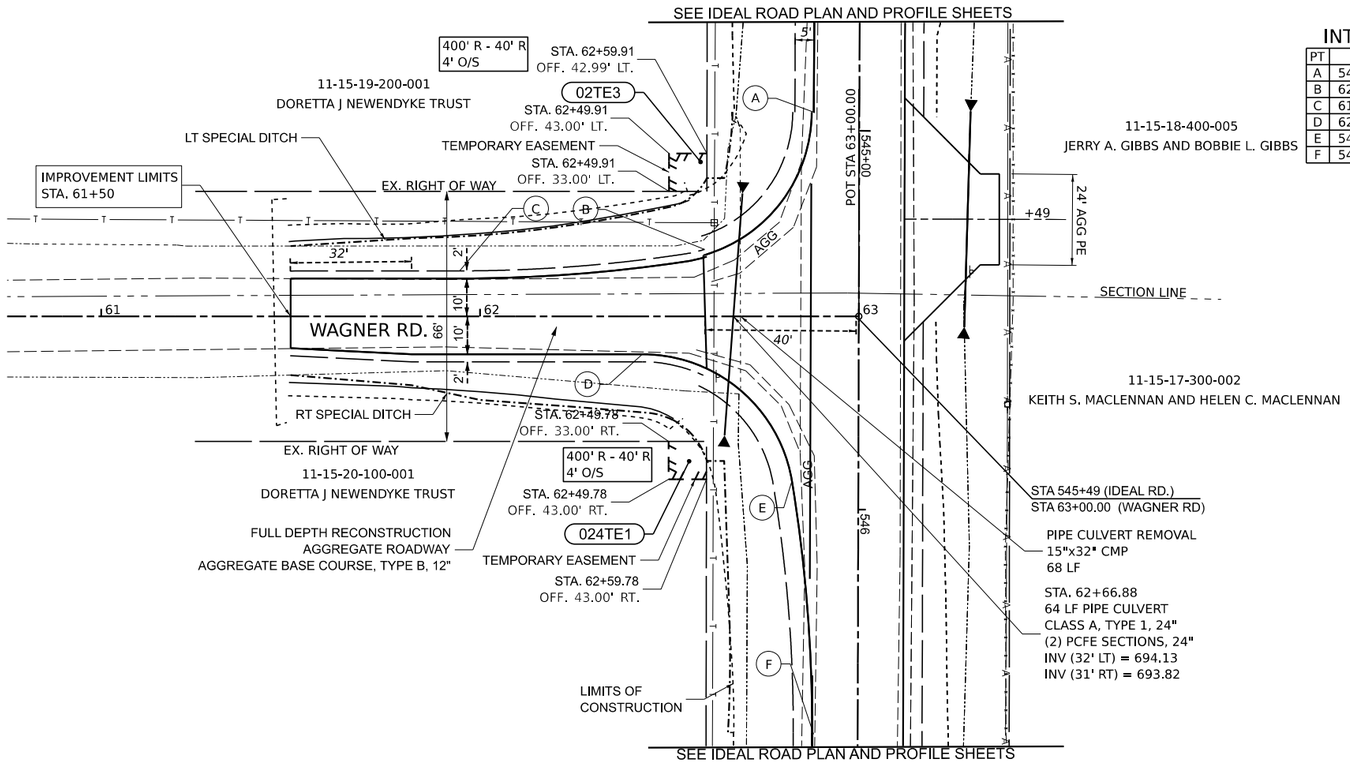

INTERSECTION LAYOUT

PT	STA	OFFSET	ELEV
A	544+96.63	12.05' RT	698.10
B	62+59.28	17.67' LT	696.55
C	61+94.63	10.00' LT	698.41
D	62+42.86	10.00' RT	698.50
E	545+92.51	17.56' RT	698.28
F	546+58.94	12.00' RT	699.59

0 20 40 60
SCALE IN FEET

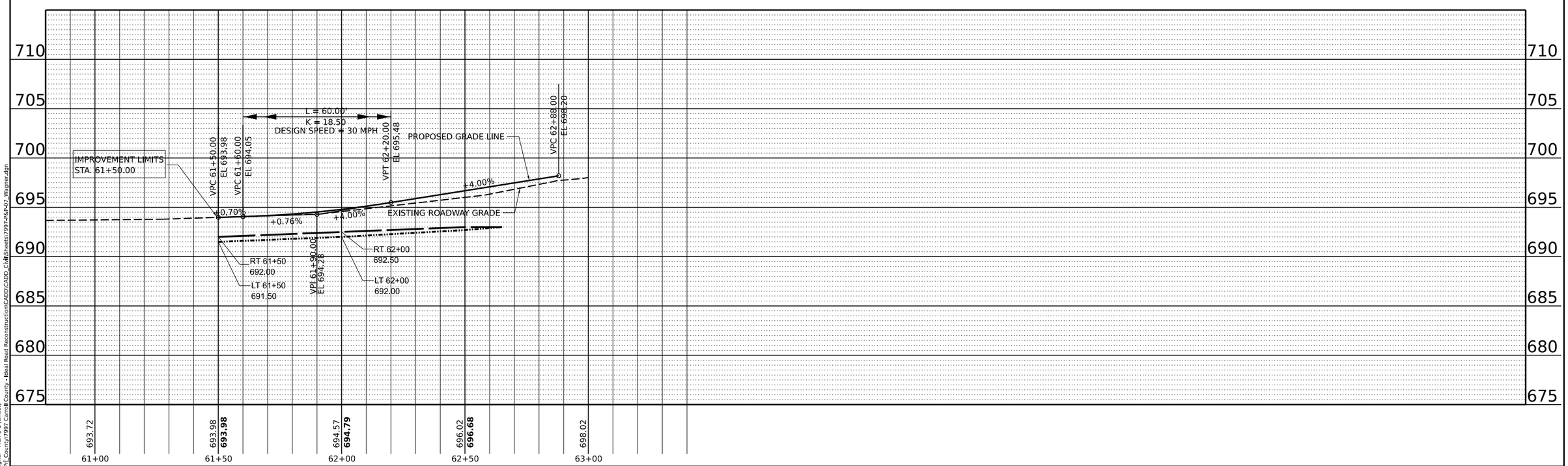

MODEL: PrCLWagner - Plan 1-1 [Sheet]
FILE NAME: R:\PrJ County\7997 Carroll County - Ideal Road Reconstruction\CADD\CADD_Civil\Sheets\7997-PlsP-07_Wagner.dgn

CHASTAIN & ASSOCIATES LLC
CONSULTING ENGINEERS

USER NAME = dwozniarski	DESIGNED -	REVISED -	
	DRAWN -	REVISED -	
PLOT SCALE = 0.16666633 ' / in.	CHECKED -	REVISED -	
PLOT DATE = 6/14/2024	DATE - 04/17/2024	REVISED -	

STATE OF ILLINOIS
DEPARTMENT OF TRANSPORTATION

IDEAL ROAD RECONSTRUCTION
PLAN AND PROFILE – WAGNER ROAD

SCALE: SCALE | SHEET 1 OF 1 SHEETS | STA. TO STA.

F.A.S. RTE.	SECTION	COUNTY	TOTAL SHEETS	SHEET NO.
1084	20-00102-00-PV	CARROLL	217	64

CONTRACT NO. 85761

ILLINOIS | FED. AID PROJECT

PT	STA		ELEV
A	594+71.53	12.00' RT	740.57
B	70+33.90	31.45' RT	739.91
C	71+40.88	12.00' RT	735.05
D	72+46.03	12.84' RT	730.00
E	72+47.43	12.57' LT	729.57
F	71+15.23	12.00' LT	739.30
G	70+81.28	12.00' LT	738.39
H	595+93.99	25.87' RT	739.18
I	597+05.56	12.00' RT	738.52

PR CURVE PRCLDUTCHTOWN
PI STA = 72+48.85
Δ = 43°04'17" (LT)
D = 16°36'27"
R = 345.00'
T = 136.15'
L = 259.35'
E = 25.89'
e = 3.8%
TR = 2.5'
SE RUN = 64'
PC STA = 71+12.70
PT STA = 73+72.05

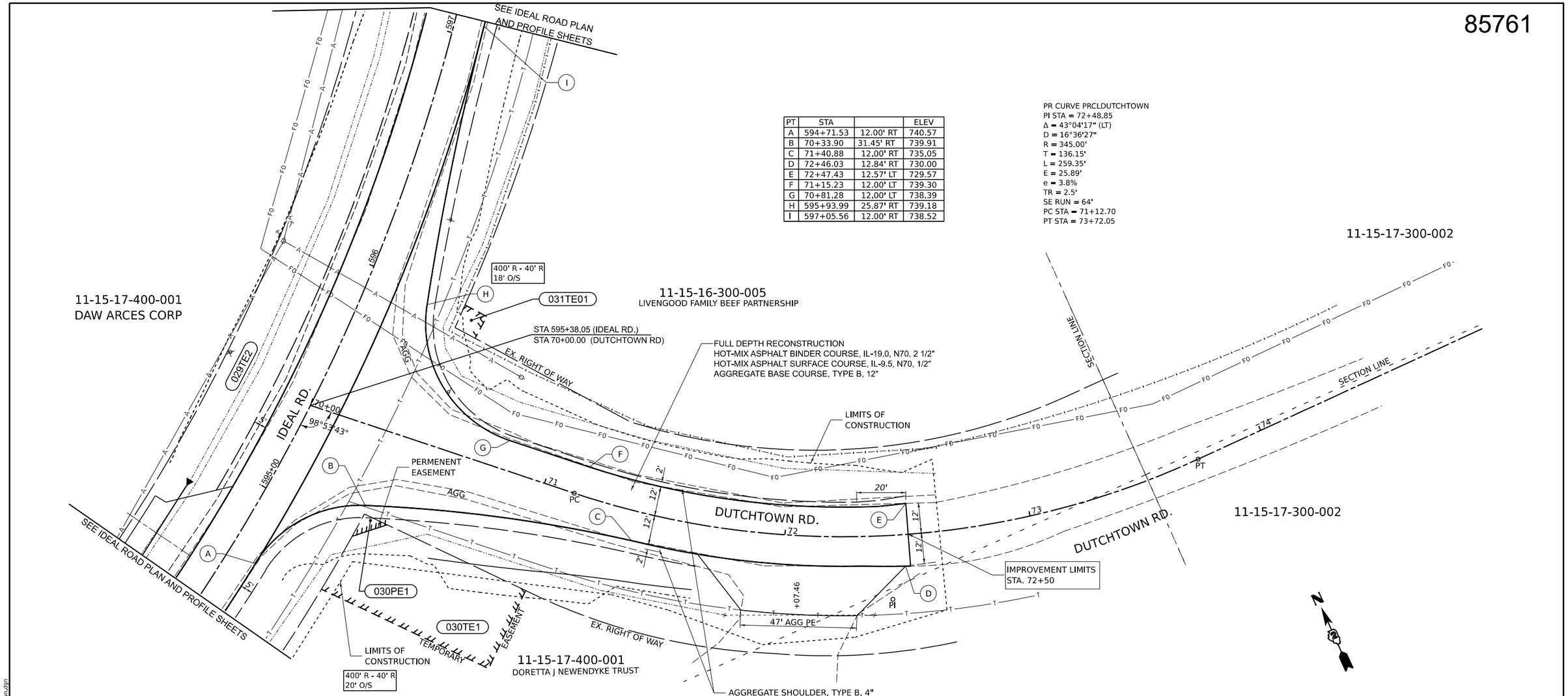

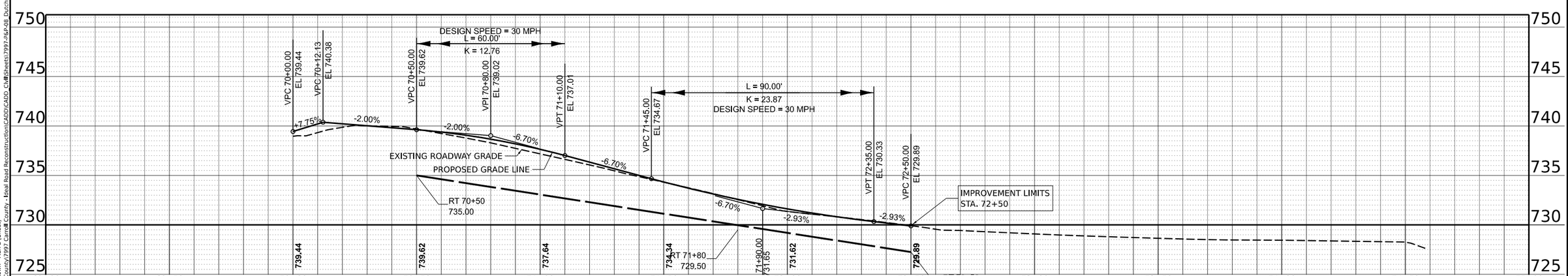

MODEL: PrCLDutchtown - Plan 2 [Sheet]
FILE NAME: S:\PK County\1997 Carroll County - Ideal Road Reconstruction\CADD\CADD Civil\Sheets\1997-P&P-08_Dutchtown.dgn

CHASTAIN & ASSOCIATES LLC
CONSULTING ENGINEERS

USER NAME = dwozniarski	DESIGNED -	REVISED -	
	DRAWN -	REVISED -	
PLOT SCALE = 0.16666633 ' / in.	CHECKED -	REVISED -	
PLOT DATE = 6/14/2024	DATE - 04/17/2024	REVISED -	

STATE OF ILLINOIS
DEPARTMENT OF TRANSPORTATION

IDEAL ROAD RECONSTRUCTION
PLAN AND PROFILE – DUTCHTOWN ROAD

SCALE: 1"=20' | SHEET 1 OF 1 SHEETS | STA. TO STA.

F.A.S. RTE.	SECTION	COUNTY	TOTAL SHEETS	SHEET NO.
1084	20-00102-00-PV	CARROLL	217	65

CONTRACT NO. 85761
ILLINOIS | FED. AID PROJECT

85761

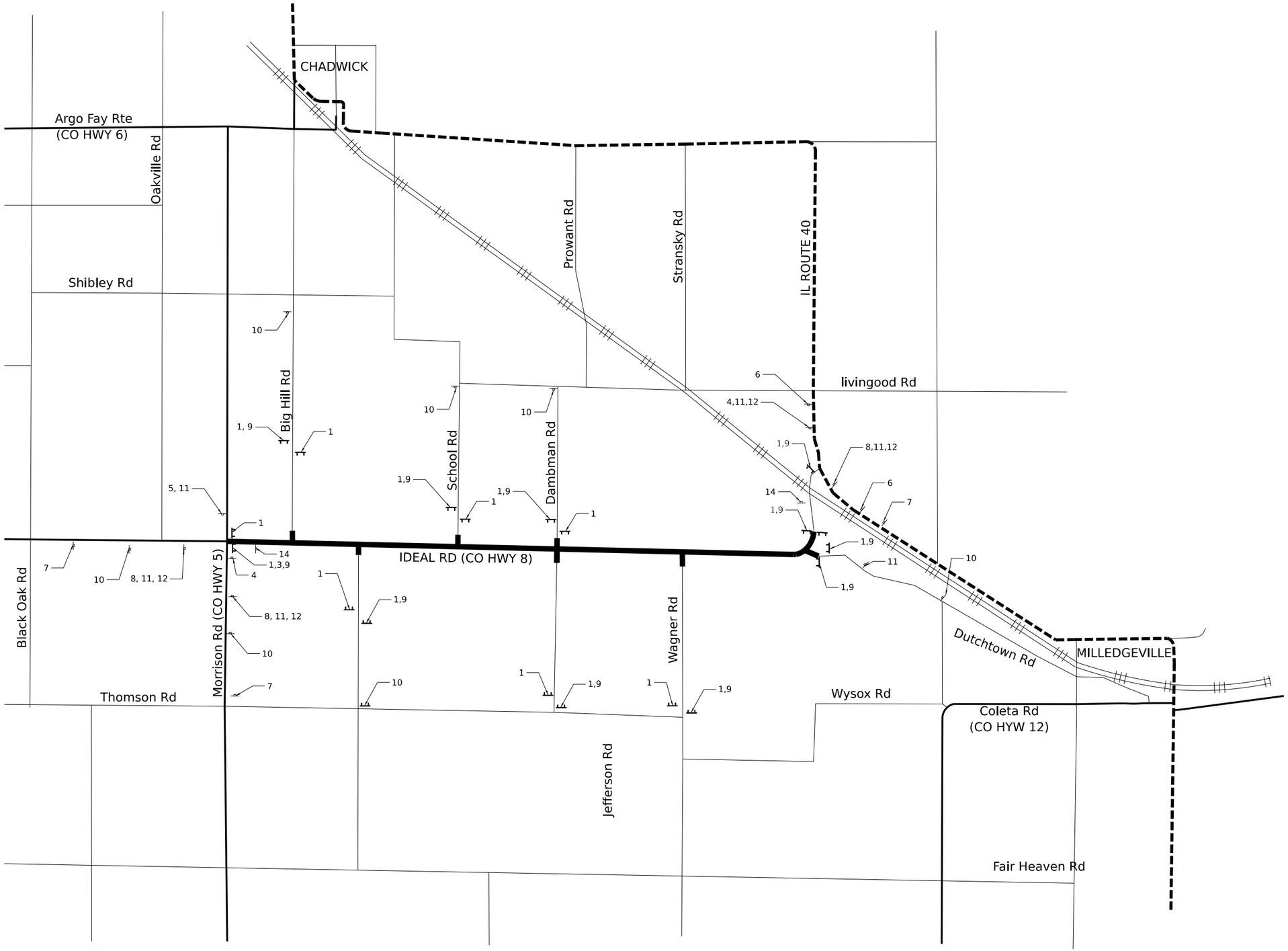

LEGEND

No	Description	MUTCD No.
1	Type III Barricades	NA
2	Road Closed	R11-2
3	Detour Arrow	M4-10
4	No Right Turn	R3-1
5	No Left Turn	R3-2
6	Road Construction Ahead	W20-I103
7	Detour Ahead	W20-2
8	Detour w/arrow	M4-9
9	Road close to Thru Traffic	R11-4
10	Road Close Ahead	W20-3
11	Road Closed 500FT	W20-3
12	Ideal Rd Plaque	NA
13	End Detour	M4-8a
14	Message Board	NA
15	Right Arrow	W1-6
16	Left Arrow	W1-6

Notes:

The contractor shall furnish, install, and maintain all temporary traffic control devices as required by the latest editions of the Manual for Uniform Traffic Control Devices <MUTCD>, Illinois Supplement to the MUTCD, Illinois Department of Transportation Standard Specifications and Details, Special Provisions, and as directed by the Engineer.

The contractor shall have all temporary traffic control devices installed prior to road closures.

Changeable Message Signs shall be installed 7 calendar days (min) prior to road closures.

Flaggers, signs, and other devices shall be required when construction activities encroach on adjacent Street right-of-way or as directed by the Engineer. See Traffic Control and Protection Special Provisions and applicable standards for further information and requirements.

The contractor shall make the required notification as outlined in the Special Provisions for Traffic Control and Protection as minimum 48 hours prior to closing roadways.

The contractor shall be responsible for all utility locates that may be required for the installation of any temporary traffic control devices.

All Construction Traffic Shall utilize established Truck Routes. No construction traffic shall be routed on residential street.

Special attention is called to article 107.09 and 107.14 of the Illinois Department of transportation Standard Specifications for Road and Bridge Construction, latest edition and Standard 701901 and BLR 21-9, The presence of temporary traffic control shown on this drawing or standards in the project plans or specification, whether a pay item or not, does not relieve the Contractor of their obligation to provide protection to the public in Accordance to Article 107.14 of the Standard Specifications. This Article stipulates that the Contractor shall provide to the Satisfaction of the Engineer, All protection deemed necessary beyond that shown in the plans or specifications.

The Contractor shall contact the Engineer prior to installation of any temporary traffic control device.

The Contractor shall promptly remove or cover all temporary traffic control devices immediately after Ideal Road is open to traffic. All temporary traffic control devices shall be removed from the project within 3 Calendar days of the completion of the project.

All labor, materials, and equipment required to furnish, install, maintain, and remove temporary traffic control devices to the satisfaction of the Engineer shall be paid for at the contract unit price Lump Sum for TRAFFIC CONTROL AND PROTECTION, SPECIAL.

MODEL: SHT_PLAN3
FILE NAME: R:\Prj_County\2997 Carroll County - Ideal Road Reconstruction\CADD\CADD_Civil\Sheets\7997-SH_TCP.dgn

CHASTAIN & ASSOCIATES LLC
CONSULTING ENGINEERS

USER NAME = dwozniarski	DESIGNED -	REVISED -	
	DRAWN -	REVISED -	
PLOT SCALE = 0.16666633 ' / in.	CHECKED -	REVISED -	
PLOT DATE = 6/14/2024	DATE - 04/17/2024	REVISED -	

STATE OF ILLINOIS
DEPARTMENT OF TRANSPORTATION

IDEAL ROAD RECONSTRUCTION
TRAFFIC CONTROL PLAN

SCALE: | SHEET 1 OF 1 SHEETS | STA. | TO STA.

F.A.S. RTE.	SECTION	COUNTY	TOTAL SHEETS	SHEET NO.
1084	20-00102-00-PV	CARROLL	217	66

CONTRACT NO. 85761

ILLINOIS | FED. AID PROJECT

85761

03-14-15-400-001

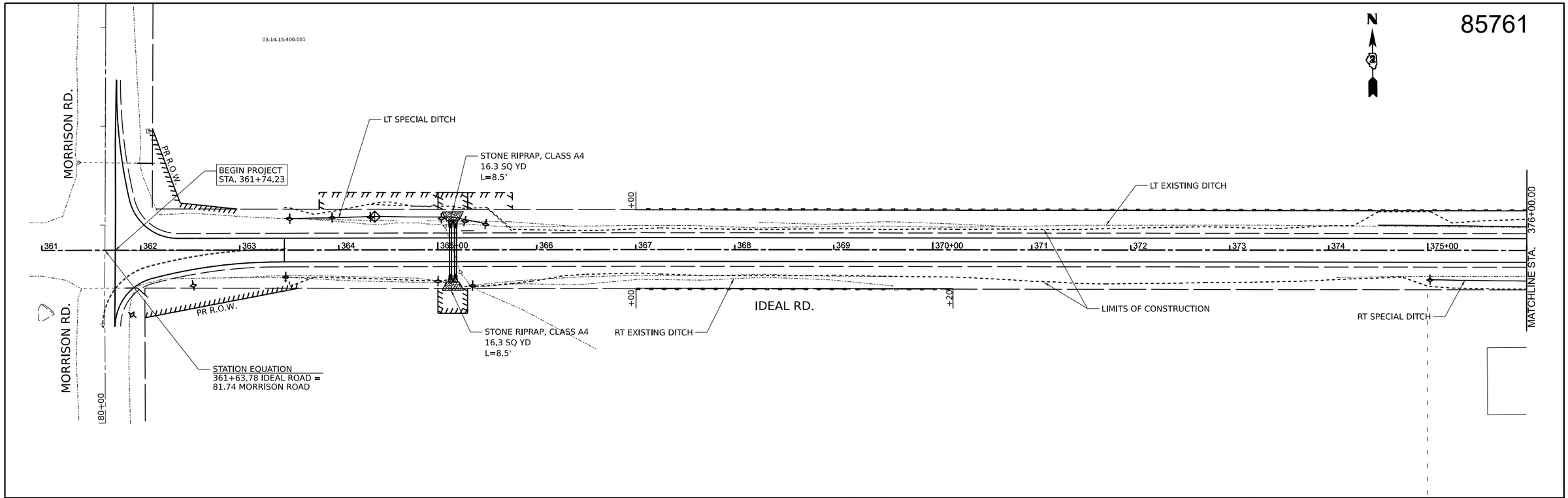

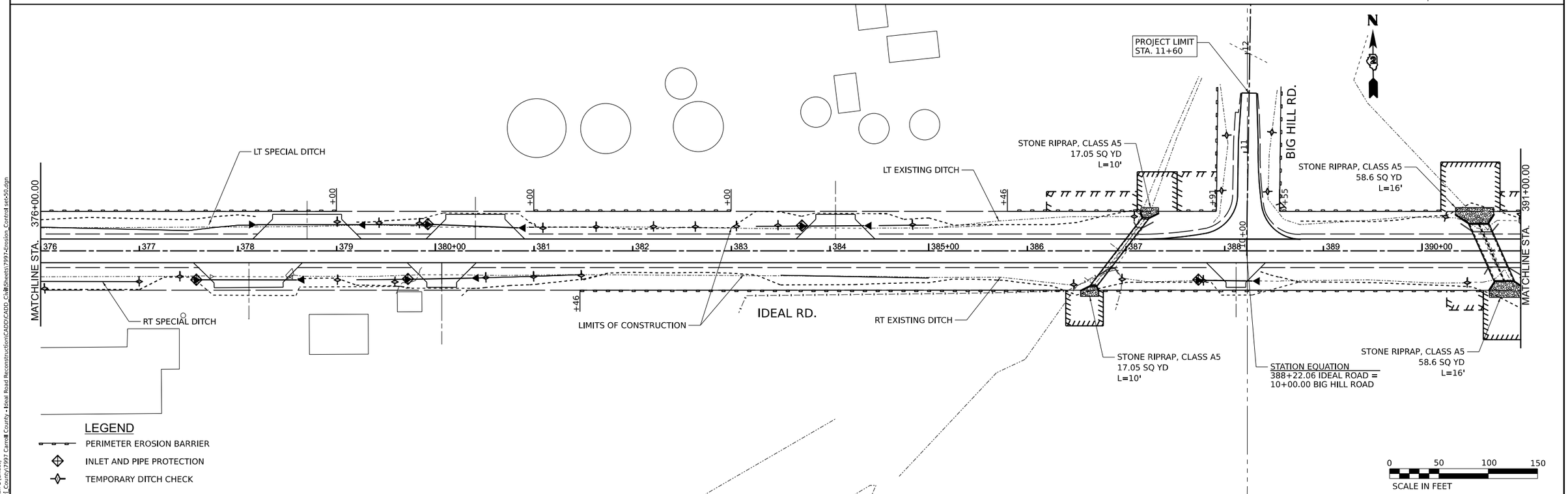

LEGEND

- PERIMETER EROSION BARRIER
- INLET AND PIPE PROTECTION
- TEMPORARY DITCH CHECK

MODEL: PrCL - Plan 1 [Sheet]
FILE NAME: R:\Pl_County\7997 Carroll County - Ideal Road Reconstruction\CADD\CADD_Civil\Sheets\7997-Erosion_Control sec50.dgn

USER NAME = dwozniarski	DESIGNED -	REVISED -	
	DRAWN -	REVISED -	
PLOT SCALE = 0.16666633 ' / in.	CHECKED -	REVISED -	
PLOT DATE = 6/14/2024	DATE -	REVISED -	

STATE OF ILLINOIS
DEPARTMENT OF TRANSPORTATION

IDEAL ROAD RECONSTRUCTION
EROSION CONTROL PLAN

SCALE: | SHEET 1 OF 8 SHEETS | STA. 361+00 TO STA. 391+00

F.A.S. RTE.	SECTION	COUNTY	TOTAL SHEETS	SHEET NO.
1084	20-00102-00-PV	CARROLL	217	67

CONTRACT NO. 85761

ILLINOIS | FED. AID PROJECT

85761

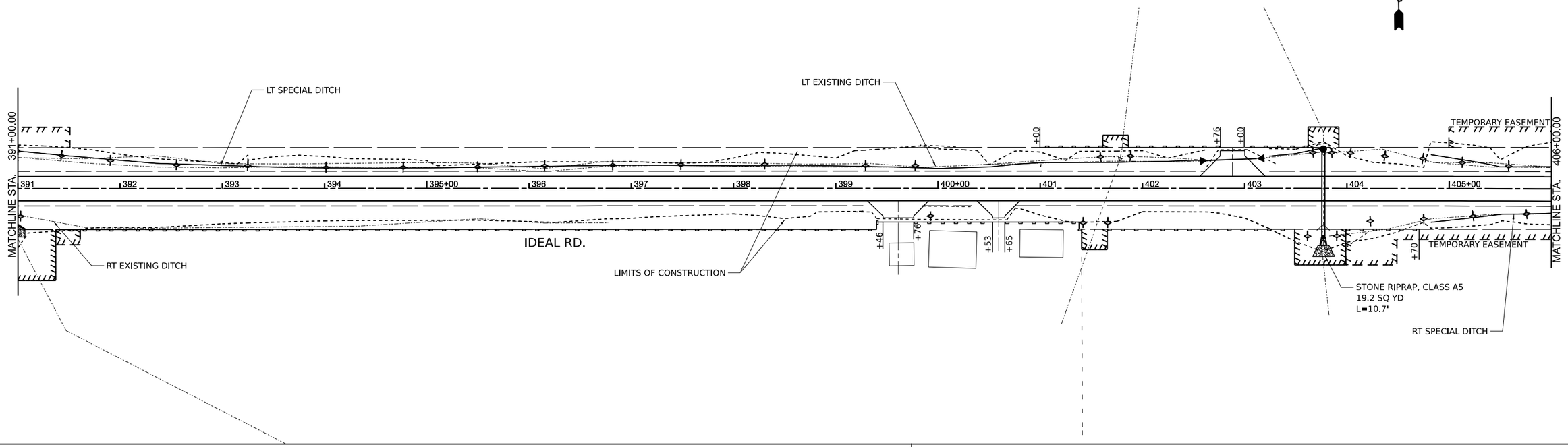

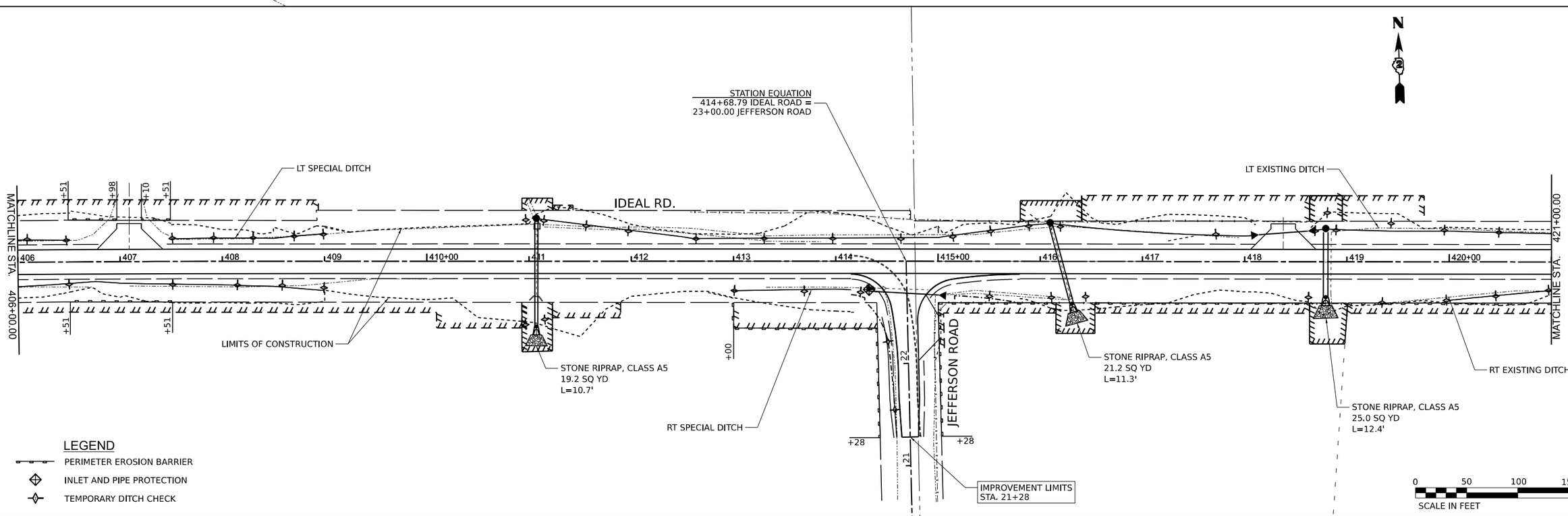

LEGEND

- PERIMETER EROSION BARRIER
- INLET AND PIPE PROTECTION
- TEMPORARY DITCH CHECK

USER NAME = dwozniarski	DESIGNED -	REVISED -	
	DRAWN -	REVISED -	
PLOT SCALE = 0.16666633 ' / in.	CHECKED -	REVISED -	
PLOT DATE = 6/14/2024	DATE -	REVISED -	

STATE OF ILLINOIS
DEPARTMENT OF TRANSPORTATION

IDEAL ROAD RECONSTRUCTION
EROSION CONTROL PLAN

SCALE: | SHEET 2 OF 8 SHEETS | STA. 391+00 TO STA. 421+00

F.A.S. RTE.	SECTION	COUNTY	TOTAL SHEETS	SHEET NO.
1084	20-00102-00-PV	CARROLL	217	68

CONTRACT NO. 85761

ILLINOIS | FED. AID PROJECT

MODEL: PrCL - Plan 2 [Sheet]
FILE NAME: R:\PI_County\7997 Carroll County - Ideal Road Reconstruction\CADD\CADD_Civil\Sheets\7997-Erosion_Control set-50.dgn

85761

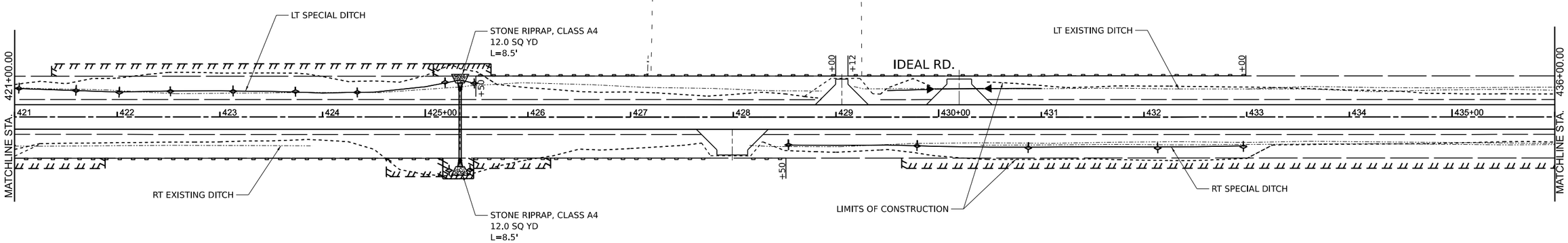

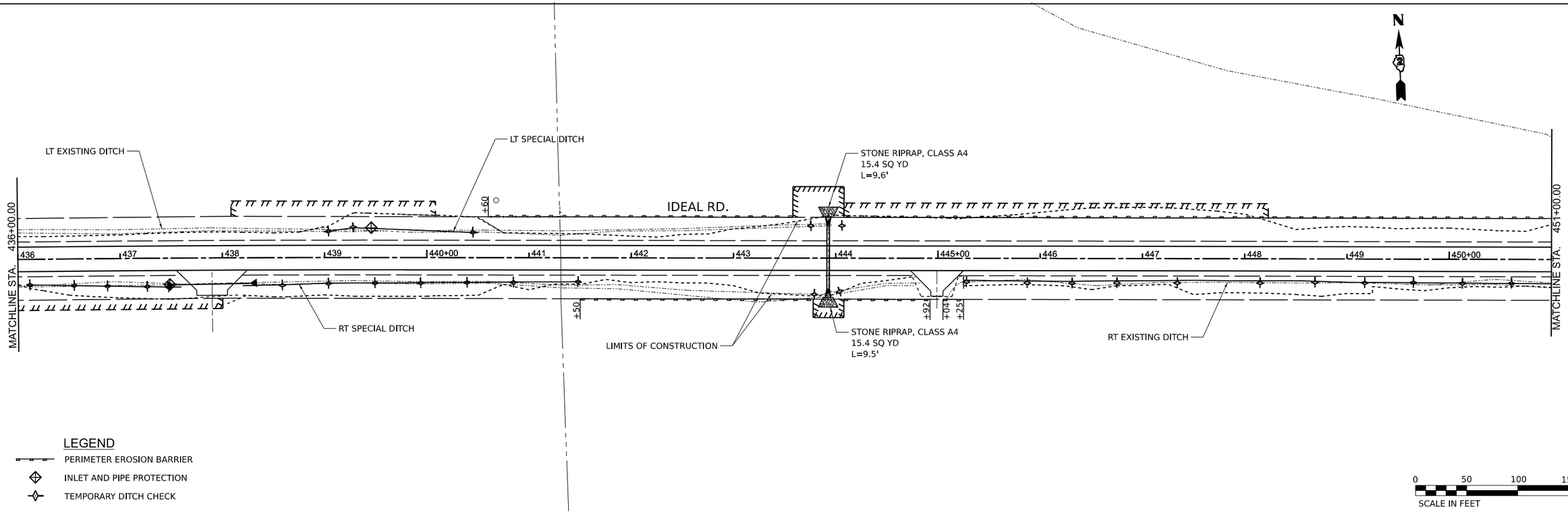

LEGEND

- PERIMETER EROSION BARRIER
- INLET AND PIPE PROTECTION
- TEMPORARY DITCH CHECK

0 50 100 150
SCALE IN FEET

MODEL: PrCL - Plan 3 [Sheet]
FILE NAME: R:\PrJ County\7997 Carroll County - Ideal Road Reconstruction\CADD\CADD_Civil\Sheets\7997-Erosion_Control ses-50.dgn

USER NAME = dwozniarski	DESIGNED -	REVISED -	
	DRAWN -	REVISED -	
PLOT SCALE = 0.16666633 ' / in.	CHECKED -	REVISED -	
PLOT DATE = 6/14/2024	DATE -	REVISED -	

STATE OF ILLINOIS
DEPARTMENT OF TRANSPORTATION

IDEAL ROAD RECONSTRUCTION
EROSION CONTROL PLAN

SCALE: | SHEET 3 OF 8 SHEETS | STA. 421+00 TO STA. 451+00

F.A.S. RTE.	SECTION	COUNTY	TOTAL SHEETS	SHEET NO.
1084	20-00102-00-PV	CARROLL	217	69

CONTRACT NO. 85761

ILLINOIS | FED. AID PROJECT

85761

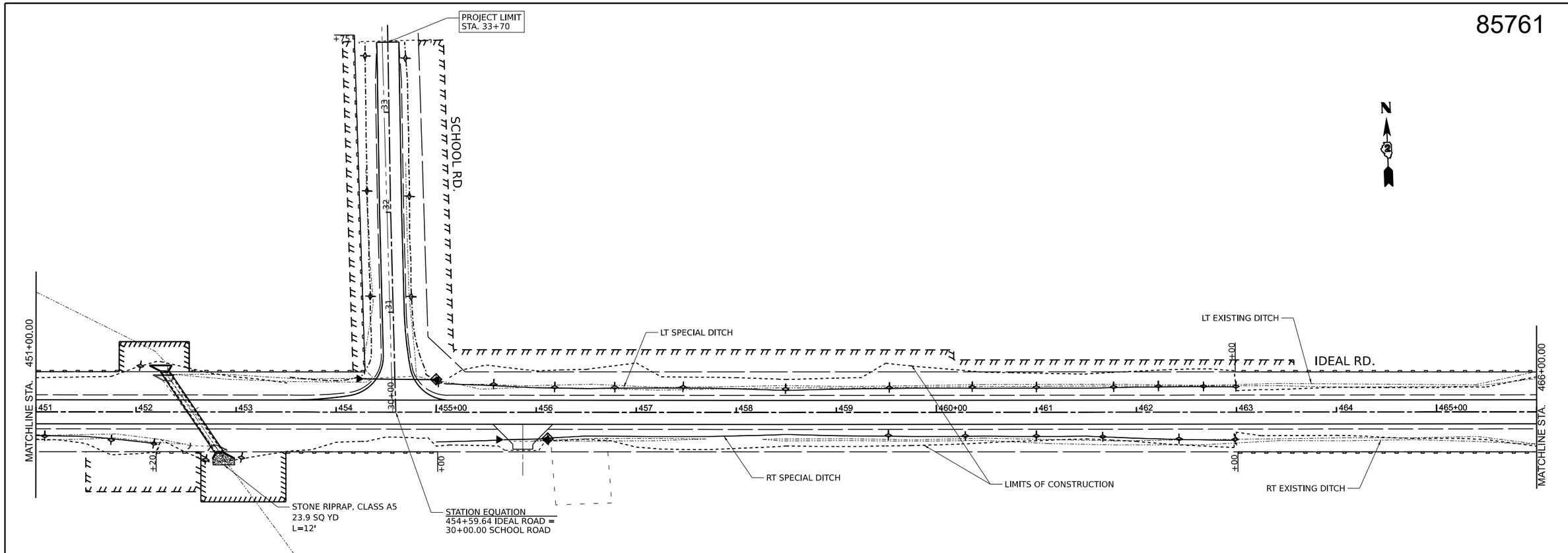

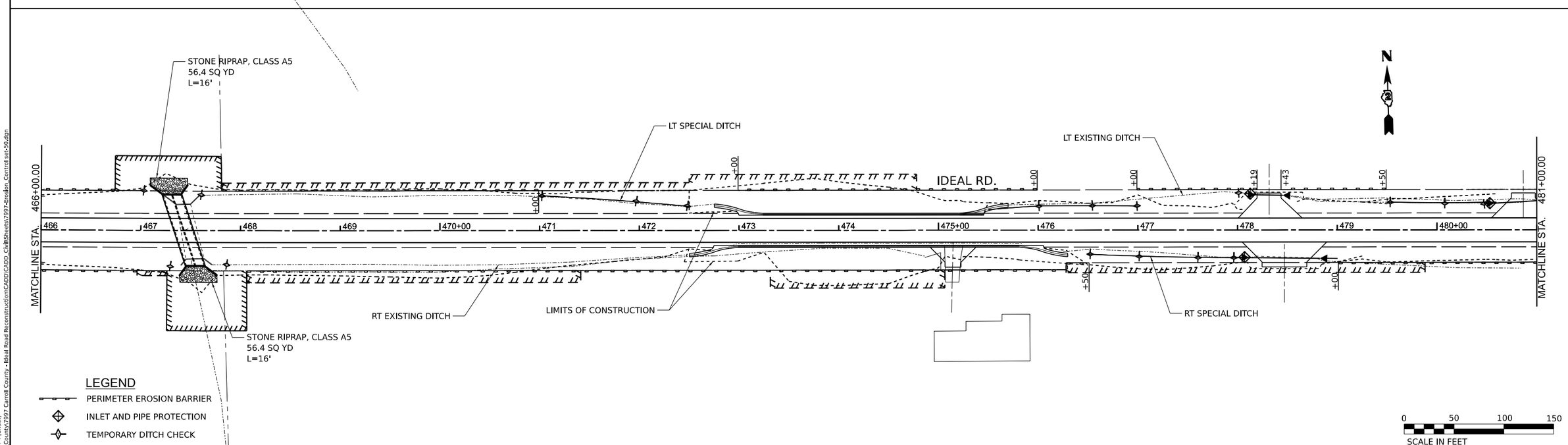

LEGEND

- PERIMETER EROSION BARRIER
- INLET AND PIPE PROTECTION
- TEMPORARY DITCH CHECK

MODEL: PrCL - Plan 4 [Sheet]
FILE NAME: R:\PrCL\County\7997 Carroll County - Ideal Road Reconstruction\CADD\CADD_Civil\Sheets\7997-Erosion_Control-set-50.dgn

CHASTAIN & ASSOCIATES LLC
CONSULTING ENGINEERS

USER NAME = dwozniarski	DESIGNED -	REVISED -	
	DRAWN -	REVISED -	
PLOT SCALE = 0.16666633 ' / in.	CHECKED -	REVISED -	
PLOT DATE = 6/14/2024	DATE - 04/17/2024	REVISED -	

STATE OF ILLINOIS
DEPARTMENT OF TRANSPORTATION

IDEAL ROAD RECONSTRUCTION
EROSION CONTROL PLAN

SCALE: | SHEET 4 OF 8 SHEETS | STA. 451+00 TO STA. 481+00

F.A.S. RTE.	SECTION	COUNTY	TOTAL SHEETS	SHEET NO.
1084	20-00102-00-PV	CARROLL	217	70

CONTRACT NO. 85761

ILLINOIS | FED. AID PROJECT

85761

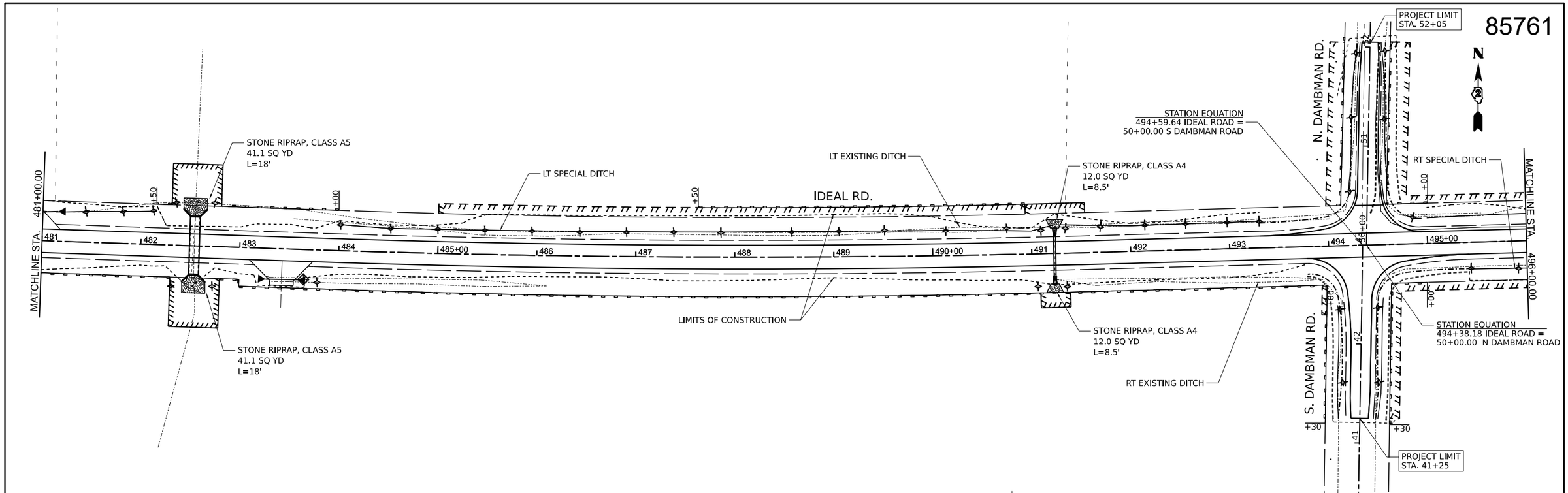

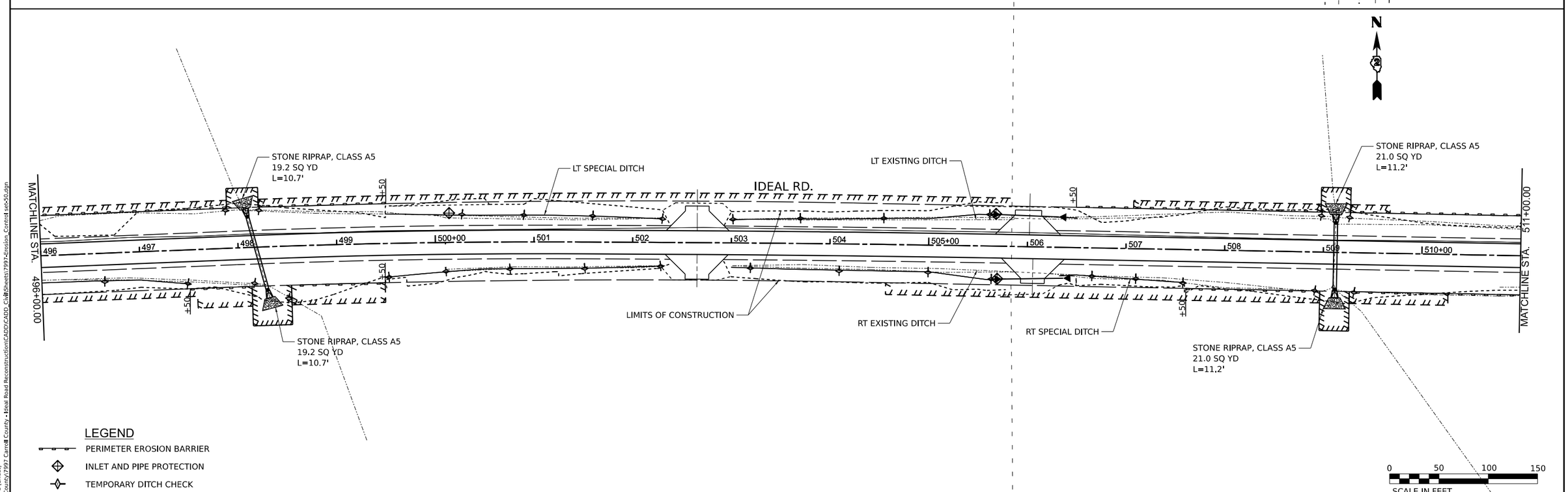

LEGEND

- PERIMETER EROSION BARRIER
- INLET AND PIPE PROTECTION
- TEMPORARY DITCH CHECK

MODEL: PrCL - Plan S [Sheet]
FILE NAME: R:\PrJ_County\7997 Carroll County - Ideal Road Reconstruction\CADD\CADD_Civil\Sheets\7997-Erosion_Control set-50.dgn

USER NAME = dwozniarski	DESIGNED -	REVISED -	
	DRAWN -	REVISED -	
PLOT SCALE = 0.16666633 ' / in.	CHECKED -	REVISED -	
PLOT DATE = 6/14/2024	DATE -	REVISED -	

STATE OF ILLINOIS
DEPARTMENT OF TRANSPORTATION

IDEAL ROAD RECONSTRUCTION
EROSION CONTROL PLAN

SCALE: | SHEET 5 OF 8 SHEETS | STA. 481+00 TO STA. 511+00

F.A.S. RTE.	SECTION	COUNTY	TOTAL SHEETS	SHEET NO.
1084	20-00102-00-PV	CARROLL	217	71

CONTRACT NO. 85761

ILLINOIS | FED. AID PROJECT

85761

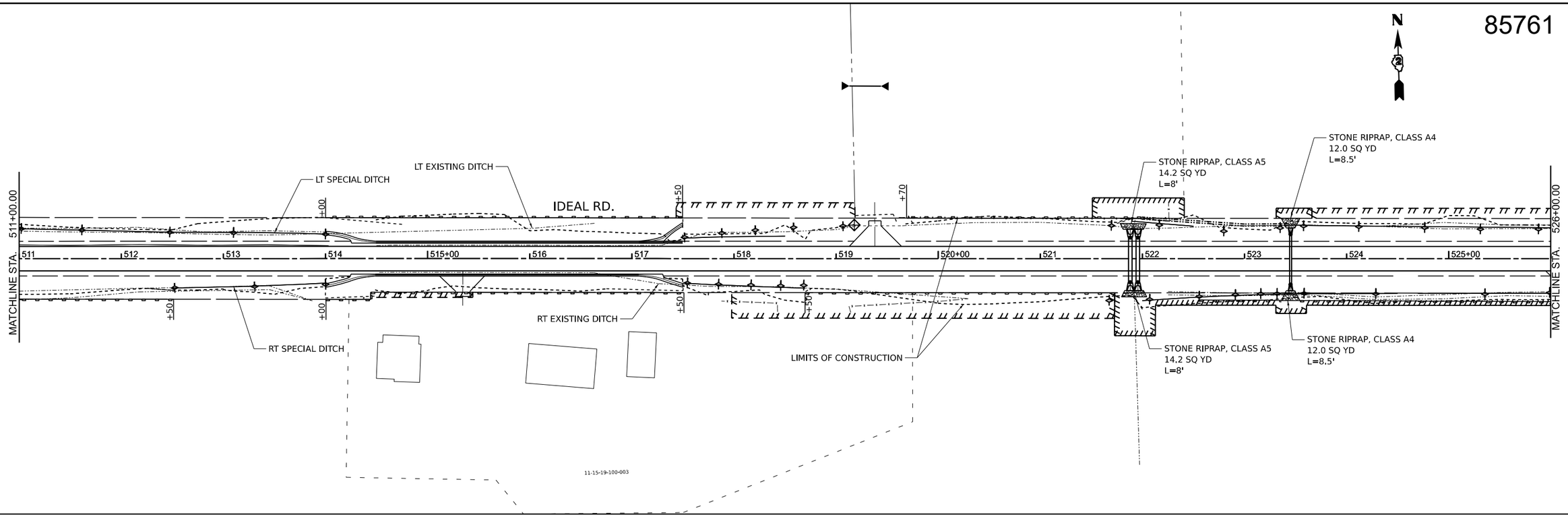

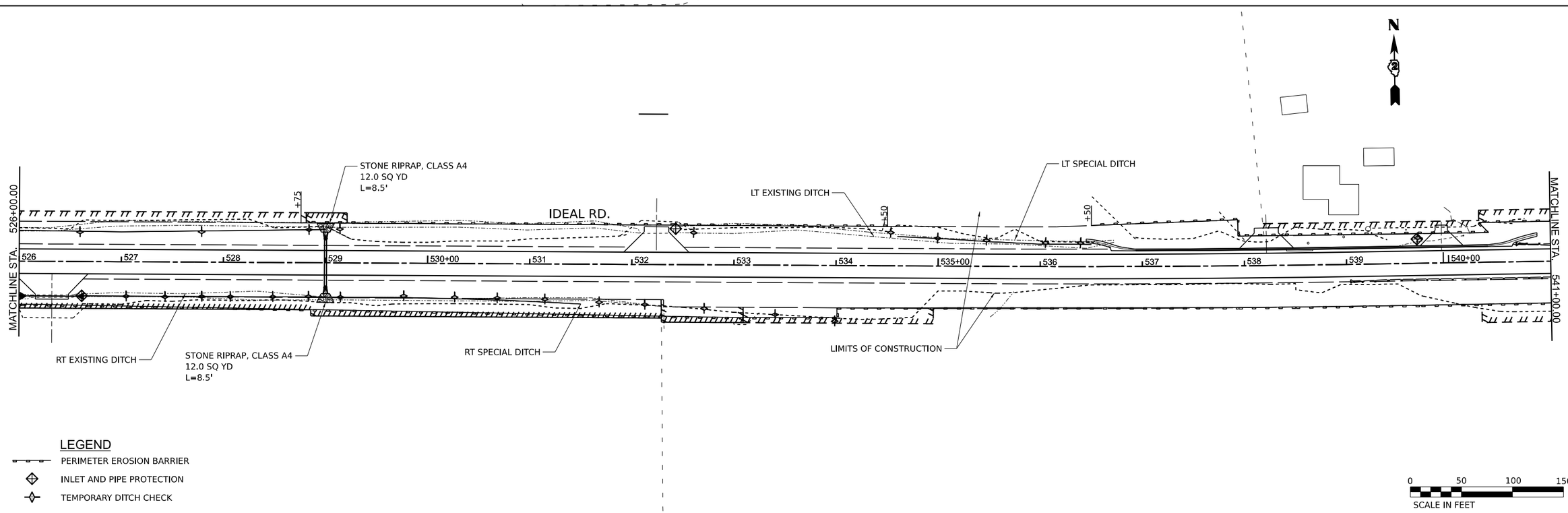

LEGEND

- PERIMETER EROSION BARRIER
- INLET AND PIPE PROTECTION
- TEMPORARY DITCH CHECK

0 50 100 150
SCALE IN FEET

MODEL: PrCL - Plan 6 [Sheet]
FILE NAME: R:\PrJ County\7997 Carroll County - Ideal Road Reconstruction\CADD\CADD_Civil\Sheets\7997-Erosion_Control sec-50.dgn

USER NAME = dwozniarski	DESIGNED -	REVISED -	
	DRAWN -	REVISED -	
PLOT SCALE = 0.16666633 ' / in.	CHECKED -	REVISED -	
PLOT DATE = 6/14/2024	DATE -	REVISED -	

STATE OF ILLINOIS
DEPARTMENT OF TRANSPORTATION

IDEAL ROAD RECONSTRUCTION
EROSION CONTROL PLAN

SCALE: | SHEET 6 OF 8 SHEETS | STA. 511+00 TO STA. 541+00

F.A.S. RTE.	SECTION	COUNTY	TOTAL SHEETS	SHEET NO.
1084	20-00102-00-PV	CARROLL	217	72

CONTRACT NO. 85761

ILLINOIS | FED. AID PROJECT

85761

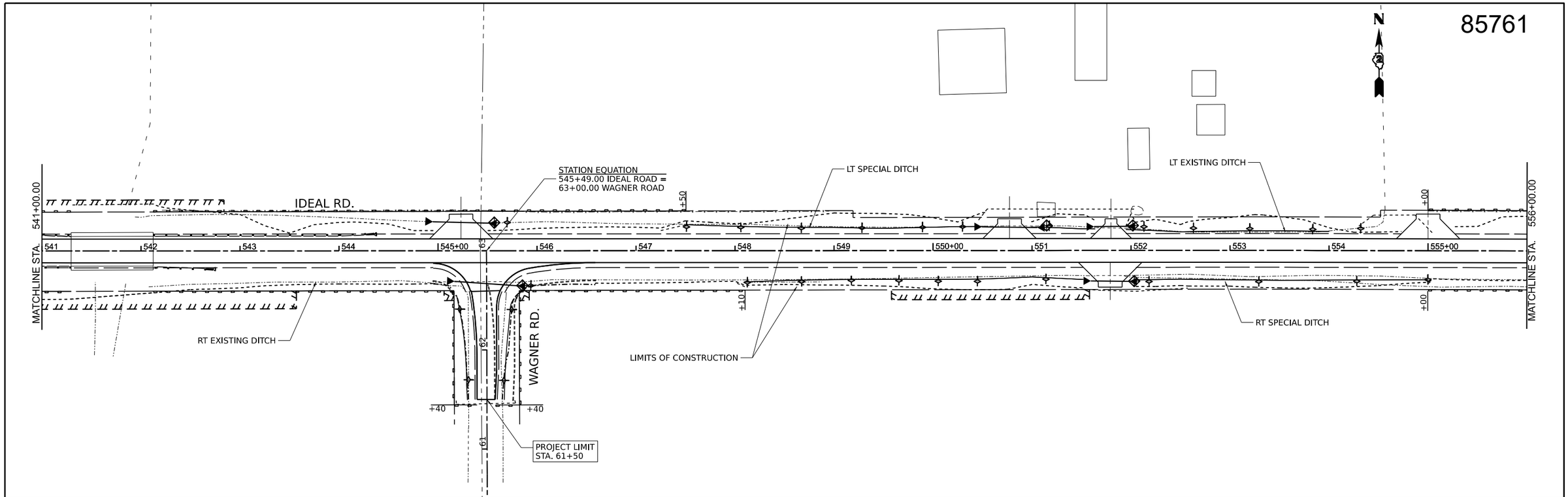

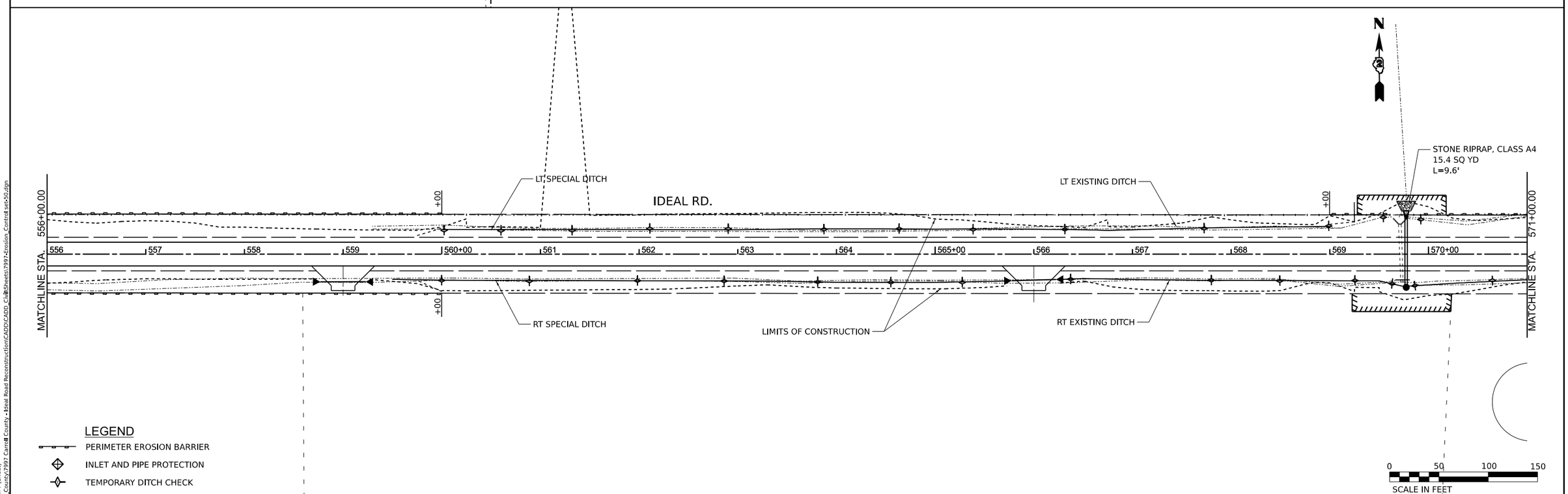

LEGEND

- PERIMETER EROSION BARRIER
- INLET AND PIPE PROTECTION
- TEMPORARY DITCH CHECK

MODEL: PrCL - Plan 7 [Sheet]
FILE NAME: R:\PJ-County\7997 Carroll County - Ideal Road Reconstruction\CADD\CADD_Civil\Sheets\7997-Erosion_Control set-50.dgn

USER NAME = dwozniarski	DESIGNED -	REVISED -	
	DRAWN -	REVISED -	
PLOT SCALE = 0.16666633 ' / in.	CHECKED -	REVISED -	
PLOT DATE = 6/14/2024	DATE -	REVISED -	

STATE OF ILLINOIS
DEPARTMENT OF TRANSPORTATION

IDEAL ROAD RECONSTRUCTION
EROSION CONTROL PLAN

SCALE: | SHEET 7 OF 8 SHEETS | STA. 541+00 TO STA. 571+00

F.A.S. RTE.	SECTION	COUNTY	TOTAL SHEETS	SHEET NO.
1084	20-00102-00-PV	CARROLL	217	73

CONTRACT NO. 85761

ILLINOIS | FED. AID PROJECT

85761

N

LT SPECIAL DITCH

IDEAL RD.

LT EXISTING DITCH

571+00.00

MATCHLINE STA.

+20

+00

+00

+00

585+50

MATCHLINE STA.

571 572 573 574 575+00 576 577 578 579 580+00 581 582 583 584 585+00

RT SPECIAL DITCH

LIMITS OF CONSTRUCTION

RT EXISTING DITCH

585+50

MATCHLINE STA.

STONE RIPRAP, CLASS A4
12.0 SQ YD
L=8.5'

586 587 588 589 590+00 591 592 593 594 595+00 596 597 598 599 600+00

STONE RIPRAP, CLASS A4
12.0 SQ YD
L=8.5'

END PROJECT
STA. 599+00

LT SPECIAL DITCH

STATION EQUATION
595+38.05 IDEAL ROAD =
70+00.00 DUTCHMAN ROAD

LT EXISTING DITCH

+00

IDEAL RD.

+00

+00

RT SPECIAL DITCH

+00

+10

DUTCHTOWN RD.

171

172

173

+50

+65

LIMITS OF CONSTRUCTION

RT EXISTING DITCH

11-15-16-300-005

PROJECT LIMIT
STA. 72+50

N

LEGEND

PERIMETER EROSION BARRIER

INLET AND PIPE PROTECTION

TEMPORARY DITCH CHECK

0 50 100 150

SCALE IN FEET

MODEL: PrCL - Plan 8 [Sheet]
FILE NAME: R:\PrJ County\7997 Carroll County - Ideal Road Reconstruction\CADD\CADD_Civil\Sheets\7997-Erosion_Control ses-50.dgn

USER NAME = dwozniarski	DESIGNED -	REVISED -	
	DRAWN -	REVISED -	
PLOT SCALE = 0.16666633 ' / in.	CHECKED -	REVISED -	
PLOT DATE = 6/14/2024	DATE -	REVISED -	

STATE OF ILLINOIS
DEPARTMENT OF TRANSPORTATION

IDEAL ROAD RECONSTRUCTION
EROSION CONTROL PLAN

SCALE: | SHEET 8 OF 8 SHEETS | STA. 571+00 TO STA. 600+00

F.A. RTE.	SECTION	COUNTY	TOTAL SHEETS	SHEET NO.
1084	20-00102-00-PV	CARROLL	217	74

CONTRACT NO. 85761

ILLINOIS | FED. AID PROJECT

85761

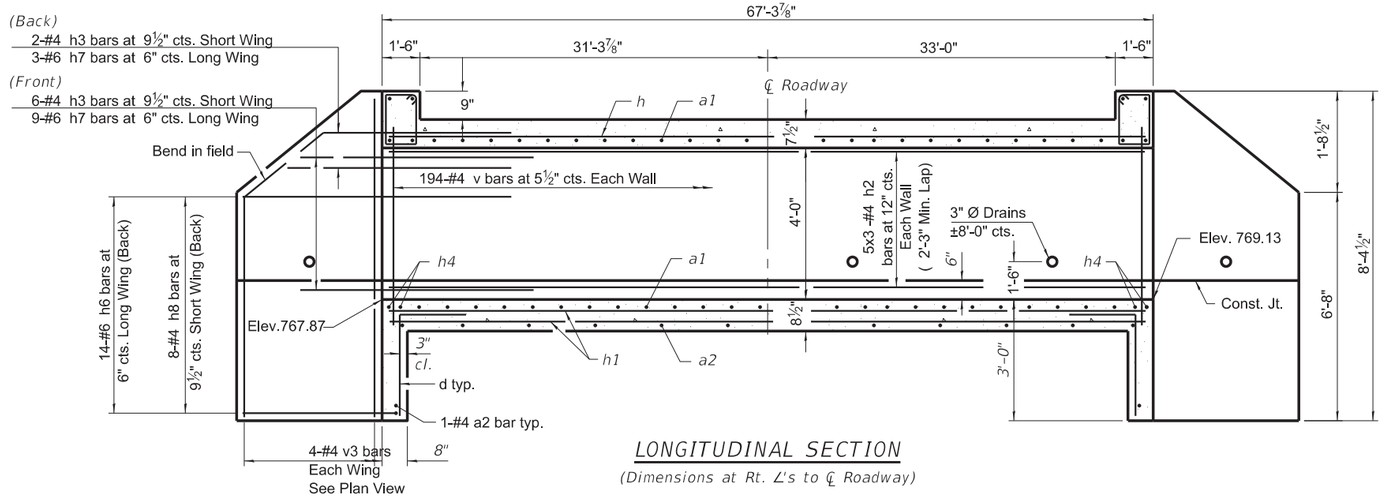

LONGITUDINAL SECTION

(Dimensions at Rt. ∠'s to ℄ Roadway)

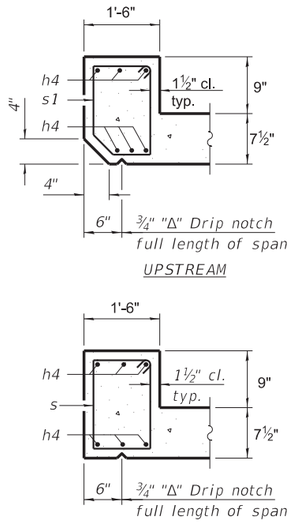

SECTION THRU HEADWALL

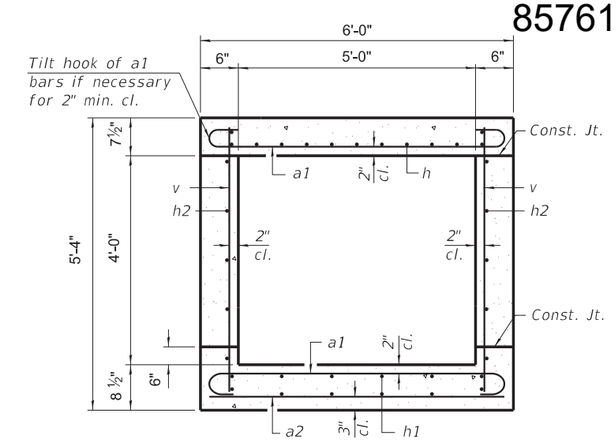

SECTION THRU BARREL

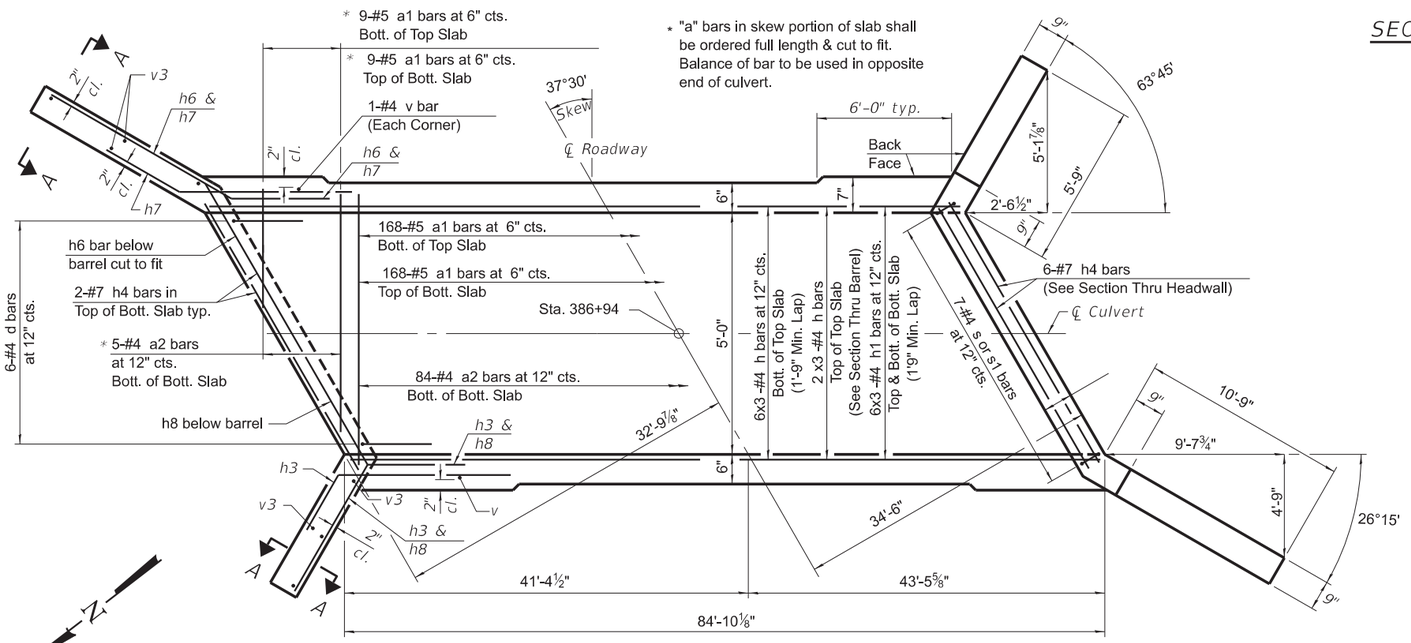

SHOWING TOEWALL

PLAN

SHOWING HEADWALL

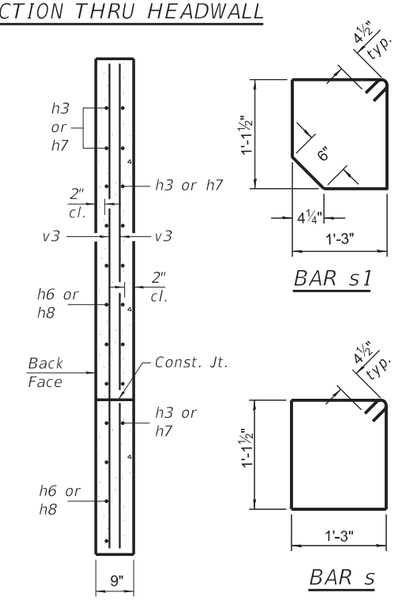

SECTION A-A

BAR s1

BAR s

BILL OF MATERIAL

Bar	No.	Size	Length	Shape
a1	354	#5	6'-10"	
a2	91	#4	5'-8"	
d	12	#4	4'-5"	
h	24	#4	31'-0"	
h1	36	#4	31'-0"	
h2	30	#4	31'-0"	
h3	16	#4	8'-0"	
h4	16	#7	6'-3"	
h6	28	#6	13'-6"	
h7	24	#6	8'-0"	
h8	16	#4	8'-6"	
s	7	#4	5'-6"	
s1	7	#4	5'-4"	
v	392	#4	4'-11"	
v3	16	#4	8'-0"	
Concrete Box Culverts		Cu. Yd.	47.8	
Reinforcement Bars		Pound	7,430	

Notes:

A distance of half the length of the wingwall but not less than six feet of the barrel shall be poured monolithically with the wingwalls.

Bars indicated thus 12 x 4-#5 etc. indicates 12 lines of bars with 4 lengths per line.

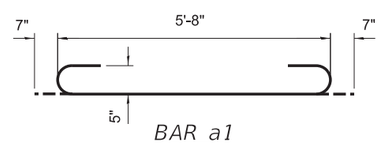

BAR a1

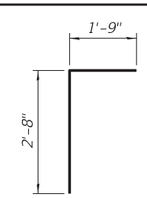

BAR d

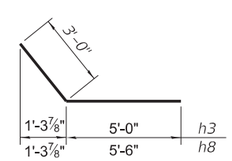

BARS h3 & h8

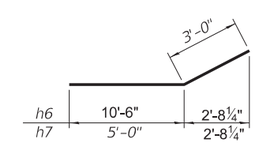

BARS h6 & h7

LICENSED STRUCTURAL ENGINEER
JEREMY M. BUENING 081-6696 MOUNT ZION
STATE OF ILLINOIS

Jeremy Buening 4/17/24

JEREMY M BUENING, P.E., S.E. Date

License Expires 11/30/24

I certify that to the best of my knowledge, information and belief, this bridge/box culvert design is structurally adequate for the design loading shown on the plans. The design is an economical one for the style of structure and complies with requirements of the current 'AASHTO Standard Specifications for Highway Bridges'.

TSB-SB-HC-LS 2-17-2017

CHASTAIN & ASSOCIATES LLC CONSULTING ENGINEERS

USER NAME = dwozniarski	DESIGNED -	REVISED -	
	DRAWN -	REVISED -	
PLOT SCALE = 0.16666633 ' / in.	CHECKED -	REVISED -	
PLOT DATE = 4/17/2024	DATE - 04/17/2024	REVISED -	

STATE OF ILLINOIS
DEPARTMENT OF TRANSPORTATION

IDEAL ROAD RECONSTRUCTION
CULVERT DETAILS – STRUCTURE NO. 386+94

SCALE: SHEET 1 OF 1 SHEETS STA. TO STA.

F.A.S. RTE.	SECTION	COUNTY	TOTAL SHEETS	SHEET NO.
1084	20-00102-00-PV	CARROLL	217	75
		CONTRACT NO. 85761		
		ILLINOIS FED. AID PROJECT		

MODEL: Structure No. 1 Detail
FILE NAME: R:\Pt County\7997 Carroll County - Ideal Road Reconstruction\CADD\CADD_Struct\Structure No. 1 386+94\7997-Culvert at station 386+94-Changes.dgn

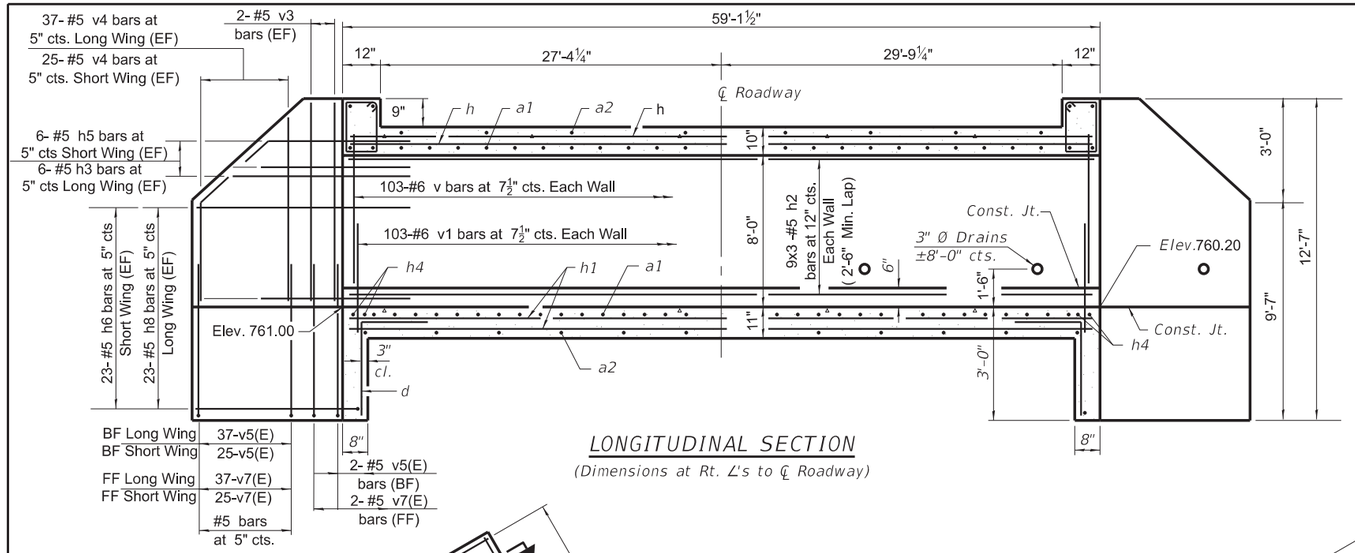

LONGITUDINAL SECTION

(Dimensions at Rt. ∠'s to ℄ Roadway)

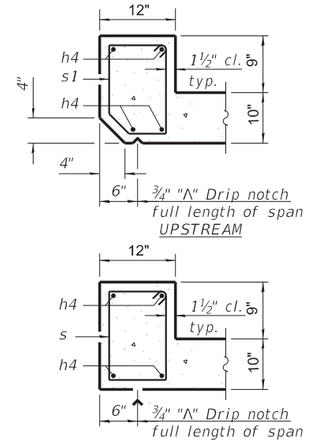

SECTION THRU HEADWALL

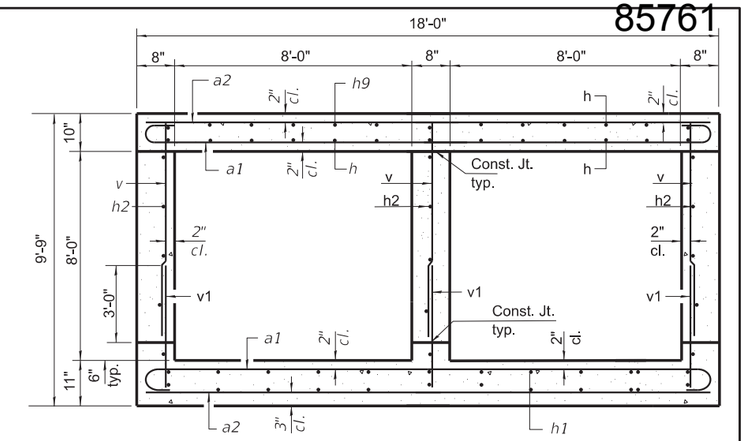

SECTION THRU BARREL

BF= BACK FACE
FF= FRONT FACE
EF= EACH FACE

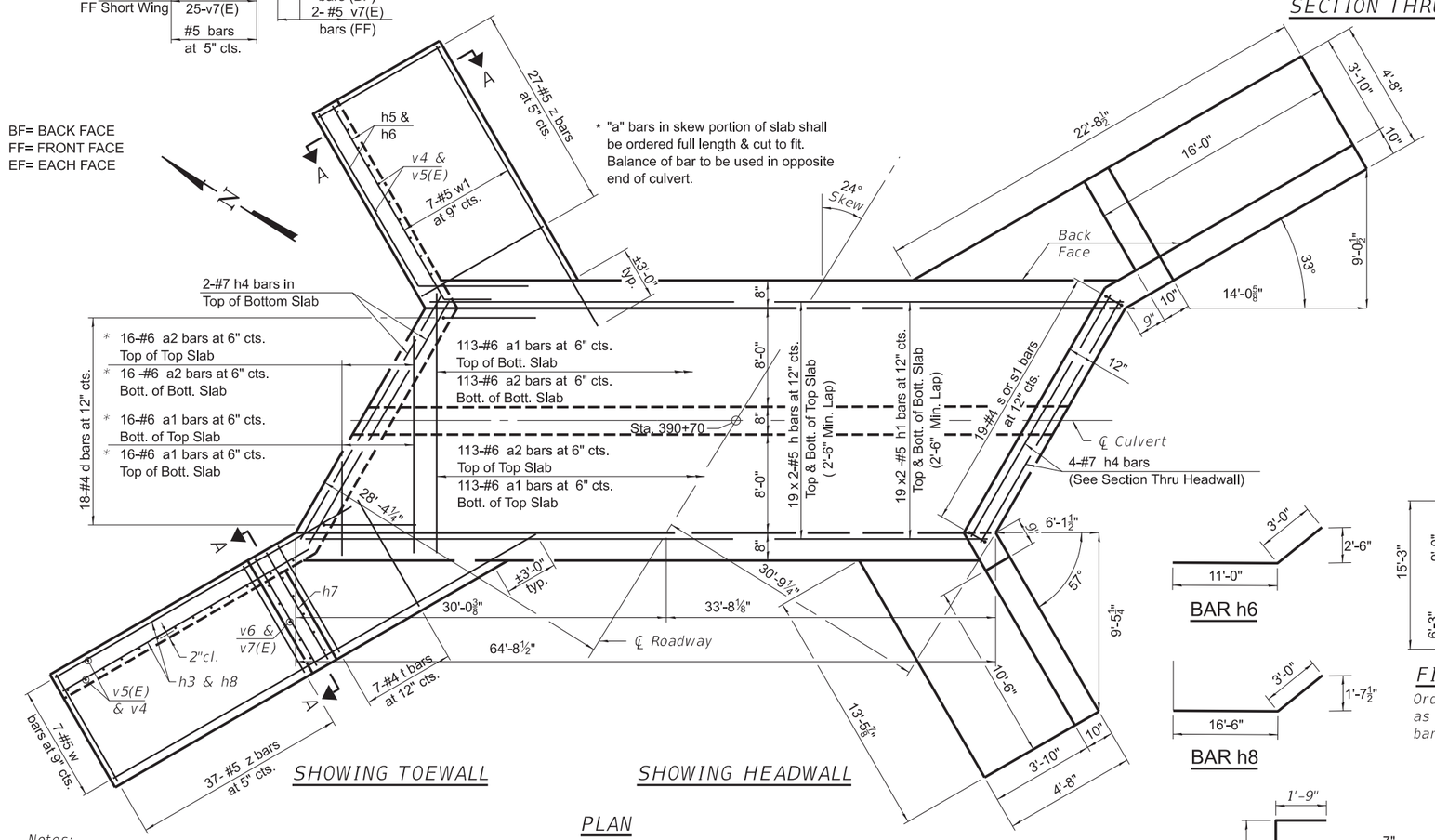

PLAN

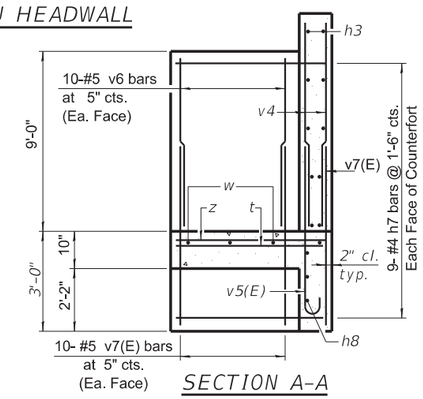

SECTION A-A

Showing long wing with counterfort. Omit counterfort at short wing.

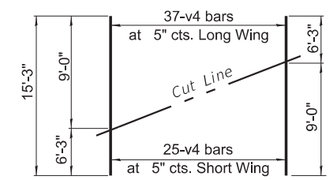

FIELD CUTTING DIAGRAM

Order bars shown full length. Cut as shown and use remainder of bars in opposite wingwall.

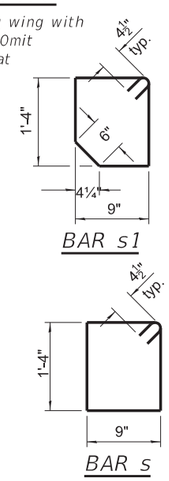

BILL OF MATERIAL

Bar	No.	Size	Length	Shape
a1	258	#6	19'-1"	
a2	258	#6	17'-9"	
d	36	#4	4'-5"	
h	76	#5	33'-6"	
h1	76	#5	33'-6"	
h2	81	#5	23'-3"	
h3	24	#5	16'-6"	
h4	12	#7	19'-3"	
h5	24	#5	11'-0"	
h6	92	#5	14'-0"	
h7	36	#4	4'-4"	
h8	92	#5	19'-6"	
s	19	#4	4-11"	
s1	19	#4	4'-9"	
t	14	#4	4'-4"	
v	309	#6	8'-0"	
v1	309	#6	4'-2"	
v3	16	#5	9'-3"	
v4	124	#5	15'-3"	
v5(E)	132	#5	6'-5"	
v6	40	#5	8'-9"	
v7(E)	172	#5	5'-10"	
w	14	#5	25'-6"	
w1	14	#5	16'-3"	
z	128	#5	7'-0"	
Concrete Box Culverts			Cu. Yd.	147.8
Reinforcement Bars			Pound	35,980
Reinforcement Bars, Epoxy Coated			Pound	1,930

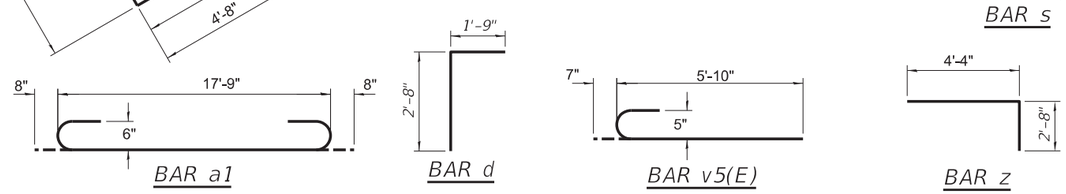

Notes:

Bars indicated thus 12 x 4-#5 etc. indicates 12 lines of bars with 4 lengths per line.

At the Contractor's option, a longer v1 bar may be ordered to replace the v bar. No reduction in quantities shall be made for this substitution.

TSA-SB-LT-RS 2-17-2017

LICENSED STRUCTURAL ENGINEER JEREMY M. BUENING 081-6696 MOUNT ZION STATE OF ILLINOIS

Jeremy Buening 4/17/24

JEREMY M BUENING, S.E., Date

License Expires 11/30/24

I certify that to the best of my knowledge, information and belief, this bridge/box culvert design is structurally adequate for the design loading shown on the plans. The design is an economical one for the style of structure and complies with requirements of the current 'AASHTO Standard Specifications for Highway Bridges'.

MODEL: Default
FILE NAME: R:\pf_County\7997 Carroll County - Ideal Road Reconstruction\CADD\CADD_Struct\Structure No. 2 (390+70)\7997-Culvert at station 390+70.dgn

CHASTAIN & ASSOCIATES LLC
CONSULTING ENGINEERS

USER NAME = dwozniarski	DESIGNED -	REVISED -	
	DRAWN -	REVISED -	
PLOT SCALE = 0.167 ' / in.	CHECKED -	REVISED -	
PLOT DATE = 4/17/2024	DATE - 04/17/2024	REVISED -	

STATE OF ILLINOIS
DEPARTMENT OF TRANSPORTATION

IDEAL ROAD RECONSTRUCTION
CULVERT DETAILS – STRUCTURE NO. 390+70

SCALE: SHEET 1 OF 1 SHEETS STA. TO STA.

F.A.S. RTE.	SECTION	COUNTY	TOTAL SHEETS	SHEET NO.
1084	20-00102-00-PV	CARROLL	217	76

CONTRACT NO. 85761

ILLINOIS FED. AID PROJECT

85761

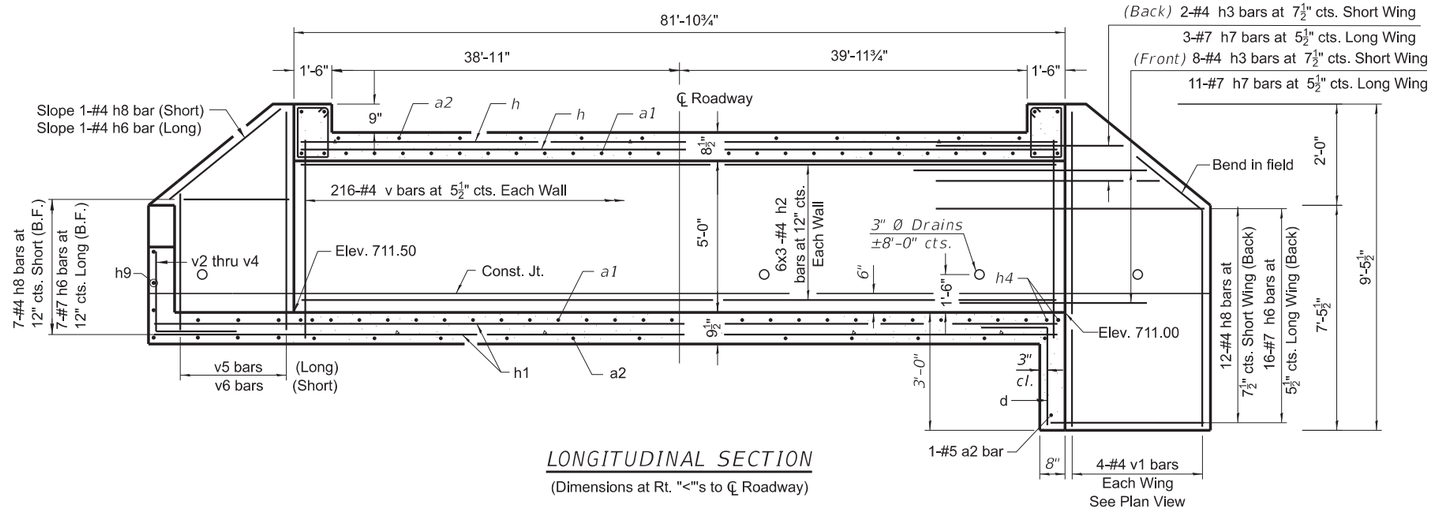

LONGITUDINAL SECTION

(Dimensions at Rt. "<"'s to ℄ Roadway)

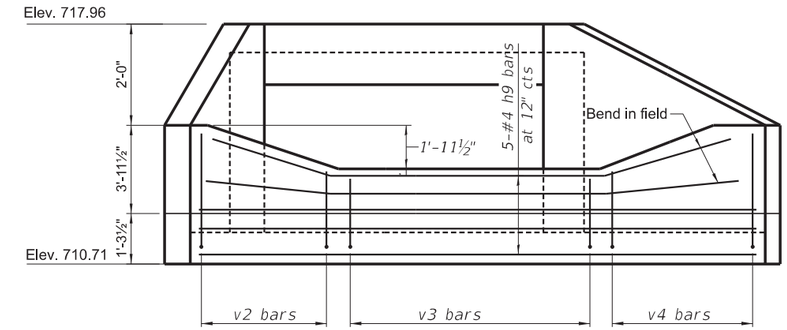

UPSTREAM END ELEVATION WITH WEIR

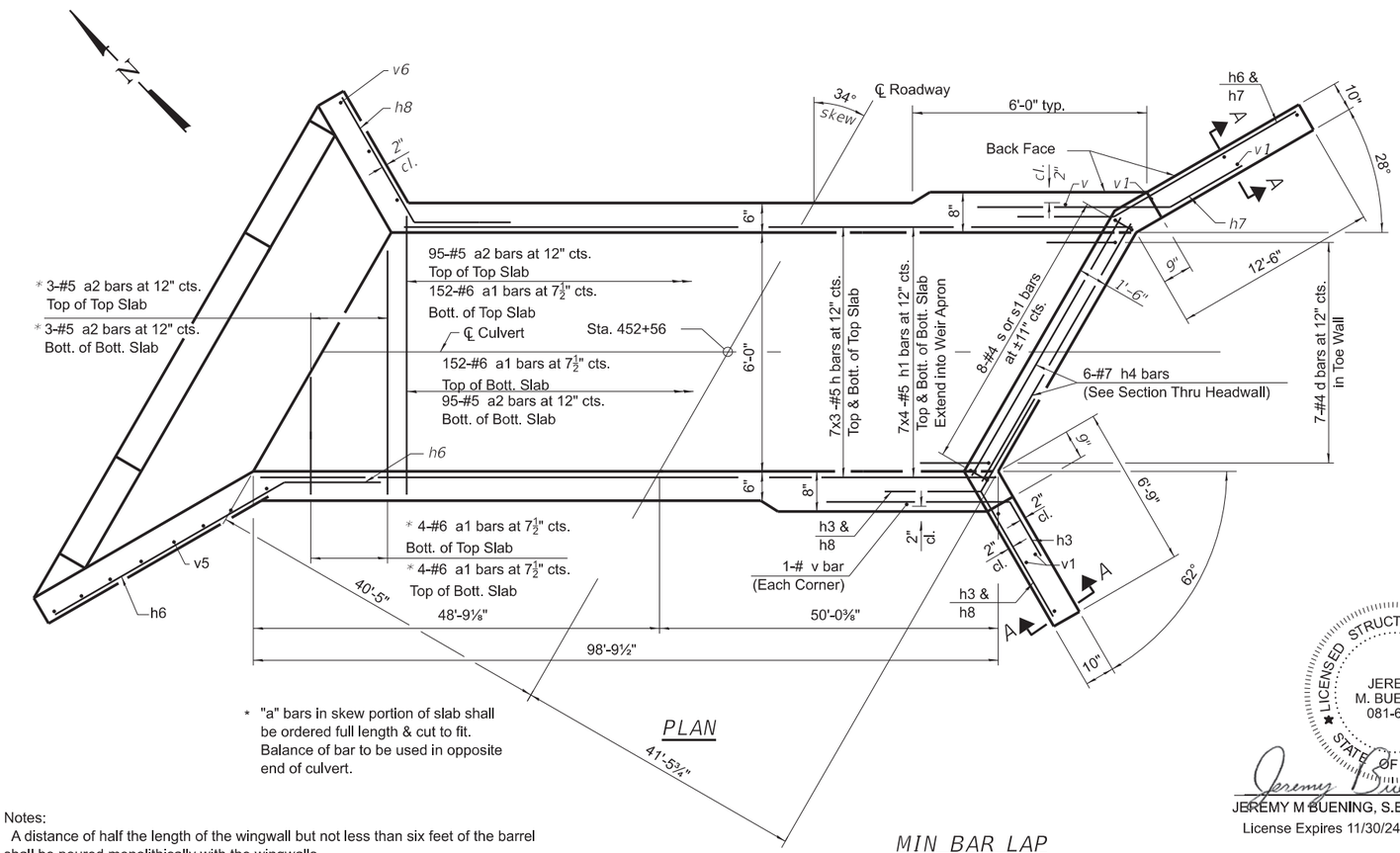

PLAN

* "a" bars in skew portion of slab shall be ordered full length & cut to fit. Balance of bar to be used in opposite end of culvert.

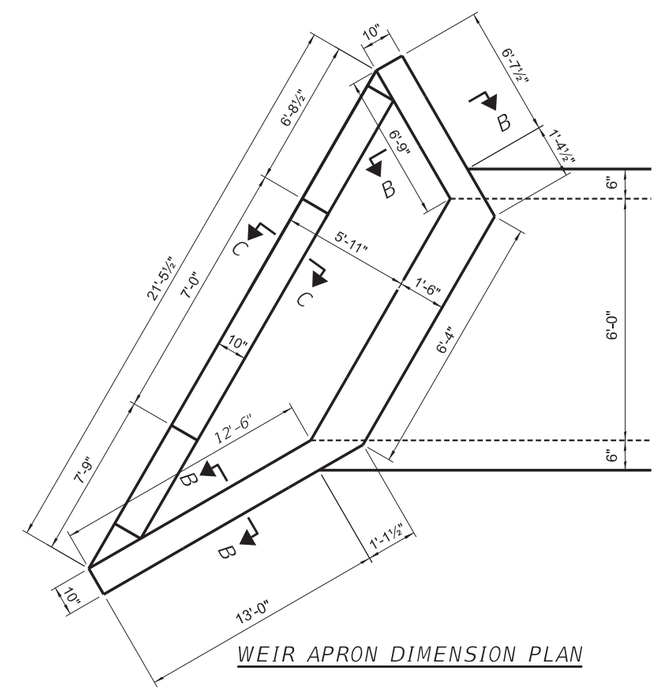

WEIR APRON DIMENSION PLAN

Notes:

A distance of half the length of the wingwall but not less than six feet of the barrel shall be poured monolithically with the wingwalls.

Bars indicated thus 12 x 4-#5 etc. indicates 12 lines of bars with 4 lengths per line.

MIN BAR LAP

#4 bar = 1'-9"

#5 bar = 2'-6"

LICENSED STRUCTURAL ENGINEER JEREMY M. BUENING 081-6696 STATE OF ILLINOIS

Jeremy Buening 4/17/24

JEREMY M BUENING, S.E., Date

License Expires 11/30/24

I certify that to the best of my knowledge, information and belief, this bridge/box culvert design is structurally adequate for the design loading shown on the plans. The design is an economical one for the style of structure and complies with requirements of the current 'AASHTO Standard Specifications for Highway Bridges'.

MODEL: Default
FILE NAME: R:\Pt County\7997 Carroll County - Ideal Road Reconstruct\Bm\CADD\CADD Struct\Structure No. 3 (452+56)7997-Culvert at station 452+56.dgn

CHASTAIN & ASSOCIATES LLC
CONSULTING ENGINEERS

USER NAME = dwozniarski	DESIGNED -	REVISED -	
	DRAWN -	REVISED -	
PLOT SCALE = 0.167 ' / in.	CHECKED -	REVISED -	
PLOT DATE = 4/17/2024	DATE - 04/17/2024	REVISED -	

STATE OF ILLINOIS
DEPARTMENT OF TRANSPORTATION

IDEAL ROAD RECONSTRUCTION
CULVERT DETAILS – STRUCTURE NO. 452+56

SCALE: SHEET 1 OF 2 SHEETS STA. TO STA.

F.A.S. RTE.	SECTION	COUNTY	TOTAL SHEETS	SHEET NO.
1084	20-00102-00-PV	CARROLL	217	77
		CONTRACT NO. 85761		
		ILLINOIS	FED. AID PROJECT	

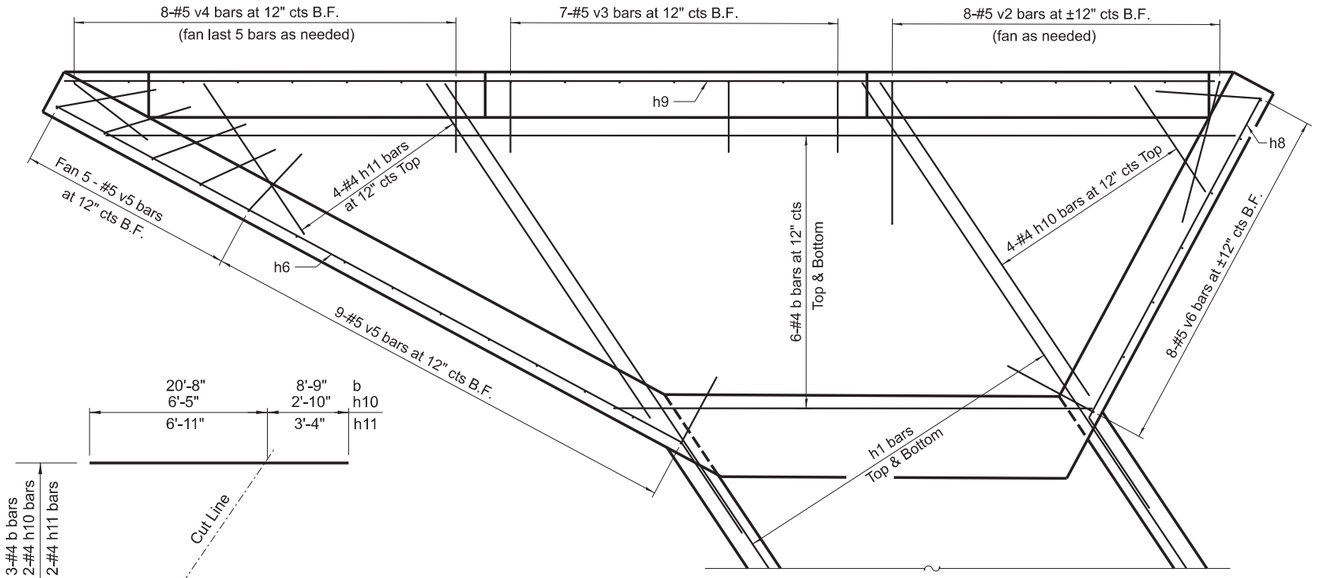

WEIR APRON REINFORCEMENT PLAN

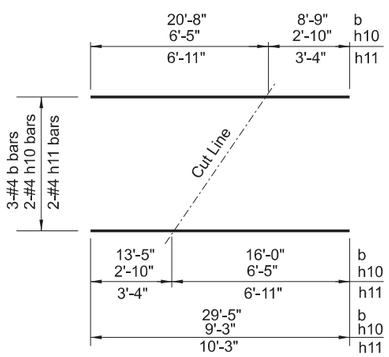

BAR CUTTING DIAGRAM

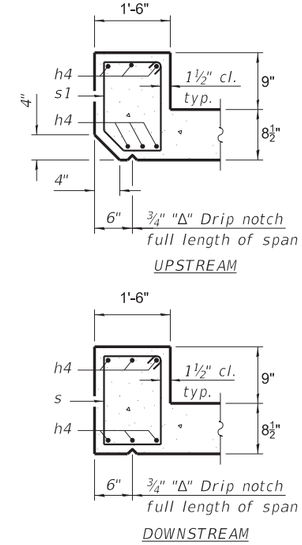

SECTION THRU HEADWALL

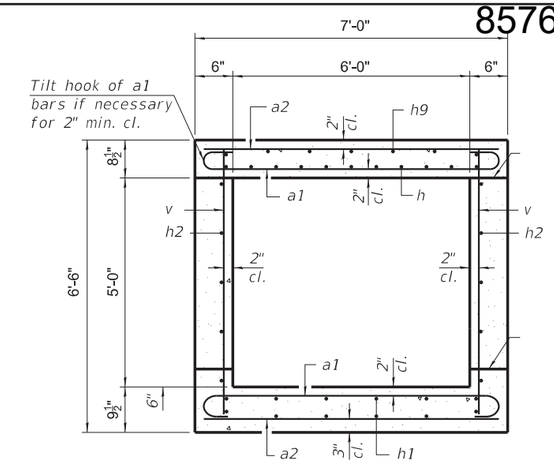

SECTION THRU BARREL

BILL OF MATERIAL

Bar	No.	Size	Length	Shape
a1	312	#6	8'-0"	
a2	197	#5	6'-8"	
b	6	#4	29'-5"	
d	7	#4	4'-5"	
h	42	#5	34'-6"	
h1	56	#5	28'-3"	
h2	36	#4	34'-0"	
h3	10	#4	8'-0"	
h4	14	#7	6'-3"	
h6	24	#7	16'-0"	
h7	14	#7	8'-0"	
h8	20	#4	9'-6"	
h9	5	#4	21'-2"	
h10	2	#4	9'-3"	
h11	2	#4	10'-3"	
s	8	#4	5'-8"	
s1	8	#4	5'-6"	
v	434	#4	6'-1"	
v1	8	#4	9'-1"	
v2	4	#5	16'-0"	
v3	7	#5	5'-6"	
v4	4	#5	13'-0"	
v5	7	#5	17'-0"	
v6	4	#5	17'-0"	
Concrete Box Culverts		Cu. Yd.	72.1	
Reinforcement Bars		Pound	12,930	

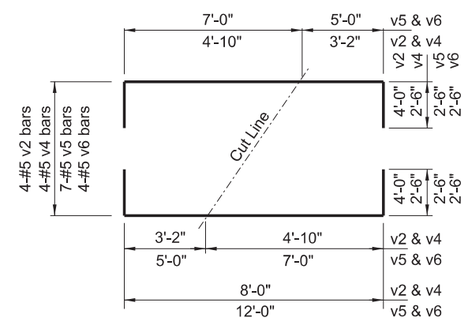

BAR CUTTING DIAGRAM

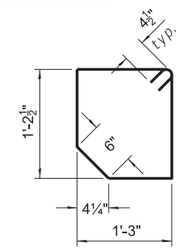

BAR s1

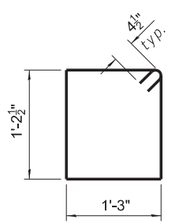

BAR s

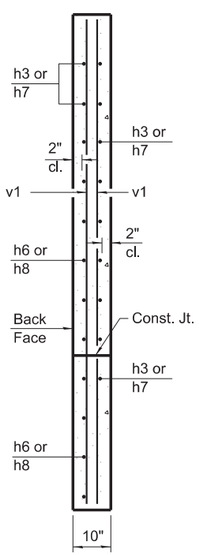

SECTION A-A

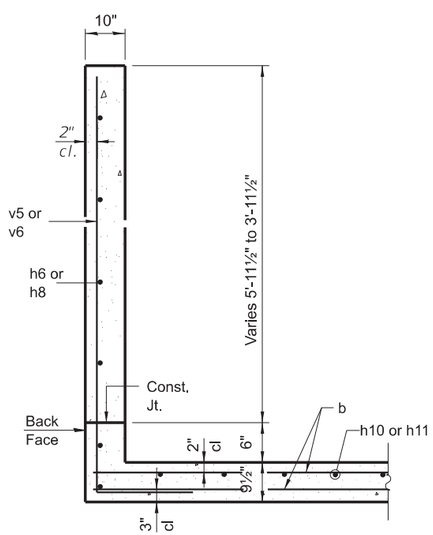

SECTION B-B

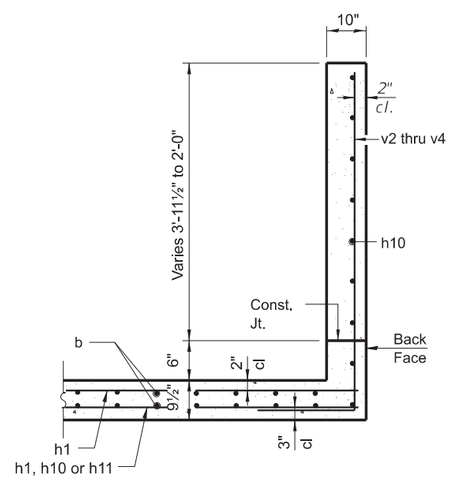

SECTION C-C

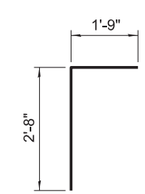

BAR d

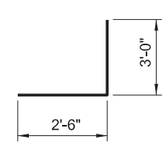

BAR v3

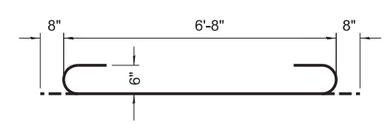

BAR a1

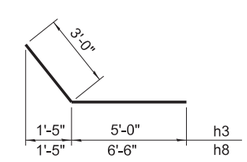

BARS h3 & h8

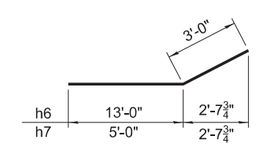

BARS h6 & h7

MODEL: Default
FILE NAME: R:\Pit County\7997 Carroll County - Ideal Road Reconstruction\CADD\CADD Struct\Structure No. 3 (452+56)7997-Culvert at station 452+56.dgn

CHASTAIN & ASSOCIATES LLC
CONSULTING ENGINEERS

USER NAME = dwozniarski	DESIGNED -	REVISED -	
	DRAWN -	REVISED -	
PLOT SCALE = 0.167 ' / in.	CHECKED -	REVISED -	
PLOT DATE = 4/17/2024	DATE - 04/17/2024	REVISED -	

STATE OF ILLINOIS
DEPARTMENT OF TRANSPORTATION

IDEAL ROAD RECONSTRUCTION
CULVERT DETAILS – STRUCTURE NO. 452+56

SCALE: | SHEET 2 OF 2 SHEETS | STA. | TO STA.

F.A.S. RTE.	SECTION	COUNTY	TOTAL SHEETS	SHEET NO.
1084	20-00102-00-PV	CARROLL	217	78
		CONTRACT NO. 85761		
		ILLINOIS	FED. AID PROJECT	

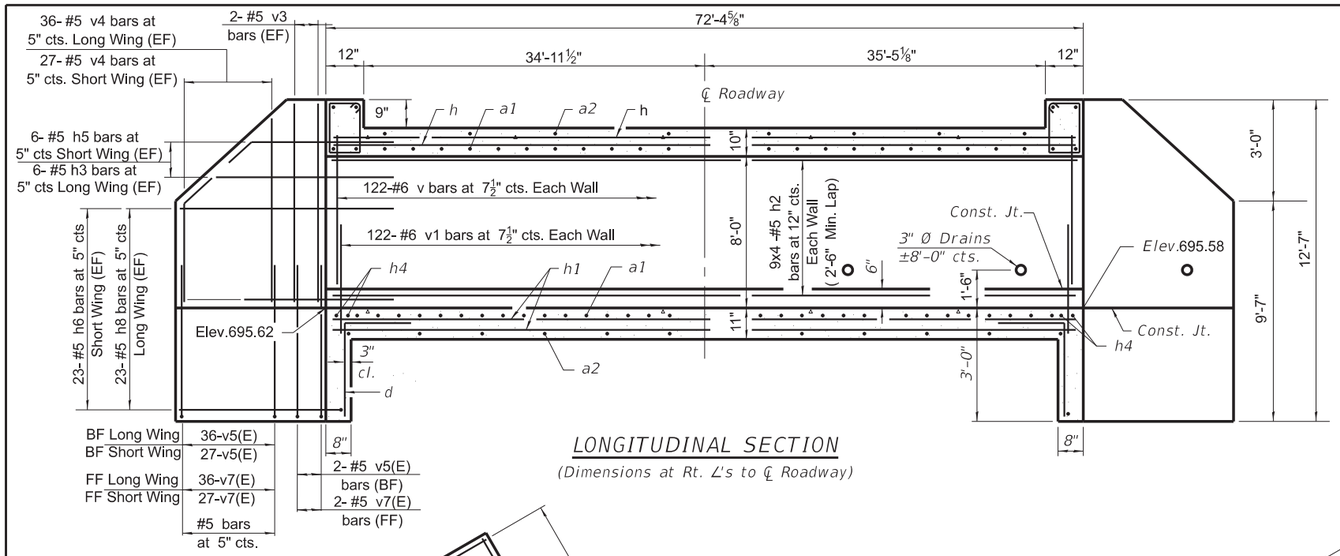

LONGITUDINAL SECTION

(Dimensions at Rt. ∠'s to ℄ Roadway)

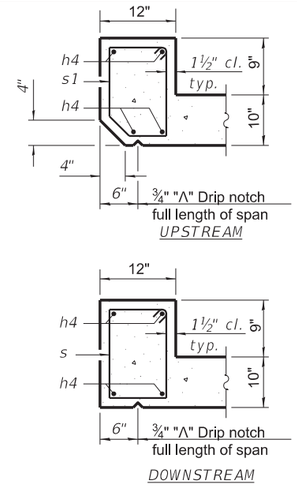

SECTION THRU HEADWALL

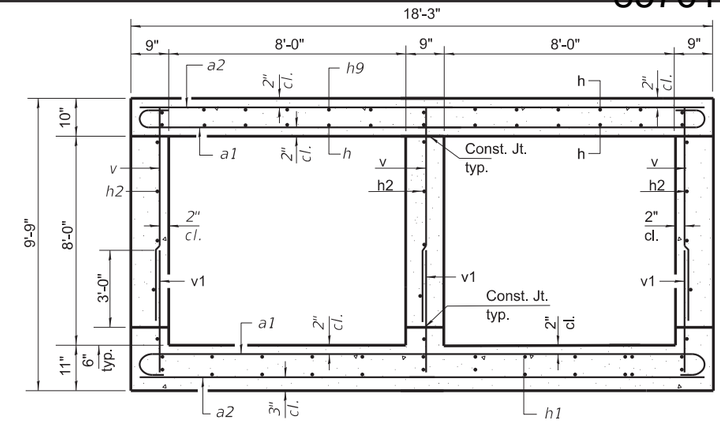

SECTION THRU BARREL

BILL OF MATERIAL

Bar	No.	Size	Length	Shape
a1	304	#6	19'-4"	
a2	304	#6	18'-0"	
d	38	#4	4'-5"	
h	54	#5	27'-0"	
h1	54	#5	27'-0"	
h2	108	#5	21'-0"	
h3	24	#5	15'-3"	
h4	12	#7	18'-9"	
h5	24	#5	11'-6"	
h6	92	#5	14'-6"	
h7	36	#4	4'-4"	
h8	92	#5	18'-2"	
s	19	#4	4-11"	
s1	19	#4	4'-9"	
t	14	#4	4'-4"	
v	366	#6	8'-0"	
v1	366	#6	4'-2"	
v3	16	#5	9'-3"	
v4	126	#5	15'-3"	
v5(E)	134	#5	6'-5"	
v6	40	#5	8'-9"	
v7(E)	174	#5	5'-10"	
w	14	#5	23'-6"	
w1	14	#5	17'-0"	
z	122	#5	7'-0"	
Concrete Box Culverts			Cu. Yd.	175.5
Reinforcement Bars			Pound	37,790
Reinforcement Bars, Epoxy Coated			Pound	1,960

B.F= BACK FACE
F.F= FRONT FACE
E.F= EACH FACE

* "a" bars in skew portion of slab shall be ordered full length & cut to fit. Balance of bar to be used in opposite end of culvert.

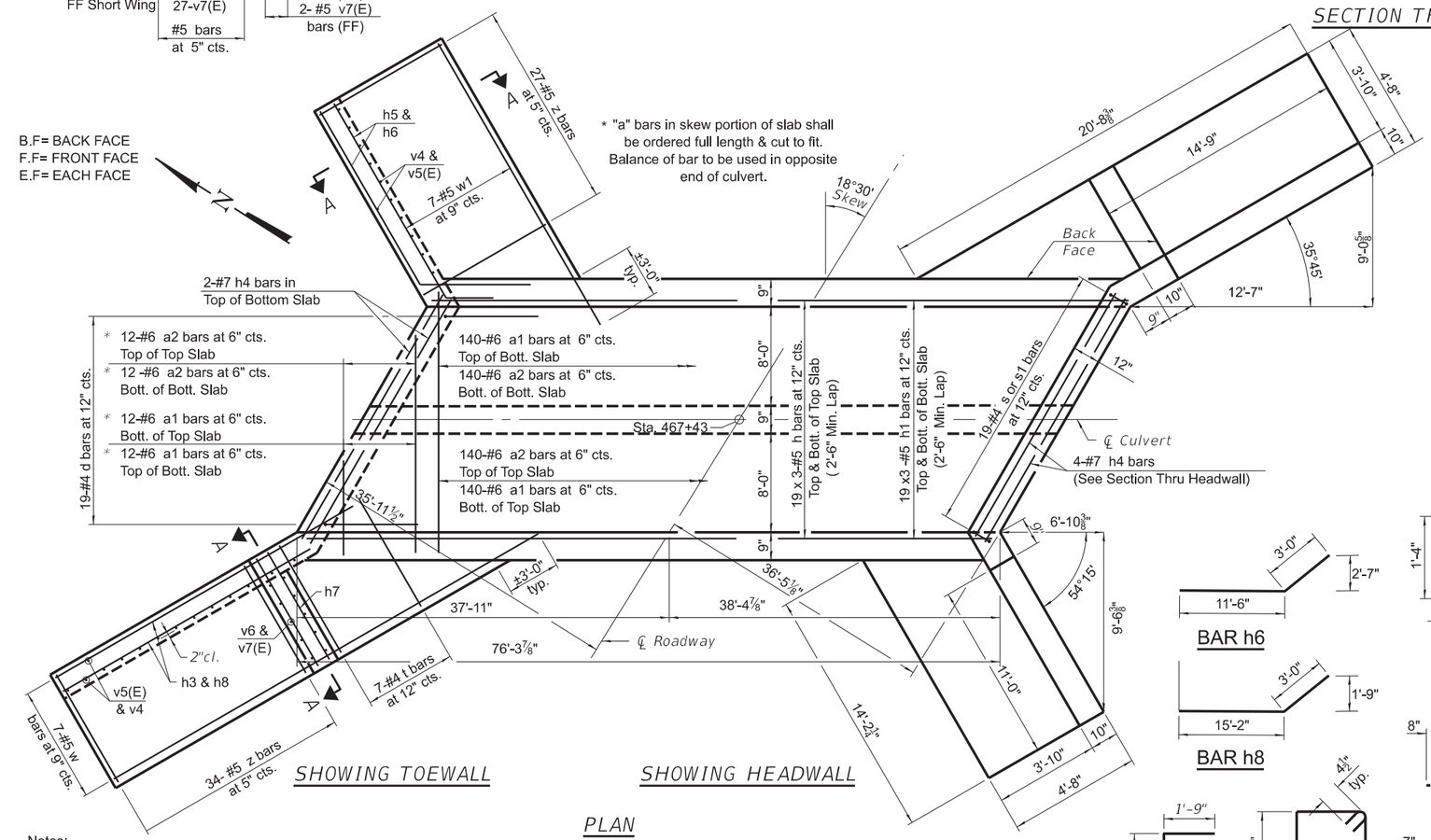

SHOWING TOEWALL

SHOWING HEADWALL

PLAN

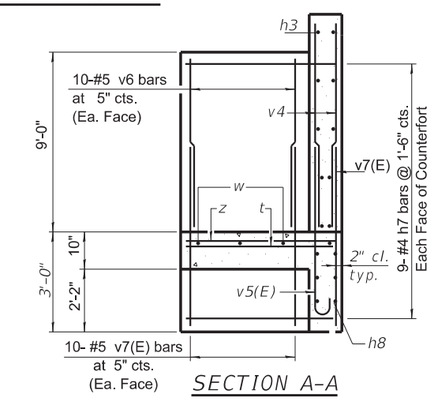

SECTION A-A

Showing long wing with counterfort. Omit counterfort at short wing.

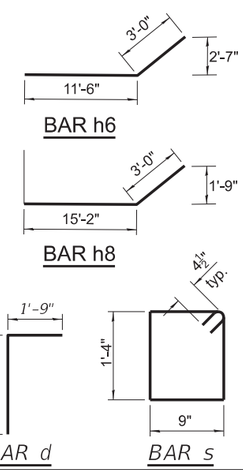

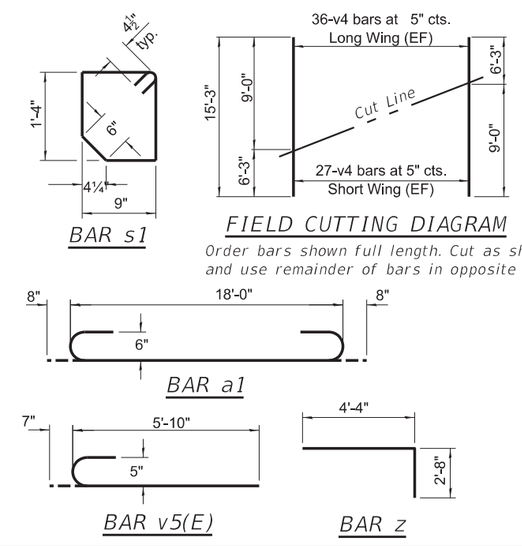

FIELD CUTTING DIAGRAM

Order bars shown full length. Cut as shown and use remainder of bars in opposite wingwall.

Notes:
Bars indicated thus 9 x 3-#5 etc. indicates 9 lines of bars with 3 lengths per line.
At the Contractor's option, a longer v1 bar may be ordered to replace the v bar. No reduction in quantities shall be made for this substitution.

LICENSED STRUCTURAL ENGINEER
JEREMY M. BUENING
081-6696
MOUNT ZION
STATE OF ILLINOIS

Jeremy Buening 4/17/24
JEREMY M BUENING, S.E., Date
License Expires 11/30/24

I certify that to the best of my knowledge, information and belief, this bridge/box culvert design is structurally adequate for the design loading shown on the plans. The design is an economical one for the style of structure and complies with requirements of the current 'AASHTO Standard Specifications for Highway Bridges'.

TSA-SB-LT-RS 2-17-2017

CHASTAIN & ASSOCIATES LLC
CONSULTING ENGINEERS

USER NAME = dwozniarski	DESIGNED -	REVISED -	
	DRAWN -	REVISED -	
PLOT SCALE = 0.167 ' / in.	CHECKED -	REVISED -	
PLOT DATE = 4/17/2024	DATE - 04/17/2024	REVISED -	

STATE OF ILLINOIS
DEPARTMENT OF TRANSPORTATION

IDEAL ROAD RECONSTRUCTION
CULVERT DETAILS – STRUCTURE NO. 467+43

SCALE: SHEET 1 OF 1 SHEETS STA. TO STA.

F.A.S. RTE.	SECTION	COUNTY	TOTAL SHEETS	SHEET NO.
1084	20-00102-00-PV	CARROLL	217	79
		CONTRACT NO. 85761		
		ILLINOIS FED. AID PROJECT		

MODEL: Default
FILE NAME: R:\Pt County\7997 Carroll County - Ideal Road Reconstruction\CADD\CADD Struct\Structure No. 4 (467+43)\7997-Culvert at station 467+43.dgn

85761

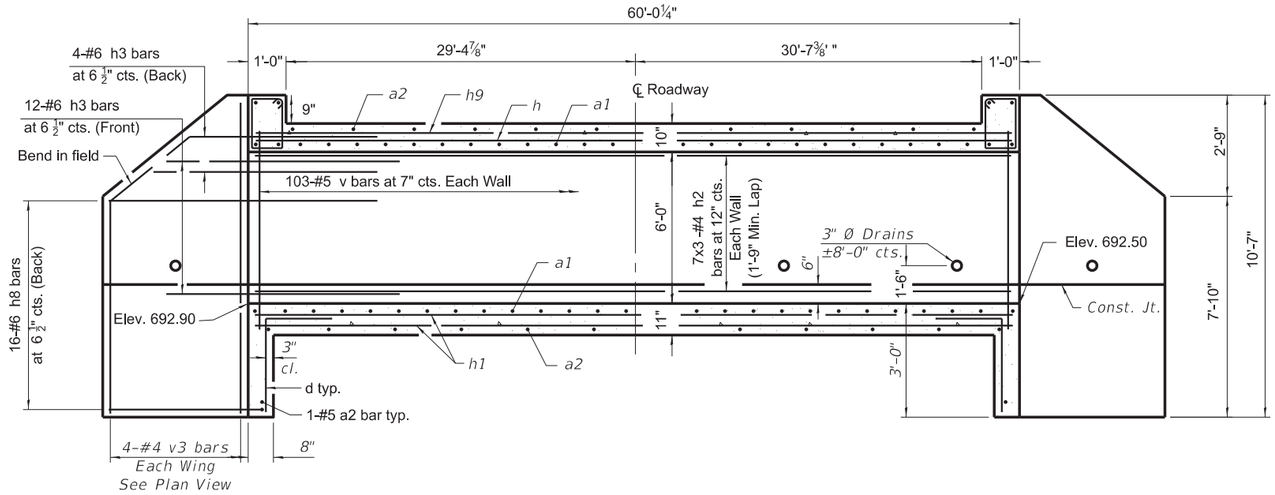

LONGITUDINAL SECTION

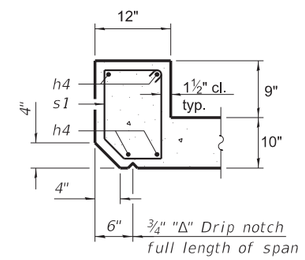

UPSTREAM

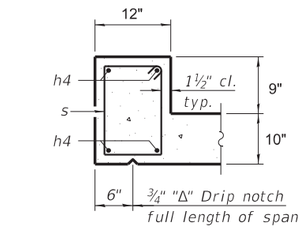

DOWNSTREAM

SECTION THRU HEADWALL

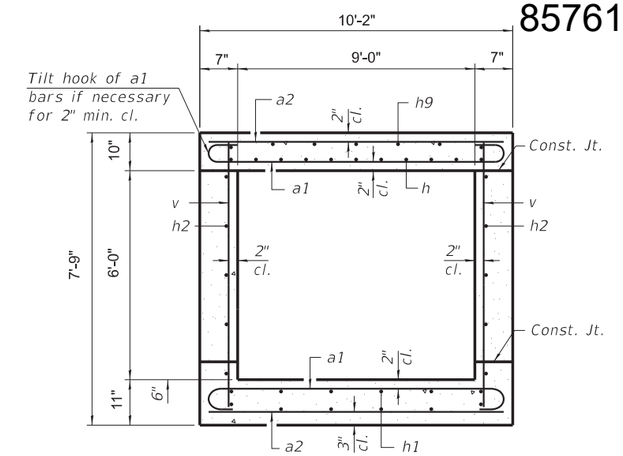

SECTION THRU BARREL

BILL OF MATERIAL

Bar	No.	Size	Length	Shape
a1	236	#6	11'-2"	
a2	120	#5	9'-10"	
d	20	#4	4'-5"	
h	22	#5	31'-0"	
h1	44	#5	31'-0"	
h2	42	#4	21'-0"	
h3	64	#6	8'-0"	
h4	8	#7	9'-6"	
h8	64	#6	13'-0"	
h9	33	#4	21'-0"	
s	10	#4	5'-3"	
s1	10	#4	5'-1"	
v	206	#5	7'-4"	
v3	16	#4	10'-2"	
Concrete Box Culverts		Cu. Yd.	68.7	
Reinforcement Bars		Pound	12,360	

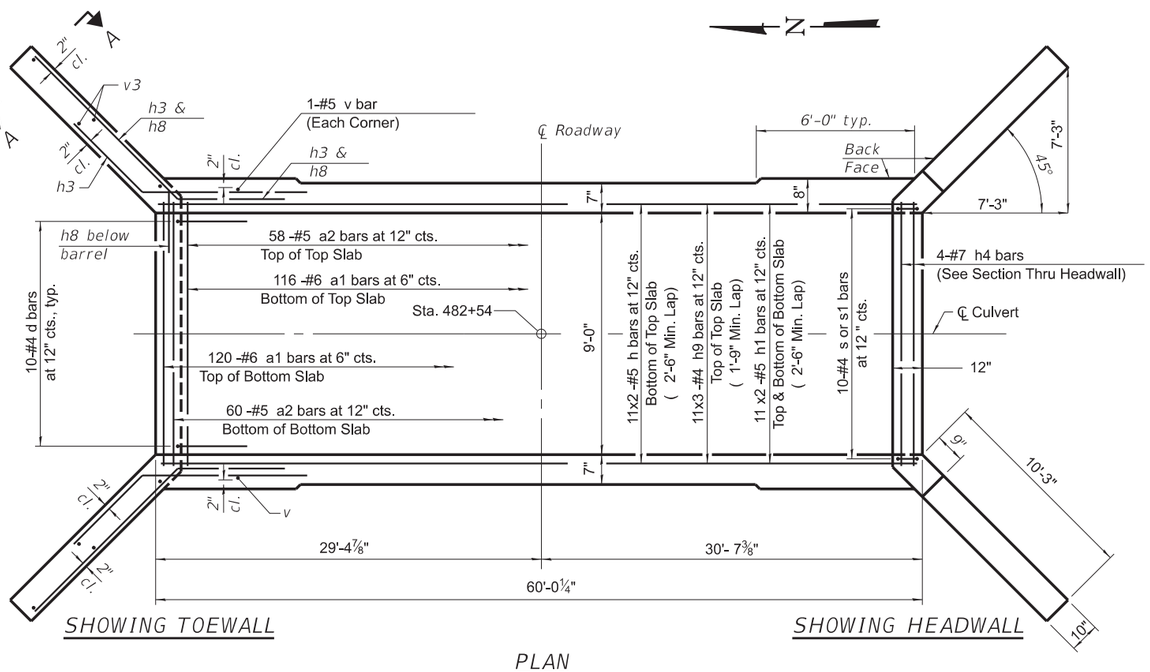

SHOWING TOEWALL

SHOWING HEADWALL

PLAN

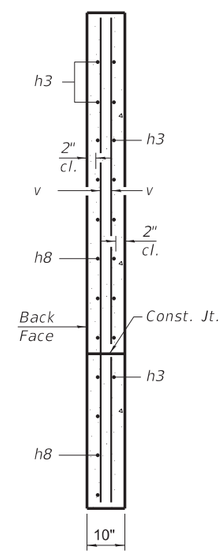

SECTION A-A

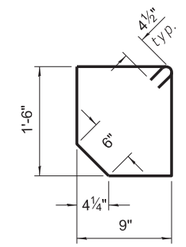

BAR s1

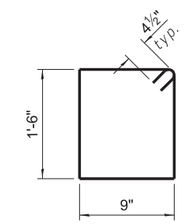

BAR s

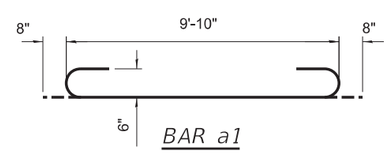

BAR a1

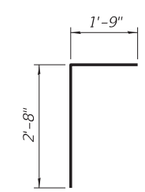

BAR d

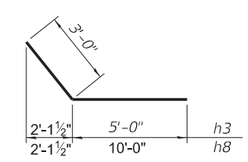

BARS h3 & h8

Notes:
A distance of half the length of the wingwall but not less than six feet of the barrel shall be poured monolithically with the wingwalls.
Bars indicated thus 12 x 4-#5 etc. indicates 12 lines of bars with 4 lengths per line.

LICENSED STRUCTURAL ENGINEER
JEREMY
M. BUENING
081-6696
MOUNT ZION
STATE OF ILLINOIS

Jeremy Buening 4/17/24
JEREMY M BUENING, P.E., S.E. Date
License Expires 11/30/24

I certify that to the best of my knowledge, information and belief, this bridge/box culvert design is structurally adequate for the design loading shown on the plans. The design is an economical one for the style of structure and complies with requirements of the current 'AASHTO Standard Specifications for Highway Bridges'.

TSA-SB-HC-ZS 2-17-2017

MODEL: Structure No. 1 Detail
FILE NAME: R:\PC County\7997 Carroll County - Ideal Road Reconstruction\CADD\CADD Struct\Structure No. 5 (482+54)\7997-Culvert at station 482+54- Changes.dgn

CHASTAIN & ASSOCIATES LLC
CONSULTING ENGINEERS

USER NAME = dwozniarski	DESIGNED -	REVISED -	
	DRAWN -	REVISED -	
PLOT SCALE = 0.16666633 ' / in.	CHECKED -	REVISED -	
PLOT DATE = 4/17/2024	DATE - 04/17/2024	REVISED -	

STATE OF ILLINOIS
DEPARTMENT OF TRANSPORTATION

IDEAL ROAD RECONSTRUCTION
CULVERT DETAILS – STRUCTURE NO. 482+54

SCALE: SHEET 1 OF 1 SHEETS STA. TO STA.

F.A.S. RTE.	SECTION	COUNTY	TOTAL SHEETS	SHEET NO.
1084	20-00102-00-PV	CARROLL	217	80
		CONTRACT NO. 85761		
		ILLINOIS	FED. AID PROJECT	

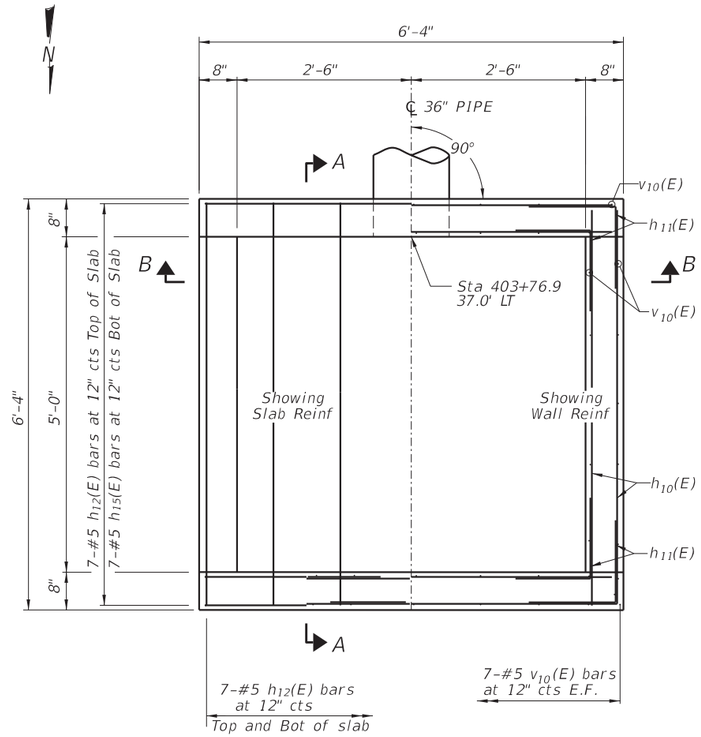

PLAN VIEW - DROP BOX NO 1

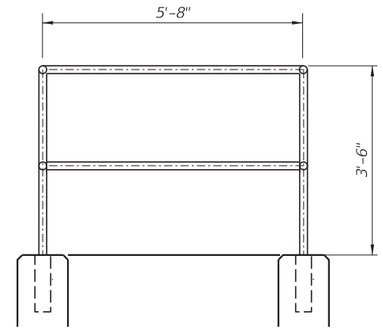

HANDRAIL DETAIL

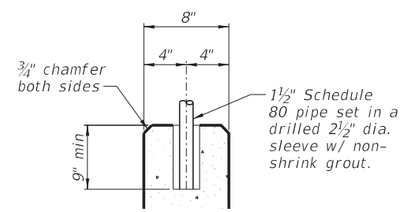

HANDRAIL POST DETAIL

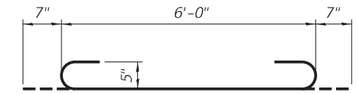

BAR $h_{14}(E)$

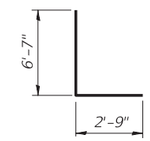

BAR $v_{10}(E)$

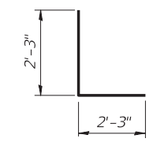

BAR $h_{11}(E)$

BILL OF MATERIAL

	Bar	No.	Size	Length	Shape
	$h_{10}(E)$	48	#4	6'-0"	
	$h_{11}(E)$	56	#4	4'-6"	
	$h_{12}(E)$	21	#4	6'-0"	
	$h_{13}(E)$	8	#5	4'-6"	
	$h_{14}(E)$	7	#5	7'-2"	
	$v_{10}(E)$	50	#5	9'-4"	
	$v_{11}(E)$	8	#4	2'-8"	
*	Pipe Handrail			Foot	22
*	Concrete Structures			Cu. Yd.	4.3
*	Reinforcement Bars, Epoxy Coated			Pound	1040
	Drop Box No. 1			Each	1

*For Information Only

MIN BAR LAP

#4 bar = 2'-0"

DESIGN STRESSES

fy = 60,000 psi
f'c = 3,500 psi

GENERAL NOTES

Reinforcement bars designated (E) shall be epoxy coated.

The Contractor shall be responsible for diverting the water flow from the construction area using a method meeting the approval of the Engineer. Cost included with "Drop Box No. 1".

Exposed edges shall be beveled ¾" .

Structure excavation, backfill, and pipe handrail shall be included in cost of Drop Box No. 1.

Pipe handrail shall be fabricated according to 509.05 and shall be galvanized. Base Plates may be substituted for embedded posts where approved by the Engineer.

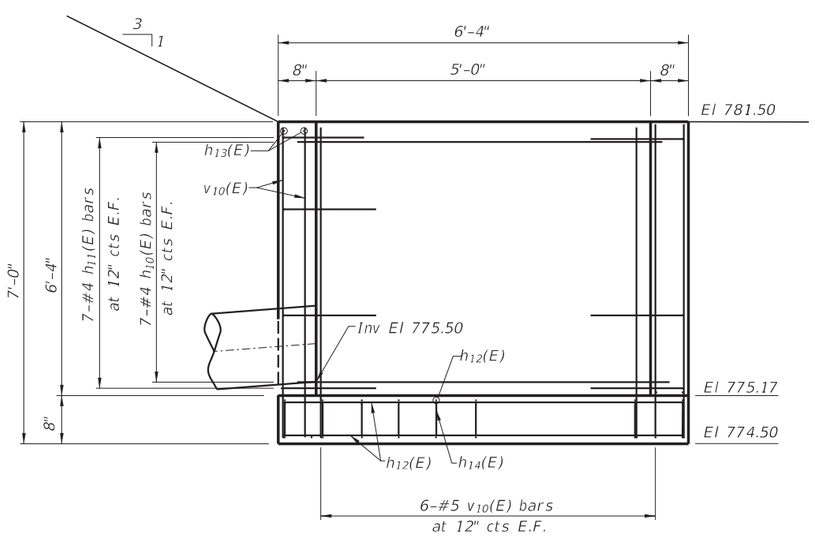

SECTION A-A

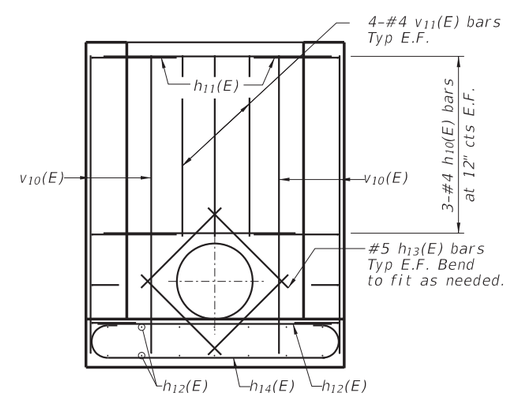

SECTION B-B

LICENSED STRUCTURAL ENGINEER
JEREMY
M. BUENING
081-6696
MOUNT ZION
STATE OF ILLINOIS

Jeremy Buening 4/17/24
JEREMY M BUENING, P.E., S.E. Date
License Expires 11/30/24

I certify that to the best of my knowledge, information and belief, this bridge/box culvert design is structurally adequate for the design loading shown on the plans. The design is an economical one for the style of structure and complies with requirements of the current 'AASHTO Standard Speci cations for Highway Bridges'.

MODEL: Structure No. 1 Detail
FILE NAME: R:\pf_County\7997 Carroll County - Ideal Road Reconstruction\CADD\CADD_Struct\Drop Boxes.dgn

CHASTAIN & ASSOCIATES LLC
CONSULTING ENGINEERS

USER NAME = dwozniarski	DESIGNED -	REVISED -	
	DRAWN -	REVISED -	
PLOT SCALE = 1.99992000 ' / in.	CHECKED -	REVISED -	
PLOT DATE = 4/17/2024	DATE - 04/17/2024	REVISED -	

STATE OF ILLINOIS
DEPARTMENT OF TRANSPORTATION

IDEAL ROAD RECONSTRUCTION
DROP BOX DETAILS STRUCTURE NO. 403+76

SCALE: | SHEET 1 OF 1 SHEETS | STA. | TO STA.

F.A.S. RTE.	SECTION	COUNTY	TOTAL SHEETS	SHEET NO.
1084	20-00102-00-PV	CARROLL	217	81

CONTRACT NO. 85761

ILLINOIS | FED. AID PROJECT

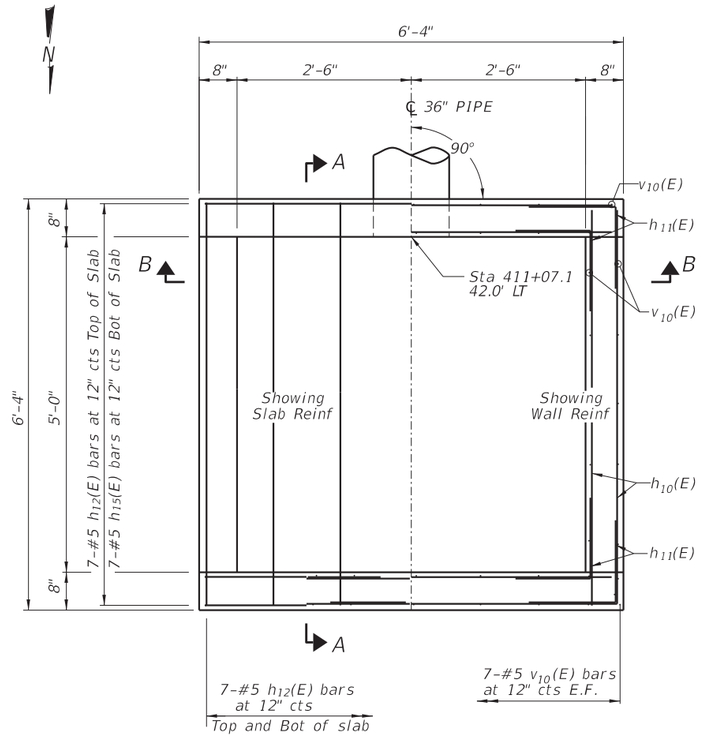

PLAN VIEW - DROP BOX NO 2

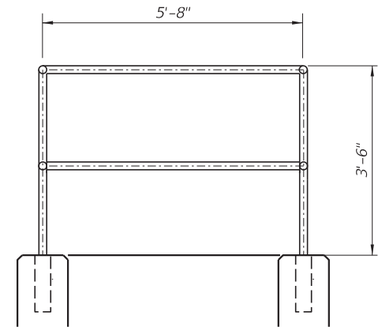

HANDRAIL DETAIL

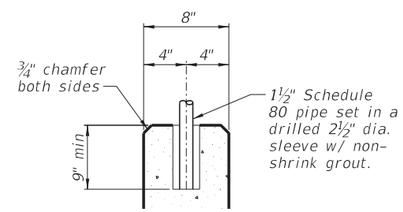

HANDRAIL POST DETAIL

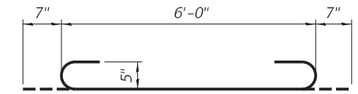

BAR $h_{14}(E)$

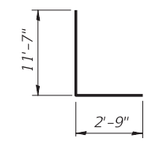

BAR $v_{10}(E)$

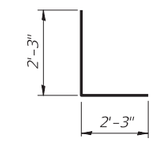

BAR $h_{11}(E)$

BILL OF MATERIAL

	Bar	No.	Size	Length	Shape
	$h_{10}(E)$	88	#4	6'-0"	
	$h_{11}(E)$	96	#4	4'-6"	
	$h_{12}(E)$	21	#4	6'-0"	
	$h_{13}(E)$	8	#5	4'-6"	
	$h_{14}(E)$	7	#5	7'-2"	
	$v_{10}(E)$	50	#5	14'-4"	
	$v_{11}(E)$	6	#4	7'-0"	
*	Pipe Handrail			Foot	22
*	Concrete Structures			Cu. Yd.	7.1
*	Reinforcement Bars, Epoxy Coated			Pound	1590
	Drop Box No. 2			Each	1

*For Information Only

MIN BAR LAP

#4 bar = 2'-0"

DESIGN STRESSES

fy = 60,000 psi
f'c = 3,500 psi

GENERAL NOTES

Reinforcement bars designated (E) shall be epoxy coated.

The Contractor shall be responsible for diverting the water flow from the construction area using a method meeting the approval of the Engineer. Cost included with "Drop Box No. 2".

Exposed edges shall be beveled ¾" .

Structure excavation, backfill, and pipe handrail shall be included in cost of Drop Box No. 2.

Pipe handrail shall be fabricated according to 509.05 and shall be galvanized. Base Plates may be substituted for embedded posts where approved by the Engineer.

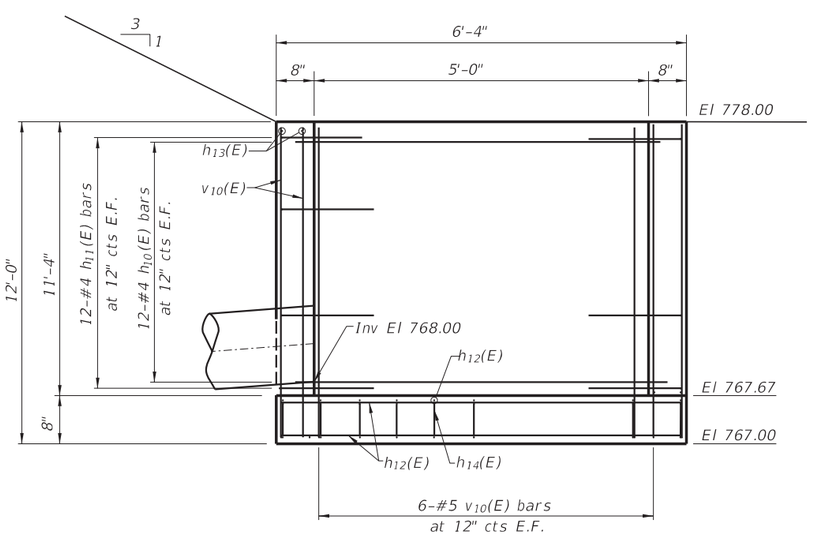

SECTION A-A

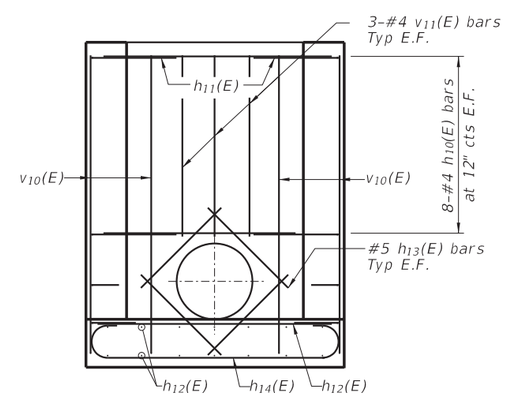

SECTION B-B

LICENSED STRUCTURAL ENGINEER
JEREMY
M. BUENING
081-6696
MOUNT ZION
STATE OF ILLINOIS

Jeremy Buening 4/17/24
JEREMY M BUENING, P.E., S.E. Date
License Expires 11/30/24

I certify that to the best of my knowledge, information and belief, this bridge/box culvert design is structurally adequate for the design loading shown on the plans. The design is an economical one for the style of structure and complies with requirements of the current 'AASHTO Standard Speci cations for Highway Bridges'.

MODEL: Structure No. 1 Detail
FILE NAME: R:\PJ County\7997 Carroll County - Ideal Road Reconstruction\CADD\CADD Struct\Drop Boxes.dgn

CHASTAIN & ASSOCIATES LLC
CONSULTING ENGINEERS

USER NAME = dwozniarski	DESIGNED -	REVISED -	
	DRAWN -	REVISED -	
PLOT SCALE = 2.00000000 ' / in.	CHECKED -	REVISED -	
PLOT DATE = 4/17/2024	DATE - 04/17/2024	REVISED -	

STATE OF ILLINOIS
DEPARTMENT OF TRANSPORTATION

IDEAL ROAD RECONSTRUCTION
DROP BOX DETAILS STRUCTURE NO. 411+07

SCALE: | SHEET 1 OF 1 SHEETS | STA. | TO STA.

F.A.S. RTE.	SECTION	COUNTY	TOTAL SHEETS	SHEET NO.
1084	20-00102-00-PV	CARROLL	217	82

CONTRACT NO. 85761

ILLINOIS | FED. AID PROJECT

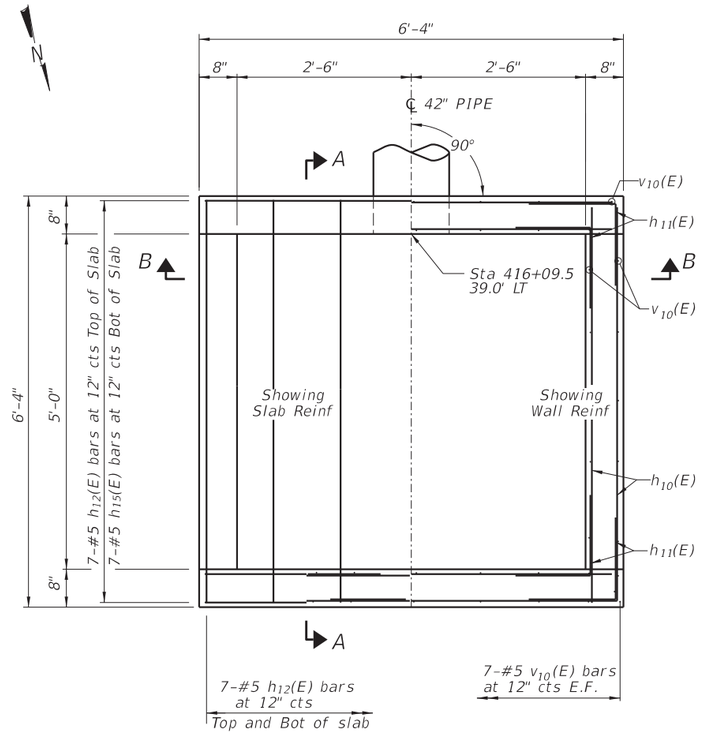

PLAN VIEW - DROP BOX NO 3

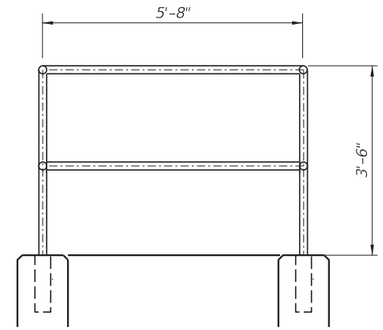

HANDRAIL DETAIL

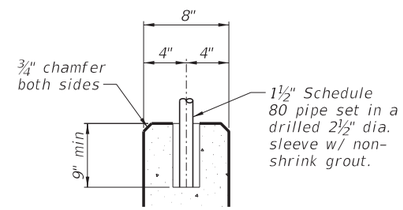

HANDRAIL POST DETAIL

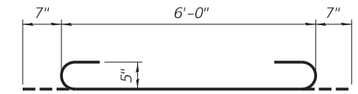

BAR $h_{14}(E)$

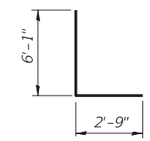

BAR $v_{10}(E)$

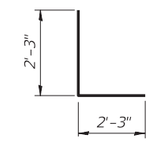

BAR $h_{11}(E)$

BILL OF MATERIAL

	Bar	No.	Size	Length	Shape
	$h_{10}(E)$	48	#4	6'-0"	
	$h_{11}(E)$	56	#4	4'-6"	
	$h_{12}(E)$	21	#4	6'-0"	
	$h_{13}(E)$	8	#5	3'-6"	
	$h_{14}(E)$	7	#5	7'-2"	
	$v_{10}(E)$	50	#5	8'-10"	
	$v_{11}(E)$	6	#4	2'-6"	
*	Pipe Handrail			Foot	22
*	Concrete Structures			Cu. Yd.	4.0
*	Reinforcement Bars, Epoxy Coated			Pound	1000
	Drop Box No. 3			Each	1

*For Information Only

MIN BAR LAP

#4 bar = 2'-0"

DESIGN STRESSES

fy = 60,000 psi
f'c = 3,500 psi

GENERAL NOTES

Reinforcement bars designated (E) shall be epoxy coated.

The Contractor shall be responsible for diverting the water flow from the construction area using a method meeting the approval of the Engineer. Cost included with "Drop Box No. 3".

Exposed edges shall be beveled ¾" .

Structure excavation, backfill, and pipe handrail shall be included in cost of Drop Box No. 3.

Pipe handrail shall be fabricated according to 509.05 and shall be galvanized. Base Plates may be substituted for embedded posts where approved by the Engineer.

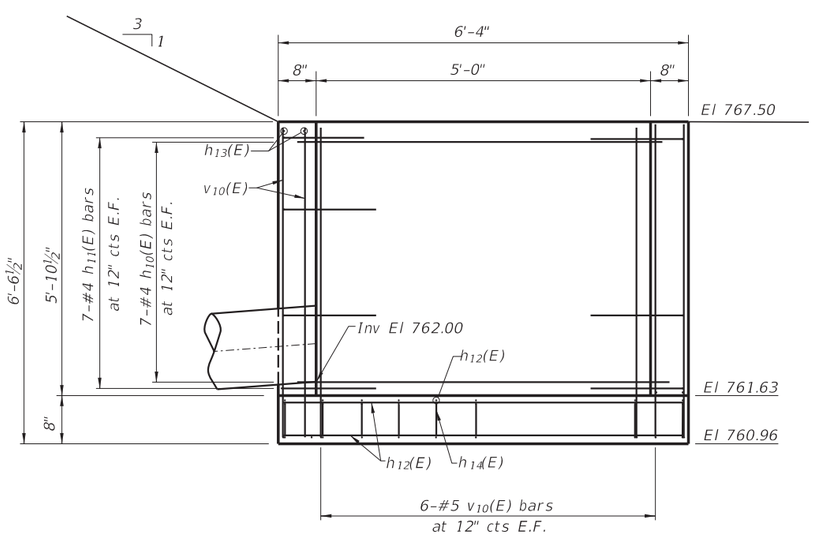

SECTION A-A

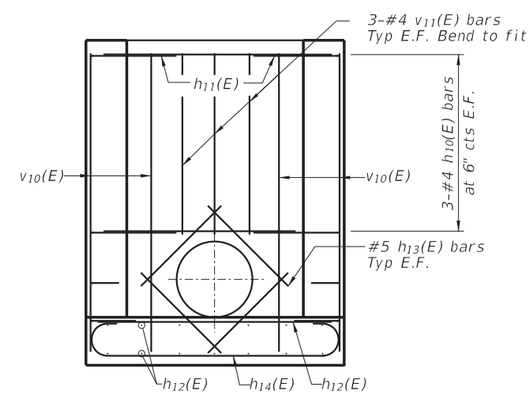

SECTION B-B

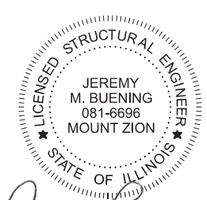

Jeremy Buening 4/17/24
JEREMY M BUENING, P.E., S.E. Date
License Expires 11/30/24

I certify that to the best of my knowledge, information and belief, this bridge/box culvert design is structurally adequate for the design loading shown on the plans. The design is an economical one for the style of structure and complies with requirements of the current 'AASHTO Standard Speci cations for Highway Bridges'.

MODEL: Structure No. 1 Detail
FILE NAME: R:\PJ County\7997 Carroll County - Ideal Road Reconstruction\CADD\CADD Struct\Drop Boxes.dgn

CHASTAIN & ASSOCIATES LLC
CONSULTING ENGINEERS

USER NAME = dwozniarski	DESIGNED -	REVISED -	
	DRAWN -	REVISED -	
PLOT SCALE = 2.00016000 ' / in.	CHECKED -	REVISED -	
PLOT DATE = 4/17/2024	DATE - 04/17/2024	REVISED -	

STATE OF ILLINOIS
DEPARTMENT OF TRANSPORTATION

IDEAL ROAD RECONSTRUCTION
DROP BOX DETAILS STRUCTURE NO. 416+09

SCALE: | SHEET 1 OF 1 SHEETS | STA. | TO STA.

F.A.S. RTE.	SECTION	COUNTY	TOTAL SHEETS	SHEET NO.
1084	20-00102-00-PV	CARROLL	217	83
		CONTRACT NO. 85761		
	ILLINOIS	FED. AID PROJECT		

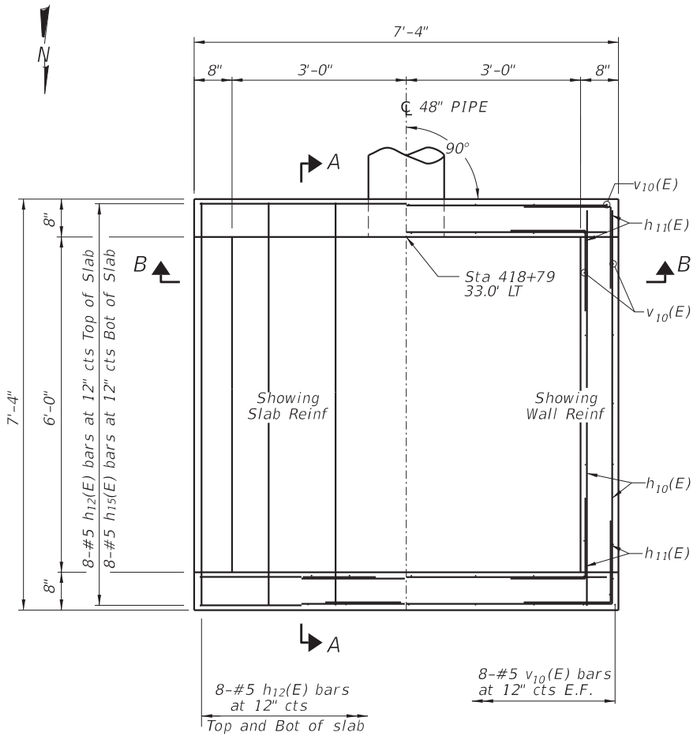

PLAN VIEW - DROP BOX NO 4

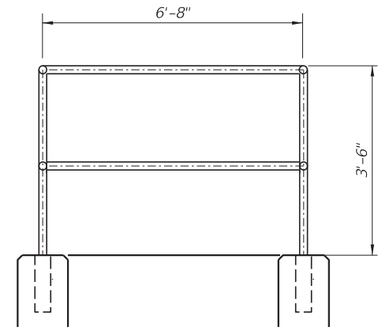

HANDRAIL DETAIL

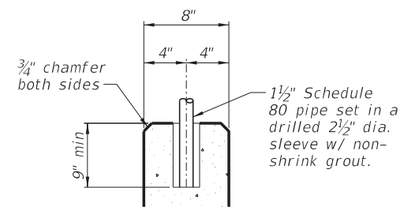

HANDRAIL POST DETAIL

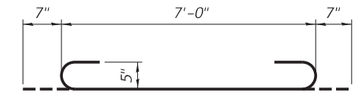

BAR $h_{14}(E)$

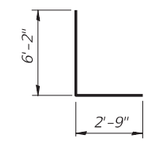

BAR $v_{10}(E)$

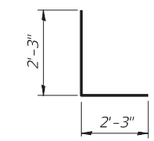

BAR $h_{11}(E)$

BILL OF MATERIAL

	Bar	No.	Size	Length	Shape
	$h_{10}(E)$	48	#4	7'-0"	
	$h_{11}(E)$	56	#4	4'-6"	
	$h_{12}(E)$	24	#4	7'-0"	
	$h_{13}(E)$	16	#5	4'-0"	
	$h_{14}(E)$	8	#5	8'-2"	
	$v_{10}(E)$	52	#5	8'-11"	
*	Pipe Handrail			Foot	26
*	Concrete Structures			Cu. Yd.	4.9
*	Reinforcement Bars, Epoxy Coated			Pound	1110
	Drop Box No. 4			Each	1

*For Information Only

MIN BAR LAP

#4 bar = 2'-0"

DESIGN STRESSES

fy = 60,000 psi
f'c = 3,500 psi

GENERAL NOTES

Reinforcement bars designated (E) shall be epoxy coated.

The Contractor shall be responsible for diverting the water flow from the construction area using a method meeting the approval of the Engineer. Cost included with "Drop Box No. 4".

Exposed edges shall be beveled ¾" .

Structure excavation, backfill, and pipe handrail shall be included in cost of Drop Box No. 4.

Pipe handrail shall be fabricated according to 509.05 and shall be galvanized. Base Plates may be substituted for embedded posts where approved by the Engineer.

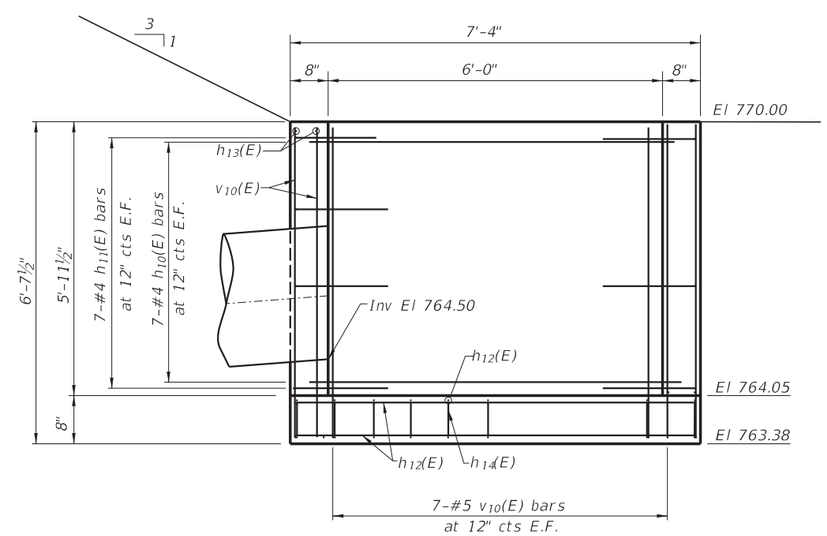

SECTION A-A

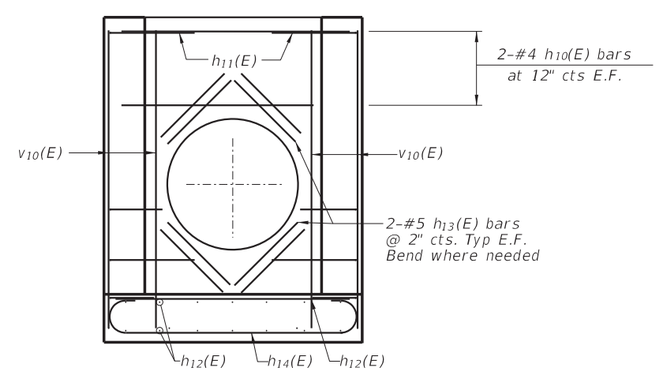

SECTION B-B

Jeremy Buening 4/17/24
JEREMY M BUENING, P.E., S.E. Date
License Expires 11/30/24

I certify that to the best of my knowledge, information and belief, this bridge/box culvert design is structurally adequate for the design loading shown on the plans. The design is an economical one for the style of structure and complies with requirements of the current 'AASHTO Standard Speci cations for Highway Bridges'.

MODEL: Structure No. 1 Detail
FILE NAME: R:\PJ County\7997 Carroll County - Ideal Road Reconstruction\CADD\CADD Struct\Drop Boxes.dgn

CHASTAIN & ASSOCIATES LLC
CONSULTING ENGINEERS

USER NAME = dwozniarski	DESIGNED -	REVISED -	
	DRAWN -	REVISED -	
PLOT SCALE = 2.00008000 ' / in.	CHECKED -	REVISED -	
PLOT DATE = 4/17/2024	DATE - 04/17/2024	REVISED -	

STATE OF ILLINOIS
DEPARTMENT OF TRANSPORTATION

IDEAL ROAD RECONSTRUCTION
DROP BOX DETAILS STRUCTURE NO. 418+79

SCALE: | SHEET 1 OF 1 SHEETS | STA. | TO STA.

F.A.S. RTE.	SECTION	COUNTY	TOTAL SHEETS	SHEET NO.
1084	20-00102-00-PV	CARROLL	217	84

CONTRACT NO. 85761

ILLINOIS | FED. AID PROJECT

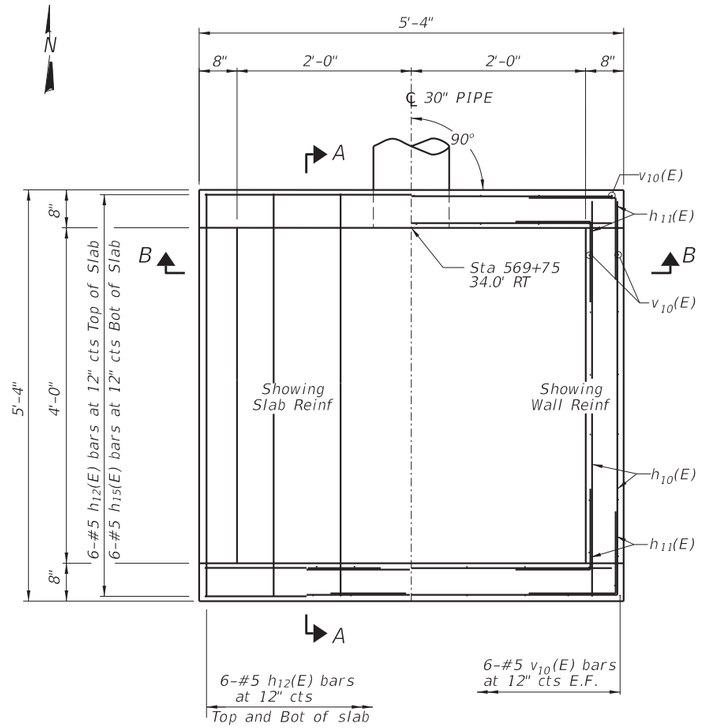

PLAN VIEW - DROP BOX NO 5

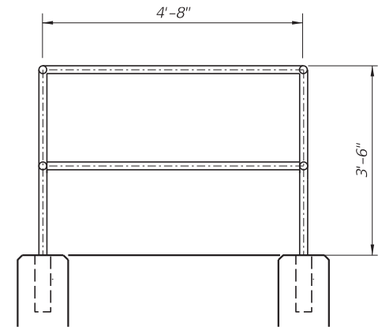

HANDRAIL DETAIL

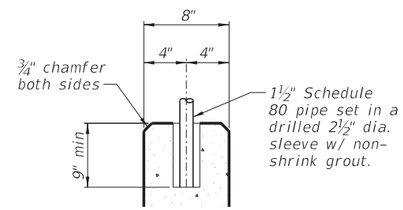

HANDRAIL POST DETAIL

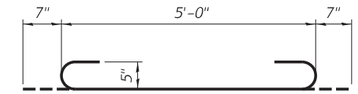

BAR $h_{14}(E)$

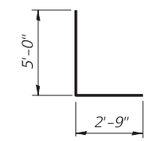

BAR $v_{10}(E)$

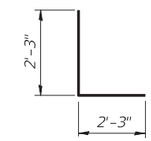

BAR $h_{11}(E)$

BILL OF MATERIAL

	Bar	No.	Size	Length	Shape
	$h_{10}(E)$	42	#4	5'-0"	
	$h_{11}(E)$	48	#4	4'-6"	
	$h_{12}(E)$	18	#4	5'-0"	
	$h_{13}(E)$	8	#5	2'-8"	
	$h_{14}(E)$	6	#5	6'-2"	
	$v_{10}(E)$	40	#5	7'-9"	
	$v_{11}(E)$	6	#4	2'-0"	
*	Pipe Handrail			Foot	18
*	Concrete Structures			Cu. Yd.	2.7
*	Reinforcement Bars, Epoxy Coated			Pound	740
	Drop Box No. 5			Each	1

*For Information Only

MIN BAR LAP

#4 bar = 2'-0"

DESIGN STRESSES

fy = 60,000 psi
f'c = 3,500 psi

GENERAL NOTES

Reinforcement bars designated (E) shall be epoxy coated.

The Contractor shall be responsible for diverting the water flow from the construction area using a method meeting the approval of the Engineer. Cost included with "Drop Box No. 5".

Exposed edges shall be beveled ¾" .

Structure excavation, backfill, and pipe handrail shall be included in cost of Drop Box No. 5.

Pipe handrail shall be fabricated according to 509.05 and shall be galvanized. Base Plates may be substituted for embedded posts where approved by the Engineer.

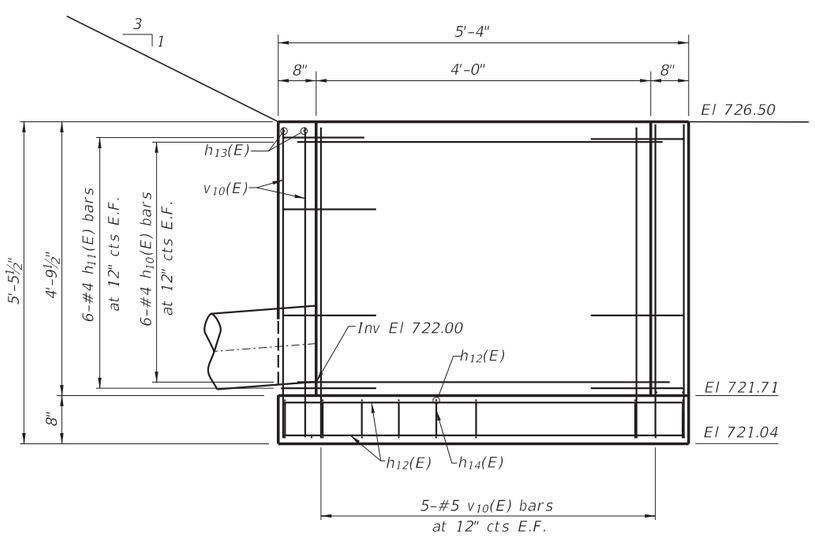

SECTION A-A

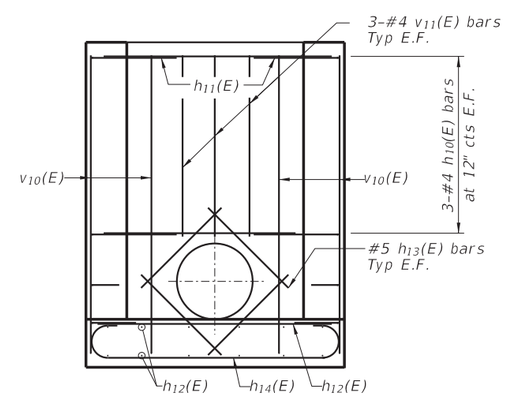

SECTION B-B

LICENSED STRUCTURAL ENGINEER
JEREMY
M. BUENING
081-6696
MOUNT ZION
STATE OF ILLINOIS

Jeremy Buening 4/17/24
JEREMY M BUENING, P.E., S.E. Date
License Expires 11/30/24

I certify that to the best of my knowledge, information and belief, this bridge/box culvert design is structurally adequate for the design loading shown on the plans. The design is an economical one for the style of structure and complies with requirements of the current 'AASHTO Standard Speci cations for Highway Bridges'.

MODEL: Structure No. 1 Detail
FILE NAME: R:\PJ County\7997 Carroll County - Ideal Road Reconstruction\CADD\CADD Struct\Drop Boxes.dgn

CHASTAIN & ASSOCIATES LLC
CONSULTING ENGINEERS

USER NAME = dwozniarski	DESIGNED -	REVISED -	
	DRAWN -	REVISED -	
PLOT SCALE = 2.00000000 ' / in.	CHECKED -	REVISED -	
PLOT DATE = 4/17/2024	DATE - 04/17/2024	REVISED -	

STATE OF ILLINOIS
DEPARTMENT OF TRANSPORTATION

IDEAL ROAD RECONSTRUCTION
DROP BOX DETAILS STRUCTURE NO. 569+75

SCALE: | SHEET 1 OF 1 SHEETS | STA. | TO STA.

F.A.S. RTE.	SECTION	COUNTY	TOTAL SHEETS	SHEET NO.
1084	20-00102-00-PV	CARROLL	217	85
		CONTRACT NO. 85761		
	ILLINOIS	FED. AID PROJECT		

85761

HOT–MIX ASPHALT APPROACHES AND MAILBOX RETURNS

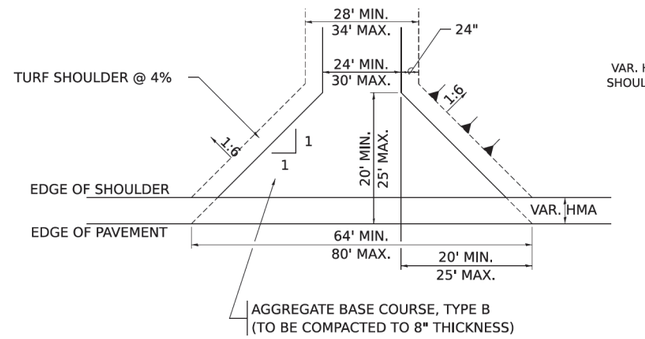

FIELD ENTRANCE

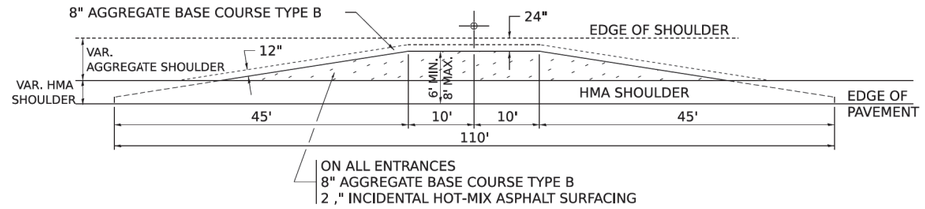

MAILBOX TURNOUT

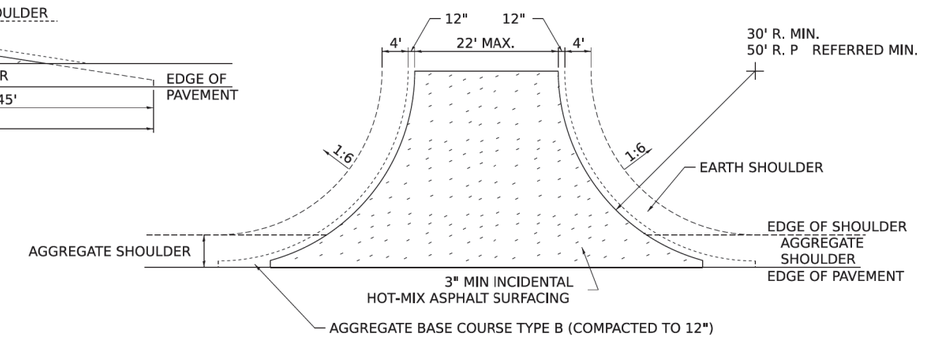

SIDE ROAD RETURN/EARTH SHOULDER

NOTE

1. TURNOUTS ARE TO BE CONSTRUCTED ON THE APPROACH SIDE OF ALL PE & CE REGARDLESS IF A MAILBOX IS PRESENT.
2. ALL PE & CE ARE TO BE SURFACED TO RIGHT OF WAY LINE. AREA BEHIND RIGHT OF WAY SHALL MATCH EXISTING SURFACE.
3. ALL PE & CE TO BE CONSTRUCTED WITH AN 8" AGGREGATE BASE COURSE, TYPE B AND WITH A 2 ¼" INCIDENTAL HOT-MIX ASPHALT SURFACING, UNLESS OTHERWISE NOTED.
4. FE ARE TO BE AGGREGATE TO RIGHT OF WAY OR TOUCH DOWN, WHICH EVER IS GREATEST.
5. EXCAVATION REQUIRED FOR PLACEMENT OF AGGREGATE BASE COURSE SHALL BE INCLUDED IN THE COST OF THE AGGREGATE BASE COURSE.
6. ON ENTRANCES THE CONTRACTOR HAS THE OPTION OF USING RADIUS RETURNS. USE RADII OF 20' TO 60'.
7. SIDE ROADS SHALL HAVE 3" INCIDENTAL PLACED IN TWO 1½" LIFTS.

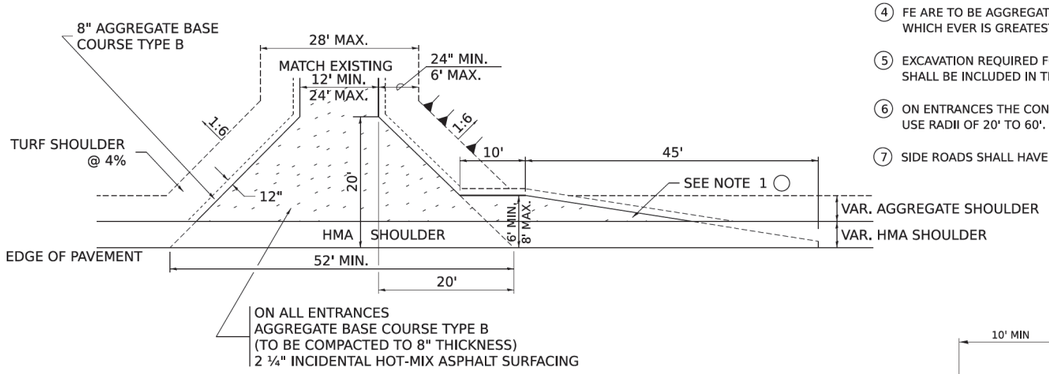

PRIVATE ENTRANCE

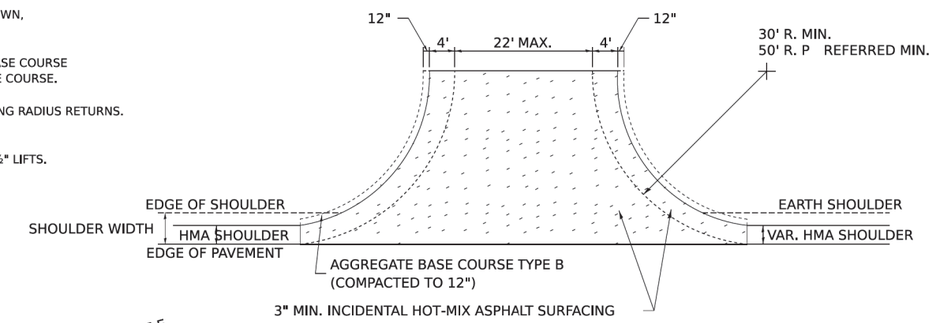

SIDE ROAD RETURN/HMA SHOULDER

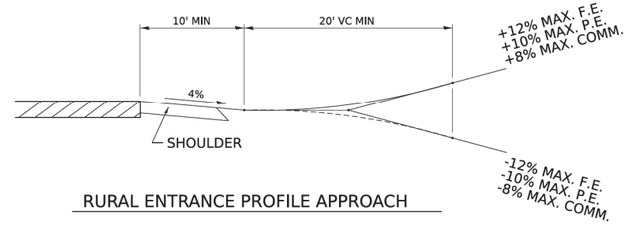

RURAL ENTRANCE PROFILE APPROACH

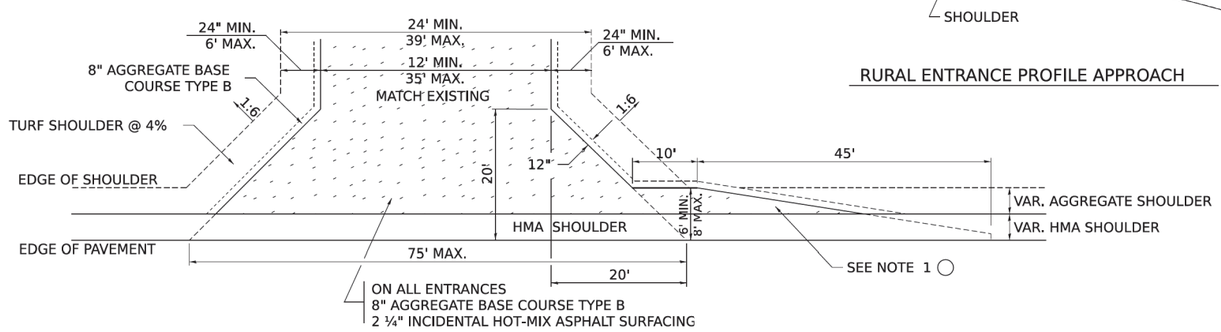

COMMERCIAL ENTRANCE

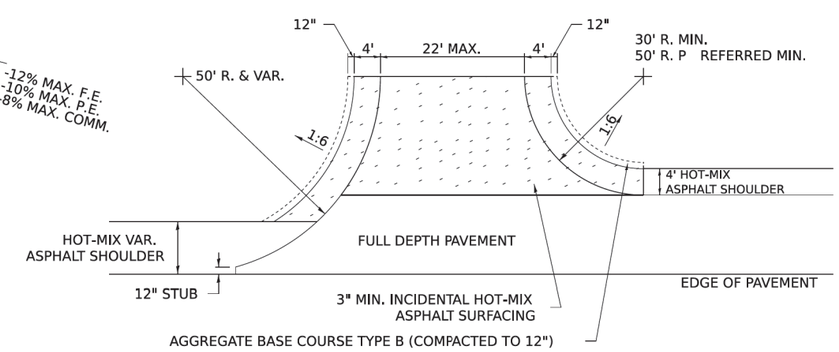

SIDE ROAD RETURN WITH RIGHT TURN LANE

USER NAME = IDOT/District 2	DESIGNED -	REVISED - 8-03-17	STATE OF ILLINOIS DEPARTMENT OF TRANSPORTATION	REGION 2 / DISTRICT 2 STANDARD	F.A. RTE.	SECTION	COUNTY	TOTAL SHEETS	SHEET NO.
	DRAWN -	REVISED - 1-13-17							
PLOT SCALE = 0.083 ' / in.	CHECKED -	REVISED - 6-27-14					CONTRACT NO.		
PLOT DATE = 9/20/2023	DATE -	REVISED - 8-27-13		SCALE: SHEET OF SHEETS STA. TO STA.		ILLINOIS	FED. AID PROJECT		

HOT–MIX ASPHALT APPROACHES AND MAILBOX RETURNS 20.1

CHASTAIN & ASSOCIATES LLC CONSULTING ENGINEERS	USER NAME = dwozniarski	DESIGNED -	REVISED -	STATE OF ILLINOIS DEPARTMENT OF TRANSPORTATION	HOT–MIX ASPHALT APPROACHES AND MAILBOX RETURNS	F.A.S. RTE.	SECTION	COUNTY	TOTAL SHEETS / SHEET NO.
		DRAWN -	REVISED -			1084	20-00102-00-PV	CARROLL	217 / 86
	PLOT SCALE = 39.9984 ' / in.	CHECKED -	REVISED -					CONTRACT NO. 85761	
	PLOT DATE = 6/14/2024	DATE - 04/17/2024	REVISED -		SCALE: SHEET 1 OF 8 SHEETS STA. TO STA.		ILLINOIS	FED. AID PROJECT	

MODEL: Default
FILE NAME: R:\PI County\7997 Carroll County - Hoel Road Reconstruction\CADD\CADD Civil\Sheets\7997-sht-District Detail.dgn

CONCRETE COLLARS FOR PIPE OR BOX CULVERT EXTENSIONS

85761

Bill of Materials

h bar	U bar dimensions				U_1 bar dimensions				REINF. BARS	EXPANSION BOLTS ¾"	CONCRETE COLLAR
Quantity	X	Y	Length	Quantity	X	Z	Length	Quantity	LBS	EACH	Cu. Yds.
12	35	37.5	110	2	35	37.5	110	2	36.52	N/A	0.59
12	35	37.5	110	2	35	37.5	110	2	36.52	N/A	0.59
								Total	73.04		1.18

All h bars 18 Long

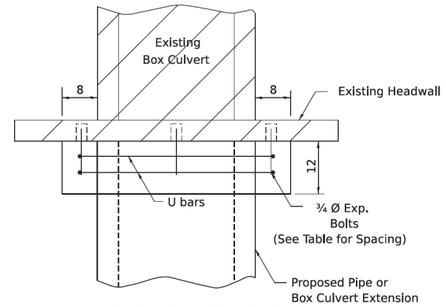

PLAN OF CULVERT WITH STRAIGHT HEADWALL

General Notes

Concrete Collars shall be constructed of Class SI Concrete in accordance with Section 503 of the Standard Specifications

Reinforcement bars shall conform to Section 508 of the Standard Specifications.

Expansion bolts shall be 3/4 Ø hooked bolts and shall conform to Section 540 of the Standard Specifications.

The concrete will be paid for at the contract unit price per cubic yard for CONCRETE COLLAR. Reinforcement will be paid for at the contract unit price per pound for REINFORCEMENT BARS. Expansion Bolts, when required, will be paid for at the contract unit price each for EXPANSION BOLTS ¾ inch, which price shall include furnishing, drilling holes, and installing the expansion bolts complete in place. These bolts shall extend at least 9 inches into the new concrete.

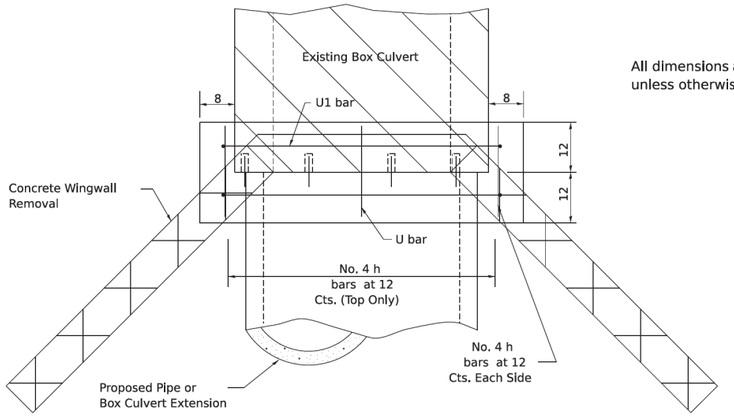

PLAN OF CULVERT WITH ANGLED WING WALLS

All dimensions are in inches unless otherwise noted.

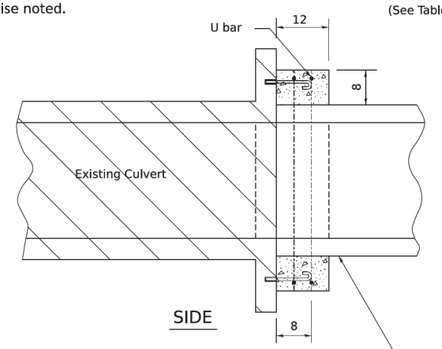

SIDE

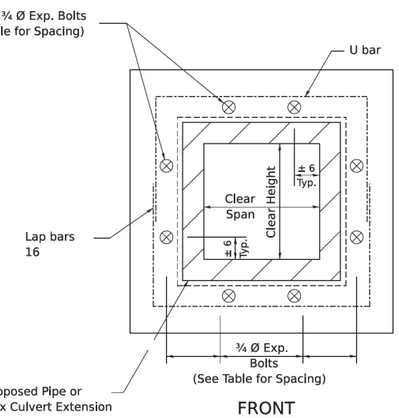

FRONT

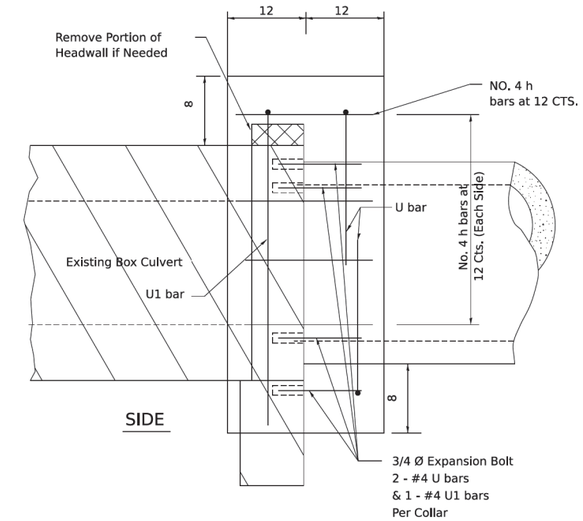

SIDE

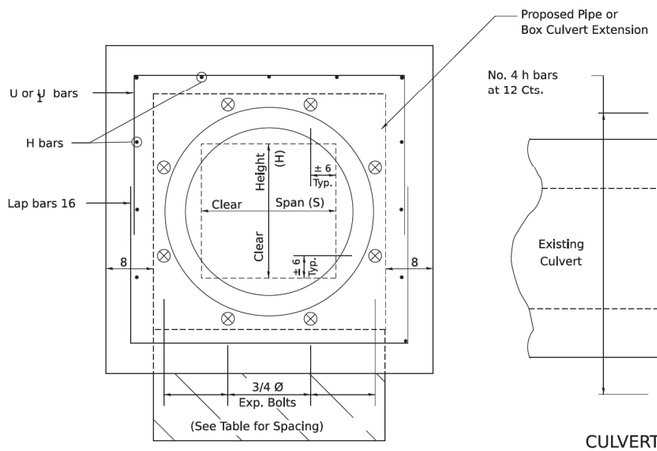

FRONT

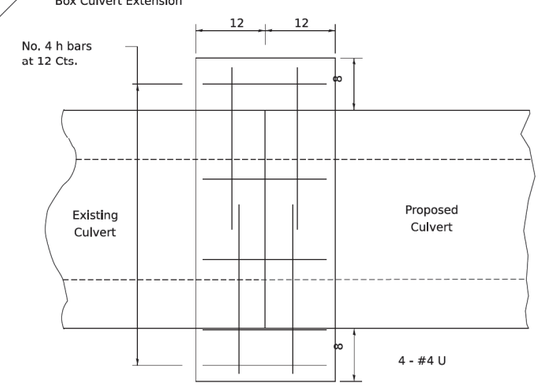

CULVERT CONNECTION WITHOUT EXISTING HEADWALL

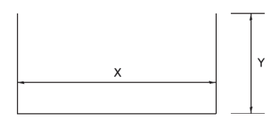

(#4) U bar

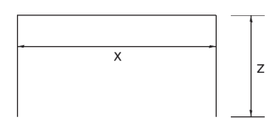

(#4) U_1 bar

PLACEMENT DETAILS FOR EXPANSION BOLTS

H or S	NUMBER OF EXPANSION BOLTS REQUIRED PER SIDE			
	EXTENSIONS ≤ 15'		EXTENSIONS > 15'	
	NUMBER *	SPACING	NUMBER *	SPACING
24	**	**	**	**
30	2	18	2	18
36	2	24	2	24
48	3	18	3	18
60	4	16	3	24
72	5	15	4	20
84	5	18	4	24
96	6	17	5	21
108	6	19	5	24
120	7	18	6	21
132	8	17	6	24
144	8	19	7	22

* Expansion bolts based on non-skewed culverts
** Minimum one expansion bolt at each corner

Example:
6' x 4' box culvert to be extended 18' at one end only.

From table find
6' side requires 4 - ¾" Ø expansion bolts at 20" cts.
4' side requires 3 - ¾" Ø expansion bolts at 18" cts.

Total Number required
(4+3)2 = 14 - ¾" Ø expansion bolts.

USER NAME = IDOT/District 2	DESIGNED -	REVISED - 1-18-17	STATE OF ILLINOIS DEPARTMENT OF TRANSPORTATION
	DRAWN -	REVISED - 1-05-16	
PLOT SCALE = 0.083 ' / in.	CHECKED -	REVISED - 6-27-14	
PLOT DATE = 9/20/2023	DATE -	REVISED - 10-17-11	

REGION 2 / DISTRICT 2 STANDARD

SCALE: SHEET OF SHEETS STA. TO STA.

F.A. RTE.	SECTION	COUNTY	TOTAL SHEETS	SHEET NO.
		CONTRACT NO.		
		ILLINOIS FED. AID PROJECT		

CONCRETE COLLARS FOR PIPE OR BOX CULVERT EXTENSIONS 33.1

CHASTAIN & ASSOCIATES LLC
CONSULTING ENGINEERS

USER NAME = dwozniarski	DESIGNED -	REVISED -
	DRAWN -	REVISED -
PLOT SCALE = 39.9984 ' / in.	CHECKED -	REVISED -
PLOT DATE = 6/14/2024	DATE - 04/17/2024	REVISED -

STATE OF ILLINOIS
DEPARTMENT OF TRANSPORTATION

IDEAL ROAD RECONSTRUCTION
CONCRETE COLLARS FOR PIPE OR BOX CULVERT EXTENSIONS

SCALE: SHEET 2 OF 8 SHEETS STA. TO STA.

F.A.S. RTE.	SECTION	COUNTY	TOTAL SHEETS	SHEET NO.
1084	20-00102-00-PV	CARROLL	217	87
		CONTRACT NO. 85761		
		ILLINOIS FED. AID PROJECT		

MODEL: Default
FILE NAME: R:\pf_County\7997 Carroll County - Ideal Road Reconstruction\CADD\CADD Civil\Sheets\7997-sht-District Detail.dgn

85761

TRAFFIC CONTROL FOR ROAD CLOSURE

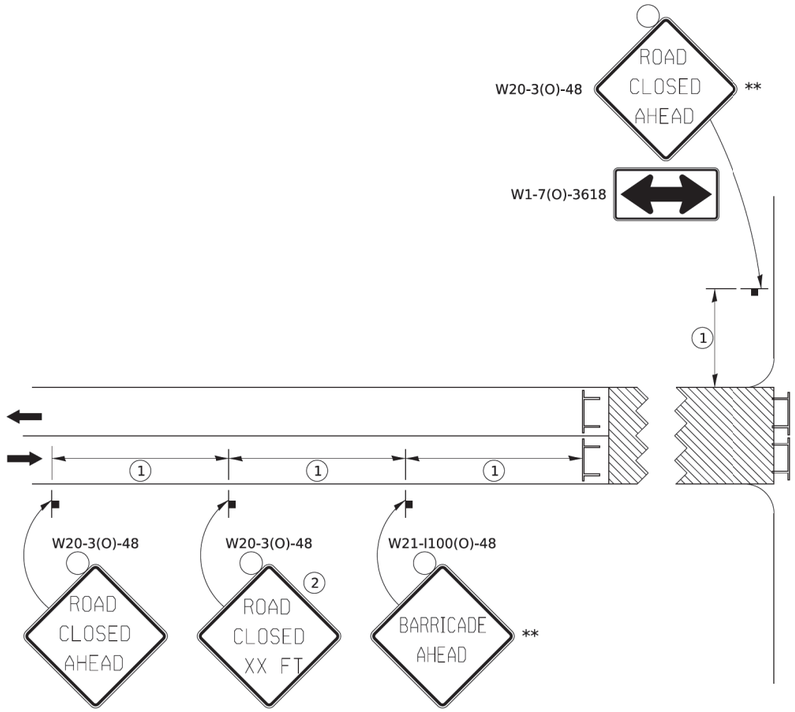

CONDITION II

Minor
Sideroad Closure

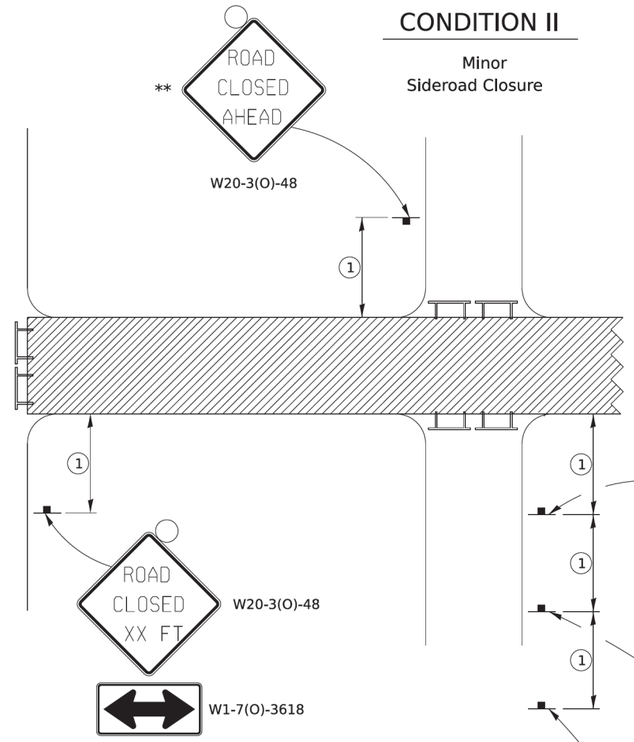

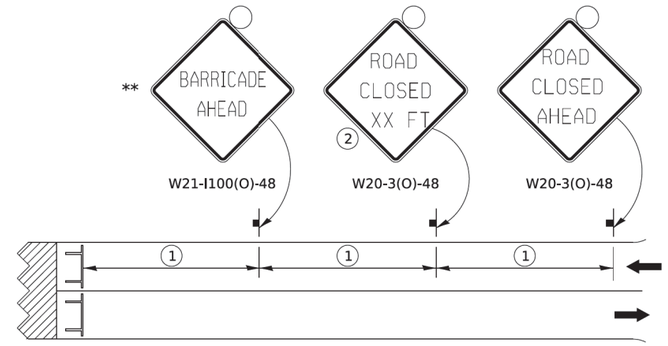

SYMBOLS

- Work area
- Type III Barricade with Flashers
- Sign with flashing light

CONDITION I

Major
Sideroad Closure

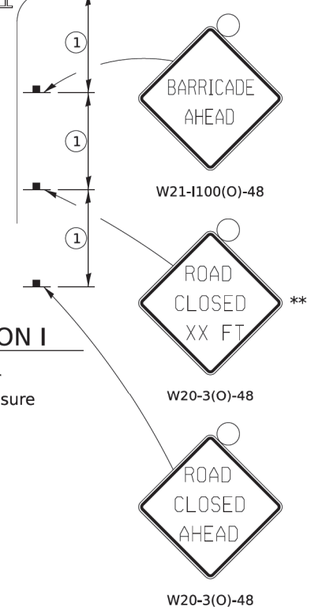

(1)

SIGN SPACING TABLE	
Posted Speed	Sign Spacing
45 MPH and above	500'
Below 45 MPH	250'

(2)

SIGN LEGEND	
Posted Speed Limit	Distance
45 MPH and above	1000'
Below 45 MPH	500'

ROAD CLOSED TO THRU TRAFFIC BARRICADE SET UP

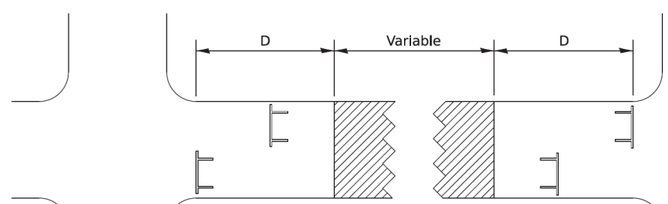

Type III Barricades and R11-4-4830 signs shall be as shown in "Road Closed To Thru Traffic" detail on Highway Standard 701901. If the distance "D" exceeds 2000' an additional set of barricades and R11-4-4830 shall be placed at each end of the work area.

GENERAL NOTES

Longitudinal dimensions may be adjusted to fit field conditions.

Side roads requiring all three signs as shown in CONDITION I (Major Sideroad Closure), shall be listed in the special provision.

** Where local access is to be maintained, barricades are to be set up as shown in "Road Closed To Thru Traffic". Type III Barricades and R11-2-4830 signs shall be as shown in "Road Closed To All Traffic" detail on Highway Standard 701901.

All dimensions are in inches unless otherwise shown.

TYPICAL APPLICATION FOR ROAD CLOSURE

USER NAME = IDOT/District 2	DESIGNED -	REVISED - 8-03-17	STATE OF ILLINOIS DEPARTMENT OF TRANSPORTATION	REGION 2 / DISTRICT 2 STANDARD
	DRAWN -	REVISED - 1-05-16		
PLOT SCALE = 0.083 ' / in.	CHECKED -	REVISED - 8-27-13		
PLOT DATE = 9/20/2023	DATE -	REVISED - 10-17-11		SCALE: SHEET OF SHEETS STA. TO STA.

F.A. RTE.	SECTION	COUNTY	TOTAL SHEETS	SHEET NO.
		CONTRACT NO.		
		ILLINOIS	FED. AID PROJECT	

TRAFFIC CONTROL FOR ROAD CLOSURE 40.1

CHASTAIN & ASSOCIATES LLC
CONSULTING ENGINEERS

USER NAME = dwozniarski	DESIGNED -	REVISED -	STATE OF ILLINOIS DEPARTMENT OF TRANSPORTATION
	DRAWN -	REVISED -	
PLOT SCALE = 39.9984 ' / in.	CHECKED -	REVISED -	
PLOT DATE = 6/14/2024	DATE - 04/17/2024	REVISED -	

IDEAL ROAD RECONSTRUCTION
TRAFFIC CONTROL FOR ROAD CLOSURE

SCALE: SHEET 4 OF 8 SHEETS STA. TO STA.

F.A.S. RTE.	SECTION	COUNTY	TOTAL SHEETS	SHEET NO.
1084	20-00102-00-PV	CARROLL	217	88
		CONTRACT NO. 85761		
		ILLINOIS	FED. AID PROJECT	

MODEL: Default
FILE NAME: R:\PS County\7997 Carroll County - Ideal Road Reconstruction\CADD\CADD Civil\Sheets\7997-sht-District Detail-dgn

85761

TYPICAL PAVEMENT MARKINGS

TYPICAL PAVEMENT MARKING FOR FLUSH MEDIAN AT LEFT TURN LANE

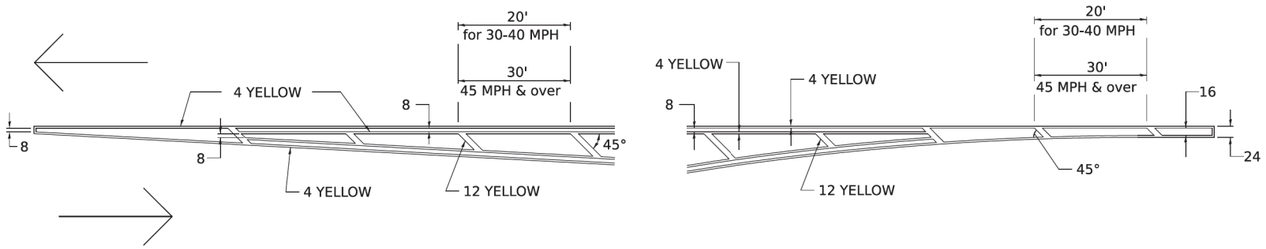

MEDIAN PAVEMENT MARKING

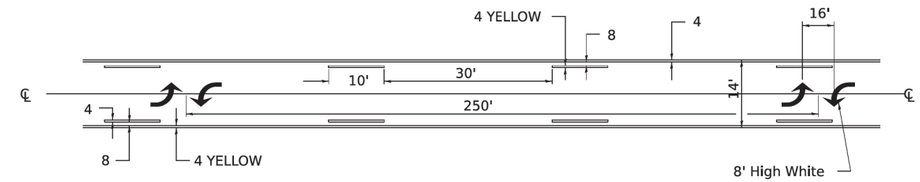

** ALL DIMENSIONS ARE IN INCHES UNLESS OTHERWISE NOTED.

TYPICAL ISLAND OFFSET SHOULDER WIDTH

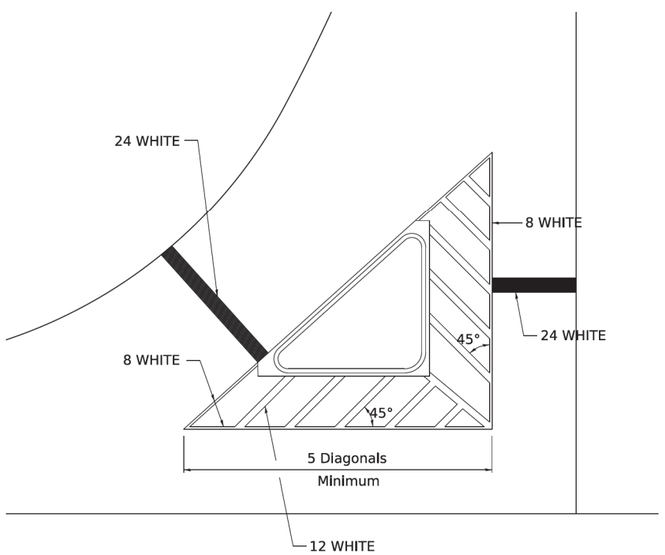

TYPICAL MARKING FOR PAINTED ISLANDS

NOTE:
* 45° TO LOCAL TAN.

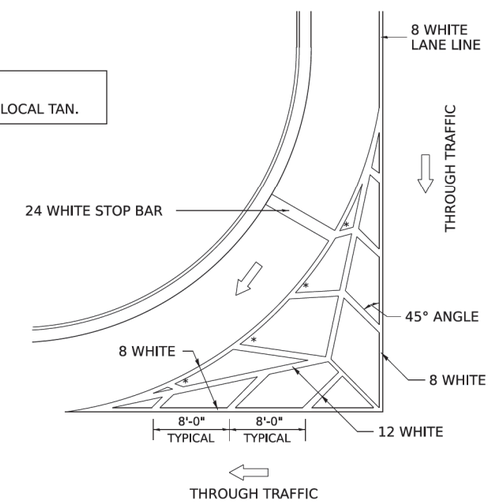

STANDARD CROSSWALK MARKING

See Schedules for Locations

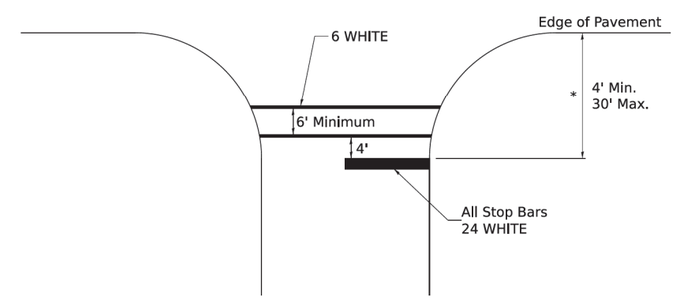

* Distance to the nearest edge of the intersecting roadway in the absence of a marked crosswalk.

PLOT DATE = 9/20/2023

USER NAME = IDOT/District 2	DESIGNED -	REVISED - 6-27-14	STATE OF ILLINOIS DEPARTMENT OF TRANSPORTATION	REGION 2 / DISTRICT 2 STANDARD	F.A. RTE.	SECTION	COUNTY	TOTAL SHEETS	SHEET NO.
	DRAWN -	REVISED - 3-05-12							
PLOT SCALE = 0.083 ' / In.	CHECKED -	REVISED -					CONTRACT NO.		
PLOT DATE = 9/20/2023	DATE -	REVISED -		SCALE: SHEET OF SHEETS STA. TO STA.			ILLINOIS FED. AID PROJECT		

TYPICAL PAVEMENT MARKINGS SHEET 1 OF 4 41.1

MODEL: Default
FILE NAME: R:\Pat County\7997 Carroll County - Ideal Road Reconstruction\CADD\CADD_Civil\Sheets\7997-sht-District Details.dgn

CHASTAIN & ASSOCIATES LLC
CONSULTING ENGINEERS

USER NAME = dwozniarski	DESIGNED -	REVISED -	STATE OF ILLINOIS DEPARTMENT OF TRANSPORTATION	IDEAL ROAD RECONSTRUCTION TYPICAL PAVEMENT MARKINGS	F.A.S. RTE.	SECTION	COUNTY	TOTAL SHEETS	SHEET NO.
	DRAWN -	REVISED -			1084	20-00102-00-PV	CARROLL	217	89
PLOT SCALE = 39.9984 ' / in.	CHECKED -	REVISED -					CONTRACT NO. 85761		
PLOT DATE = 6/14/2024	DATE - 04/17/2024	REVISED -		SCALE: SHEET 5 OF 8 SHEETS STA. TO STA.			ILLINOIS FED. AID PROJECT		

85761

TYPICAL PAVEMENT MARKINGS

ARROW LAYOUT

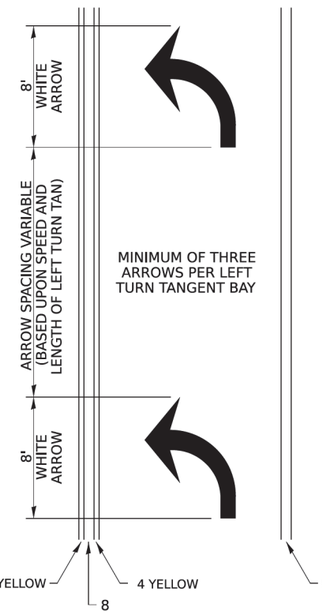

SYMBOLS

- ONE-WAY AMBER MARKER
- ONE-WAY CRYSTAL MARKER
- TWO-WAY AMBER MARKER

ALL DIMENSIONS ARE IN INCHES UNLESS OTHERWISE NOTED.

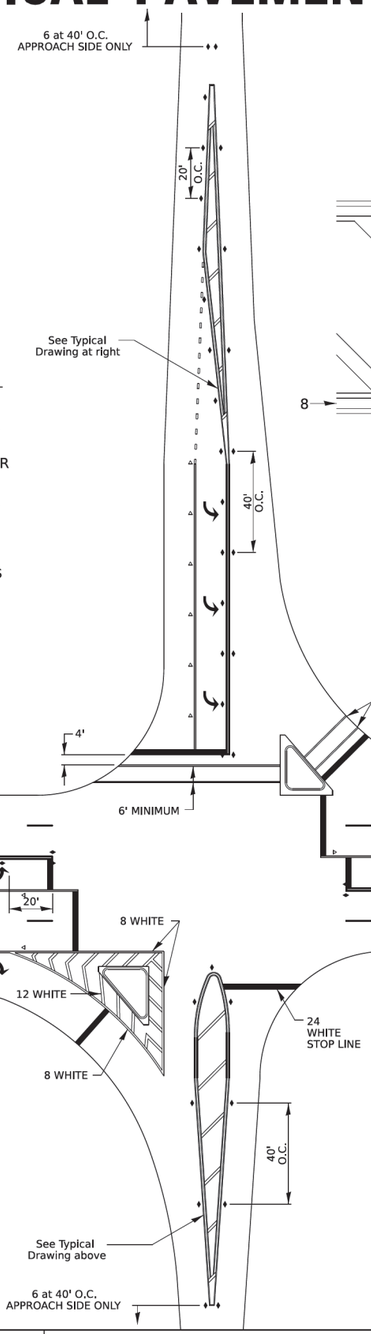

TYPICAL PAVEMENT MARKING FOR FLUSH MEDIAN

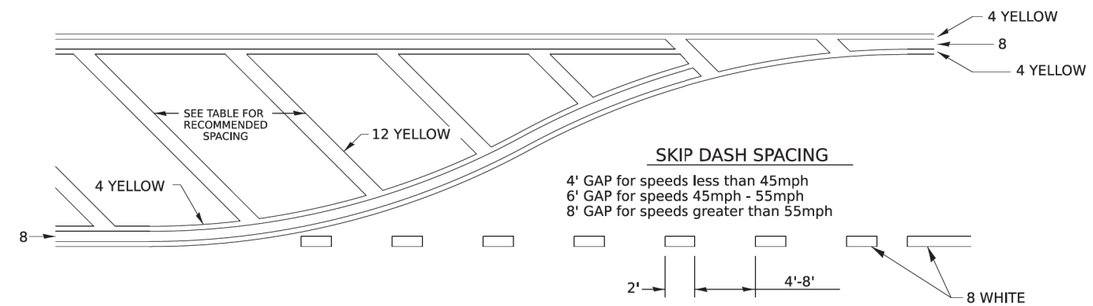

SKIP DASH SPACING

4' GAP for speeds less than 45mph
6' GAP for speeds 45mph - 55mph
8' GAP for speeds greater than 55mph

RECOMMENDED SPACING BETWEEN DIAGONALS (IN FEET)

Speed Limit Range	Continuous Median Area	Intersection Channelization	Objects (Islands)
less than 30MPH	50'	15'	10'
30-40MPH	75'	20'	15'
45MPH & over	75'	30'	20'

NOTE: if the spacing recommended in the Table does not permit at least five diagonal lines in the area being marked, the spacing from the next lowest speed range should be used. The recommended spacing is measured parallel to the pavement center line.

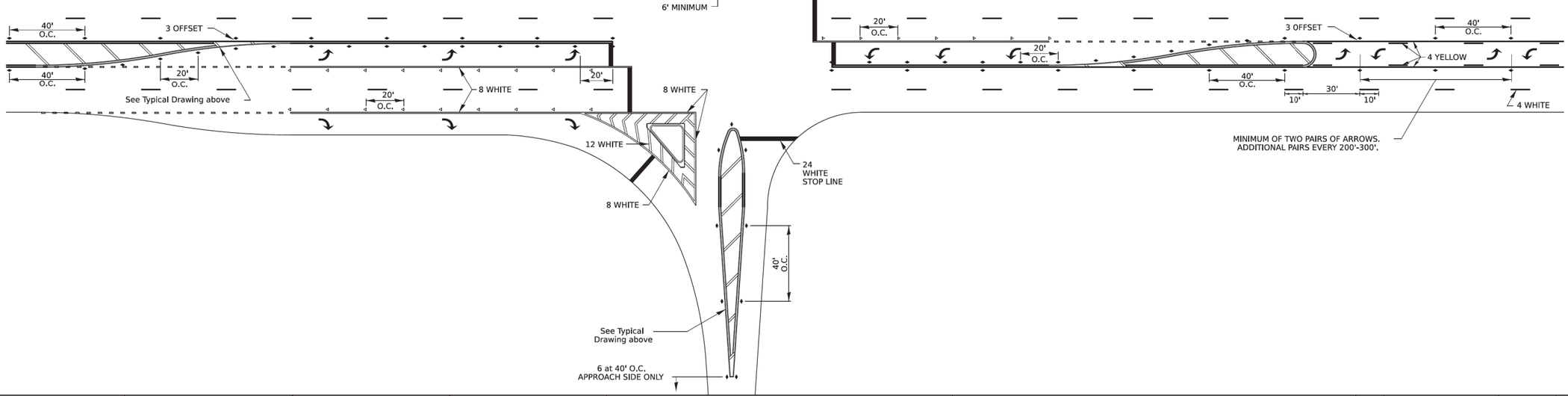

USER NAME = IDOT/District 2	DESIGNED -	REVISED - 6-27-14	STATE OF ILLINOIS DEPARTMENT OF TRANSPORTATION	REGION 2 / DISTRICT 2 STANDARD	F.A. RTE.	SECTION	COUNTY / TOTAL SHEETS / SHEET NO.
	DRAWN -	REVISED - 3-05-12					CONTRACT NO.
PLOT SCALE = 0.083 ' / in.	CHECKED -	REVISED -					ILLINOIS / FED. AID PROJECT
PLOT DATE = 9/20/2023	DATE -	REVISED -		SCALE: / SHEET OF SHEETS / STA. / TO STA.			

TYPICAL PAVEMENT MARKINGS SHEET 2 OF 4 41.1

MODEL: Default
FILE NAME: R:\04_County\7997 Carroll County - Ideal Road Reconstruction\CADD\CADD_CivilSheets\7997-sht-District Detail-.dgn

CHASTAIN & ASSOCIATES LLC
CONSULTING ENGINEERS

USER NAME = dwozniarski	DESIGNED -	REVISED -	STATE OF ILLINOIS DEPARTMENT OF TRANSPORTATION	IDEAL ROAD RECONSTRUCTION TYPICAL PAVEMENT MARKINGS	F.A.S. RTE.	SECTION	COUNTY / TOTAL SHEETS / SHEET NO.
	DRAWN -	REVISED -			1084	20-00102-00-PV	CARROLL / 217 / 90
PLOT SCALE = 39.9984 ' / in.	CHECKED -	REVISED -					CONTRACT NO. 85761
PLOT DATE = 6/14/2024	DATE - 04/17/2024	REVISED -		SCALE: / SHEET 6 OF 8 SHEETS / STA. / TO STA.			ILLINOIS / FED. AID PROJECT

TYPICAL PAVEMENT MARKINGS

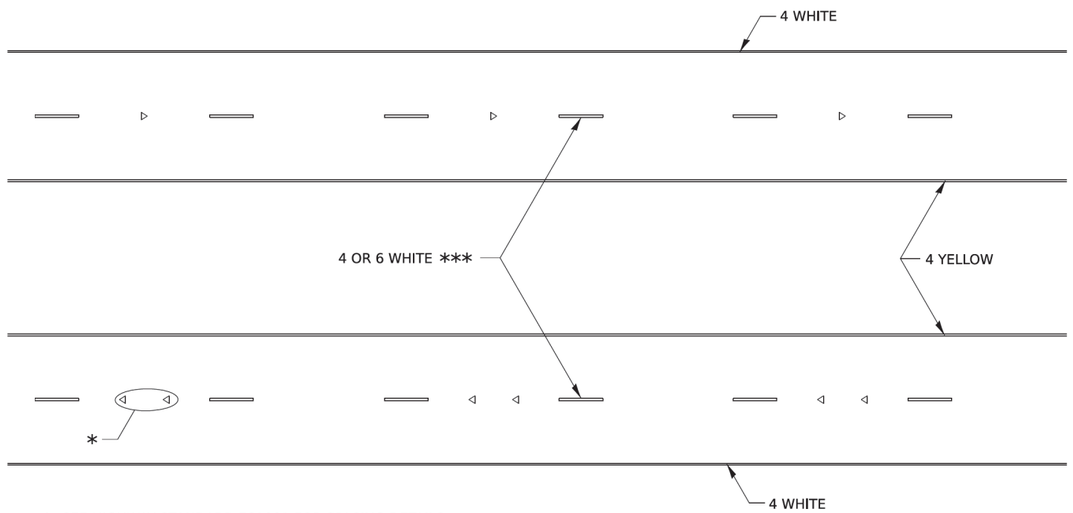

* SEE HIGHWAY STANDARD 781001 FOR SPACING DETAILS.
USE DOUBLE MARKERS WHEN ADT ≥ 20,000.

MULTI–LANE / DIVIDED

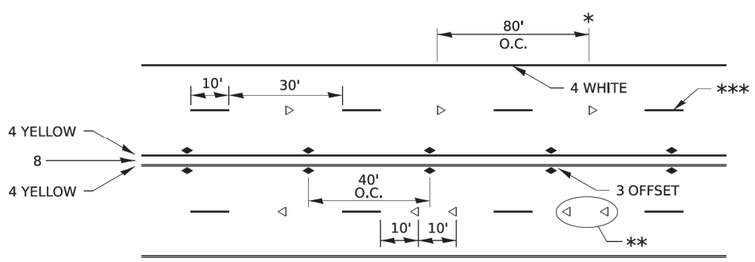

* REDUCE TO 40' O.C. ON CURVES WHERE ADVISORY SPEEDS ARE 10 MPH LOWER THAN POSTED SPEEDS.

** USE DOUBLE MARKERS WHEN ADT ≥ 20,000

*** CENTERLINE SKIP DASH PAVEMENT MARKING SPEED LIMIT LESS THAN 40 MPH USE 4" LINE. SPEED LIMIT 40 MPH AND OVER USE 6" LINE.

MULTI–LANE / UNDIVIDED & ONE WAY

(FOR MULTI-LANE UNDIVIDED HIGHWAYS USE THIS DETAIL NOT HIGHWAY STANDARD 781001)

TYPICAL PARKING SPACING

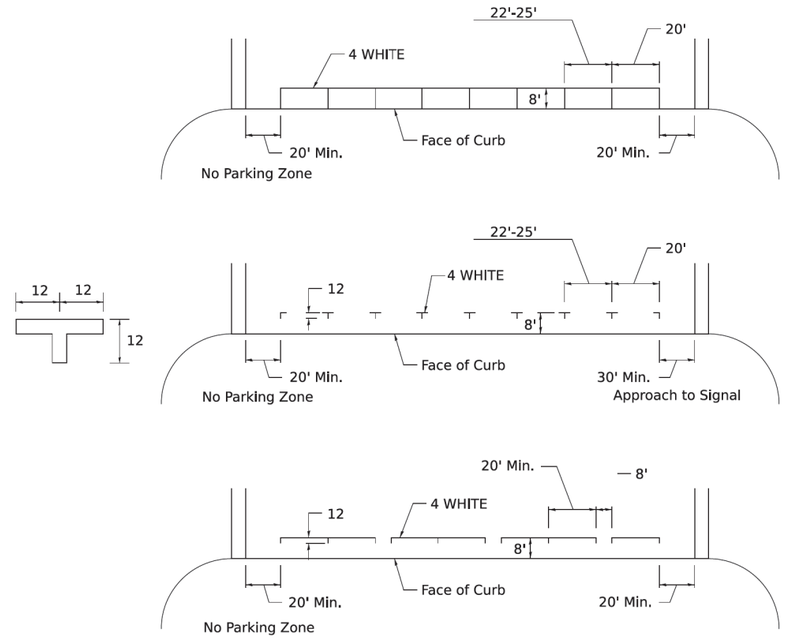

TYPICAL PAVEMENT MARKING FOR TWO LANE SECTION – NO PASSING ZONES

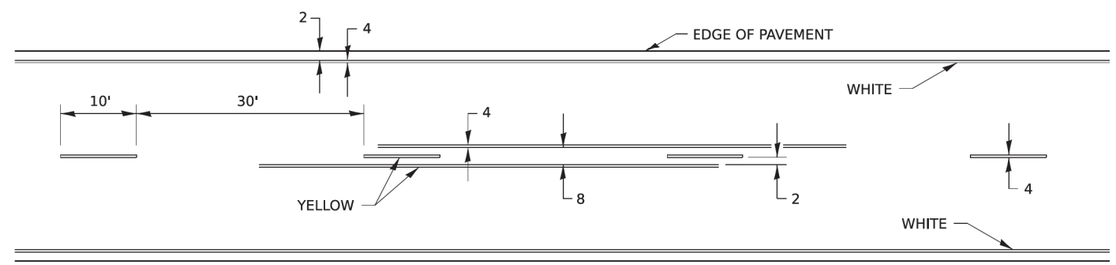

PLOT DATE = 9/20/2023

USER NAME = IDOT/District 2	DESIGNED -	REVISED - 6-27-14	STATE OF ILLINOIS DEPARTMENT OF TRANSPORTATION
	DRAWN -	REVISED - 8-27-13	REGION 2 / DISTRICT 2 STANDARD
PLOT SCALE = 0.083 ' / in.	CHECKED -	REVISED - 11-28-12	
PLOT DATE = 9/20/2023	DATE -	REVISED -	SCALE: SHEET OF SHEETS STA. TO STA.

F.A. RTE.	SECTION	COUNTY	TOTAL SHEETS	SHEET NO.
		CONTRACT NO.		
		ILLINOIS	FED. AID PROJECT	

TYPICAL PAVEMENT MARKINGS SHEET 3 OF 4 41.1

MODEL: Default
FILE NAME: R:\PI County\7997 Carroll County - Ideal Road Reconstruction\CADD\CADD_Civil\Sheets\7997-sht-District Details.dgn

CHASTAIN & ASSOCIATES LLC
CONSULTING ENGINEERS

USER NAME = dwozniarski	DESIGNED -	REVISED -	STATE OF ILLINOIS DEPARTMENT OF TRANSPORTATION
	DRAWN -	REVISED -	IDEAL ROAD RECONSTRUCTION
PLOT SCALE = 39.9984 ' / in.	CHECKED -	REVISED -	TYPICAL PAVEMENT MARKINGS
PLOT DATE = 6/14/2024	DATE - 04/17/2024	REVISED -	SCALE: SHEET 7 OF 8 SHEETS STA. TO STA.

F.A.S. RTE.	SECTION	COUNTY	TOTAL SHEETS	SHEET NO.
1084	20-00102-00-PV	CARROLL	217	91
		CONTRACT NO. 85761		
		ILLINOIS	FED. AID PROJECT	

85761

TYPICAL PAVEMENT MARKINGS

** 6" WHITE ON INTERSTATES, WHERE THE SPPED LIMIT IS 65 MPH, OR WHEN DIRECTED BY THE ENGINEER.

4" WIDE AT ALL OTHER LOCATIONS.

NOTE: GORE HATCHING PLACED ONLY WHEN SCHEDULED IN THE PLANS

EXIT RAMP

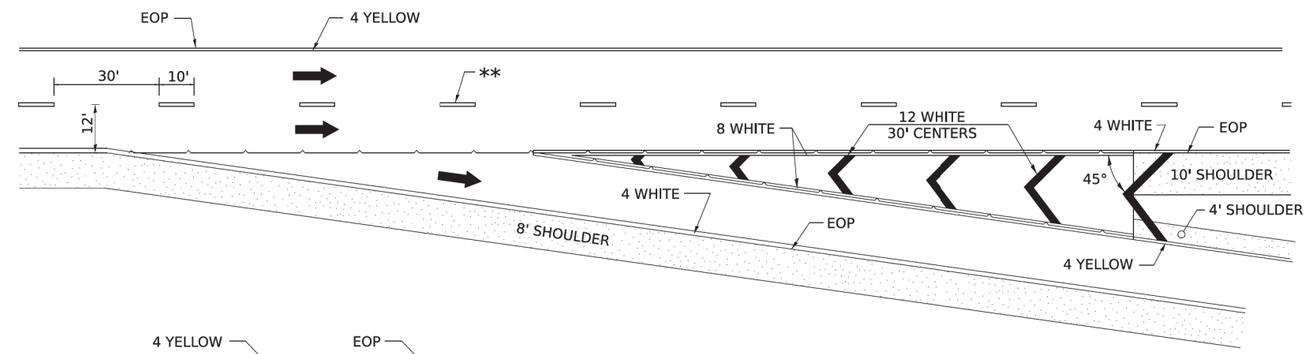

ENTRANCE RAMP

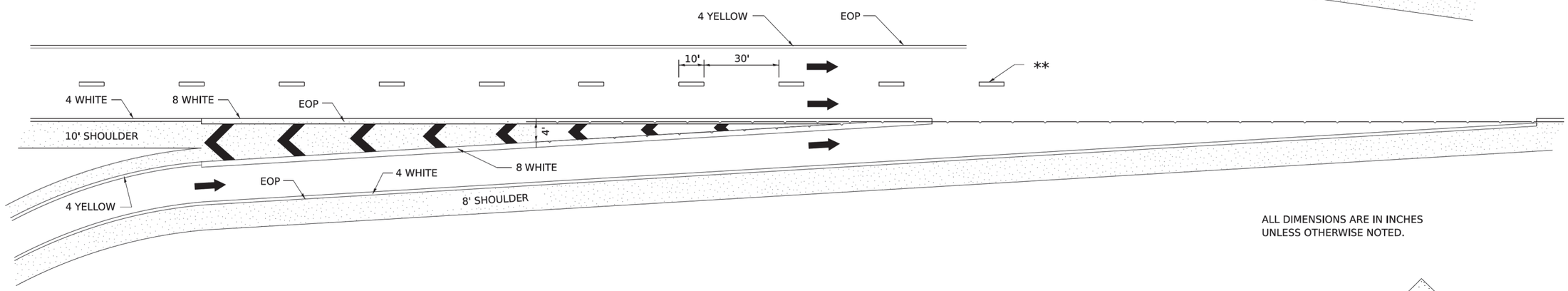

ALL DIMENSIONS ARE IN INCHES UNLESS OTHERWISE NOTED.

CLOVERLEAF

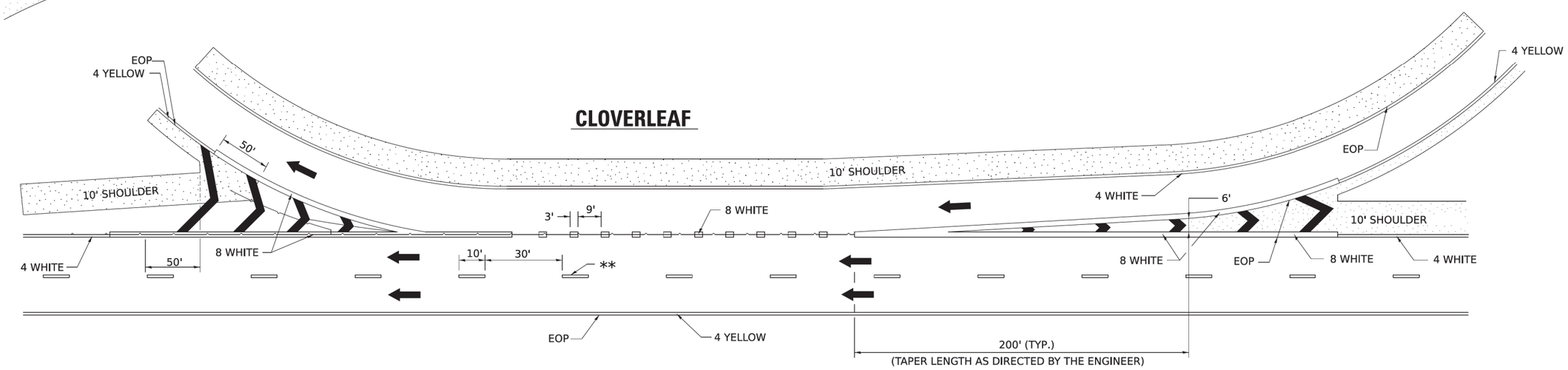

USER NAME = IDOT/District 2	DESIGNED -	REVISED - 9-15-23	STATE OF ILLINOIS DEPARTMENT OF TRANSPORTATION	REGION 2 / DISTRICT 2 STANDARD	F.A. RTE.	SECTION	COUNTY	TOTAL SHEETS	SHEET NO.
	DRAWN -	REVISED - 8-27-13							
PLOT SCALE = 0.083 ' / in.	CHECKED -	REVISED - 10-18-11					CONTRACT NO.		
PLOT DATE = 9/20/2023	DATE -	REVISED -		SCALE: SHEET OF SHEETS STA. TO STA.		ILLINOIS	FED. AID PROJECT		

TYPICAL PAVEMENT MARKINGS SHEET 4 OF 4 41.1

CHASTAIN & ASSOCIATES LLC
CONSULTING ENGINEERS

USER NAME = dwozniarski	DESIGNED -	REVISED -	STATE OF ILLINOIS DEPARTMENT OF TRANSPORTATION	IDEAL ROAD RECONSTRUCTION TYPICAL PAVEMENT MARKINGS	F.A.S. RTE.	SECTION	COUNTY	TOTAL SHEETS	SHEET NO.
	DRAWN -	REVISED -							
PLOT SCALE = 39.9984 ' / in.	CHECKED -	REVISED -			1084	20-00102-00-PV	CARROLL	217	92
PLOT DATE = 6/14/2024	DATE - 04/17/2024	REVISED -		SCALE: SHEET 8 OF 8 SHEETS STA. TO STA.			CONTRACT NO. 85761		
						ILLINOIS	FED. AID PROJECT		

MODEL: Default
FILE NAME: R:\PI County\7997 Carroll County - Ideal Road Reconstruction\CADD\CADD Civil\Sheets\7997-sht-District Detail.dgn

85761

FINAL SURVEY		BY	DATE
NOTE BOOK	SURVEYED		
	PLOTTED		
	TEMPLATE		
	AREAS		
NO.	AREAS CHECKED		

ORIGINAL SURVEY		BY	DATE
NOTE BOOK	SURVEYED		
	PLOTTED		
	TEMPLATE		
	AREAS		
NO.	AREAS CHECKED		

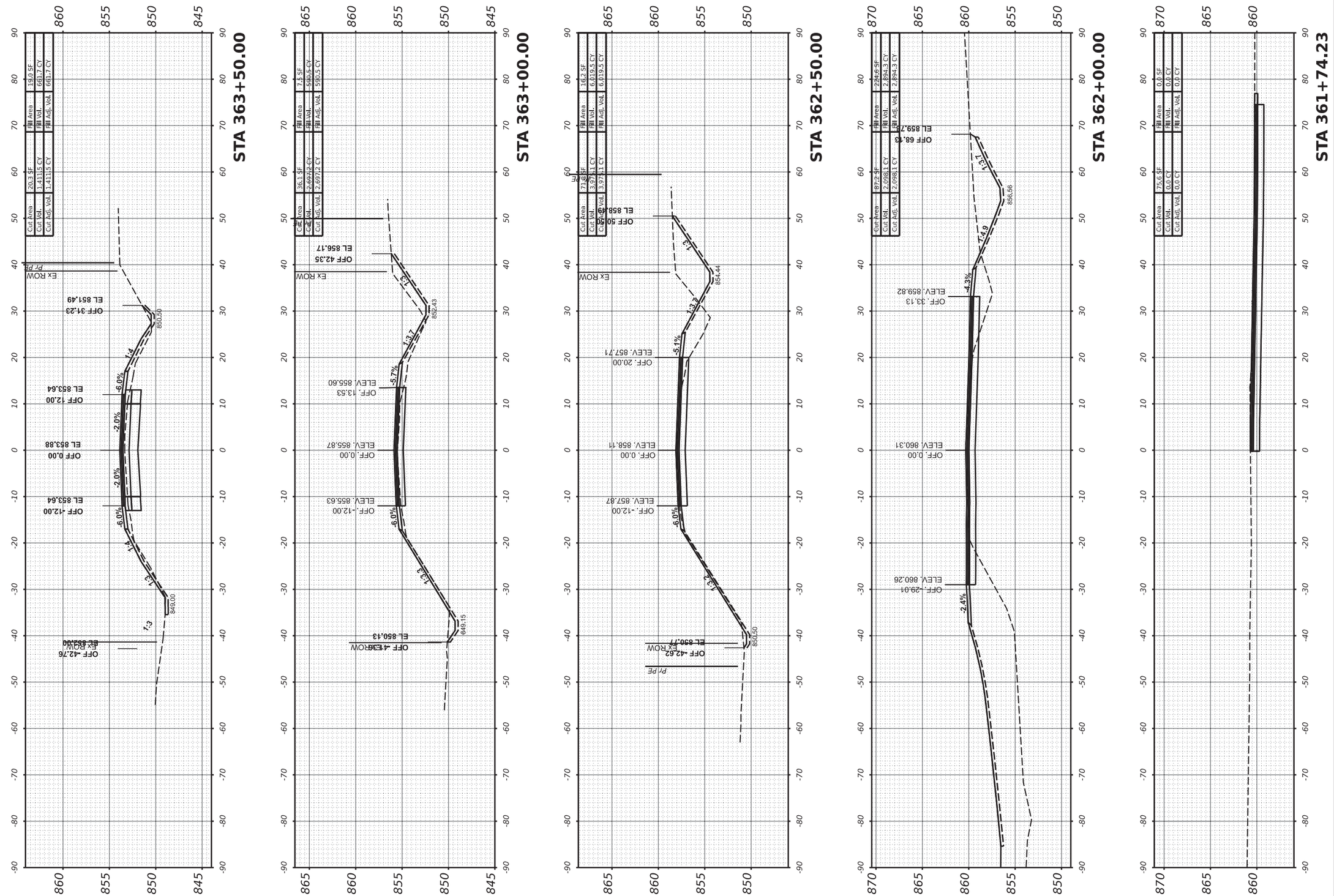

MODEL: PrCL-3 - 361+74.23 [Sheet]
FILE NAME: R:\Pr_County\7997 Carroll County - Ideal Road Reconstruction\CADD\CADD_Civil\Sheets\7997-SHT_X-Sect-Ideal-v3-01.dgn

USER NAME = dwozniarski	DESIGNED -	REVISED -	STATE OF ILLINOIS DEPARTMENT OF TRANSPORTATION
	DRAWN -	REVISED -	
PLOT SCALE = 0.16666633 ' / in.	CHECKED -	REVISED -	
PLOT DATE = 6/14/2024	DATE - 04/17/2024	REVISED -	

IDEAL ROAD RECONSTRUCTION
CROSS SECTIONS – IDEAL ROAD

SCALE: 1" = 10' H, 1" = 5' V | SHEET 0 OF 125 SHEETS | STA.

F.A.B. RTE.	SECTION	COUNTY	TOTAL SHEETS	SHEET NO.
0187E	20-00000-00-PV	CARROLL	217	93
		CONTRACT NO. 85761		
	ILLINOIS	FED. AID PROJECT		

85761

FINAL SURVEY		BY	DATE
NOTE BOOK	SURVEYED		
	PLOTTED		
	TEMPLATE		
	AREAS		
NO.	AREAS CHECKED		

ORIGINAL SURVEY		BY	DATE
NOTE BOOK	SURVEYED		
	PLOTTED		
	TEMPLATE		
	AREAS		
NO.	AREAS CHECKED		

MODEL: P-CL-3 - 364+00.00 [Sheet]
FILE NAME: R:\Pl_County\7997 Carroll County - Ideal Road Reconstruction\CADD\CADD_Civil\Sheets\7997-SHT_X-Sect-Ideal-x3-01.dgn

USER NAME = dwozniarski	DESIGNED -	REVISED -
	DRAWN -	REVISED -
PLOT SCALE = 0.16666633 ' / in.	CHECKED -	REVISED -
PLOT DATE = 6/14/2024	DATE - 04/17/2024	REVISED -

STATE OF ILLINOIS
DEPARTMENT OF TRANSPORTATION

IDEAL ROAD RECONSTRUCTION
CROSS SECTIONS – IDEAL ROAD

SCALE: 1" = 10' H, 1" = 5' V | SHEET OF 125 SHEETS | STA.

F.A.S. RTE.	SECTION	COUNTY	TOTAL SHEETS	SHEET NO.
1084	20-00102-00-PV	CARROLL	217	94

CONTRACT NO. 85761

ILLINOIS | FED. AID PROJECT

85761

FINAL SURVEY		BY	DATE
NOTE BOOK	SURVEYED		
	PLOTTED		
	TEMPLATE		
	AREAS		
NO.	AREAS CHECKED		

ORIGINAL SURVEY		BY	DATE
NOTE BOOK	SURVEYED		
	PLOTTED		
	TEMPLATE		
	AREAS		
NO.	AREAS CHECKED		

MODEL: P-CL-3 - 365+50.00 [Sheet]
FILE NAME: R:\PI_County\7997 Carroll County - Ideal Road Reconstruction\CADD\CADD_Civil\Sheets\7997-SHT_X-Sect-Ideal-v3-01.dgn

USER NAME = dwozniarski	DESIGNED -	REVISED -	
	DRAWN -	REVISED -	
PLOT SCALE = 0.16666633 ' / in.	CHECKED -	REVISED -	
PLOT DATE = 6/14/2024	DATE - 04/17/2024	REVISED -	

STATE OF ILLINOIS
DEPARTMENT OF TRANSPORTATION

IDEAL ROAD RECONSTRUCTION
CROSS SECTIONS – IDEAL ROAD

SCALE: 1" = 10' H, 1" = 5' V | SHEET OF 125 SHEETS | STA.

F.A.S. RTE.	SECTION	COUNTY	TOTAL SHEETS	SHEET NO.
1084	20-00102-00-PV	CARROLL	217	95
		CONTRACT NO. 85761		
		ILLINOIS	FED. AID PROJECT	

85761

FINAL SURVEY		BY	DATE
NOTE BOOK	SURVEYED		
	PLOTTED		
	TEMPLATE		
	AREAS		
NO.	AREAS CHECKED		

ORIGINAL SURVEY		BY	DATE
NOTE BOOK	SURVEYED		
	PLOTTED		
	TEMPLATE		
	AREAS		
NO.	AREAS CHECKED		

MODEL: PrCL-3 - 367+50.00 [Sheet]
FILE NAME: R:\PrL\County\7997 Carroll County - Ideal Road Reconstruction\CADD\CADD_Civil\Sheets\7997-SHT_X-Sect-Ideal-v3-01.dgn

USER NAME = dwozniarski	DESIGNED -	REVISED -
	DRAWN -	REVISED -
PLOT SCALE = 0.16666633 ' / in.	CHECKED -	REVISED -
PLOT DATE = 6/14/2024	DATE - 04/17/2024	REVISED -

STATE OF ILLINOIS
DEPARTMENT OF TRANSPORTATION

IDEAL ROAD RECONSTRUCTION
CROSS SECTIONS – IDEAL ROAD

SCALE: 1" = 10' H, 1" = 5' V | SHEET OF 125 SHEETS | STA.

F.A.S. RTE.	SECTION	COUNTY	TOTAL SHEETS	SHEET NO.
1084	20-00102-00-PV	CARROLL	217	96

CONTRACT NO. 85761

ILLINOIS | FED. AID PROJECT

85761

FINAL SURVEY		BY	DATE
NOTE BOOK	SURVEYED		
	PLOTTED		
	TEMPLATE		
	AREAS		
NO.	AREAS CHECKED		

ORIGINAL SURVEY		BY	DATE
NOTE BOOK	SURVEYED		
	PLOTTED		
	TEMPLATE		
	AREAS		
NO.	AREAS CHECKED		

MODEL: PrCL-3 - 369+50.00 [Sheet]
FILE NAME: R:\Pl_County\7997 Carroll County - Ideal Road Reconstruction\CADD\CADD_Civil\Sheets\7997-SHT_X-Sect-Ideal+v3-01.dgn

USER NAME = dwozniarski	DESIGNED -	REVISED -	
	DRAWN -	REVISED -	
PLOT SCALE = 0.16666633 ' / in.	CHECKED -	REVISED -	
PLOT DATE = 6/14/2024	DATE - 04/17/2024	REVISED -	

STATE OF ILLINOIS
DEPARTMENT OF TRANSPORTATION

IDEAL ROAD RECONSTRUCTION
CROSS SECTIONS – IDEAL ROAD

SCALE: 1" = 10' H, 1" = 5' V | SHEET OF 125 SHEETS | STA.

F.A.S. RTE.	SECTION	COUNTY	TOTAL SHEETS	SHEET NO.
1084	20-00102-00-PV	CARROLL	217	97

CONTRACT NO. 85761

ILLINOIS | FED. AID PROJECT

85761

FINAL SURVEY		BY	DATE
NOTE BOOK	SURVEYED		
	PLOTTED		
	TEMPLATE		
	AREAS		
NO.	AREAS CHECKED		

ORIGINAL SURVEY		BY	DATE
NOTE BOOK	SURVEYED		
	PLOTTED		
	TEMPLATE		
	AREAS		
NO.	AREAS CHECKED		

MODEL: PrCL-3 - 371+50.00 [Sheet]
FILE NAME: R:\PI_County\7997 Carroll County - Ideal Road Reconstruction\CADD\CADD_Civil\Sheets\7997-SHT_X-Sect-Ideal-v3-01.dgn

USER NAME = dwozniarski	DESIGNED -	REVISED -	
	DRAWN -	REVISED -	
PLOT SCALE = 0.16666633 ' / in.	CHECKED -	REVISED -	
PLOT DATE = 6/14/2024	DATE - 04/17/2024	REVISED -	

STATE OF ILLINOIS
DEPARTMENT OF TRANSPORTATION

IDEAL ROAD RECONSTRUCTION
CROSS SECTIONS – IDEAL ROAD

SCALE: 1" = 10' H, 1" = 5' V | SHEET OF 125 SHEETS | STA.

F.A.S. RTE.	SECTION	COUNTY	TOTAL SHEETS	SHEET NO.
1084	20-00102-00-PV	CARROLL	217	98

CONTRACT NO. 85761

ILLINOIS | FED. AID PROJECT

85761

FINAL SURVEY		BY	DATE
NOTE BOOK	SURVEYED		
	PLOTTED		
	TEMPLATE		
	AREAS		
NO.	AREAS CHECKED		

ORIGINAL SURVEY		BY	DATE
NOTE BOOK	SURVEYED		
	PLOTTED		
	TEMPLATE		
	AREAS		
NO.	AREAS CHECKED		

MODEL: P-CL-3 - 373+50.00 [Sheet]
FILE NAME: R:\PI_County\7997 Carroll County - Ideal Road Reconstruction\CADD\CADD_Civil\Sheets\7997-SHT_X-Sect-Ideal-v3-01.dgn

USER NAME = dwozniarski	DESIGNED -	REVISED -	
	DRAWN -	REVISED -	
PLOT SCALE = 0.16666633 ' / in.	CHECKED -	REVISED -	
PLOT DATE = 6/14/2024	DATE - 04/17/2024	REVISED -	

STATE OF ILLINOIS
DEPARTMENT OF TRANSPORTATION

IDEAL ROAD RECONSTRUCTION
CROSS SECTIONS – IDEAL ROAD

SCALE: 1" = 10' H, 1" = 5' V | SHEET OF 125 SHEETS | STA.

F.A.S. RTE.	SECTION	COUNTY	TOTAL SHEETS	SHEET NO.
1084	20-00102-00-PV	CARROLL	217	99

CONTRACT NO. 85761

ILLINOIS | FED. AID PROJECT

85761

FINAL SURVEY		BY	DATE
NOTE BOOK	SURVEYED		
	PLOTTED		
	TEMPLATE		
	AREAS		
NO.	AREAS CHECKED		

ORIGINAL SURVEY		BY	DATE
NOTE BOOK	SURVEYED		
	PLOTTED		
	TEMPLATE		
	AREAS		
NO.	AREAS CHECKED		

MODEL: PrCL-3 - 376+00.00 [Sheet]
FILE NAME: R:\Pr_County\7997 Carroll County - Ideal Road Reconstruction\CADD\CADD_Civil\Sheets\7997-SHT_X-Sect-Ideal-v3-01.dgn

USER NAME = dwozniarski	DESIGNED -	REVISED -	
	DRAWN -	REVISED -	
PLOT SCALE = 0.16666633 ' / in.	CHECKED -	REVISED -	
PLOT DATE = 6/14/2024	DATE - 04/17/2024	REVISED -	

STATE OF ILLINOIS
DEPARTMENT OF TRANSPORTATION

IDEAL ROAD RECONSTRUCTION
CROSS SECTIONS – IDEAL ROAD

SCALE: 1" = 10' H, 1" = 5' V | SHEET OF 125 SHEETS STA.

F.A.S. RTE.	SECTION	COUNTY	TOTAL SHEETS	SHEET NO.
1084	20-00102-00-PV	CARROLL	217	100

CONTRACT NO. 85761

ILLINOIS | FED. AID PROJECT