08-02-2024 LETTING ITEM 061

F.A.I. RTE.	SECTION	COUNTY	TOTAL SHEETS	SHEET NO.
270	60-3K-1	MADISON	576	1
	ILLINOIS	CONTRACT NO. 76818		

STATE OF ILLINOIS
DEPARTMENT OF TRANSPORTATION

FOR INDEX OF SHEETS, SEE SHEET NO. 2

PROPOSED HIGHWAY PLANS

FAI ROUTE 270 (I–270)
SECTION 60–3K–1
PROJECT NHFP–U7JU(108)
INTERCHANGE RECONSTRUCTION
MADISON COUNTY

C–98–084–04

D-98-071-04

LOCATION OF SECTION INDICATED THUS:–

TRAFFIC DATA

IL 111 FROM CHAIN OF ROCKS TO I–270		
	2024	2044
ADT	17,500	21,400
SU%	7.9%	
MU%	19.5%	

IL 111 FROM I–270 TO ENGINEERS RD.		
	2024	2044
ADT	15,350	18,750
SU%	4.2%	
MU%	2.9%	

BEGIN PROJECT
STA. 17 + 27.44
(EX. IL RTE. 111)
LAT.: 38.76112
LONG.: –90.06658

END PROJECT
STA. 48 + 00.00
(EX. IL RTE. 111)
LAT.: 38.75358
LONG.: –90.06886

R9W

T4N

T3N

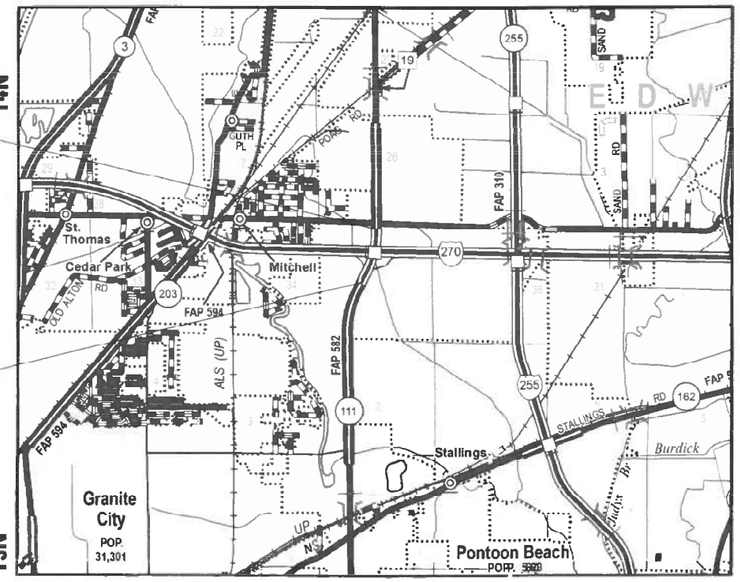

N

LOCATION MAP
(NOT TO SCALE)

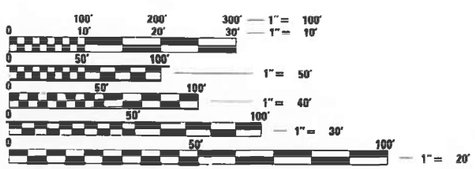

FULL SIZE PLANS HAVE BEEN PREPARED USING STANDARD ENGINEERING SCALES. REDUCED SIZED PLANS WILL NOT CONFORM TO STANDARD SCALES. IN MAKING MEASUREMENTS ON REDUCED PLANS, THE ABOVE SCALES MAY BE USED.

J.U.L.I.E.
JOINT UTILITY LOCATION INFORMATION FOR EXCAVATORS
1–800–892–0123
OR 811

GROSS LENGTH = 3072.50 FT. = 0.582 MILE
NET LENGTH = 3072.50 FT. = 0.582 MILE

STATE OF ILLINOIS
DEPARTMENT OF TRANSPORTATION

SUBMITTED June 24 2024
REGIONAL ENGINEER

June 28, 2024
ENGINEER OF DESIGN AND ENVIRONMENT

June 28, 2024
DIRECTOR OF HIGHWAYS PROJECT IMPLEMENTATION

PROJECT ENGINEER: TIFFANY BRASE
PROJECT MANAGER: JON DINTELMAN

CONTRACT NO. 76818

PRINTED BY THE AUTHORITY OF THE STATE OF ILLINOIS

INDEX OF SHEETS

HIGHWAY STANDARDS

000001 - 08	STANDARD SYMBOLS, ABBREVIATIONS AND PATTERNS
001001 - 02	AREAS OF REINFORCEMENT BARS
001006	DECIMAL OF AN INCH AND OF A FOOT
280001 - 07	TEMPORARY EROSION CONTROL SYSTEMS
285001- 02	FABRIC FORMED CONCRETE REVETMENTS MATS
420001 - 10	PAVEMENT JOINTS
420101 - 07	24' JOINTED PCC PAVEMENT
420106 - 07	36' JOINTED PCC PAVEMENT
420201-12	ENTRANCE RAMP TERM. (JOINT. PCC RAMP PAVEMENT ADJ. TO JOINT. PCC MAINLINE PAVEMENT)
420206 - 13	ENTRANCE RAMP TERM. (JOINT. PCC RAMP PAVEMENT ADJ. TO CRC MAINLINE PAVEMENT)
420301- 09	EXIT RAMP TERM. (JOINT. PCC RAMP PAVEMENT ADJ. TO JOINT. PCC MAINLINE PAVEMENT)
420701- 03	PAVEMENT WELDED WIRE REINFORCEMENT
483001 - 06	PCC SHOULDER
542401- 04	METAL FLARED END SECTION FOR PIPE CULVERTS
542546 - 01	FLUSH INLET BOX FOR MEDIAN
601001- 05	PIPE UNDERDRAINS
601101 -02	CONCRETE HEADWALL FOR PIPE UNDERAINS
602301 - 04	INLET-TYPE A
602306 - 03	INLET-TYPE B
602401- 07	PRECAST MANHOLE, TYPE A, 4' DIA.
602402 - 03	PRECAST MANHOLE, TYPE A, 5' DIA.
602406 -11	PRECAST MANHOLE, TYPE A, 6' DIA.
602416 - 09	PRECAST MANHOLE, TYPE A, 8' DIA.
602601 - 06	PRECAST REINFORCED CONCRETE FLAT SLAB TOP
602701 - 02	MANHOLE STEPS
604001 - 05	FRAME AND LIDS, TYPE 1
604006 - 05	FRAME AND GRATE TYPE 3
604101 - 01	MEDIAN INLET FOR 24" REINFORCED CONCRETE PIPE
606001 - 08	CONCRETE CURB TYPE B AND COMBINATION CONCRETE CURB AND GUTTER
606301 - 04	PC CONCRETE ISLANDS AND MEDIANS
610001 - 09	SHOULDER INLET WITH CURB
630001 - 13	STEEL PLATE BEAM GUARDRAIL
630106 - 02	LONG-SPAN GUARDRAIL OVER CULVERT
630201 - 07	PCC/HMA STABILIZATION AT STEEL PLATE BEAM GUARDRAIL
630301 - 09	SHOULDER WIDENING FOR TYPE 1 (SPECIAL) GUARDRAIL TERMINALS
631011 - 10	TRAFFIC BARRIER TERMINAL, TYPE 2
631031 - 18	TRAFFIC BARRIER TERMINAL, TYPE 6
701101 - 05	OFF-ROAD MOVING OPERATIONS, 2L, 2W, DAY ONLY
701106 - 02	OFF-ROAD OPERATIONS, MULTITLANE, MORE THAN 15' AWAY
701400 - 12	APPROACH TO LANE CLOSURE, FREEWAY/EXPRESSWAY
701401 - 13	LANE CLOSURE, FREEWAY/EXPRESSWAY
701406 - 13	LANE CLOSURE, FREEWAY/EXPRESSWAY DAY ONLY
701411 - 09	LANE CLOSURE, MULTILANE, AT ENTRANCE OR EXIT RAMP, FOR SPEEDS > 45 MPH
701421 - 08	LANE CLOSURE, MULTILANE, DAY OPERATIONS ONLY, FOR SPEEDS > 45 MPH TO 55 MPH
701426 - 09	LANE CLOSURE, MULTILANE, INTERMITTENT OR MOVING OPERATION,, FOR SPEEDS > 45 MPH
701428 - 01	TRAFFIC CONTROL, SETUP AND REMOVAL, FREEWAY/EXPRESSWAY
701446 - 11	TWO LANE CLOSURE, FREEWAY/EXPRESSWAY
701451 - 05	RAMP CLOSURE, FREEWAY/EXPRESSWAY
701701 - 10	URBAN LANE CLOSURE, URBAN LANE CLOSURE, MULTILANE INTERSECTION
701901 - 09	TRAFFIC CONTROL DEVICES
720001 - 01	SIGN PANEL MOUNTING DETAILS
720006 - 04	SIGN PANEL ERECTION DETAILS
720011 - 01	METAL POSTS FOR SIGNS, MARKERS AND DELINEATORS
720016 - 04	MAST ARM MOUNTED STREET NAME SIGNS
720021 - 03	SIGN PANELS, EXTRUDED ALUMINUM TYPE
725001 - 01	OBJECT AND TERMINAL MARKERS
728001 - 01	TELESCOPING STEEL SIGN SUPPORT
731001 - 01	BASE FOR TELESCOPING STEEL SIGN SUPPORT
780001 - 05	TYPICAL PAVEMENT MARKINGS
781001 - 04	TYPICAL APPLICATIONS RAISED REFLECTIVE PAVEMENT MARKERS
782006 - 01	GUARDRAIL AND BARRIER WALL REFLECTOR MOUNTING DETAILS
805001 - 01	ELECTRICAL SERVICE INSTALLATION DETAILS
814001 - 03	HANDHOLES
814006 - 03	DOUBLE HANDHOLES
821101 - 02	LUMINAIRE WIRING IN POLE
825026 - 04	LIGHTING CONTROLLER BASE MOUNT 480V
830006 - 05	LIGHT POLE ALUMINUM DAVIT ARM
835001 - 02	LIGHT TOWER
836001 - 04	LIGHT POLE FOUNDATION
837001 - 05	LIGHT TOWER FOUNDATION
877001 - 08	STEEL MAST ARM ASSEMBLY & POLE 16' THRU 55'
878001 - 11	CONCRETE FOUNDATION DETAILS
880006 - 01	TRAFFIC SIGNAL MNT. DETAILS-POST & BRACK. MOUNT
442201-03	CLASS C AND D PATCHES
542301-03	PRECAST REINFORCED COCNRETE FLARED END SECTION
602411-09	PRECAST MANHOLE, TYPE A, 7' DIAMETER
602421-09	PRECAST MANHOLE, TYPE A, 9' DIAMETER
604051-04	FRAME AND GRATE, TYPE 11
642001-03	SHOULDER RUMBLE STRIPS, 16 IN.
664001-02	CHAIN LINK FENCE
667101-02	PERMANENT SURVEY MARKERS
838001-01	BREAKAWAY DEVICES
857001-01	STD PHASE DESIGNATION DIAGRAMS & PHASE SEQUENCES
862001-01	UNINTERRUPTABLE POWER SUPPLY (UPS)
873001-02	TRAFFIC SIGNAL GROUNDING & BONDING

REV. - MS

MODEL: Default
FILE NAME: pw:\\ildot-pw.bentley.com:PWIDOT\Documents\IDOT Offices\District 8\Projects\D876818\CADData\CADsheets\D876818-sht-gennote.dgn

USER NAME = Jon.Dintelman	DESIGNED - _____	REVISED - _____	STATE OF ILLINOIS DEPARTMENT OF TRANSPORTATION
	DRAWN - _____	REVISED - _____	
PLOT SCALE = 100.0000 ' / in.	CHECKED - _____	REVISED - _____	
PLOT DATE = 6/5/2024	DATE - _____	REVISED - _____	

INDEX OF SHEETS & STANDARDS

SCALE: _____ | SHEET 1 OF 1 SHEETS | STA. _____ TO STA. _____

F.A.I. RTE.	SECTION	COUNTY	TOTAL SHEETS	SHEET NO.
270	60-3K-1	MADISON	576	2
		CONTRACT NO. 76818		
		ILLINOIS	FED. AID PROJECT	

GENERAL NOTES

1. THE CONTRACTOR SHALL VERIFY ALL DIMENSIONS AND CONDITIONS IN THE FIELD PRIOR TO CONSTRUCTION AND ORDERING OF MATERIALS.

2. ALL REMOVED GUARDRAIL COMPONENTS ARE THE PROPERTY OF THE CONTRACTOR AND THE SALVAGE VALUE OF SAID COMPONENTS SHALL BE REFLECTED IN THE CONTRACTOR'S BID.

3. THE FOLLOWING UTILITIES KNOWN TO HAVE FACILITIES WITHIN THE PROJECT AREA ARE AS FOLLOWS:

* ADP COMPAINIES 21 PROGRESS PARKWAY UNION, MO 63084	JULIE MEMBER
* AMEREN ILLINOIS 1050 WEST BOULEVARD BELLEVILLE, IL 62221-416910	JULIE MEMBER
* AT&T ILLINOIS 3526 STATE ROUTE 161 ROOM 121 CENTRALIA, IL 62801	JULIE MEMBER
* BUCKEYE PIPE LINE CO. 5002 BUCKEYE ROAD EMMAUS PA 18049	JULIE MEMBER
* CHARTER COMM., INC. 210 WEST DIVISION STREET MARYVILLE, IL 62062	JULIE MEMBER
* EVERSTREAM GLC HOLDING CO., LLC 1228 EUCLID AVE. SUITE 250 CLEVELAND, OH 44115	JULIE MEMBER
* ILLINOIS AMERICAN WATER CO. 100 N. WATER WORKS DRIVE BELLEVILLE, IL 62223-9040	JULIE MEMBER
* LEVEL 3 COMM., LLC 1015 LOCUST STREET SUITE 800 ST. LOUIS, MO 63101	JULIE MEMBER
* MADISON CO. SOIL AND WATER CONSERVATION DIST. 7205 MARINE ROAD EDWARDSVILLE, IL 62025	JULIE MEMBER
* MCI NETWORK SERVICES, INC. 730 WEST HENRY STREET INDIANAPOLIS, IN 46225	JULIE MEMBER
* MITCHELL PUBLIC WATER DIST. 745 E. CHAIN OF ROCKS ROAD P.O. BOX 8025 GRANITE CITY, IL 62040	JULIE MEMBER
* PONTOON BEACH PUBLIC WATER DIST. 3959 PONTOON ROAD P.O. BOX 1176 N.S. GRANITE CITY, IL 62040-1176	JULIE MEMBER

4. IF THE CONTRACTOR, FOR HIS CONSTRUCTION ACTIVITY, REMOVES TREES WITHIN THE RIGHT-OF-WAY LIMITS WHICH ARE NOT DESIGNATED ON THE PLANS FOR REMOVAL, I.E. IN ORDER TO GAIN ACCESS TO THE PROJECT SITE; IT WILL BE HIS RESPONSIBILITY TO REPLACE THE TREES AT A 1:1 RATIO. THE TREES WILL BE REPLACED WITH A 1 GALLON NATIVE ILLINOIS TREE SPECIES AND SHALL BE APPROVED BY THE ENGINEER. THE TREE REMOVAL AND TREE REPLACEMENT WILL BE AT THE CONTRACTOR'S EXPENSE, AND NO ADDITIONAL COMPENSATION WILL BE ALLOWED.

5. THE DEPARTMENT STRONGLY ENCOURAGES THE PRIME CONTRACTOR AND THEIR APPROVED SUB-CONTRACTORS TO HIRE MINORITY, WOMEN AND DISADVANTAGED INDIVIDUALS FROM ITS FEDERALLY FUNDED HIGHWAY CONSTRUCTION CAREERS TRAINING PROGRAM (HCCTP) TO HELP MEET WORKFORCE AND TRAINEE GOALS. THIS PROGRAM IS TRAINING MINORITIES, WOMEN AND DISADVANTAGED INDIVIDUALS IN HIGHWAY CONSTRUCTION-RELATED SKILLS, E.G., MATH FOR THE TRADES, JOB READINESS, TECHNICAL SKILLS COURSEWORK (CARPENTRY, CONCRETE FLATWORK, BLUEPRINT READING, SITE PLANS, SITE WORK, TOOLS USE, ETC.) AND OSHA 10 HOUR CERTIFICATION, TO PREPARE THEM FOR A CAREER IN THE HIGHWAY CONSTRUCTION TRADES. GRADUATES ARE WELL-TRAINED AND READY TO BECOME PRODUCTIVE ENTRY-LEVEL CONSTRUCTION WORKERS. CONTACT THE DISTRICT 8 EEO OFFICE AT 618-346-3360 AND/OR THE HCCTP COORDINATOR AT 618-874-6528 TO LEARN MORE ABOUT THE PROGRAM AND FOR ASSISTANCE IN MEETING WORKFORCE AND TRAINEE GOALS.

6. THE FOLLOWING MIXTURE REQUIREMENTS ARE APPLICABLE FOR THIS PROJECT:

MIXTURE USE	POLY SURFACE	BINDER	STABLILIZED SUB-BASE	PATCHING
AC/PG	SBS PG 70-28	PG 64-22	PG 64-22	PG 64-22
RAP % (MAX)	SEE SPECIAL PROVISION	SEE SPECIAL PROVISION	SEE SPECIAL PROVISION	SEE SPECIAL PROVISION
DESIGN AIR VOIDS	4.0% @ Ndes=90	4.0% @ Ndes=90	4.0% @ Ndes=90	4.0% @ Ndes=90
MIX COMPOSITION (GRADATION)	IL 9.5	IL 19.0	IL 19.0	IL 19.0
FRICTION AGG	MIXTURE "D"	MIXTURE "B"	MIXTURE "B"	MIXTURE "B"
QUALITY MGMT PROGRAM	QC/QA	QC/QA	QC/QA	QC/QA

PLAN QUANTITIES FOR HOT-MIX ASPHALT SURFACE COURSE ITEMS ARE CALCULATED USING A UNIT WEIGHT OF 112 LB/SQ YD/IN.

THE FOLLOWING MIXTURE REQUIREMENTS ARE APPLICABLE FOR THIS PROJECT:

7. ALL ELEVATIONS REFER TO THE USGS MEAN SEA LEVEL DATUM.

LOW DISTORTIN PROJECTION – MADISON COUNTY
BASIS OF BEARINGS AND COORDINATES: ALL DISTANCES AND BEARINGS SHOWN HEREON ARE GRID VALUES BASED ON THE FOLLOWING PROJECTION DEFINITION.
THE PROJECTION WAS DEFINED SUCH THAT GRID DISTANCES ARE EQUIVALENT TO "GROUND" DISTANCES.
LINEAR UNIT: US SURVEY FOOT
GEODETIC DATUM: NAD 1983 (2011) - EPOCH: 2010
VERTICAL DATUM: NAVD 1988
PROJECTION: LAMBERT CONFROMAL CONIC (SINGLE PARALLEL)
LATITUDE OF ORIGIN: 38°50'00"N
CENTRAL MERIDIAN: 89°56'00'W
FALSE NORTHING: 79,000.000 SFT
FALSE EASTING: 103,000.000 SFT
CM SCALE FACTOR: 1.000019129
THE SURVEY WAS REFERENCED TO THE NATIONAL SPATIAL REFERENCE SYSTEM BY CONNECTION TO THE FOLLOWING NGS MONUMENTS.

CONTROL: A 283 LATITUDE: N38°44'57.03909" LONGITUDE: W90°08'42.55951" Ellipsoid Ht: 343.498 SFT	NORTHING: 48419.0236 SFT EASTING: 42585.5907 SFT Orthometric Ht: 446.196 (Geoid 12B)
CONTROL: M 283 LATITUDE: N38°47'08.14134" LONGITUDE: W90°07'20.81484" Ellipsoid Ht.: 342.447 SFT	NORTHING: 61668.5442 SFT EASTING: 49089.3227 SFT Orthometric Ht: 445.290 (Geoid 1

COMMITMENTS

CONTRACTOR SHALL BE AWARE OF THE ARCHAEOLOGICAL COORDINATION SPECIAL PROVISION.

CODE NO.	ITEM	UNIT	TOTAL QUANTITY	CONSTR. CODE ROADWAY 0003 URBAN
20101400	NITROGEN FERTILIZER NUTRIENT	POUND	3289	3289
20101500	PHOSPHORUS FERTILIZER NUTRIENT	POUND	3289	3289
20101600	POTASSIUM FERTILIZER NUTRIENT	POUND	3289	3289
20200100	EARTH EXCAVATION	CU YD	98776	98776
20400800	FURNISHED EXCAVATION	CU YD	1268	1268
20800150	TRENCH BACKFILL	CU YD	2672	2672
25000200	SEEDING, CLASS 2	ACRE	37	37
25100115	MULCH, METHOD 2	ACRE	73	73
28000250	TEMPORARY EROSION CONTROL SEEDING	POUND	4277	4277
28000305	TEMPORARY DITCH CHECKS	FOOT	1063	1063
28000400	PERIMETER EROSION BARRIER	FOOT	2272	2272
28000500	INLET AND PIPE PROTECTION	EACH	14	14
28000510	INLET FILTERS	EACH	44	44
28100105	STONE RIPRAP, CLASS A3	SQ YD	1414	1414

CODE NO.	ITEM	UNIT	TOTAL QUANTITY	CONSTR. CODE ROADWAY 0003 URBAN
28100107	STONE RIPRAP, CLASS A4	SQ YD	114	114
28200200	FILTER FABRIC	SQ YD	114	114
30300112	AGGREGATE SUBGRADE IMPROVEMENT 12"	SQ YD	67,277	67,277
31200500	STABILIZED SUBBASE - HOT-MIX ASPHALT, 4"	SQ YD	67,277	67,277
35101600	AGGREGATE BASE COURSE, TYPE B 4"	SQ YD	9971	9971
40600290	BITUMINOUS MATERIALS (TACK COAT)	POUND	90	90
40600370	LONGITUDINAL JOINT SEALANT	FOOT	1350	1350
40603090	HOT-MIX ASPHALT BINDER COURSE, IL-19.0, N90	TON	454	454
40604164	POLYMERIZED HOT-MIX ASPHALT SURFACE COURSE, IL-9.5, MIX "D", N90	TON	312	312
42000060	WELDED WIRE REINFORCEMENT	SQ YD	46466	46466
42000521	PORTLAND CEMENT CONCRETE PAVEMENT 11" (JOINTED)	SQ YD	46466	46466
42001300	PROTECTIVE COAT	SQ YD	58289	58289
44000100	PAVEMENT REMOVAL	SQ YD	35,642	35,642
44000164	HOT-MIX ASPHALT SURFACE REMOVAL, 3 3/4"	SQ YD	3599	3599

REV - MS

MODEL: Default
FILE NAME: pw:\\ildot-pw.bentley.com:PWIDOT\Documents\IDOT Offices\District 8\Projects\D876818\CADData\CADsheets\D876818-sht-SQQ.dgn

USER NAME = Jon.Dintelman	DESIGNED - _____	REVISED - _____
	DRAWN - _____	REVISED - _____
PLOT SCALE = 100.0000 ' / in.	CHECKED - _____	REVISED - _____
PLOT DATE = 6/5/2024	DATE - _____	REVISED - _____

STATE OF ILLINOIS
DEPARTMENT OF TRANSPORTATION

SUMMARY OF QUANTITIES

SCALE: _____ SHEET OF __ SHEETS STA. _____ TO STA. _____

F.A.I. RTE.	SECTION	COUNTY	TOTAL SHEETS	SHEET NO.
270	60-3K-1	MADISON	576	4
		CONTRACT NO. 76818		
		ILLINOIS	FED. AID PROJECT	

CODE NO.	ITEM	UNIT	TOTAL QUANTITY	CONSTR. CODE ROADWAY 0003 URBAN
44000189	HOT-MIX ASPHALT SURFACE REMOVAL, 10"	SQ YD	1537	1537
44000500	COMBINATION CURB AND GUTTER REMOVAL	FOOT	891	891
44003100	MEDIAN REMOVAL	SQ FT	5748	5748
44004250	PAVED SHOULDER REMOVAL	SQ YD	22652	22652
44201747	CLASS D PATCHES, TYPE IV, 8 INCH	SQ YD	306	306
48102100	AGGREGATE WEDGE SHOULDER, TYPE B	TON	1126	1126
48300500	PORTLAND CEMENT CONCRETE SHOULDERS 10"	SQ YD	1537	1537
48300600	PORTLAND CEMENT CONCRETE SHOULDERS 11"	SQ YD	15455	15455
48301000	PROTECTIVE COAT	SQ YD	15455	15455
50104400	CONCRETE HEADWALL REMOVAL	EACH	16	16
50105220	PIPE CULVERT REMOVAL	FOOT	433	433
50200100	STRUCTURE EXCAVATION	CU YD	477	477
50200450	REMOVAL AND DISPOSAL OF UNSUITABLE MATERIAL FOR STRUCTURES	CU YD	106	106
50300225	CONCRETE STRUCTURES	CU YD	56.1	56.1
50300300	PROTECTIVE COAT	SQ YD	163	163

CODE NO.	ITEM	UNIT	TOTAL QUANTITY	CONSTR. CODE ROADWAY 0003 URBAN
50800105	REINFORCEMENT BARS	POUND	19,860	19,860
50800205	REINFORCEMENT BARS, EPOXY COATED	POUND	3570	3570
54002020	EXPANSION BOLTS 3/4 INCH	EACH	54	54
54003000	CONCRETE BOX CULVERTS	CU YD	98	98
542A0229	PIPE CULVERTS, CLASS A, TYPE 1 24"	FOOT	3	3
542A1069	PIPE CULVERTS, CLASS A, TYPE 2 24"	FOOT	11	11
542D0229	PIPE CULVERTS, CLASS D, TYPE 1 24"	FOOT	52	52
542D1069	PIPE CULVERTS, CLASS D, TYPE 2 24"	FOOT	154	154
542JA042	PIPE CULVERTS, CLASS A 42" (JACKED)	FOOT	236	236
542JA048	PIPE CULVERTS, CLASS A 48" (JACKED)	FOOT	220	220
54213660	PRECAST REINFORCED CONCRETE FLARED END SECTIONS 15"	EACH	1	1
54213669	PRECAST REINFORCED CONCRETE FLARED END SECTIONS 24"	EACH	3	3
54213681	PRECAST REINFORCED CONCRETE FLARED END SECTIONS 36"	EACH	8	8
54213693	PRECAST REINFORCED CONCRETE FLARED END SECTIONS 48"	EACH	3	3

REV - MS

MODEL: Default
FILE NAME: pw:\\ildot-pw.bentley.com:PWIDOT\Documents\IDOT Offices\District 8\Projects\D876818\CADData\CADsheets\D876818-sht-SOQ.dgn

USER NAME = Jon.Dintelman	DESIGNED - _____	REVISED - _____	
	DRAWN - _____	REVISED - _____	
PLOT SCALE = 100.0000 ' / in.	CHECKED - _____	REVISED - _____	
PLOT DATE = 6/5/2024	DATE - _____	REVISED - _____	

STATE OF ILLINOIS
DEPARTMENT OF TRANSPORTATION

SUMMARY OF QUANTITIES

SCALE: _____ SHEET OF __ SHEETS STA. _____ TO STA. _____

F.A.I. RTE.	SECTION	COUNTY	TOTAL SHEETS	SHEET NO.
270	60-3K-1	MADISON	576	5
		CONTRACT NO. 76818		
		ILLINOIS FED. AID PROJECT		

CODE NO.	ITEM	UNIT	TOTAL QUANTITY	CONSTR. CODE ROADWAY 0003 URBAN
54244405	FLUSH INLET BOX FOR MEDIAN, STANDARD 542546	EACH	10	10
54248510	CONCRETE COLLAR	CU YD	8.9	8.9
54262724	METAL FLARED END SECTIONS 24"	EACH	2	2
550A0050	STORM SEWERS, CLASS A, TYPE 1 12"	FOOT	417	417
550A0070	STORM SEWERS, CLASS A, TYPE 1 15"	FOOT	169	169
550A0090	STORM SEWERS, CLASS A, TYPE 1 18"	FOOT	266	266
550A0120	STORM SEWERS, CLASS A, TYPE 1 24"	FOOT	242	242
550A0160	STORM SEWERS, CLASS A, TYPE 1 36"	FOOT	286	286
550A0190	STORM SEWERS, CLASS A, TYPE 1 48"	FOOT	182	182
550A0340	STORM SEWERS, CLASS A, TYPE 2 12"	FOOT	681	681
550A0360	STORM SEWERS, CLASS A, TYPE 2 15"	FOOT	260	260
550A0380	STORM SEWERS, CLASS A, TYPE 2 18"	FOOT	302	302
550A0450	STORM SEWERS, CLASS A, TYPE 2 36"	FOOT	1007	1007
550A0470	STORM SEWERS, CLASS A, TYPE 2 42"	FOOT	938	938

CODE NO.	ITEM	UNIT	TOTAL QUANTITY	CONSTR. CODE ROADWAY 0003 URBAN
550A0480	STORM SEWERS, CLASS A, TYPE 2 48"	FOOT	1365	1365
550A0770	STORM SEWERS, CLASS A, TYPE 3 42"	FOOT	68	68
550A0780	STORM SEWERS, CLASS A, TYPE 3 48"	FOOT	121	121
59300100	CONTROLLED LOW-STRENGTH MATERIAL	CU YD	50	50
60100945	PIPE DRAINS 12"	FOOT	175	175
60108104	PIPE UNDERDRAINS, TYPE 1, 4"	FOOT	9888	9888
60108200	PIPE UNDERDRAINS 6" (SPECIAL)	FOOT	182	182
60218400	MANHOLES, TYPE A, 4'-DIAMETER, TYPE 1 FRAME, CLOSED LID	EACH	3	3
60218500	MANHOLES, TYPE A, 4'-DIAMETER, TYPE 3 FRAME AND GRATE	EACH	15	15
60221100	MANHOLES, TYPE A, 5'-DIAMETER, TYPE 1 FRAME, CLOSED LID	EACH	2	2
60223800	MANHOLES, TYPE A, 6'-DIAMETER, TYPE 1 FRAME, CLOSED LID	EACH	5	5
60224446	MANHOLES, TYPE A, 7'-DIAMETER, TYPE 1 FRAME, CLOSED LID	EACH	10	10
60224459	MANHOLES, TYPE A, 8'-DIAMETER, TYPE 1 FRAME, CLOSED LID	EACH	12	12
60224469	MANHOLES, TYPE A, 9'-DIAMETER, TYPE 1 FRAME, CLOSED LID	EACH	2	2

CODE NO.	ITEM	UNIT	TOTAL QUANTITY	CONSTR. CODE ROADWAY 0003 URBAN
60235700	INLETS, TYPE A, TYPE 3 FRAME AND GRATE	EACH	6	6
60236800	INLETS, TYPE A, TYPE 11 FRAME AND GRATE	EACH	3	3
60240220	INLETS, TYPE B, TYPE 3 FRAME AND GRATE	EACH	6	6
60240310	INLETS, TYPE B, TYPE 11 FRAME AND GRATE	EACH	1	1
60500060	REMOVING INLETS	EACH	2	2
60603500	COMBINATION CONCRETE CURB AND GUTTER, TYPE B-6.06	FOOT	156	156
60605000	COMBINATION CONCRETE CURB AND GUTTER, TYPE B-6.24	FOOT	6399	6399
60618300	CONCRETE MEDIAN SURFACE, 4 INCH	SQ FT	9971	9971
* 63000001	STEEL PLATE BEAM GUARDRAIL, TYPE A, 6 FOOT POSTS	FOOT	1275	1275
* 63000350	LONG-SPAN GUARDRAIL OVER CULVERT, 12 FT 6 IN SPAN	FOOT	25	25
* 63100045	TRAFFIC BARRIER TERMINAL, TYPE 2	EACH	5	5
* 63100085	TRAFFIC BARRIER TERMINAL, TYPE 6	EACH	9	9
* 63100167	TRAFFIC BARRIER TERMINAL, TYPE 1 (SPECIAL) TANGENT	EACH	8	8
63200310	GUARDRAIL REMOVAL	FOOT	2171	2171

CODE NO.	ITEM	UNIT	TOTAL QUANTITY	CONSTR. CODE ROADWAY 0003 URBAN
64200116	SHOULDER RUMBLE STRIPS, 16 INCH	FOOT	18516	18516
66400105	CHAIN LINK FENCE, 4'	FOOT	125	125
* 66900200	NON-SPECIAL WASTE DISPOSAL	CU YD	2060	2060
* 66900530	SOIL DISPOSAL ANALYSIS	EACH	2	2
* 66901001	REGULATED SUBSTANCES PRE-CONSTRUCTION PLAN	L SUM	1	1
* 66901003	REGULATED SUBSTANCES FINAL CONSTRUCTION REPORT	L SUM	1	1
* 66901006	REGULATED SUBSTANCES MONITORING	CAL DA	34	34
67000400	ENGINEER'S FIELD OFFICE, TYPE A	CAL MO	18	18
67100100	MOBILIZATION	L SUM	1	1
70107025	CHANGEABLE MESSAGE SIGN	CAL DA	18	18
70200100	NIGHTTIME WORK ZONE LIGHTING	L SUM	1	1
70300211	TEMPORARY PAVEMENT MARKING LETTERS AND SYMBOLS - PAINT	SQ FT	1155	1155
70300241	TEMPORARY PAVEMENT MARKING - LINE 6"- PAINT	FOOT	19317	19317
70300251	TEMPORARY PAVEMENT MARKING - LINE 8"- PAINT	FOOT	2388	2388
70300261	TEMPORARY PAVEMENT MARKING - LINE 12"- PAINT	FOOT	4121	4121
70300281	TEMPORARY PAVEMENT MARKING - LINE 24"- PAINT	FOOT	291	291

* SPECIALTY ITEM

REV - MS

	CODE NO.	ITEM	UNIT	TOTAL QUANTITY	CONSTR. CODE ROADWAY 0003 URBAN
*	72000100	SIGN PANEL - TYPE 1	SQ FT	265	265
*	72000200	SIGN PANEL - TYPE 2	SQ FT	178	178
*	72000300	SIGN PANEL - TYPE 3	SQ FT	7235	7235
*	72400100	REMOVE SIGN PANEL ASSEMBLY - TYPE A	EACH	8	8
*	72400200	REMOVE SIGN PANEL ASSEMBLY - TYPE B	EACH	1273	1273
*	72400310	REMOVE SIGN PANEL - TYPE 1	SQ FT	196	196
*	72400320	REMOVE SIGN PANEL - TYPE 2	SQ FT	380	380
*	72400330	REMOVE SIGN PANEL - TYPE 3	SQ FT	4242	4242
*	72400710	RELOCATE SIGN PANEL - TYPE 1	SQ FT	20	20
*	72501000	TERMINAL MARKER - DIRECT APPLIED	EACH	8	8
*	72700100	STRUCTURAL STEEL SIGN SUPPORT - BREAKAWAY	POUND	67304	67304
*	72800100	TELESCOPING STEEL SIGN SUPPORT	FOOT	255.5	255.5
*	73000100	WOOD SIGN SUPPORT	FOOT	209.8	209.8
*	73100100	BASE FOR TELESCOPING STEEL SIGN SUPPORT	EACH	23	23

	CODE NO.	ITEM	UNIT	TOTAL QUANTITY	CONSTR. CODE ROADWAY 0003 URBAN
*	73300100	OVERHEAD SIGN STRUCTURE - SPAN, TYPE I-A (4'-0" X 4'-6")	FOOT	174	174
*	73301810	OVERHEAD SIGN STRUCTURE WALKWAY, TYPE A	FOOT	131.7	131.7
*	73304000	OVERHEAD SIGN STRUCTURE - BRIDGE MOUNTED	FOOT	42.33	42.33
*	73400100	CONCRETE FOUNDATIONS	CU YD	123.9	123.9
*	73400200	DRILLED SHAFT CONCRETE FOUNDATIONS	CU YD	40.4	40.4
	73600100	REMOVE OVERHEAD SIGN STRUCTURE - SPAN	EACH	5	5
	73600200	REMOVE OVERHEAD SIGN STRUCTURE - CANTILEVER	EACH	2	2
	73602000	REMOVE OVERHEAD SIGN STRUCTURE - BRIDGE MOUNTED	EACH	2	2
	73700100	REMOVE GROUND MOUNTED SIGN SUPPORT	EACH	9	9
	73700200	REMOVE CONCRETE FOUNDATION - GROUND MOUNT	EACH	19	19
	73700300	REMOVE CONCRETE FOUNDATION - OVERHEAD	EACH	16	16
	73800900	REMOVE OVERHEAD SIGN STRUCTURE WALKWAY	FOOT	32.5	32.5
*	78004600	PREFORMED PLASTIC PAVEMENT MARKING, TYPE D - LETTERS AND SYMBOLS	SQ FT	1155	1155
*	78004630	PREFORMED PLASTIC PAVEMENT MARKING, TYPE D - LINE 6"	FOOT	19317	19317

* SPECIALTY ITEM

	CODE NO.	ITEM	UNIT	TOTAL QUANTITY	CONSTR. CODE ROADWAY 0003 URBAN
*	78004640	PREFORMED PLASTIC PAVEMENT MARKING, TYPE D - LINE 8"	FOOT	2388	2388
*	78004660	PREFORMED PLASTIC PAVEMENT MARKING, TYPE D - LINE 12"	FOOT	4121	4121
*	78004720	PREFORMED PLASTIC PAVEMENT MARKING, TYPE D - LINE 24"	FOOT	291	291
*	78011000	GROOVING FOR RECESSED PAVEMENT MARKING, LETTERS AND SYMBOLS	SQ FT	1155	1155
*	78011035	GROOVING FOR RECESSED PAVEMENT MARKING 7"	FOOT	19317	19317
*	78011045	GROOVING FOR RECESSED PAVEMENT MARKING 9"	FOOT	2388	2388
*	78011065	GROOVING FOR RECESSED PAVEMENT MARKING 13'	FOOT	4121	4121
*	78011125	GROOVING FOR RECESSED PAVEMENT MARKING 25'	FOOT	291	291
*	78100100	RAISED REFLECTIVE PAVEMENT MARKER	EACH	342	342
*	78200005	GUARDRAIL REFLECTORS, TYPE A	EACH	23	23
*	78300200	RAISED REFLECTIVE PAVEMENT MARKER REMOVAL	EACH	18	18
	78300202	PAVEMENT MARKING REMOVAL - WATER BLASTING	SQ FT	17107	17107
*	80300100	LOCATING UNDERGROUND CABLE	FOOT	200	200
*	80400100	ELECTRIC SERVICE INSTALLATION	EACH	2	2

	CODE NO.	ITEM	UNIT	TOTAL QUANTITY	CONSTR. CODE ROADWAY 0003 URBAN
*	80500100	SERVICE INSTALLATION, TYPE A	EACH	1	1
*	81028220	UNDERGROUND CONDUIT, GALVANIZED STEEL, 3" DIA.	FOOT	3857	3857
*	81028240	UNDERGROUND CONDUIT, GALVANIZED STEEL, 4" DIA.	FOOT	1239	1239
*	81028350	UNDERGROUND CONDUIT, PVC, 2" DIA.	FOOT	4590	4590
*	81028370	UNDERGROUND CONDUIT, PVC, 3" DIA.	FOOT	823	823
*	81028390	UNDERGROUND CONDUIT, PVC, 4" DIA.	FOOT	855	855
*	81100300	CONDUIT ATTACHED TO STRUCTURE, 1" DIA., GALVANIZED STEEL	FOOT	630	630
*	81300220	JUNCTION BOX, STAINLESS STEEL, ATTACHED TO STRUCTURE, 6" X 6' X 4"	EACH	16	16
*	81300530	JUNCTION BOX, STAINLESS STEEL, ATTACHED TO STRUCTURE, 12" X 10" X 6"	EACH	2	2
*	81300720	JUNCTION BOX, STAINLESS STEEL, ATTACHED TO STRUCTURE, 16" X 12" X 8"	EACH	2	2
*	81300830	JUNCTION BOX, STAINLESS STEEL, ATTACHED TO STRUCTURE, 18" X 18" X 8"	EACH	2	2
*	81400700	HANDHOLE, PORTLAND CEMENT CONCRETE	EACH	21	21
*	81400720	DOUBLE HANDHOLE, PORTLAND CEMENT CONCRETE	EACH	2	2
*	81603032	UNIT DUCT, 600V, 2-1C NO.4, 1/C NO.6 GROUND, (XLP-TYPE USE), 1 1/4" DIA. POLYETHYLENE	FOOT	17849	17849

* SPECIALTY ITEM

REV - MS

	CODE NO.	ITEM	UNIT	TOTAL QUANTITY	CONSTR. CODE ROADWAY 0003 URBAN
*	81603070	ELECTRIC CABLE IN CONDUIT, 600V (EPR-TYPE RHW) 3-1C NO. 2	FOOT	385	385
*	81702110	ELECTRIC CABLE IN CONDUIT, 600V (XLP-TYPE USE) 1/C NO. 10	FOOT	2750	2750
*	81702130	ELECTRIC CABLE IN CONDUIT, 600V (XLP-TYPE USE) 1/C NO. 6	FOOT	5166	5166
*	81702160	ELECTRIC CABLE IN CONDUIT, 600V (XLP-TYPE USE) 1/C NO. 1/0	FOOT	300	300
*	82110008	LUMINAIRE, LED, ROADWAY, OUTPUT DESIGNATION H	EACH	69	69
*	82110018	LUMINAIRE, LED, HIGHMAST, OUTPUT DESIGNATION K	EACH	6	6
*	82110026	LUMINAIRE, LED, UNDERPASS, SUSPENDED, OUTPUT DESIGNATION D	EACH	16	16
*	82500360	LIGHTING CONTROLLER, BASE MOUNTED, 480VOLT, 100AMP	EACH	2	2
*	83004500	LIGHT POLE, ALUMINUM, 50 FT. M.H., 12 FT. DAVIT ARM	EACH	28	28
*	83004600	LIGHT POLE, ALUMINUM, 50 FT. M.H., 15 FT. DAVIT ARM	EACH	41	41
*	83502200	LIGHT TOWER, 100 FT. MOUNTING HEIGHT, LUMINAIRE MT. - 3	EACH	2	2
*	83600200	LIGHT POLE FOUNDATION, 24" DIAMETER	FOOT	690	690
*	83700300	LIGHT TOWER FOUNDATION, 48" DIAMETER	FOOT	37	37
*	83800205	BREAKAWAY DEVICE, TRANSFORMER BASE, 15 INCH BOLT CIRCLE	EACH	69	69

	CODE NO.	ITEM	UNIT	TOTAL QUANTITY	CONSTR. CODE ROADWAY 0003 URBAN
	84200600	REMOVAL OF LIGHTING UNIT, NO SALVAGE	EACH	85	85
	84500110	REMOVAL OF LIGHTING CONTROLLER	EACH	2	2
	84500130	REMOVAL OF LIGHTING CONTROLLER FOUNDATION	EACH	2	2
*	85000200	MAINTENANCE OF EXISTING TRAFFIC SIGNAL INSTALLATION	EACH	2	2
*	86400100	TRANSCEIVER - FIBER OPTIC	EACH	3	3
*	87300925	ELECTRIC CABLE IN CONDUIT, TRACER, NO. 14 1C	FOOT	7386	7386
*	87301215	ELECTRIC CABLE IN CONDUIT, SIGNAL NO. 14 2C	FOOT	2632	2632
*	87301245	ELECTRIC CABLE IN CONDUIT, SIGNAL NO. 14 5C	FOOT	24306	24306
*	87301255	ELECTRIC CABLE IN CONDUIT, SIGNAL NO. 14 7C	FOOT	3225	3225
*	87301900	ELECTRIC CABLE IN CONDUIT, GROUNDING NO. 6 1C	FOOT	4686	4686
*	87500900	TRAFFIC SIGNAL POST, 13 FT.	EACH	4	4
*	87501000	TRAFFIC SIGNAL POST, 14 FT.	EACH	8	8
*	87501100	TRAFFIC SIGNAL POST, 15 FT.	EACH	4	4

* SPECIALTY ITEM

REV - MS

	CODE NO.	ITEM	UNIT	TOTAL QUANTITY	CONSTR. CODE ROADWAY 0003 URBAN
*	87700220	STEEL MAST ARM ASSEMBLY AND POLE, 36 FT.	EACH	2	2
*	87700230	STEEL MAST ARM ASSEMBLY AND POLE, 38 FT.	EACH	2	2
*	87700240	STEEL MAST ARM ASSEMBLY AND POLE, 40 FT.	EACH	2	2
*	87700300	STEEL MAST ARM ASSEMBLY AND POLE, 52 FT.	EACH	2	2
*	87700320	STEEL MAST ARM ASSEMBLY AND POLE, 55 FT.	EACH	1	1
*	87800100	CONCRETE FOUNDATION, TYPE A	FOOT	64	64
*	87800200	CONCRETE FOUNDATION, TYPE D	FOOT	3	3
*	87800415	CONCRETE FOUNDATION, TYPE E 36-INCH DIAMETER	FOOT	115	115
*	87900200	DRILL EXISTING HANDHOLE	EACH	10	10
*	87900205	DRILL EXISTING HEAVY DUTY HANDHOLE	EACH	3	3
*	88040070	SIGNAL HEAD, POLYCARBONATE, LED, 1-FACE, 3-SECTION, BRACKET MOUNTED	EACH	16	16
*	88040090	SIGNAL HEAD, POLYCARBONATE, LED, 1-FACE, 3-SECTION, MAST ARM MOUNTED	EACH	18	18
*	88040110	SIGNAL HEAD, POLYCARBONATE, LED, 1-FACE, 4-SECTION, BRACKET MOUNTED	EACH	4	4
*	88200400	TRAFFIC SIGNAL BACKPLATE, FORMED PLASTIC	EACH	18	18

	CODE NO.	ITEM	UNIT	TOTAL QUANTITY	CONSTR. CODE ROADWAY 0003 URBAN
*	89500100	RELOCATE EXISTING SIGNAL HEAD	EACH	4	4
*	89502200	MODIFY EXISTING CONTROLLER	EACH	2	2
*	89502350	REMOVE AND REINSTALL ELECTRIC CABLE FROM CONDUIT	FOOT	1014	1014
*	89502375	REMOVE EXISTING TRAFFIC SIGNAL EQUIPMENT	EACH	1	1
	89502380	REMOVE EXISTING HANDHOLE	EACH	10	10
	89502385	REMOVE EXISTING CONCRETE FOUNDATION	EACH	1	1
	X0322278	RODENT SHIELDS	EACH	11	11
	X0326811	ABANDON CONDUIT IN PLACE	EACH	3	3
*	X0326949	CLOSED CIRCUIT TELEVISION CAMERA STRUCTURE FOUNDATION, 30" DIAMETER	FOOT	10	10
	X8420506	REMOVAL OF EXISTING SIGN LIGHTING UNIT WITH NO SALVAGE	EACH	6	6
*	X0327616	MAINTAINING ITS DURING CONSTRUCTION	CAL MO	24	24
*	X0328502	CLOSED CIRCUIT TELEVISION CAMERA STRUCTURE, GALVANIZED STEEL, 50 FT. MOUNTING HEIGHT	EACH	1	1
	X1400013	REMOVAL OF CABLE IN CONDUIT	FOOT	1722	1722

* SPECIALTY ITEM

REV - MS

	CODE NO.	ITEM	UNIT	TOTAL QUANTITY	CONSTR. CODE ROADWAY 0003 URBAN
*	X1400174	REMOVE AND REINSTALL EXISTING CCTV CAMERA AND EQUIPMENT	L SUM	1	1
	X2010310	TREE REMOVAL (SPECIAL)	UNIT	308	308
	X4020500	AGGREGATE SURFACE COURSE, TYPE B 6"	SQ YD	9	9
	X4202005	DIAMOND GRINDING AND GROOVING (ROADWAY SECTION)	SQ YD	46466	46466
	X6024504	INLETS, TYPE B, WITH FRAME AND GRATE (SPECIAL)	EACH	4	4
	X6060101	CLASS SI CONCRETE PIPE UNDER DRAIN OUTLET	CU YD	17	17
	X6640104	FENCE REMOVAL	FOOT	125	125
	X7010216	TRAFFIC CONTROL AND PROTECTION, (SPECIAL)	L SUM	1	1
*	X8100105	CONDUIT SPLICE	EACH	5	5
	X8302151	TEMPORARY WOOD POLE, 50 FT., CLASS 4	EACH	11	11
	X8301804	REMOVAL OF TEMPORARY WOOD POLES AND FIBER OPTIC CABLE	L SUM	1	1
	X8410102	TEMPORARY LIGHTING SYSTEM	L SUM	1	1
	X8570000	SMART TRAFFIC MONITORING SYSTEM	L SUM	1	1
*	X8570231	FULL-ACTUATED CONTROLLER AND TYPE V CABINET, SPECIAL	EACH	1	1

* SPECIALTY ITEM

	CODE NO.	ITEM	UNIT	TOTAL QUANTITY	CONSTR. CODE ROADWAY 0003 URBAN
*	X8620200	UNINTERRUPTABLE POWER SUPPLY, SPECIAL	EACH	1	1
*	X8710318	FIBER OPTIC UTILITY MARKER	EACH	7	7
*	X8710024	FIBER OPTIC CABLE IN CONDUIT, NO. 62.5/125, MM12F SM24F	FOOT	5068	5068
*	X8710075	FIBER OPTIC CABLE IN CONDUIT, 72 COND. S.M. F.O.	FOOT	2880	2880
*	X8710103	ETHERNET SWITCH	EACH	2	2
*	X8891007	VIDEO VEHICLE DETECTION SYSTEM COMPLETE	EACH	2	2
*	X8891503	REMOVE AND REINSTALL VIDEO DETECTION CAMERA	EACH	1	1
	X8900100	TEMPORARY TRAFFIC SIGNAL INSTALLATION (SPECIAL)	EACH	1	1
	X8950510	REMOVE FIBER OPTIC CABLE FROM CONDUIT	FOOT	2880	2880
	Z0023500	FILLING EXISTING CULVERTS	CU YD	69	69
*	Z0033056	OPTIMIZE TRAFFIC SIGNAL SYSTEM	EACH	1	1
*	Z0054406	ROCK FILL - FOUNDATION	CU YD	106	106
Ø	Z0076600	TRAINEES	HOUR	4500	4500
	Z0070100	SURVEY MONUMENT COVER ASSEMBLY	EACH	3	3
Ø	Z0076604	TRAINEES TRAINING PROGRAM GRADUATE	HOUR	4500	4500
	Z0076870	UNDERDRAIN CONNECTION TO STRUCTURE	EACH	29	29

Ø 0042

REV. - MS

MODEL: Default
FILE NAME: pw:\\ildot-pw.bentley.com:PWIDOT\Documents\IDOT Offices\District 8\Project\108768\CADData\CADsheet\108768-8-sht-500.dgn

USER NAME = Jon.Dintelman	DESIGNED - _____	REVISED - _____
	DRAWN - _____	REVISED - _____
PLOT SCALE = 100.0000 ' / in.	CHECKED - _____	REVISED - _____
PLOT DATE = 6/5/2024	DATE - _____	REVISED - _____

STATE OF ILLINOIS
DEPARTMENT OF TRANSPORTATION

SUMMARY OF QUANTITIES

SCALE: _____ SHEET OF __ SHEETS STA. _____ TO STA. _____

F.A.I. RTE.	SECTION	COUNTY	TOTAL SHEETS	SHEET NO.
270	60-3K-1	MADISON	576	12
		CONTRACT NO. 76818		
		ILLINOIS FED. AID PROJECT		

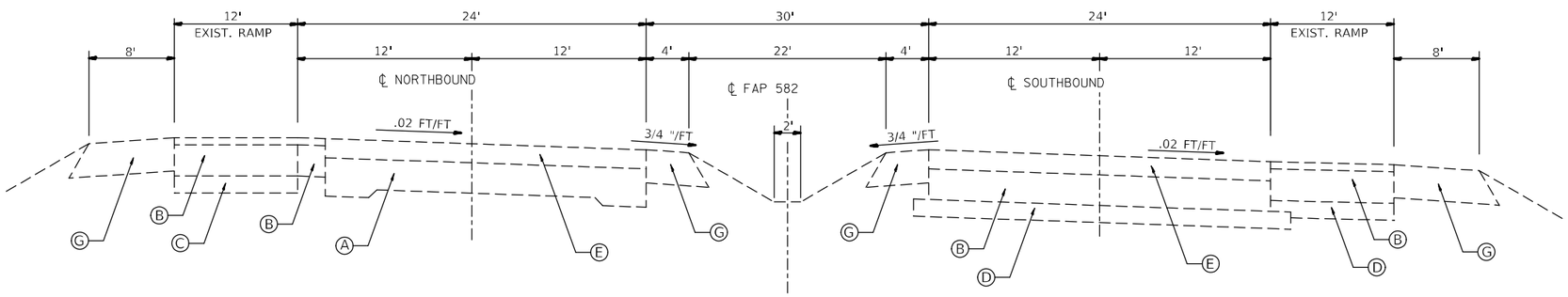

EXISTING TYPICAL SECTION IL 111

STA. 26+84.23 TO STA. 29+20.13
STA. 30+79.87 TO STA. 33+39.04

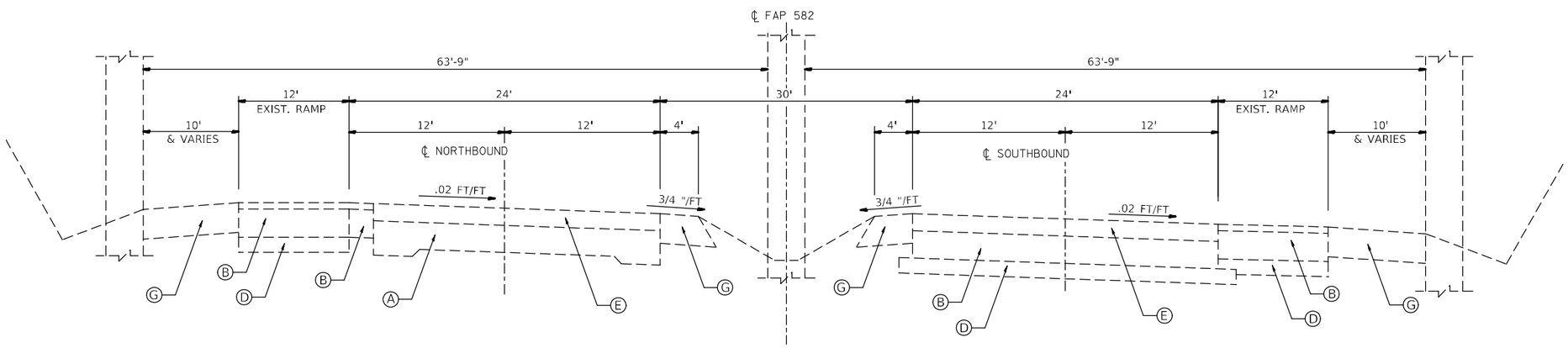

EXISTING TYPICAL SECTION IL 111

STA. 29+20.13 TO STA. 30+79.87

LEGEND

- Ⓐ EXISTING P.C.C. PAVEMENT 10"-8"-10"
- Ⓑ EXISTING P.C.C. PAVEMENT CONCRETE 9"
- Ⓒ EXISTING P.C.C. PAVEMENT CONCRETE 10"
- Ⓓ EXISTING SUB-BASE GRANDULAR MATERIAL 6"
- Ⓔ EXISTING HMA RESURFACING, 3.75"
- Ⓕ EXISTING HMA RESURFACING,
- Ⓖ EXISTING HMA SHOULDERS (6" AND VARIES)
- Ⓗ EXISTING HMA SHOULDERS
- Ⓘ EXISTING CURB & GUTTER, TYPE B-6.06
- Ⓙ EXISTING CONCRETE MEDIAN SURFACE, 4"
- Ⓚ EXISTING PIPE UNDERDRAINS
- Ⓛ EXISTING AGGREGATE SHOULDERS

REV - MS

MODEL: Default
FILE NAME: pw:\\ildot-pw.bentley.com:PWIDOT\Documents\IDOT Offices\District 8\Projects\087688\CADData\CADsheets\087688-sht-typical.dgn

USER NAME = Jon.Dintelman	DESIGNED -	REVISED -	
	DRAWN -	REVISED -	
PLOT SCALE = 100.0000 ' / in.	CHECKED -	REVISED -	
PLOT DATE = 5/4/2024	DATE -	REVISED -	

STATE OF ILLINOIS
DEPARTMENT OF TRANSPORTATION

EXISTING TYPICAL SECTIONS IL 111

SCALE: | SHEET 2 OF 5 SHEETS | STA. TO STA.

F.A.I. RTE.	SECTION	COUNTY	TOTAL SHEETS	SHEET NO.
270	60-3K-1	MADISON	576	13
		CONTRACT NO. 76818		
		ILLINOIS	FED. AID PROJECT	

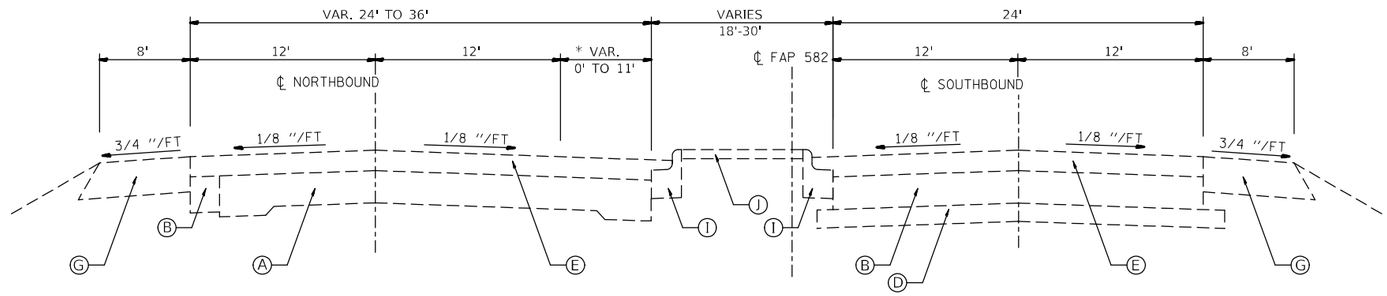

EXISTING TYPICAL SECTION IL 111

STA. 17+25.00 TO STA. 21+84.21

* LEFT TURN LANE TAPER: STA. 19+66.42 (12') TO STA. 21+66.20 (0')

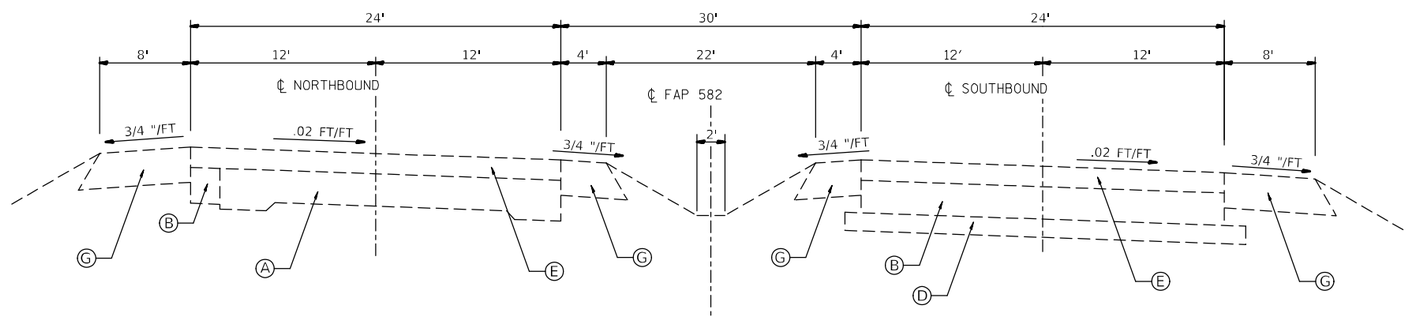

EXISTING TYPICAL SECTION IL 111

STA. 21+84.21 TO STA. 26+84.23

STA. 33+39.04 TO STA. 40+90.32

LEGEND

- (A) EXISTING P.C.C. PAVEMENT 10"-8"-10"
- (B) EXISTING P.C.C. PAVEMENT CONCRETE 9"
- (C) EXISTING P.C.C. PAVEMENT CONCRETE 10"
- (D) EXISTING SUB-BASE GRANDULAR MATERIAL 6"
- (E) EXISTING HMA RESURFACING, 3.75"
- (F) EXISTING HMA RESURFACING,
- (G) EXISTING HMA SHOULDERS (6" AND VARIES)
- (H) EXISTING HMA SHOULDERS
- (I) EXISTING CURB & GUTTER, TYPE B-6.06
- (J) EXISTING CONCRETE MEDIAN SURFACE, 4"
- (K) EXISTING PIPE UNDERDRAINS
- (L) EXISTING AGGREGATE SHOULDERS

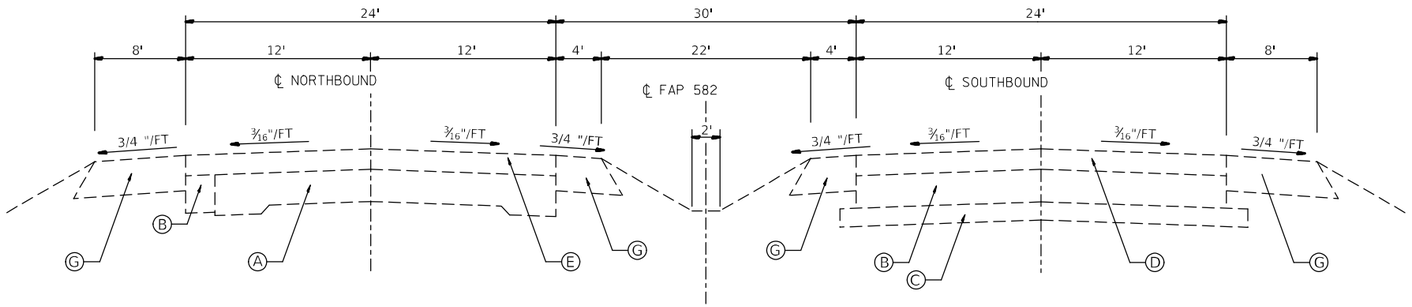

EXISTING TYPICAL SECTION IL 111

STA. 40+90.32 TO STA. 48+00.00

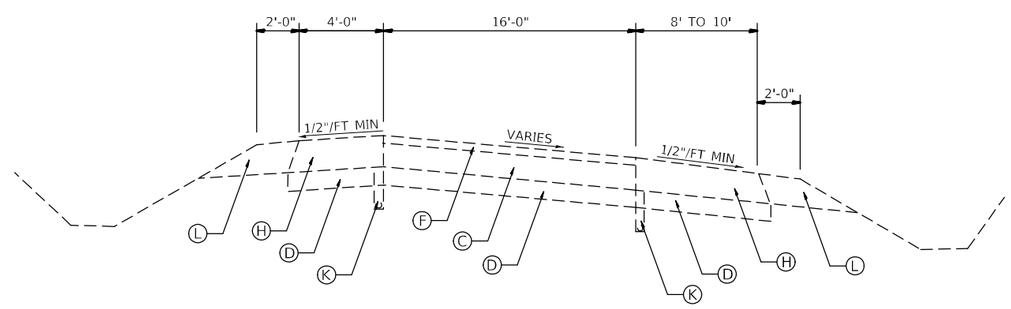

EXISTING TYPICAL SECTION RAMPS

LEGEND

- Ⓐ EXISTING P.C.C. PAVEMENT 10"-8"-10"
- Ⓑ EXISTING P.C.C. PAVEMENT CONCRETE 9"
- Ⓒ EXISTING P.C.C. PAVEMENT CONCRETE 10"
- Ⓓ EXISTING SUB-BASE GRANDULAR MATERIAL 6"
- Ⓔ EXISTING HMA RESURFACING, 3.75"
- Ⓕ EXISTING HMA RESURFACING,
- Ⓖ EXISTING HMA SHOULDERS (6" AND VARIES)
- Ⓗ EXISTING HMA SHOULDERS
- Ⓘ EXISTING CURB & GUTTER, TYPE B-6.06
- Ⓙ EXISTING CONCRETE MEDIAN SURFACE, 4"
- Ⓚ EXISTING PIPE UNDERDRAINS
- Ⓛ EXISTING AGGREGATE SHOULDERS

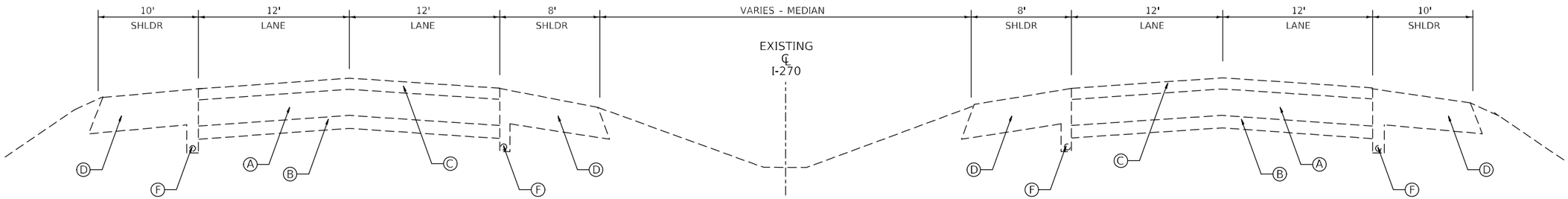

EXISTING TYPICAL SECTION I-270

EASTBOUND
STA. 345+00.00 TO STA. 399+76.00
WESTBOUND
STA. 345+00.00 TO STA. 399+97.00

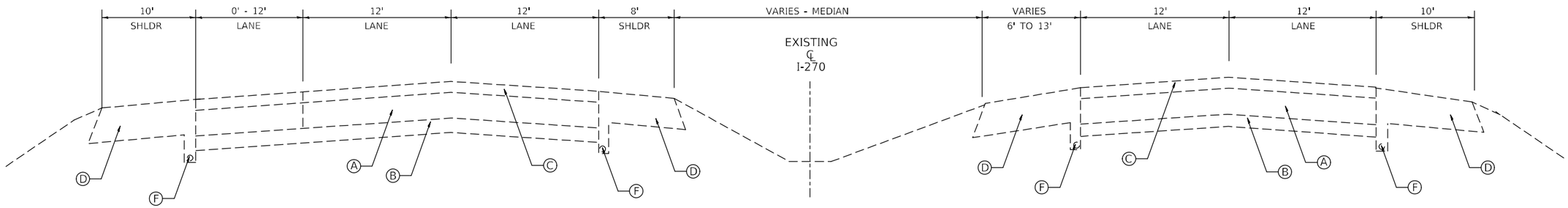

EXISTING TYPICAL SECTION I-270

EASTBOUND
STA. 402+92.00 TO STA. 405+80.00
WESTBOUND
STA. 403+11.00 TO 412+30.00

LEGEND

- Ⓐ EXISTING P.C.C. PAVEMENT CONCRETE 10"
- Ⓑ EXISTING SUB-BASE GRANDULAR MATERIAL 6"
- Ⓒ EXISTING HMA RESURFACING,
- Ⓓ EXISTING HMA SHOULDERS
- Ⓔ EXISTING HMA RESURFACING, 3.75"
- Ⓕ EXISTING PIPE UNDERDRAINS

USER NAME = Jon.Dintelman	DESIGNED -	REVISED -	
	DRAWN -	REVISED -	
PLOT SCALE = 100.0000 ' / in.	CHECKED -	REVISED -	
PLOT DATE = 5/4/2024	DATE -	REVISED -	

STATE OF ILLINOIS
DEPARTMENT OF TRANSPORTATION

EXISTING TYPICAL SECTIONS I-270

SCALE: | SHEET 4 OF 5 SHEETS | STA. TO STA.

F.A.I. RTE.	SECTION	COUNTY	TOTAL SHEETS	SHEET NO.
270	60-3K-1	MADISON	576	16
		CONTRACT NO. 76818		
		ILLINOIS	FED. AID PROJECT	

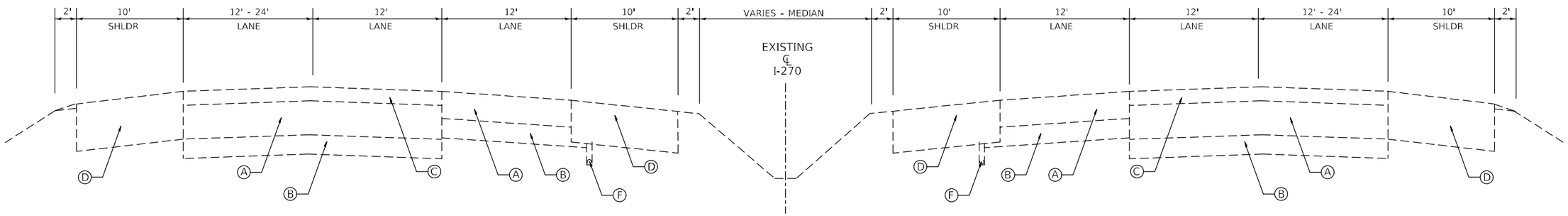

EXISTING TYPICAL SECTION I-270

EASTBOUND
STA. 405+80 TO STA. 425+00.00
WESTBOUND
STA. 408+00 TO STA. 425+00.00

LEGEND

- Ⓐ EXISTING P.C.C. PAVEMENT CONCRETE 10"
- Ⓑ EXISTING SUB-BASE GRANDULAR MATERIAL 6"
- Ⓒ EXISTING HMA RESURFACING,
- Ⓓ EXISTING HMA SHOULDERS
- Ⓔ EXISTING HMA RESURFACING, 3.75"
- Ⓕ EXISTING PIPE UNDERDRAINS

MODEL: Default
FILE NAME: pw:\\ildot-pw.bentley.com:PWIDOT\Documents\IDOT Offices\District 8\projects\0876318\CADData\CADsheets\0876318-sht-typical.dgn

USER NAME = Jon.Dintelman	DESIGNED -	REVISED -	
	DRAWN -	REVISED -	
PLOT SCALE = 100.0000 ' / in.	CHECKED -	REVISED -	
PLOT DATE = 5/4/2024	DATE -	REVISED -	

STATE OF ILLINOIS
DEPARTMENT OF TRANSPORTATION

EXISTING TYPICAL SECTIONS I–270

SCALE: | SHEET 5 OF 5 SHEETS | STA. | TO STA.

F.A.I. RTE.	SECTION	COUNTY	TOTAL SHEETS	SHEET NO.
270	60-3K-1	MADISON	576	17

CONTRACT NO. 76818

ILLINOIS | FED. AID PROJECT

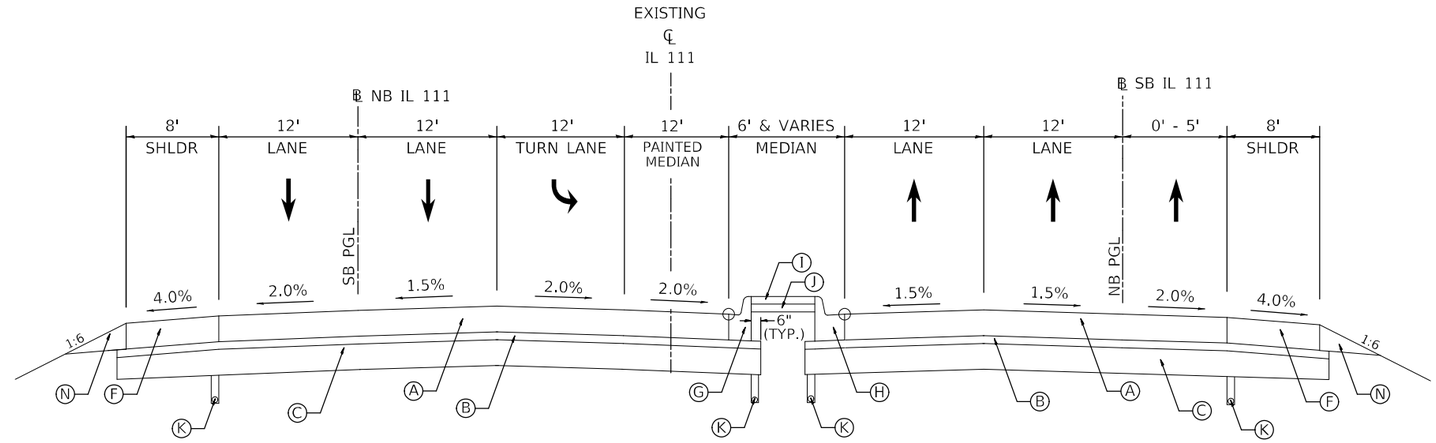

PROPOSED TYPICAL SECTION IL 111

STA. 17+87.52 TO STA. 19+51.76

NB STA. 617+85.76 TO NB STA. 619+50.00

SB STA. 517+87.52 TO SB STA. 519+71.76

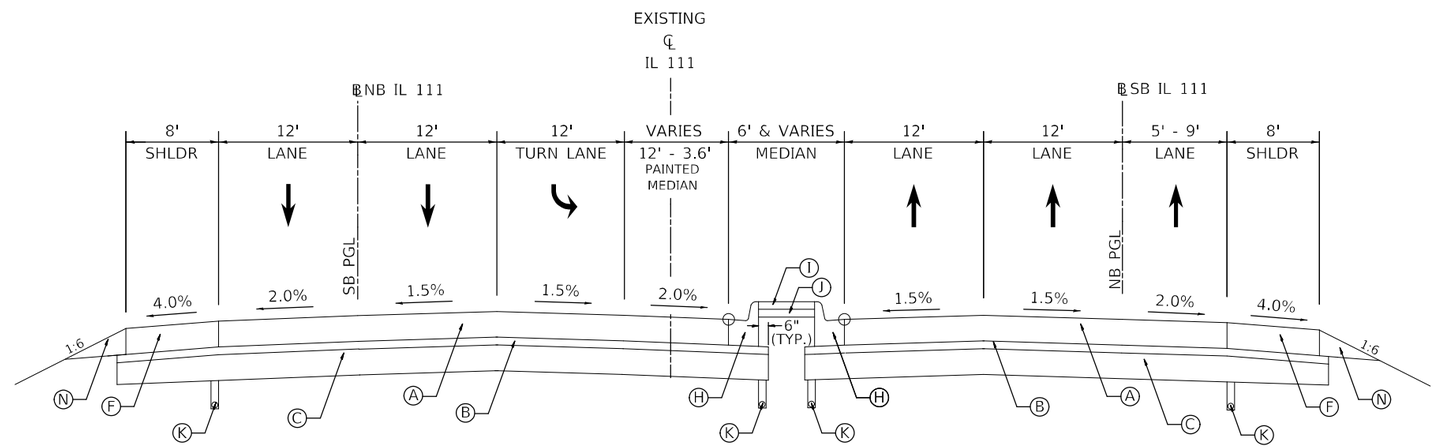

PROPOSED TYPICAL SECTION IL 111

STA. 19+51.76 TO STA. 20+71.26

NB STA. 619+50.00 TO NB STA. 620+69.85

SB STA. 517+87.52 TO SB STA. 520+71.62

LEGEND

- Ⓐ PROPOSED PORTLAND CEMENT CONCRETE PAVEMENT, 11" (JOINTED)
- Ⓑ PROPOSED STABILIZED SUBBASE - HMA, 4"
- Ⓒ PROPOSED AGGREGATE SUBGRADE IMPROVEMENT,12"
- Ⓓ PROPOSED BINDER COURSE, 2 $\frac{1}{4}$"
- Ⓔ PROPOSED HMA SURFACE COURSE, 1 $\frac{1}{2}$"
- Ⓕ PROPOSED P.C.C SHOULDERS. 11"
- Ⓖ PROPOSED COMB. CONCRETE CURB AND GUTTER, TYPE B-6.06
- Ⓗ PROPOSED COMB. CONCRETE CURB AND GUTTER, TYPE B-6.24
- Ⓘ PROPOSED CONCRETE MEDIAN SURFACE, 4"
- Ⓙ PROPOSED AGGREGATE BASE COURSE, 4"
- Ⓚ PROPOSED AGGREGATE SHOULDER, TYPE A" PROPOSED PIPE UNDERDRAINS, 4"
- Ⓛ PROPOSED POLYMERIZED BITUMINOUS MATERIALS (TACK COAT)
- Ⓜ PROPOSED CONCRETE STRUCTURES
- Ⓝ PROPOSED AGGREGATE WEDGE, TYPE B
- Ⓞ PROPOSED STONE RIPRAP, CLASS A3

MODEL: Default
FILE NAME: pw:\\ildot-pw.bentley.com:PWIDOT\Documents\IDOT Offices\District 8\Project\087681B\CADData\CADsheets\087681B-sht-typlt-il.dgn

USER NAME = Jon.Dintelman	DESIGNED -	REVISED -	
	DRAWN -	REVISED -	
PLOT SCALE = 100.0000 ' / in.	CHECKED -	REVISED -	
PLOT DATE = 5/4/2024	DATE -	REVISED -	

STATE OF ILLINOIS
DEPARTMENT OF TRANSPORTATION

PROPOSED TYPICAL SECTIONS

SCALE: | SHEET 1 OF 15 SHEETS | STA. TO STA.

F.A.I. RTE.	SECTION	COUNTY	TOTAL SHEETS	SHEET NO.
270	60-3K-1	MADISON	576	18
		CONTRACT NO. 76818		
		ILLINOIS	FED. AID PROJECT	

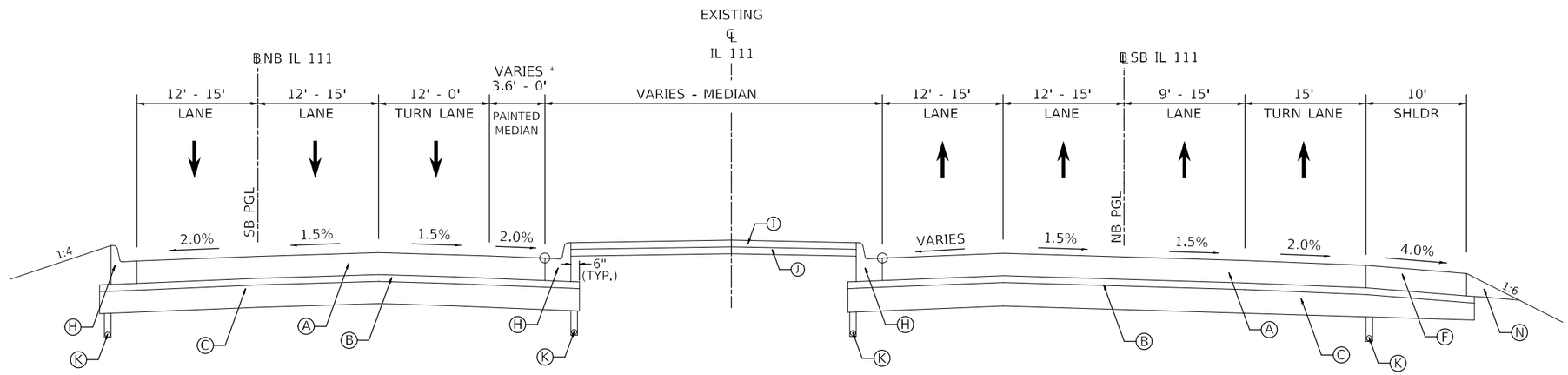

PROPOSED TYPICAL SECTION IL 111

STA. 20+71.26 TO STA. 22+56.20

NB STA. 619+50.00 TO NB STA. 622+50.00

SB STA. 520+71.62 TO SB STA. 522+50.53

*VARIES 3.6' - 0' FROM STATION 20+71.26 TO 21+19.56

LEGEND

- Ⓐ PROPOSED PORTLAND CEMENT CONCRETE PAVEMENT, 11" (JOINTED)
- Ⓑ PROPOSED STABILIZED SUBBASE - HMA, 4"
- Ⓒ PROPOSED AGGREGATE SUBGRADE IMPROVEMENT,12"
- Ⓓ PROPOSED BINDER COURSE, 2 $\frac{1}{4}$"
- Ⓔ PROPOSED HMA SURFACE COURSE, 1 $\frac{1}{2}$"
- Ⓕ PROPOSED P.C.C SHOULDERS. 11"
- Ⓖ PROPOSED COMB. CONCRETE CURB AND GUTTER, TYPE B-6.06
- Ⓗ PROPOSED COMB. CONCRETE CURB AND GUTTER, TYPE B-6.24
- Ⓘ PROPOSED CONCRETE MEDIAN SURFACE, 4"
- Ⓙ PROPOSED AGGREGATE BASE COURSE, 4"
- Ⓚ PROPOSED AGGREGATE SHOULDER, TYPE A" PROPOSED PIPE UNDERDRAINS, 4"
- Ⓛ PROPOSED POLYMERIZED BITUMINOUS MATERIALS (TACK COAT)
- Ⓜ PROPOSED CONCRETE STRUCTURES
- Ⓝ PROPOSED AGGREGATE WEDGE, TYPE B
- Ⓞ PROPOSED STONE RIPRAP, CLASS A3

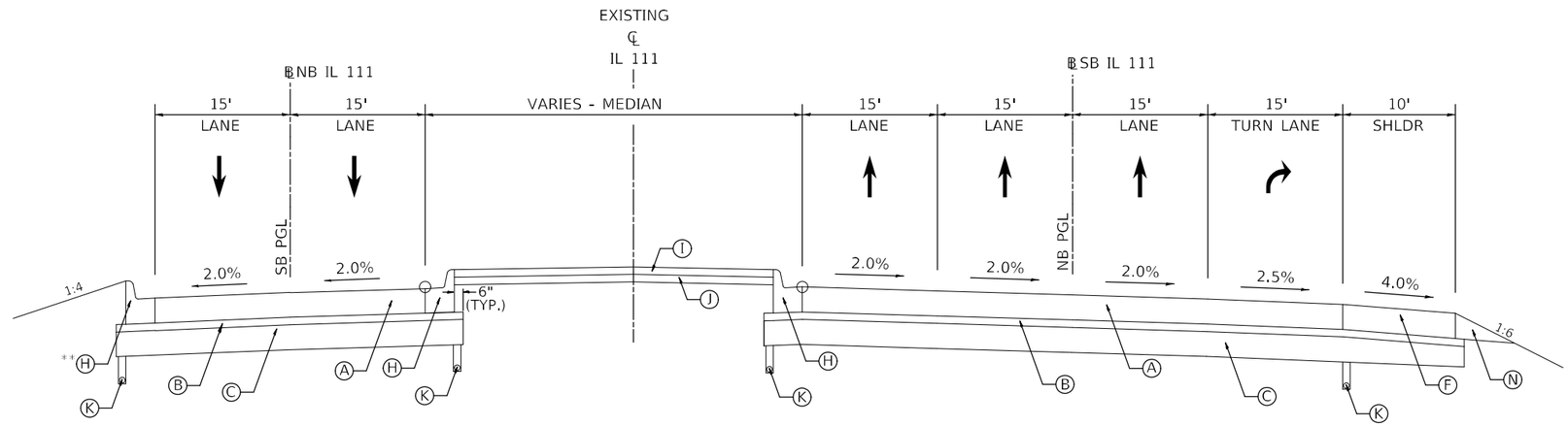

PROPOSED TYPICAL SECTION IL 111

STA. 22+56.26 TO STA. 24+02.60

NB STA. 622+50.00 TO STA. 623+61.47

SB STA. 522+50.53 TO STA. 523+95.84

*VARIES 3.6' - 0' FROM STATION 20+71.26 TO 21+19.56

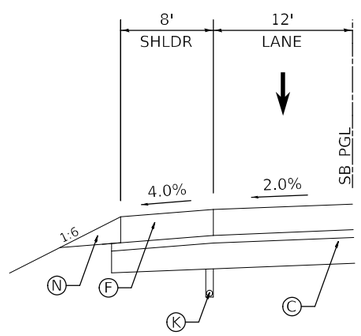

**NB STA. 623+27.21 TO STA. 623+61.47

LEGEND

- Ⓐ PROPOSED PORTLAND CEMENT CONCRETE PAVEMENT, 11" (JOINTED)
- Ⓑ PROPOSED STABILIZED SUBBASE - HMA, 4"
- Ⓒ PROPOSED AGGREGATE SUBGRADE IMPROVEMENT,12"
- Ⓓ PROPOSED BINDER COURSE, 2 $\frac{1}{4}$"
- Ⓔ PROPOSED HMA SURFACE COURSE, 1 $\frac{1}{2}$"
- Ⓕ PROPOSED P.C.C SHOULDERS. 11"
- Ⓖ PROPOSED COMB. CONCRETE CURB AND GUTTER, TYPE B-6.06
- Ⓗ PROPOSED COMB. CONCRETE CURB AND GUTTER, TYPE B-6.24
- Ⓘ PROPOSED CONCRETE MEDIAN SURFACE, 4"
- Ⓙ PROPOSED AGGREGATE BASE COURSE, 4"
- Ⓚ PROPOSED AGGREGATE SHOULDER, TYPE A" PROPOSED PIPE UNDERDRAINS, 4"
- Ⓛ PROPOSED POLYMERIZED BITUMINOUS MATERIALS (TACK COAT)
- Ⓜ PROPOSED CONCRETE STRUCTURES
- Ⓝ PROPOSED AGGREGATE WEDGE, TYPE B
- Ⓞ PROPOSED STONE RIPRAP, CLASS A3

NOTE:

1. ALL LANE TAPERS ARE BASED ON PROPOSED IL 111 NB AND PROPOSED IL 111 SB BASELINES. TYPICAL SECTIONS STATIONS FOR IL 111 ARE PROVIDED FROM THE EXISTING IL 111 CENTERLINE.

MODEL: Default
FILE NAME: pw://ildot-pw.bentley.com:PWIDOT\Documents\IDOT Offices\District 8\Projects\087618\CADData\CADsheets\087618-sht-typical.dgn

USER NAME = Jon.Dintelman	DESIGNED -	REVISED -	STATE OF ILLINOIS DEPARTMENT OF TRANSPORTATION
	DRAWN -	REVISED -	
PLOT SCALE = 100.0000 ' / in.	CHECKED -	REVISED -	
PLOT DATE = 5/4/2024	DATE -	REVISED -	

PROPOSED TYPICAL SECTIONS

SCALE: | SHEET 3 OF 15 SHEETS | STA. TO STA.

F.A.I. RTE.	SECTION	COUNTY	TOTAL SHEETS	SHEET NO.
270	60-3K-1	MADISON	576	20
		CONTRACT NO. 76818		
		ILLINOIS	FED. AID PROJECT	

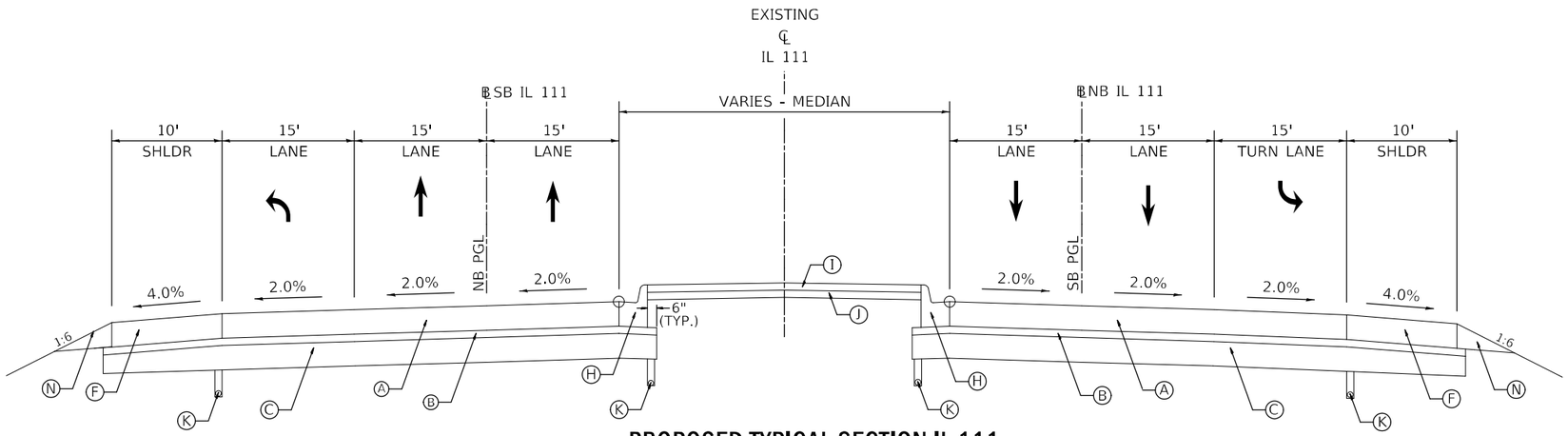

PROPOSED TYPICAL SECTION IL 111

STA. 26+84.23 TO STA. 28+46.23

NB STA. 627+08.44TO STA. 628+63.00

SB STA. 527+31.62 TO STA. 528+33.76

OMISSION: STA. 24+02.60 TO STA. 26+84.23 (IL 111 & INTERSTATE RAMPS INTERSECTION)

NOTE:

1. ALL LANE TAPERS ARE BASED ON PROPOSED IL 111 NB AND PROPOSED IL 111 SB BASELINES. TYPICAL SECTIONS STATIONS FOR IL 111 ARE PROVIDED FROM THE EXISTING IL 111 CENTERLINE.

LEGEND

- Ⓐ PROPOSED PORTLAND CEMENT CONCRETE PAVEMENT, 11" (JOINTED)
- Ⓑ PROPOSED STABILIZED SUBBASE - HMA, 4"
- Ⓒ PROPOSED AGGREGATE SUBGRADE IMPROVEMENT,12"
- Ⓓ PROPOSED BINDER COURSE, 2 $\frac{1}{4}$"
- Ⓔ PROPOSED HMA SURFACE COURSE, 1 $\frac{1}{2}$"
- Ⓕ PROPOSED P.C.C SHOULDERS. 11"
- Ⓖ PROPOSED COMB. CONCRETE CURB AND GUTTER, TYPE B-6.06
- Ⓗ PROPOSED COMB. CONCRETE CURB AND GUTTER, TYPE B-6.24
- Ⓘ PROPOSED CONCRETE MEDIAN SURFACE, 4"
- Ⓙ PROPOSED AGGREGATE BASE COURSE, 4"
- Ⓚ PROPOSED AGGREGATE SHOULDER, TYPE A" PROPOSED PIPE UNDERDRAINS, 4"
- Ⓛ PROPOSED POLYMERIZED BITUMINOUS MATERIALS (TACK COAT)
- Ⓜ PROPOSED CONCRETE STRUCTURES
- Ⓝ PROPOSED AGGREGATE WEDGE, TYPE B
- Ⓞ PROPOSED STONE RIPRAP, CLASS A3

MODEL: Default
FILE NAME: pw:\\ildot-pw.bentley.com:PWIDOT\Documents\IDOT Offices\District 8\Projects\D87681B\CADData\CADsheets\D87681B-sht-typical.dgn

USER NAME = Jon.Dintelman	DESIGNED -	REVISED -	STATE OF ILLINOIS DEPARTMENT OF TRANSPORTATION
	DRAWN -	REVISED -	
PLOT SCALE = 100.0000 ' / in.	CHECKED -	REVISED -	
PLOT DATE = 5/4/2024	DATE -	REVISED -	

PROPOSED TYPICAL SECTIONS

SCALE: SHEET 4 OF 15 SHEETS STA. TO STA.

F.A.I. RTE.	SECTION	COUNTY	TOTAL SHEETS	SHEET NO.
270	60-3K-1	MADISON	576	21
		CONTRACT NO. 76818		
		ILLINOIS	FED. AID PROJECT	

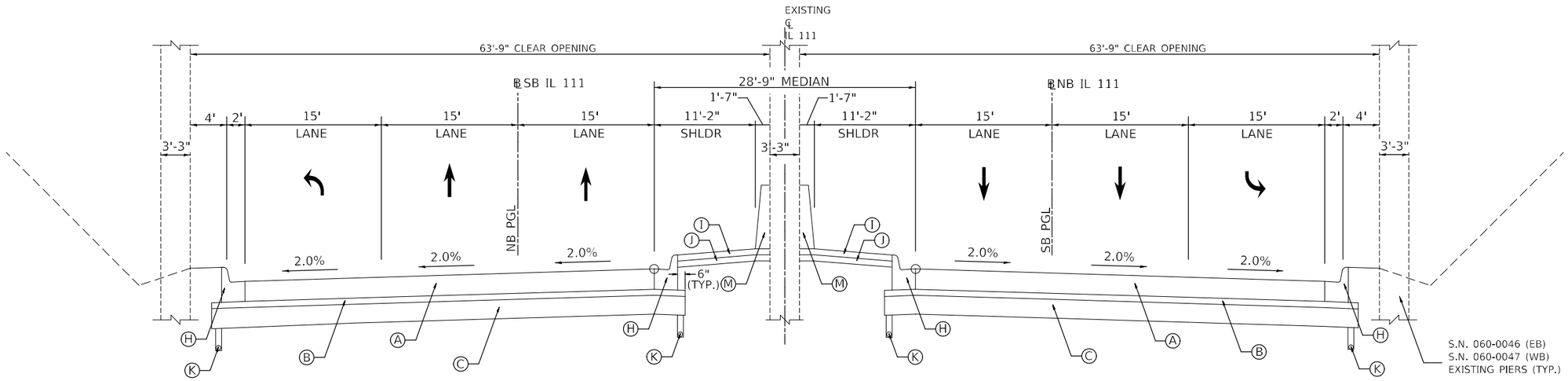

PROPOSED TYPICAL SECTION IL 111

STA. 28+63.00 TO STA. 31+48.88

NB STA. STA. 628+63.00 TO 631+98.94

SB STA. 528+33.76 TO STA. 531+75.57

LEGEND

- Ⓐ PROPOSED PORTLAND CEMENT CONCRETE PAVEMENT, 11" (JOINTED)
- Ⓑ PROPOSED STABILIZED SUBBASE - HMA, 4"
- Ⓒ PROPOSED AGGREGATE SUBGRADE IMPROVEMENT,12"
- Ⓓ PROPOSED BINDER COURSE, 2 $\frac{1}{4}$"
- Ⓔ PROPOSED HMA SURFACE COURSE, 1 $\frac{1}{2}$"
- Ⓕ PROPOSED P.C.C SHOULDERS. 11"
- Ⓖ PROPOSED COMB. CONCRETE CURB AND GUTTER, TYPE B-6.06
- Ⓗ PROPOSED COMB. CONCRETE CURB AND GUTTER, TYPE B-6.24
- Ⓘ PROPOSED CONCRETE MEDIAN SURFACE, 4"
- Ⓙ PROPOSED AGGREGATE BASE COURSE, 4"
- Ⓚ PROPOSED AGGREGATE SHOULDER, TYPE A" PROPOSED PIPE UNDERDRAINS, 4"
- Ⓛ PROPOSED POLYMERIZED BITUMINOUS MATERIALS (TACK COAT)
- Ⓜ PROPOSED CONCRETE STRUCTURES
- Ⓝ PROPOSED AGGREGATE WEDGE, TYPE B
- Ⓞ PROPOSED STONE RIPRAP, CLASS A3

MODEL: Default
FILE NAME: pw:\\ildot-pw.bentley.com:PWIDOT\Documents\IDOT Offices\District 8\Projects\D87681B\CADData\CADsheets\D87681B-sht-typical.dgn

USER NAME = Jon.Dintelman	DESIGNED -	REVISED -	STATE OF ILLINOIS DEPARTMENT OF TRANSPORTATION
	DRAWN -	REVISED -	
PLOT SCALE = 100.0000 ' / in.	CHECKED -	REVISED -	
PLOT DATE = 5/4/2024	DATE -	REVISED -	

PROPOSED TYPICAL SECTIONS

SCALE: SHEET 5 OF 15 SHEETS STA. TO STA.

F.A.I. RTE.	SECTION	COUNTY	TOTAL SHEETS	SHEET NO.
270	60-3K-1	MADISON	576	22

CONTRACT NO. 76818

ILLINOIS FED. AID PROJECT

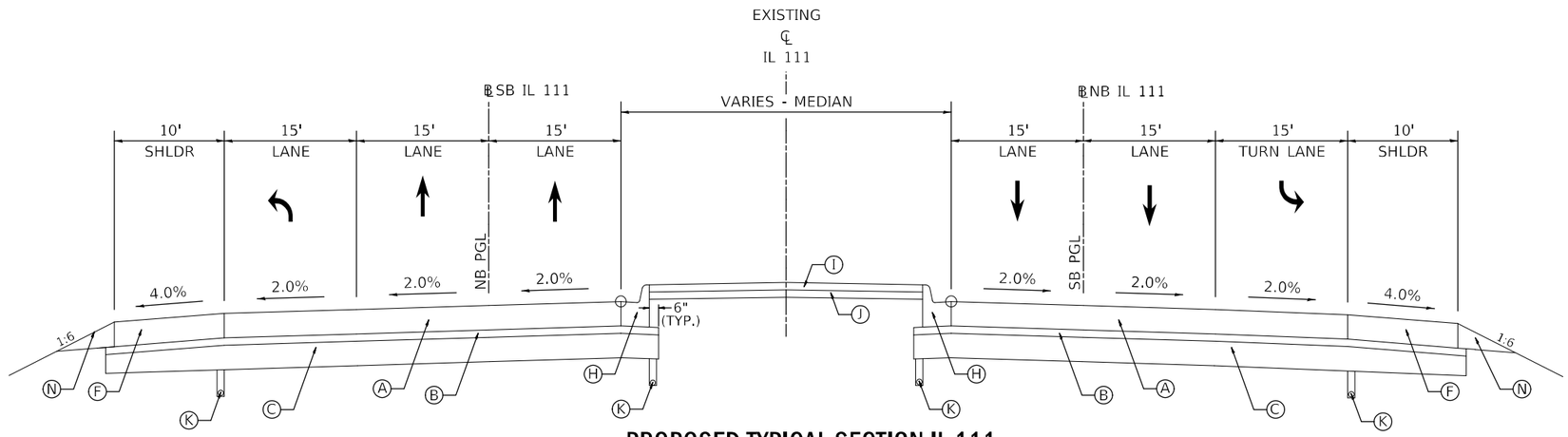

PROPOSED TYPICAL SECTION IL 111

STA. 31+48.88 TO STA. 33+10.00

NB STA. STA. 631+98.94 TO STA. 633+43.33

SB STA. 531+75.57 TO STA. 533+31.92

OMISSION: STA. 33+10.01 TO STA. 36+25.49 (IL 111 & INTERSTATE RAMPS INTERSECTION)

NOTE:

1. ALL LANE TAPERS ARE BASED ON PROPOSED IL 111 NB AND PROPOSED IL 111 SB BASELINES. TYPICAL SECTIONS STATIONS FOR IL 111 ARE PROVIDED FROM THE EXISTING IL 111 CENTERLINE.

LEGEND

- (A) PROPOSED PORTLAND CEMENT CONCRETE PAVEMENT, 11" (JOINTED)
- (B) PROPOSED STABILIZED SUBBASE - HMA, 4"
- (C) PROPOSED AGGREGATE SUBGRADE IMPROVEMENT,12"
- (D) PROPOSED BINDER COURSE, 2 $\frac{1}{4}$"
- (E) PROPOSED HMA SURFACE COURSE, 1 $\frac{1}{2}$"
- (F) PROPOSED P.C.C SHOULDERS. 11"
- (G) PROPOSED COMB. CONCRETE CURB AND GUTTER, TYPE B-6.06
- (H) PROPOSED COMB. CONCRETE CURB AND GUTTER, TYPE B-6.24
- (I) PROPOSED CONCRETE MEDIAN SURFACE, 4"
- (J) PROPOSED AGGREGATE BASE COURSE, 4"
- (K) PROPOSED AGGREGATE SHOULDER, TYPE A" PROPOSED PIPE UNDERDRAINS, 4"
- (L) PROPOSED POLYMERIZED BITUMINOUS MATERIALS (TACK COAT)
- (M) PROPOSED CONCRETE STRUCTURES
- (N) PROPOSED AGGREGATE WEDGE, TYPE B
- (0) PROPOSED STONE RIPRAP, CLASS A3

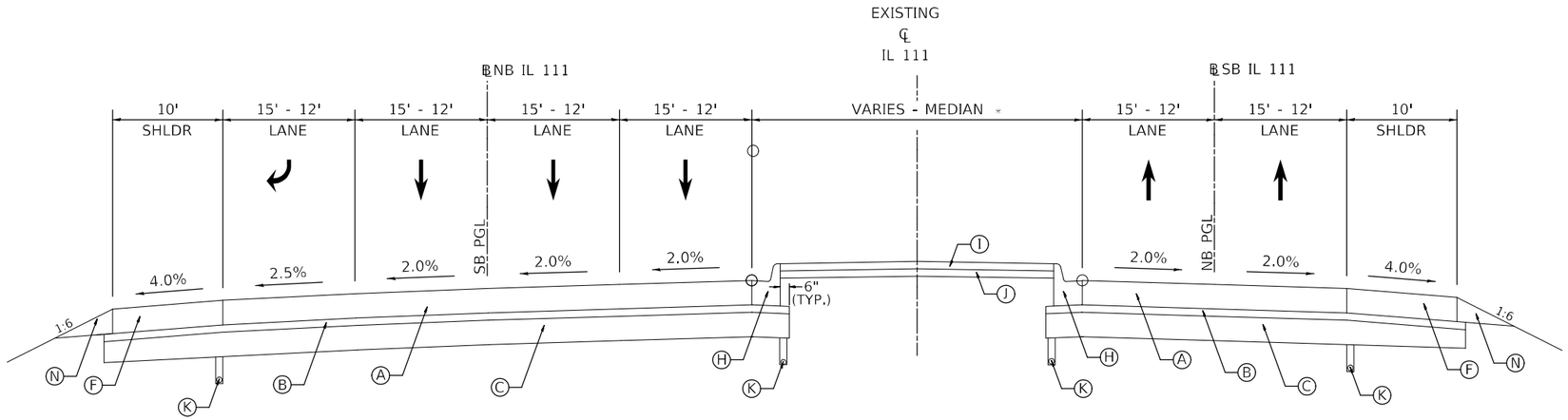

PROPOSED TYPICAL SECTION IL 111

STA. 36+25.64 TO STA. 41+25.19

NB STA. STA. 633+43.33 TO STA. 641+67.38

SB STA. 533+31.92 TO STA. 541+66.61

*FULL 30' MEDIAN OBTAINED AT STA. 40+85.17

OMISSION: STA. 33+25.49 TO STA. 36+25.64 (IL 111 & INTERSTATE RAMPS INTERSECTION)

LEGEND

- Ⓐ PROPOSED PORTLAND CEMENT CONCRETE PAVEMENT, 11" (JOINTED)
- Ⓑ PROPOSED STABILIZED SUBBASE - HMA, 4"
- Ⓒ PROPOSED AGGREGATE SUBGRADE IMPROVEMENT,12"
- Ⓓ PROPOSED BINDER COURSE, 2 $\frac{1}{4}$"
- Ⓔ PROPOSED HMA SURFACE COURSE, 1 $\frac{1}{2}$"
- Ⓕ PROPOSED P.C.C SHOULDERS. 11"
- Ⓖ PROPOSED COMB. CONCRETE CURB AND GUTTER, TYPE B-6.06
- Ⓗ PROPOSED COMB. CONCRETE CURB AND GUTTER, TYPE B-6.24
- Ⓘ PROPOSED CONCRETE MEDIAN SURFACE, 4"
- Ⓙ PROPOSED AGGREGATE BASE COURSE, 4"
- Ⓚ PROPOSED AGGREGATE SHOULDER, TYPE A" PROPOSED PIPE UNDERDRAINS, 4"
- Ⓛ PROPOSED POLYMERIZED BITUMINOUS MATERIALS (TACK COAT)
- Ⓜ PROPOSED CONCRETE STRUCTURES
- Ⓝ PROPOSED AGGREGATE WEDGE, TYPE B
- Ⓞ PROPOSED STONE RIPRAP, CLASS A3

MODEL: Default
FILE NAME: pw:\\ildot-pw.bentley.com:PWIDOT\Documents\IDOT Offices\District 8\Projects\D876318\CADData\CADsheets\D876818-sht-typical.dgn

USER NAME = Jon.Dintelman	DESIGNED -	REVISED -	STATE OF ILLINOIS DEPARTMENT OF TRANSPORTATION	PROPOSED TYPICAL SECTIONS			F.A.I. RTE.	SECTION	COUNTY	TOTAL SHEETS	SHEET NO.
	DRAWN -	REVISED -					270	60-3K-1	MADISON	576	24
PLOT SCALE = 100.0000 ' / in.	CHECKED -	REVISED -							CONTRACT NO. 76818		
PLOT DATE = 5/4/2024	DATE -	REVISED -		SCALE:	SHEET 7 OF 15 SHEETS	STA. TO STA.		ILLINOIS	FED. AID PROJECT		

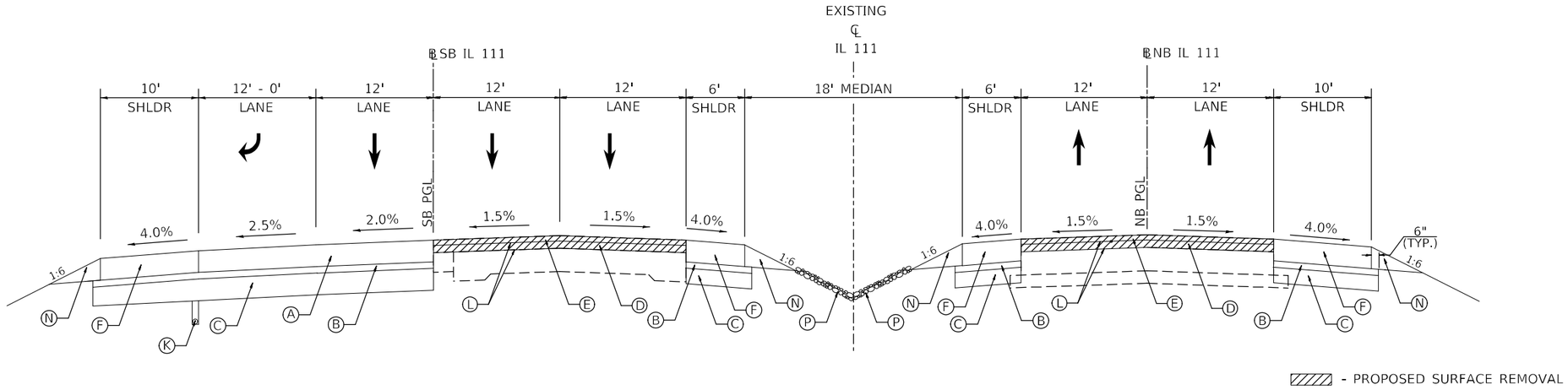

- PROPOSED SURFACE REMOVAL

PROPOSED TYPICAL SECTION IL 111

STA. 41+25.19 TO STA. 48+00.00
NB STA. 641+67.38 TO STA. 642+66.62
SB STA. 541+66.61 TO STA. 543+63.50

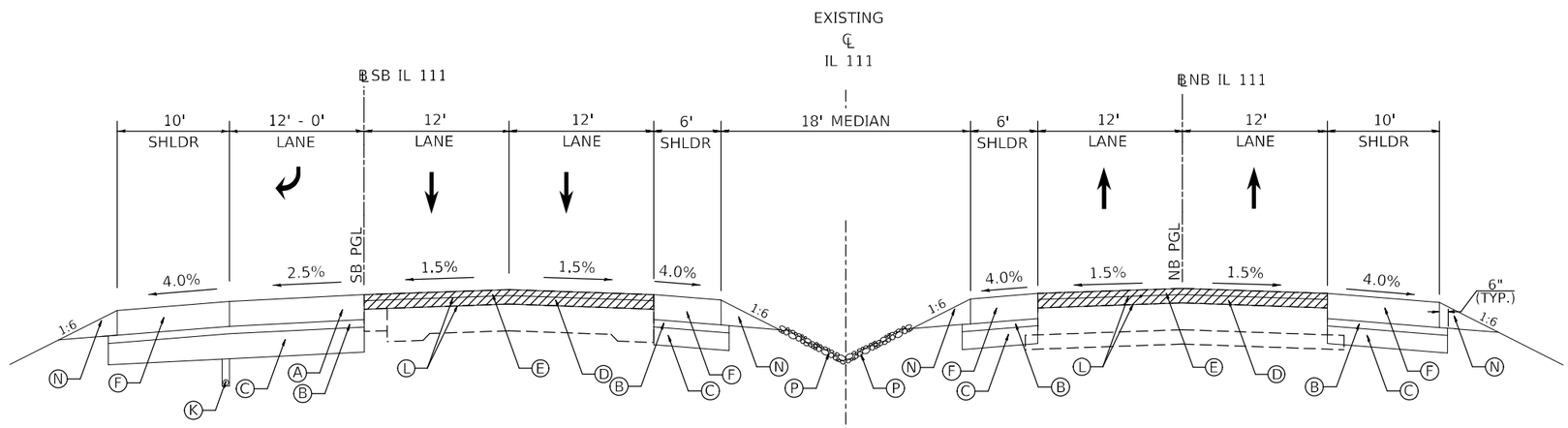

- PROPOSED SURFACE REMOVAL

PROPOSED TYPICAL SECTION IL 111

STA. 41+25.19 TO STA. 48+00.00
NB STA. STA. 642+66.62 TO STA. 648+42.38
SB STA. 543+63.50 TO STA. 548+41.32

LEGEND

- Ⓐ PROPOSED PORTLAND CEMENT CONCRETE PAVEMENT, 11" (JOINTED)
- Ⓑ PROPOSED STABILIZED SUBBASE - HMA, 4"
- Ⓒ PROPOSED AGGREGATE SUBGRADE IMPROVEMENT,12"
- Ⓓ PROPOSED BINDER COURSE, 2 $\frac{1}{4}$"
- Ⓔ PROPOSED HMA SURFACE COURSE, 1 $\frac{1}{2}$"
- Ⓕ PROPOSED P.C.C SHOULDERS. 11"
- Ⓖ PROPOSED COMB. CONCRETE CURB AND GUTTER, TYPE B-6.06
- Ⓗ PROPOSED COMB. CONCRETE CURB AND GUTTER, TYPE B-6.24
- Ⓘ PROPOSED CONCRETE MEDIAN SURFACE, 4"
- Ⓙ PROPOSED AGGREGATE BASE COURSE, 4"
- Ⓚ PROPOSED AGGREGATE SHOULDER, TYPE A" PROPOSED PIPE UNDERDRAINS, 4"
- Ⓛ PROPOSED POLYMERIZED BITUMINOUS MATERIALS (TACK COAT)
- Ⓜ PROPOSED CONCRETE STRUCTURES
- Ⓝ PROPOSED AGGREGATE WEDGE, TYPE B
- Ⓞ PROPOSED STONE RIPRAP, CLASS A3

USER NAME = Jon.Dintelman	DESIGNED -	REVISED -	STATE OF ILLINOIS DEPARTMENT OF TRANSPORTATION
	DRAWN -	REVISED -	
PLOT SCALE = 100.0000 ' / in.	CHECKED -	REVISED -	
PLOT DATE = 5/4/2024	DATE -	REVISED -	

PROPOSED TYPICAL SECTIONS

SCALE: | SHEET 8 OF 15 SHEETS | STA. TO STA.

F.A.I. RTE.	SECTION	COUNTY	TOTAL SHEETS	SHEET NO.
270	60-3K-1	MADISON	576	25
		CONTRACT NO. 76818		
		ILLINOIS	FED. AID PROJECT	

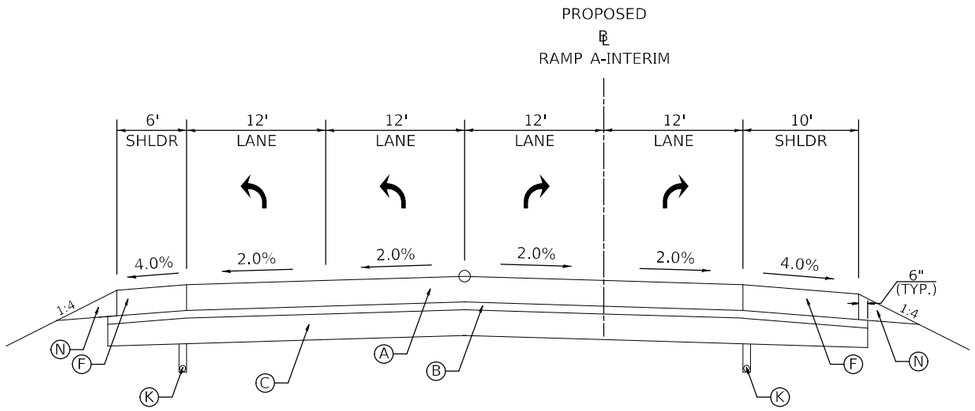

PROPOSED TYPICAL SECTION RAMP A

STA. 1110+38.43 TO STA. 1114+60.63

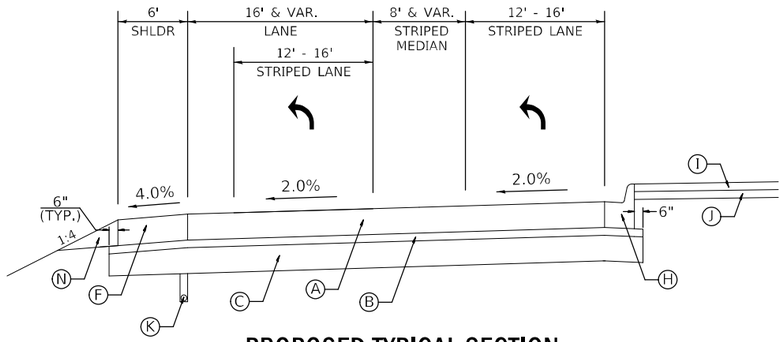

PROPOSED TYPICAL SECTION RAMP A - DUAL LEFT

STA. 10+00.00 TO STA. 13+12.31

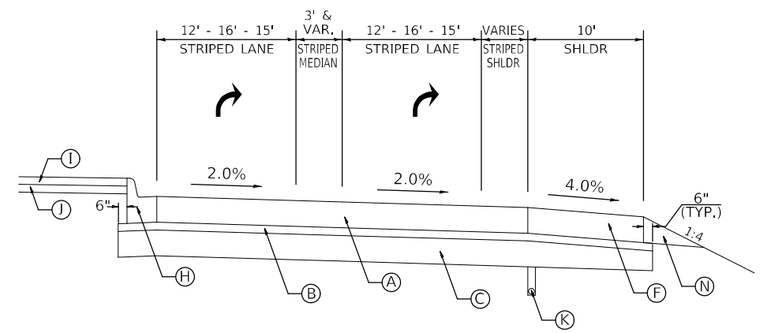

PROPOSED TYPICAL SECTION RAMP A - DUAL RIGHT

STA. 0+00.00 TO STA. 3+83.17

LEGEND

- Ⓐ PROPOSED PORTLAND CEMENT CONCRETE PAVEMENT, 11" (JOINTED)
- Ⓑ PROPOSED STABILIZED SUBBASE - HMA, 4"
- Ⓒ PROPOSED AGGREGATE SUBGRADE IMPROVEMENT,12"
- Ⓓ PROPOSED BINDER COURSE, 2 $\frac{1}{4}$"
- Ⓔ PROPOSED HMA SURFACE COURSE, 1 $\frac{1}{2}$"
- Ⓕ PROPOSED P.C.C SHOULDERS, 11"
- Ⓖ PROPOSED COMB. CONCRETE CURB AND GUTTER, TYPE B-6.06
- Ⓗ PROPOSED COMB. CONCRETE CURB AND GUTTER, TYPE B-6.24
- Ⓘ PROPOSED CONCRETE MEDIAN SURFACE, 4"
- Ⓙ PROPOSED AGGREGATE BASE COURSE, 4"
- Ⓚ PROPOSED AGGREGATE SHOULDER, TYPE A" PROPOSED PIPE UNDERDRAINS, 4"
- Ⓛ PROPOSED POLYMERIZED BITUMINOUS MATERIALS (TACK COAT)
- Ⓜ PROPOSED CONCRETE STRUCTURES
- Ⓝ PROPOSED AGGREGATE WEDGE, TYPE B
- Ⓞ PROPOSED STONE RIPRAP, CLASS A3

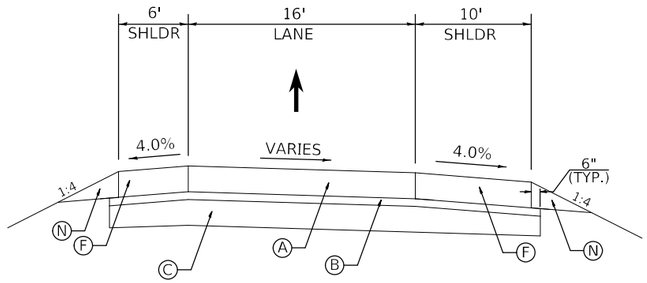

PROPOSED TYPICAL SECTION RAMP A

STA. 1103+25.00 TO STA. 1107+98.43

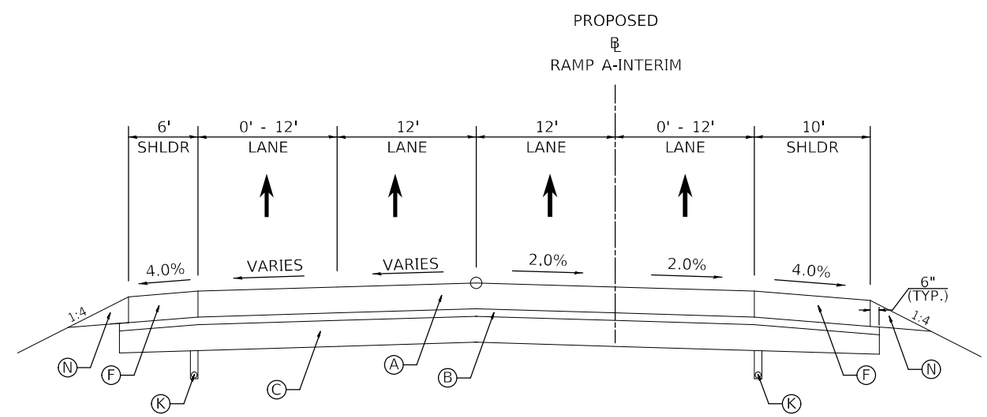

PROPOSED TYPICAL SECTION RAMP A

STA. 1107+98.43 TO STA. 1110+38.43

LEGEND

- Ⓐ PROPOSED PORTLAND CEMENT CONCRETE PAVEMENT, 11" (JOINTED)
- Ⓑ PROPOSED STABILIZED SUBBASE - HMA, 4"
- Ⓒ PROPOSED AGGREGATE SUBGRADE IMPROVEMENT,12"
- Ⓓ PROPOSED BINDER COURSE, 2 $\frac{1}{4}$"
- Ⓔ PROPOSED HMA SURFACE COURSE, 1 $\frac{1}{2}$"
- Ⓕ PROPOSED P.C.C SHOULDERS. 11"
- Ⓖ PROPOSED COMB. CONCRETE CURB AND GUTTER, TYPE B-6.06
- Ⓗ PROPOSED COMB. CONCRETE CURB AND GUTTER, TYPE B-6.24
- Ⓘ PROPOSED CONCRETE MEDIAN SURFACE, 4"
- Ⓙ PROPOSED AGGREGATE BASE COURSE, 4"
- Ⓚ PROPOSED AGGREGATE SHOULDER, TYPE A" PROPOSED PIPE UNDERDRAINS, 4"
- Ⓛ PROPOSED POLYMERIZED BITUMINOUS MATERIALS (TACK COAT)
- Ⓜ PROPOSED CONCRETE STRUCTURES
- Ⓝ PROPOSED AGGREGATE WEDGE, TYPE B
- Ⓞ PROPOSED STONE RIPRAP, CLASS A3

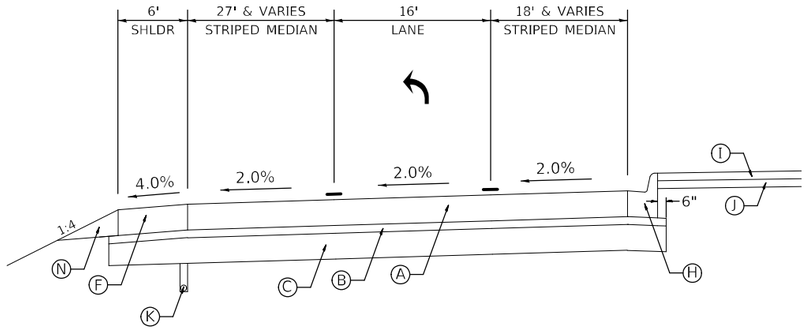

PROPOSED TYPICAL SECTION
RAMP B- SINGLE LEFT

STA. 10+00.00 TO STA. 13+39.39

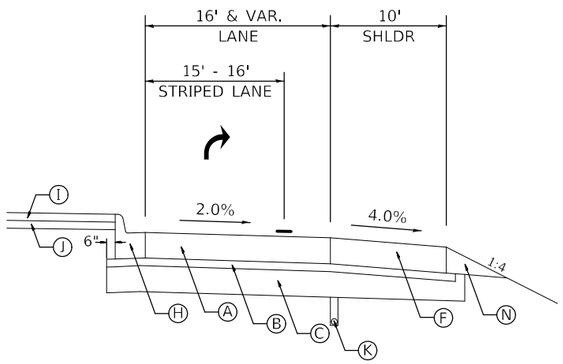

PROPOSED TYPICAL SECTION
RAMP B- SINGLE RIGHT

STA. 0+00.00 TO STA. 3+24.40

LEGEND

- Ⓐ PROPOSED PORTLAND CEMENT CONCRETE PAVEMENT, 11" (JOINTED)
- Ⓑ PROPOSED STABILIZED SUBBASE - HMA, 4"
- Ⓒ PROPOSED AGGREGATE SUBGRADE IMPROVEMENT,12"
- Ⓓ PROPOSED BINDER COURSE, 2 $\frac{1}{4}$"
- Ⓔ PROPOSED HMA SURFACE COURSE, 1 $\frac{1}{2}$"
- Ⓕ PROPOSED P.C.C SHOULDERS, 11"
- Ⓖ PROPOSED COMB. CONCRETE CURB AND GUTTER, TYPE B-6.06
- Ⓗ PROPOSED COMB. CONCRETE CURB AND GUTTER, TYPE B-6.24
- Ⓘ PROPOSED CONCRETE MEDIAN SURFACE, 4"
- Ⓙ PROPOSED AGGREGATE BASE COURSE, 4"
- Ⓚ PROPOSED AGGREGATE SHOULDER, TYPE A" PROPOSED PIPE UNDERDRAINS, 4"
- Ⓛ PROPOSED POLYMERIZED BITUMINOUS MATERIALS (TACK COAT)
- Ⓜ PROPOSED CONCRETE STRUCTURES
- Ⓝ PROPOSED AGGREGATE WEDGE, TYPE B
- Ⓞ PROPOSED STONE RIPRAP, CLASS A3

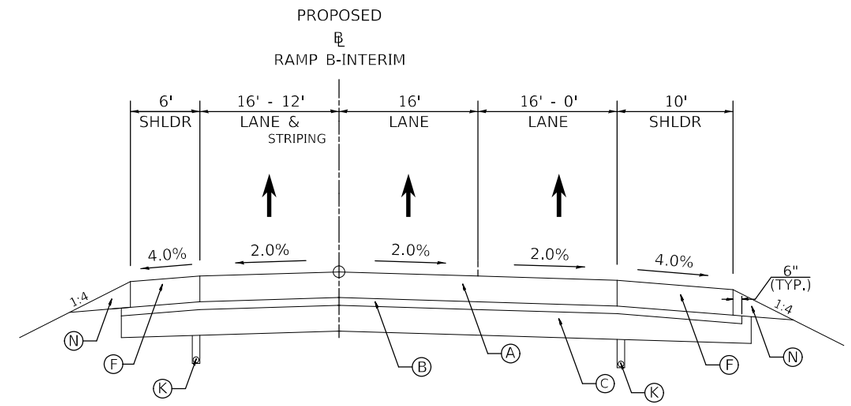

PROPOSED TYPICAL
SECTION RAMP B

STA. 2002+70.08 TO STA. 2011+75.38

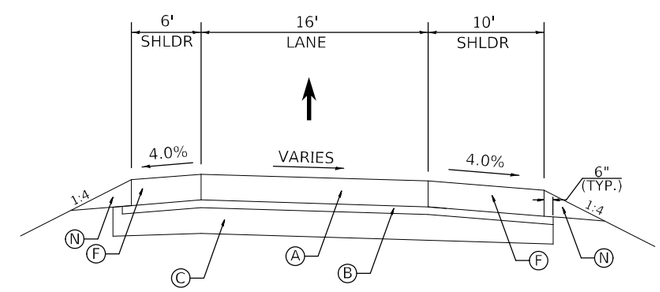

PROPOSED TYPICAL
SECTION RAMP B

STA. 2011+75.38 TO STA. 2014+30.32

MODEL: Default
FILE NAME: pw:\\ildot-pw.bentley.com:PWIDOT\Documents\IDOT Offices\District 8\Projects\D87681B\CAD\Dan\CAD sheets\D87681B-sht-typsk-st.dgn

USER NAME = Jon.Dintelman	DESIGNED -	REVISED -	STATE OF ILLINOIS DEPARTMENT OF TRANSPORTATION
	DRAWN -	REVISED -	
PLOT SCALE = 100.0000 ' / in.	CHECKED -	REVISED -	
PLOT DATE = 5/4/2024	DATE -	REVISED -	

PROPOSED TYPICAL SECTIONS

SCALE: | SHEET 11 OF 15 SHEETS | STA. TO STA.

F.A.I. RTE.	SECTION	COUNTY	TOTAL SHEETS	SHEET NO.
270	60-3K-1	MADISON	576	28
		CONTRACT NO. 76818		
		ILLINOIS	FED. AID PROJECT	

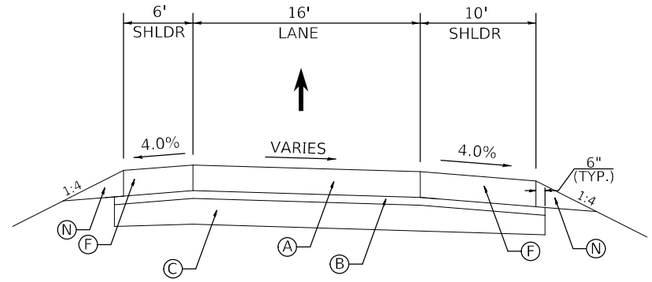

PROPOSED TYPICAL SECTION RAMP C

STA. 3302+75.00 TO STA. 3308+01.84

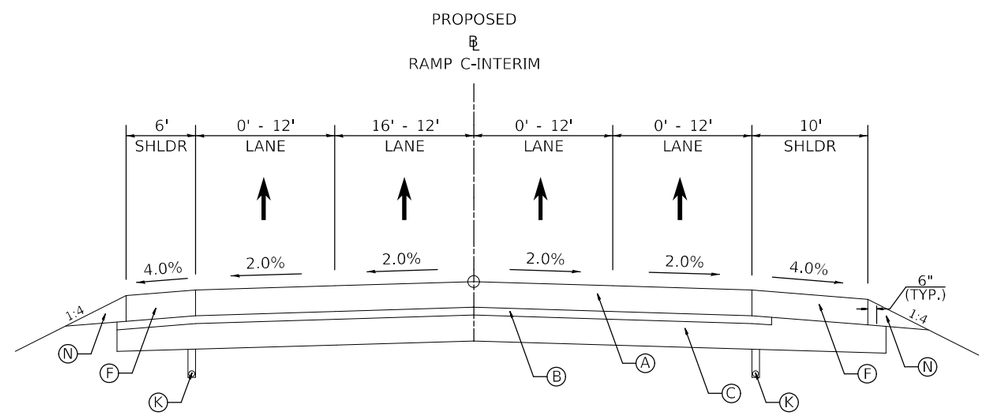

PROPOSED TYPICAL SECTION RAMP C

STA. 3308+01.84 TO STA. 3308+78.73

LEGEND

- Ⓐ PROPOSED PORTLAND CEMENT CONCRETE PAVEMENT, 11" (JOINTED)
- Ⓑ PROPOSED STABILIZED SUBBASE - HMA, 4"
- Ⓒ PROPOSED AGGREGATE SUBGRADE IMPROVEMENT,12"
- Ⓓ PROPOSED BINDER COURSE, 2 $\frac{1}{4}$"
- Ⓔ PROPOSED HMA SURFACE COURSE, 1 $\frac{1}{2}$"
- Ⓕ PROPOSED P.C.C SHOULDERS. 11"
- Ⓖ PROPOSED COMB. CONCRETE CURB AND GUTTER, TYPE B-6.06
- Ⓗ PROPOSED COMB. CONCRETE CURB AND GUTTER, TYPE B-6.24
- Ⓘ PROPOSED CONCRETE MEDIAN SURFACE, 4"
- Ⓙ PROPOSED AGGREGATE BASE COURSE, 4"
- Ⓚ PROPOSED AGGREGATE SHOULDER, TYPE A" PROPOSED PIPE UNDERDRAINS, 4"
- Ⓛ PROPOSED POLYMERIZED BITUMINOUS MATERIALS (TACK COAT)
- Ⓜ PROPOSED CONCRETE STRUCTURES
- Ⓝ PROPOSED AGGREGATE WEDGE, TYPE B
- Ⓞ PROPOSED STONE RIPRAP, CLASS A3

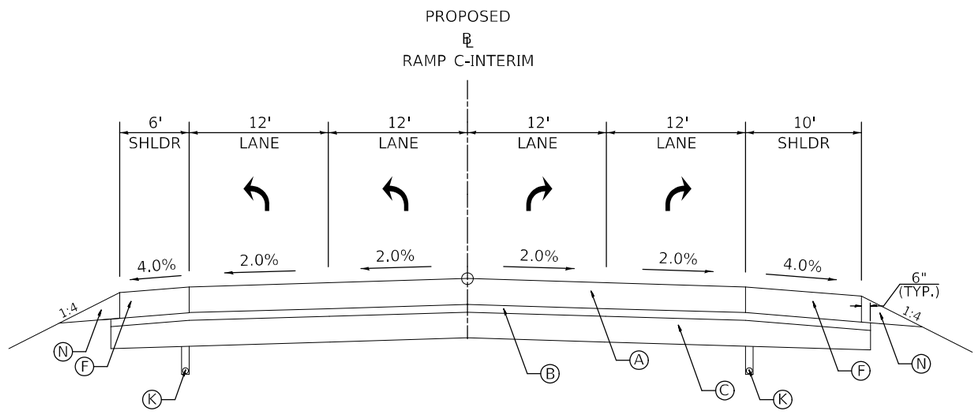

PROPOSED TYPICAL SECTION RAMP C

STA. 3308+78.73 TO STA. 3313+80.07

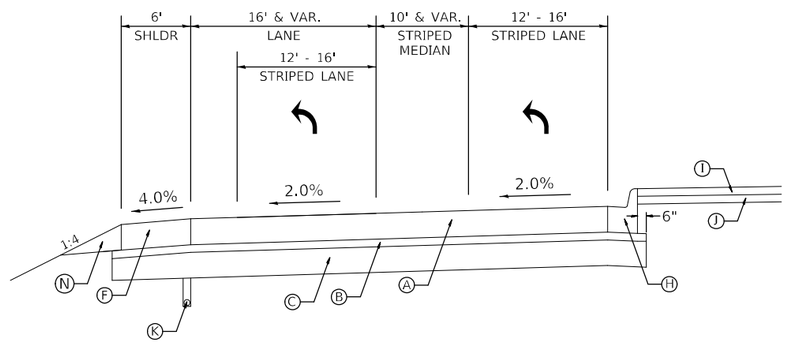

PROPOSED TYPICAL SECTION RAMP C - DUAL LEFT

STA. 10+00.00 TO STA. 13+34.50

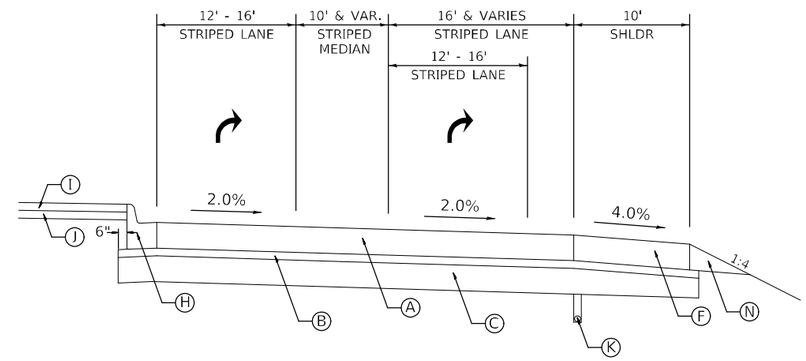

PROPOSED TYPICAL SECTION RAMP C- DUAL RIGHT

STA. 0+00.00 TO 3+65.79

LEGEND

- Ⓐ PROPOSED PORTLAND CEMENT CONCRETE PAVEMENT, 11" (JOINTED)
- Ⓑ PROPOSED STABILIZED SUBBASE - HMA, 4"
- Ⓒ PROPOSED AGGREGATE SUBGRADE IMPROVEMENT,12"
- Ⓓ PROPOSED BINDER COURSE, 2 $\frac{1}{4}$"
- Ⓔ PROPOSED HMA SURFACE COURSE, 1 $\frac{1}{2}$"
- Ⓕ PROPOSED P.C.C SHOULDERS. 11"
- Ⓖ PROPOSED COMB. CONCRETE CURB AND GUTTER, TYPE B-6.06
- Ⓗ PROPOSED COMB. CONCRETE CURB AND GUTTER, TYPE B-6.24
- Ⓘ PROPOSED CONCRETE MEDIAN SURFACE, 4"
- Ⓙ PROPOSED AGGREGATE BASE COURSE, 4"
- Ⓚ PROPOSED AGGREGATE SHOULDER, TYPE A" PROPOSED PIPE UNDERDRAINS, 4"
- Ⓛ PROPOSED POLYMERIZED BITUMINOUS MATERIALS (TACK COAT)
- Ⓜ PROPOSED CONCRETE STRUCTURES
- Ⓝ PROPOSED AGGREGATE WEDGE, TYPE B
- Ⓞ PROPOSED STONE RIPRAP, CLASS A3

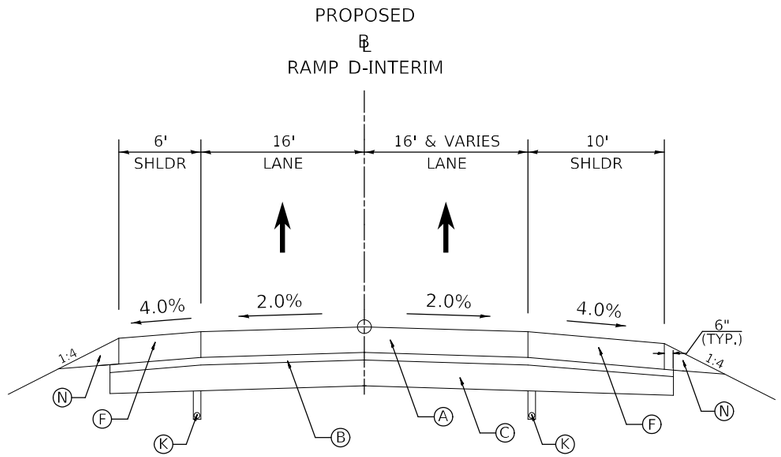

PROPOSED TYPICAL SECTION RAMP D

STA. 4402+23.36 TO STA. 4407+90.11

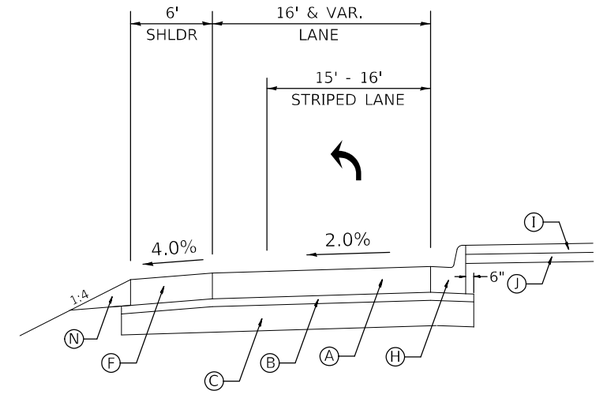

PROPOSED TYPICAL SECTION RAMP D- SINGLE LEFT

STA. 10+00.00 TO STA. 13+23.00

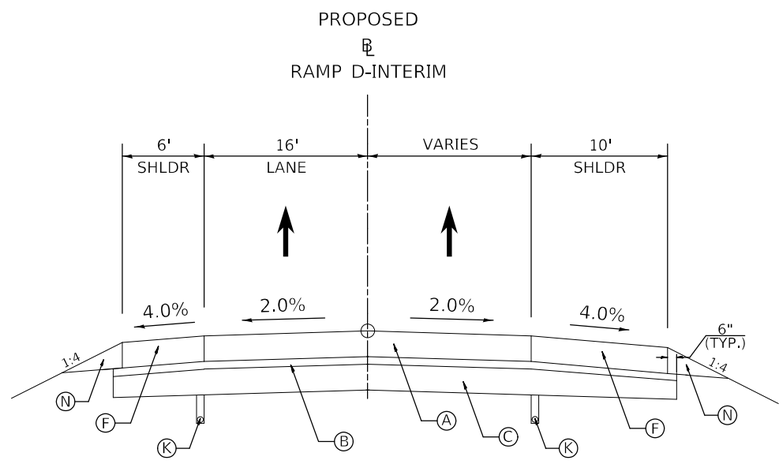

PROPOSED TYPICAL SECTION RAMP D

STA. STA. 4407+90.11 TO STA. 4412+95.00

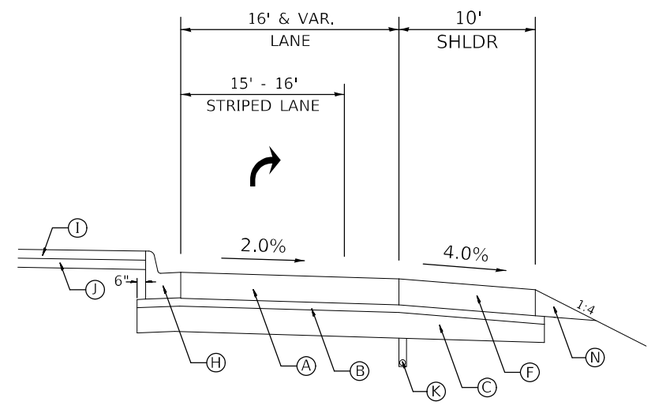

PROPOSED TYPICAL SECTION RAMP D- SINGLE RIGHT

STA. 0+00.00 TO STA. 3+04.67

LEGEND

- Ⓐ PROPOSED PORTLAND CEMENT CONCRETE PAVEMENT, 11" (JOINTED)
- Ⓑ PROPOSED STABILIZED SUBBASE - HMA, 4"
- Ⓒ PROPOSED AGGREGATE SUBGRADE IMPROVEMENT,12"
- Ⓓ PROPOSED BINDER COURSE, 2 $\frac{1}{4}$"
- Ⓔ PROPOSED HMA SURFACE COURSE, 1 $\frac{1}{2}$"
- Ⓕ PROPOSED P.C.C SHOULDERS, 11"
- Ⓖ PROPOSED COMB. CONCRETE CURB AND GUTTER, TYPE B-6.06
- Ⓗ PROPOSED COMB. CONCRETE CURB AND GUTTER, TYPE B-6.24
- Ⓘ PROPOSED CONCRETE MEDIAN SURFACE, 4"
- Ⓙ PROPOSED AGGREGATE BASE COURSE, 4"
- Ⓚ PROPOSED AGGREGATE SHOULDER, TYPE A" PROPOSED PIPE UNDERDRAINS, 4"
- Ⓛ PROPOSED POLYMERIZED BITUMINOUS MATERIALS (TACK COAT)
- Ⓜ PROPOSED CONCRETE STRUCTURES
- Ⓝ PROPOSED AGGREGATE WEDGE, TYPE B
- Ⓞ PROPOSED STONE RIPRAP, CLASS A3

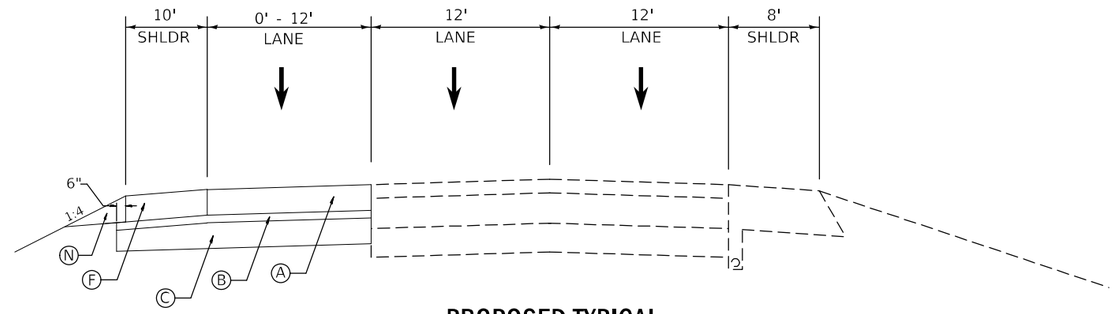

PROPOSED TYPICAL
SECTION RAMP D/I-270

STA. 375+54.43 TO STA. 386+95.18

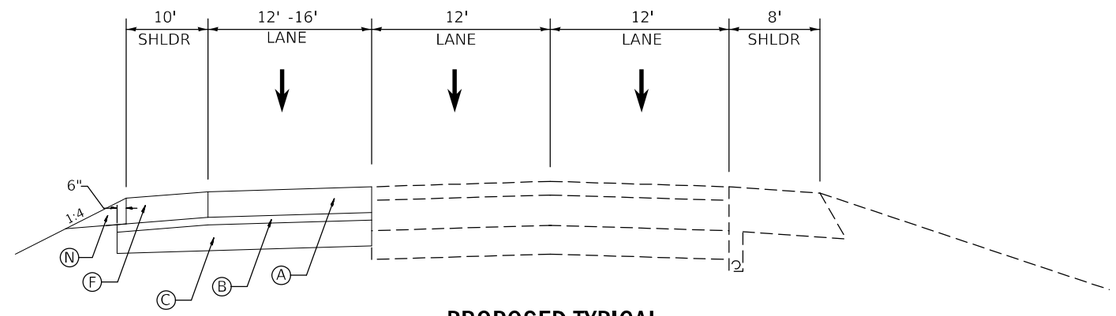

PROPOSED TYPICAL
SECTION RAMP D/I-270

STA. 386+95.18 TO 390+54.97

STA. 390+54.97 I-270 = STA. 4412+95.00 IL 111

LEGEND

- Ⓐ PROPOSED PORTLAND CEMENT CONCRETE PAVEMENT, 11" (JOINTED)
- Ⓑ PROPOSED STABILIZED SUBBASE - HMA, 4"
- Ⓒ PROPOSED AGGREGATE SUBGRADE IMPROVEMENT,12"
- Ⓓ PROPOSED BINDER COURSE, 2 $\frac{1}{4}$"
- Ⓔ PROPOSED HMA SURFACE COURSE, 1 $\frac{1}{2}$"
- Ⓕ PROPOSED P.C.C SHOULDERS. 11"
- Ⓖ PROPOSED COMB. CONCRETE CURB AND GUTTER, TYPE B-6.06
- Ⓗ PROPOSED COMB. CONCRETE CURB AND GUTTER, TYPE B-6.24
- Ⓘ PROPOSED CONCRETE MEDIAN SURFACE, 4"
- Ⓙ PROPOSED AGGREGATE BASE COURSE, 4"
- Ⓚ PROPOSED AGGREGATE SHOULDER, TYPE A" PROPOSED PIPE UNDERDRAINS, 4"
- Ⓛ PROPOSED POLYMERIZED BITUMINOUS MATERIALS (TACK COAT)
- Ⓜ PROPOSED CONCRETE STRUCTURES
- Ⓝ PROPOSED AGGREGATE WEDGE, TYPE B
- Ⓞ PROPOSED STONE RIPRAP, CLASS A3

CONCRETE PAVEMENT SCHEDULE / NORTHBOUND THROUGH LANES

LOCATION			PORTLAND CEMENT CONCRETE PAVEMENT 11" (JOINTED)	STABILIZED SUBBASE - HMA, 4"	AGG. SUBGRADE IMPROVEMENT 12"	DIAMOND GRINDING AND GROOVING (ROADWAY SECTION)	PROTECTIVE COAT
			(SQ YD)	(SQ YD)	(SQ YD)	(SQ YD)	(SQ YD)
STA	to	STA					
617+25.67	to	617+83.23	396.52	415.71	415.71	396.52	396.52
617+83.23	to	619+50.00	889.44	945.03	945.03	889.44	889.44
619+50.00	to	620+93.67	686.42	734.31	734.31	686.42	686.42
620+93.67	to	622+50.00	590.58	642.69	642.69	590.58	590.58
622+50.00	to	627+08.44	1528.13	1680.94	1680.94	1528.13	1528.13
627+08.44	to	633+43.33	3174.45	3386.08	3386.08	3174.45	3174.45
633+43.33	to	636+66.90	1617.85	1725.71	1725.71	1617.85	1617.85
636+66.90	to	639+47.38	1869.87	1963.36	1963.36	1869.87	1869.87
639+47.38	to	641+27.38	1080.00	1140.00	1140.00	1080.00	1080.00
641+27.38	to	641+67.33	213.07	226.39	226.39	213.07	213.07
SUB-TOTALS			12046	12860	12860	12046	12046

CONCRETE PAVEMENT SCHEDULE / SOUTHBOUND THROUGH LANES

LOCATION			PORTLAND CEMENT CONCRETE PAVEMENT 11" (JOINTED)	STABILIZED SUBBASE - HMA, 4"	AGG. SUBGRADE IMPROVEMENT 12"	DIAMOND GRINDING AND GROOVING (ROADWAY SECTION)	PROTECTIVE COAT
			(SQ YD)	(SQ YD)	(SQ YD)	(SQ YD)	(SQ YD)
STA	to	STA					
517+27.44	to	518+00.00	193.49	`	`	193.49	193.49
518+00.00	to	520+70.53	856.68	1142.24	1142.24	856.68	856.68
520+70.53	to	522+50.53	930.00	1240.00	1240.00	930.00	930.00
522+50.53	to	523+95.84	968.73	1291.64	1291.64	968.73	968.73
523+95.84	to	527+31.62	1678.90	2238.53	2238.53	1678.90	1678.90
527+31.62	to	533+31.92	3001.50	4002.00	4002.00	3001.50	3001.50
533+31.92	to	537+41.27	1364.50	1819.33	1819.33	1364.50	1364.50
537+41.27	to	540+38.79	892.56	1190.08	1190.08	892.56	892.56
540+38.79	to	541+66.62	340.88	454.51	454.51	340.88	340.88
SUB-TOTALS			10227	13378	13378	10227	10227

CONCRETE PAVEMENT SCHEDULE / RAMPS

LOCATION			PORTLAND CEMENT CONCRETE PAVEMENT 11" (JOINTED)	STABILIZED SUBBASE - HMA, 4"	AGG. SUBGRADE IMPROVEMENT 12"	DIAMOND GRINDING AND GROOVING (ROADWAY SECTION)	PROTECTIVE COAT
			(SQ YD)	(SQ YD)	(SQ YD)	(SQ YD)	(SQ YD)
STA	TO	STA					
RAMP A RIGHT							
1107+98.43	TO	1110+38.43	160.00	160.00	160.00	160.00	160.00
1110+38.43	TO	1114+60.63	562.93	562.93	562.93	562.93	562.93
1114+60.63	TO	1116+69.86	1003.20	1003.20	1003.20	1003.20	1003.20
RAMP A LEFT							
1103+25.00	TO	1105+84.23	460.85	460.85	460.85	460.85	460.85
1105+84.23	TO	1107+98.43	380.80	380.80	380.80	380.80	380.80
1107+98.43	TO	1110+38.43	800.00	800.00	800.00	800.00	800.00
1110+38.43	TO	1114+47.37	1635.76	1635.76	1635.76	1635.76	1635.76
1114+47.37	TO	1116+10.92	995.19	995.19	995.19	995.19	995.19
RAMP B RIGHT							
2000+34.28	TO	2002+08.72	685.24	743.39	743.39	685.24	685.24
2002+08.72	TO	2003+75.38	592.57	648.12	648.12	592.57	592.57
2003+75.38	TO	2007+72.50	1235.48	1367.85	1367.85	1235.48	1235.48
2007+72.50	TO	2011+75.38	895.29	1029.58	1029.58	895.29	895.29
2011+78.38	TO	2014+30.32	447.89	531.87	531.87	447.89	447.89
RAMP B LEFT							
2000+80.92	TO	2002+70.08	1090.27	1090.27	1090.27	1090.27	1090.27
2002+70.08	TO	2006+85.72	738.92	738.92	738.92	738.92	738.92
2006+85.72	TO	2008+85.72	311.11	311.11	311.11	311.11	311.11
2008+85.72	TO	2011+75.38	386.21	386.21	386.21	386.21	386.21
RAMP C LEFT							
3302+75.00	TO	3308+01.84	936.60	936.60	936.60	936.60	936.60
3308+01.84	TO	3308+78.87	188.30	188.30	188.30	188.30	188.30
3308+78.87	TO	3313+80.07	1336.53	1336.53	1336.53	1336.53	1336.53
3313+80.07	TO	3315+55.85	889.10	889.10	889.10	889.10	889.10
RAMP C RIGHT							
3308+01.84	TO	3308+78.87	188.30	188.30	188.30	188.30	188.30
3308+78.87	TO	3313+91.76	1367.71	1367.71	1367.71	1367.71	1367.71
3313+91.76	TO	3315+67.72	965.67	965.67	965.67	965.67	965.67
RAMP D RIGHT							
4400+59.11	TO	4402+19.65	568.00	568.00	568.00	568.00	568.00
4402+19.65	TO	4403+74.12	274.61	274.61	274.61	274.61	274.61
4403+74.12	TO	4407+90.11	556.29	556.29	556.29	556.29	556.29
4407+90.11	TO	4411+74.12	163.84	163.84	163.84	163.84	163.84
RAMP D LEFT							
4400+65.38	TO	4402+23.36	578.00	578.00	578.00	578.00	578.00
4402+23.36	TO	4407+90.11	1007.56	1007.56	1007.56	1007.56	1007.56
4407+90.11	TO	4412+55.00	826.47	826.47	826.47	826.47	826.47
4412+55.00	TO	4412+95.09	71.27	71.27	71.27	71.27	71.27
4412+95.09	TO	4416+54.25	561.00	561.00	561.00	561.00	561.00
386+95.19	TO	378+64.43	1107.68	1107.68	1107.68	1107.68	1107.68
378+64.43	TO	375+54.43	223.89	223.89	223.89	223.89	223.89
SUB-TOTALS			24193	24657	24657	24193	24193

COMBINED CONCRETE PAVEMENT SCHEDULE

LOCATION	PORTLAND CEMENT CONCRETE PAVEMENT 11" (JOINTED)	STABILIZED SUBBASE - HMA, 4"	AGG. SUBGRADE IMPROVEMENT 12"	DIAMOND GRINDING AND GROOVING (ROADWAY SECTION)	PROTECTIVE COAT
	(SQ YD)	(SQ YD)	(SQ YD)	(SQ YD)	(SQ YD)
NORTHBOUND THRU LANES	12046	12860	12860	12046	12046
SOUTHBOUND THRU LANES	10227	13378	13378	10227	10227
RAMPS	24193	24657	24657	24193	24193
SUB-TOTALS	46466	50895	50895	46466	46466

NOTE: A QUANTITY OF 'WELDED WIRE REINFORCEMENT' HAS BEEN INCLUDED IN THE PLANS EQUAL TO THE QUANTITY OF 'PORTLAND CEMENT CONCRETE PAVEMENT 11" (JOINTED)'

CURB & GUTTER SCHEDULE

LOCATION					LENGTH	COMB. CONCRETE CURB & GUTTER B-6.06	COMB. CONCRETE CURB & GUTTER B-6.24	PROTECTIVE COAT
					(FT)	(FEET)	(FEET)	(SQ YD)
STA	TO	STA	RT/LT	DESCRIPTION				
SOUTHBOUND IL 111								
517+95.52	TO	519+71.76	LT	MEDIAN	176.24		176.24	51
519+71.76	TO	524+81.67	LT	MEDIAN	509.91		509.91	146
524+54.60	TO	525+42.77	RT	RAMP D ISLAND	88.17		88.17	25
525+41.03	TO	526+30.66	LT	RAMP A ISLAND	89.63		89.63	26
526+03.52	TO	528+33.76	RT	MEDIAN	230.24		230.24	66
528+33.76	TO	529+20.28	LT	VAR. WIDTH FLAG	86.52		86.52	25
528+33.76	TO	531+75.57	RT	MEDIAN	341.81		341.81	98
529+20.28	TO	530+89.79	LT	EDGE OF PAV.	169.51		169.51	49
530+89.79	TO	531+75.57	LT	VAR. WIDTH FLAG	85.78		85.78	25
531+75.57	TO	534+67.46	RT	MEDIAN	291.89		291.89	84
534+30.16	TO	535+13.58	LT	RAMP B ISLAND	83.42		83.42	24
535+13.58	TO	535+75.37	LT	RAMP C ISLAND	61.79		61.79	18
535+91.58	TO	541+66.62	LT	MEDIAN	575.04		575.04	165
NORTHBOUND IL 111								
617+93.76	TO	619+50.00	RT	MEDIAN	156.24	156.24		17
619+50.00	TO	619+71.50	RT	MEDIAN TRANS. 6"-24"	21.50		21.50	6
619+71.50	TO	620+70.53	RT	MEDIAN	99.03		99.03	28
620+70.53	TO	621+30.55	LT	VAR. WIDTH FLAG	60.02		60.02	17
621+30.55	TO	622+50.48	LT	EDGE OF PAV.	119.93		119.93	34
622+50.48	TO	623+27.21	LT	VAR. WIDTH FLAG	76.73		76.73	22
621+30.55	TO	624+85.12	RT	MEDIAN	354.57		354.57	102
624+90.72	TO	625+32.19	LT	RAMP A ISLAND	41.47		41.47	12
625+65.83	TO	626+53.80	RT	RAMP D ISLAND	87.97		87.97	25
626+12.44	TO	628+63.00	LT	MEDIAN	250.56		250.56	72
628+63.00	TO	629+48.28	RT	VAR. WIDTH FLAG	85.28		85.28	24
629+48.28	TO	631+17.84	RT	EDGE OF PAV.	169.56		169.56	49
628+63.00	TO	631+17.84	LT	MEDIAN	254.84		254.84	73
631+17.84	TO	631+98.94	RT	VAR. WIDTH FLAG	81.10		81.10	23
631+17.84	TO	634+56.73	LT	MEDIAN	338.89		338.89	97
634+49.97	TO	635+18.78	RT	RAMP C ISLAND	68.81		68.81	20
635+16.21	TO	636+03.72	LT	RAMP B ISLAND	87.51		87.51	25
635+78.16	TO	641+67.36	RT	MEDIAN	589.20		589.20	169
RAMP A								
1115+56.58	TO	1116+55.51	RT	RAMP A ISLAND	113.80		113.80	33
1115+55.87	TO	1116+05.27	LT	RAMP A ISLAND	79.10		79.10	23
RAMP B								
2000+41.48	TO	2001+41.69	RT	RAMP B ISLAND	128.7		128.70	37
2000+82.80	TO	2001+42.41	LT	RAMP B ISLAND	103.5		103.50	30
RAMP C								
3314+96.76	TO	3315+61.63	LT	RAMP C ISLAND	72.2		72.20	21
3314+96.76	TO	3315+61.63	RT	RAMP C ISLAND	85.4		85.40	24
RAMP D								
4400+62.52	TO	4401+40.10	RT	RAMP D ISLAND	115.65		115.65	33
4400+61.20	TO	4401+40.24	LT	RAMP D ISLAND	123.62		123.62	35
TOTALS						156	6399	1852

MODEL: Default
FILE NAME: pw:\\ildot-pw.bentley.com:PWIDOT\Documents\IDOT Offices\District 8\Projects\D87681B\CAD\Data\CADsheets\D87681B-sht-schedule.dgn

USER NAME = Jon.Dintelman	DESIGNED - _____	REVISED - _____	
	DRAWN - _____	REVISED - _____	
PLOT SCALE = 100.0000 ' / in.	CHECKED - _____	REVISED - _____	
PLOT DATE = 6/6/2024	DATE - _____	REVISED - _____	

STATE OF ILLINOIS
DEPARTMENT OF TRANSPORTATION

SCHEDULES

SCALE: _____ SHEET __ OF __ SHEETS STA. _____ TO STA. _____

F.A.I. RTE.	SECTION	COUNTY	TOTAL SHEETS	SHEET NO.
270	60-3K-1	MADISON	576	35
		CONTRACT NO. 76818		
		ILLINOIS	FED. AID PROJECT	

CONCRETE SHOULDER SCHEDULE

LOCATION			RT/LT	PORTLAND CEMENT CONCRETE SHOULDERS 11"	STABILIZED SUBBASE - HMA, 4"	AGG. SUBGRADE IMPROVEMENT 12"	PROTECTIVE COAT	AGGREGATE WEDGE, TYPE B	SHOULDER RUMBLE STRIPS, 16"
				(SQ YD)	(SQ YD)	(SQ YD)	(SQ YD)	(TON)	(FOOT)
STA	TO	STA							
SOUTHBOUND IL 111									
517+40.00	TO	520+70.53	RT	293.80	312.16	312.16	293.80	23.55	330.53
520+70.53	TO	523+95.84	RT	289.16	307.23	307.23	289.16	23.18	325.31
RAMP OMISSION									
527+09.55	TO	528+33.76	LT	138.01	144.91	144.91	138.01	8.85	124.21
CURB & GUT. OMISSION									
531+75.57	TO	533+54.89	LT	199.24	209.20	209.20	199.24	12.78	179.32
RAMP OMISSION									
533+41.49	TO	541+26.59	RT	872.33	915.95	915.95	872.33	55.94	785.10
541+26.59	TO	541+66.62	RT/LT	53.37	55.59	55.59	53.37	2.85	40.03
541+66.62	TO	548+13.62	RT/LT	1150.22	1186.16	1186.16	1150.22	46.10	647.00
548+13.62	TO	548+41.32	RT/LT	46.17	47.71	47.71	46.17	1.97	27.70
NORTHBOUND IL 111									
617+69.49	TO	620+70.00	LT	267.12	283.82	283.82	267.12	21.41	300.51
CURB & GUT. OMISSION					0.00			0.00	
623+27.22	TO	623+61.47	LT	30.44	32.34	32.34	30.44	2.44	34.25
RAMP OMISSION									
626+85.56	TO	628+63.00	RT	197.16	207.02	207.02	197.16	12.64	177.44
CURB & GUT. OMISSION									
631+98.94	TO	633+67.46	RT	187.24	196.60	196.60	187.24	12.01	168.52
RAMP OMISSION									
636+66.90	TO	641+27.38	LT	511.64	537.22	537.22	511.64	32.81	460.48
641+27.38	TO	641+67.38	RT/LT	53.33	55.55	55.55	53.33	2.85	40.00
641+67.38	TO	648+09.00	RT/LT	1140.66	1176.31	1176.31	1140.66	45.72	641.62
648+09.00	TO	648+42.35	RT/LT	55.58	57.43	57.43	55.58	2.38	33.35
RAMP A									
1103+25.00	TO	1105+84.25	LT	398.16	412.56	412.56	398.16	18.47	259.25
1103+25.00	TO	1105+84.25	RT	172.83	187.23	187.23	172.83	18.47	259.25
1105+84.25	TO	1107+98.43	RT/LT	237.98	249.88	249.88	237.98	15.26	214.18
1107+98.43	TO	1114+47.37	LT	432.63	468.68	468.68	432.63	46.24	648.94
1107+98.43	TO	1114+60.63	RT	735.78	772.57	772.57	735.78	47.19	662.20
+50.00	TO	3+33.17	RT	314.63	330.36	330.36	314.63	20.18	283.17
10+50.00	TO	12+36.00	LT	124.00	134.33	134.33	124.00	13.25	186.00
RAMP B					0.00				
+50.00	TO	2+74.40	RT	249.33	261.80	261.80	249.33	15.99	224.40
2+25.25	TO	3+24.40	LT	66.10	71.61	71.61	66.10	7.06	99.15
2002+11.00	TO	2007+00.00	RT	543.33	570.50	570.50	543.33	34.84	489.00
2002+70.08	TO	2007+00.00	LT	286.61	310.49	310.49	286.61	30.63	429.92
2007+00.00	TO	2011+75.38	RT/LT	845.12	871.53	871.53	845.12	33.87	475.38
2011+75.38	TO	2014+30.32	RT	169.96	184.12	184.12	169.96	18.17	254.94
2011+75.38	TO	2014+30.32	LT	68.05	82.21	82.21	68.05	18.17	254.94
RAMP C									
3302+75.00	TO	3308+01.84	LT	456.82	486.09	486.09	456.82	37.54	526.84
3302+75.00	TO	3308+01.84	RT	351.23	380.50	380.50	351.23	37.54	526.84
3308+01.84	TO	3313+91.76	RT	655.47	688.24	688.24	655.47	42.04	589.92
3308+01.84	TO	3313+80.07	LT	385.49	417.61	417.61	385.49	41.20	578.23
10+50.00	TO	12+56.03	LT	137.35	148.80	148.80	137.35	14.68	206.03
+50.00	TO	3+20.04	RT	300.04	315.04	315.04	300.04	19.24	270.04
RAMP D									
+50.00	TO	2+54.67	RT	227.41	238.78	238.78	227.41	14.58	204.67
10+77.22	TO	12+73.00	LT	130.52	141.40	141.40	130.52	13.95	195.78
4402+19.60	TO	4407+90.11	RT	633.90	665.60	665.60	633.90	40.65	570.51
4402+23.36	TO	4407+90.11	LT	377.83	409.32	409.32	377.83	40.38	566.75
4407+90.11	TO	4412+55.00	RT	309.93	335.76	335.76	309.93	33.13	464.89
4407+90.11	TO	4411+88.00	LT	176.84	198.95	198.95	176.84	28.35	397.89
4411+88.00	TO	4412+95.00	LT	155.11	161.06	161.06	155.11	7.63	107.09
4412+55.00	TO	4416+54.25	RT	266.17	288.35	288.35	266.17	28.45	399.25
386+95.19	TO	375+54.43	RT	760.51	823.89	823.89	760.51	81.29	1140.76
TOTALS				15455	16332	16332	15455	1126	15802

MODEL: Default
FILE NAME: pw:\\ildot-pw.bentley.com:PWIDOT\Documents\IDOT Offices\District 8\Projects\D87681B\CADData\CADsheets\D87681B-sht-schedule.dgn

USER NAME = Jon.Dintelman
PLOT SCALE = 100.0000 ' / in.
PLOT DATE = 6/6/2024

DESIGNED - _____
DRAWN - _____
CHECKED - _____
DATE - _____

REVISED - _____
REVISED - _____
REVISED - _____
REVISED - _____

STATE OF ILLINOIS
DEPARTMENT OF TRANSPORTATION

SCHEDULES

SCALE: _____ SHEET __ OF __ SHEETS STA. _____ TO STA. _____

F.A.I. RTE.	SECTION	COUNTY	TOTAL SHEETS	SHEET NO.
270	60-3K-1	MADISON	576	36
		CONTRACT NO. 76818		
		ILLINOIS FED. AID PROJECT		

EARTHWORK SCHEDULE

LOCATION			EARTH EXCAVATION	AVERAGE SHRINKAGE FACTOR	EARTH EXCAVATION (ADJUSTED)	EMBANKMENT	EARTHWORK BALANCE		FURNISHED EXCAVATION	REMARKS
							EXCAVATION REQUIRED TO	EXCESS EXCAVATION		
STA.	TO	STA.	CU YD	%	CU YD	CU YD	CU YD	CU YD	CU YD	
IL 111 (EXT. STA.)										
17+27.50	TO	22+50.00	2,058	25%	1,543	606		1,250		IL 111 NORTH OF DDI
22+50.00	TO	33+50.00	3,577	25%	2,683	12,868	10,185		10,185	IL 111 DDI AND INTERSECTIONS
33+50.00	TO	48+50.00	4,425	25%	3,319	10,787	7,468		7,468	IL 111 SOUTH OF DDI
IL 111 RAMP A										
1103+25.05	TO	1107+98.43	729	25%	547	1,086	539		539	TEMPORARY RAMP CONNECTION
1107+98.43	TO	1115+50.00	11,846	25%	8,885	9,028	143		143	PERMANENT RAMP IMPROVEMENTS
IL 111 RAMP B										
2001+50.00	TO	2011+75.38	11,902	25%	8,927	9,743	816		816	PERMANENT RAMP IMPROVEMENTS
2011+75.38	TO	2014+30.25	503	25%	377	163		286		TEMPORARY RAMP CONNECTION
IL 111 RAMP C										
3302+75.00	TO	3308+01.84	989	25%	742	2,759	2,017		2,017	TEMPORARY RAMP CONNECTION
3308+01.84	TO	3314+50.00	7,846	25%	5,884	5,000			-884	PERMANENT RAMP IMPROVEMENTS
IL 111 RAMP D										
4401+50.00	TO	4407+90.11	4,979	25%	3,734	7,487	3,753		3,753	PERMANENT RAMP IMPROVEMENTS
4407+90.11	TO	4416+54.25	1,646	25%	1,235	2,527	1,292		1,292	TEMPORARY RAMP CONNECTION AND RAMP D MODIFIED ENT.
I-270										
374+00.00	TO	387+00.00	617	25%	463	145		424		RAMP D MODIFIED ENTRANCE
DETENTION RAMP A-IN			7,799	25%	5,849	128			-5,721	TO BE USED FOR ROADWAY EMBANKMENT
DETENTION RAMP B-IN			9,296	25%	6,972	334			-6,638	TO BE USED FOR ROADWAY EMBANKMENT
DETENTION RAMP C-IN			8,489	25%	6,367	178			-6,189	TO BE USED FOR ROADWAY EMBANKMENT
DETENTION RAMP D-IN			8,569	25%	6,427	913			-5,514	TO BE USED FOR ROADWAY EMBANKMENT
DETENTION RAMP A-OUT			5,414	25%	4,061	10		5,401		TO BE STOCKPILED AT IL 3 INTERCHANGE
DETENTION RAMP B-OUT			4,594	25%	3,446	600		3,794		TO BE STOCKPILED AT IL 3 INTERCHANGE
RAMP C OUTER GRADING			2,095	25%	1,571	430		1,522		TO BE STOCKPILED AT IL 3 INTERCHANGE
DETENTION RAMP D-OUT			1,403	25%	1,052	219		1,111		TO BE STOCKPILED AT IL 3 INTERCHANGE
TOTALS			98,776					13,788	1,268	

PIPE CULVERT REMOVAL

LOCATION	PIPE CULVERT REMOVAL	FILLING EXISTING CULVERTS	CONCRETE HEADWALL REMOVAL
	(FT)	(CU YD)	(FT)
EXT STA			
IL 111 NORTHBOUND			
26+00.18	53		
28+27.00 LT		34.9	18
36+00.00	57		
IL 111 SOUTHBOUND			
28+73.50 RT		34.3	18
RAMP C1			
4+17.00	45.00		18
RAMP C2			
12+42.00	44.00		19
RAMP C3			
4+77.00	43.00		30
RAMP C5			
18+75.00	56.00		20
RAMP C6			
4+55.00	45.00		20
RAMP C7			
13+72.5	45.00		23
RAMP C8			
10+38.00	45.00		26
SUB-TOTALS	433	69	192

PAVEMENT REMOVAL

LOCATION			PAVEMENT REMOVAL
			(SQ YD)
STA	TO	STA	
IL 111 (EX. STA.)			
IL 111 NORTHBOUND			
17+27.50	TO	17+85.00	275.00
17+85.00	TO	19+66.37	725.48
19+66.37	TO	21+83.95	725.27
21+83.95	TO	28+87.94	1877.31
28+87.94	TO	30+84.88	831.52
30+84.88	TO	31+29.18	118.13
31+29.18	TO	41+25.17	2655.97
IL 111 SOUTHBOUND			
17+28.19	TO	17+75.00	199.00
17+75.00	TO	19+93.45	582.53
19+93.45	TO	28+88.00	2385.47
28+88.00	TO	31+19.31	976.64
31+19.31	TO	32+82.89	436.21
32+82.89	TO	41+25.19	2246.13
RAMPS (EX. STA.)			
RAMP C1			
0+00.00	TO	1+37.00	129.39
1+37.00	TO	16+34.00	2661.33
16+34.00	TO	20+01.51	571.68
20+01.51	TO	21+69.25	223.65
21+69.25	TO	23+89.22	158.87
RAMP C2			
1+51.00	TO	2+50.00	88.00
2+50.00	TO	15+00.00	2222.22
RAMP C3			
0+00	TO	10+30.00	1831.11
10+30.00	TO	11+23.35	68.00
RAMP C4			
5+02.56	TO	21+32.15	1831.11
21+32.15	TO	22+58.40	224.44
22+58.40	TO	26+45.36	365.46
RAMP C5			
5+30.00	TO	19+37.31	2501.88
19+37.31	TO	19+86.26	138.33
RAMP C6			
0+00.00	TO	11+61.00	2064.00
11+61.00	TO	12+39.50	60.00
RAMP C7			
2+00.00	TO	2+14.25	63.00
2+14.25	TO	17+00.00	2641.33
RAMP C8			
1+00.00	TO	5+00.00	377.78
5+00.00	TO	24+04.42	3385.64
TOTAL			35642

SHOULDER REMOVAL

LOCATION			PAVED SHOULDER REMOVAL
			(SQ YD)
STA	TO	STA	
IL 111 (EX. STA.)			
IL 111 NORTHBOUND LT			
17+85.75	TO	21+84.45	354.40
22+36.29	TO	24+24.68	167.46
24+24.68	TO	25+87.25	225.79
25+87.25	TO	27+16.52	142.00
27+16.52	TO	29+10.70	129.45
29+10.70	TO	31+92.56	250.54
31+29.17	TO	32+39.57	69.50
32+39.57	TO	40+30.69	703.22
40+30.69	TO	41+66.58	163.88
45+64.90	TO	48+00.00	208.98
IL 111 NORTHBOUND RT			
21+84.45	TO	48+00.00	1162.47
IL 111 SOUTHBOUND LT			
21+84.45	TO	48+00.00	1162.47
IL 111 SOUTHBOUND RT			
17+17.75	TO	18+24.89	95.24
19+93.45	TO	21+25.90	170.00
21+25.90	TO	27+48.58	553.49
27+48.58	TO	28+87.95	87.00
28+87.95	TO	32+82.89	351.06
32+82.89	TO	34+35.90	176.33
34+35.90	TO	36+40.26	272.48
36+40.26	TO	39+80.77	302.68
39+80.77	TO	41+39.67	211.87
46+84.75	TO	48+00.00	102.44
RAMPS (EX. STA.)			
RAMP C1			
0+00.00	TO	2+63.79	234.48
2+63.79	TO	15+76.20	1749.88
15+76.20	TO	23+89.21	903.34
RAMP C2			
1+45.65	TO	2+50.00	98.55
2+50.00	TO	13+64.00	1485.33
13+64.00	TO	15+00.00	120.89
RAMP C3			
1+61.51	TO	3+05.68	128.15
3+05.68	TO	10+11.20	940.69
10+11.20	TO	11+22.78	99.18
RAMP C4			
5+02.56	TO	21+32.15	1448.52
21+32.15	TO	22+58.40	224.44
22+58.40	TO	26+45.36	
RAMP C5			
5+30.00	TO	19+37.31	1831.11
19+37.31	TO	19+86.26	68.00
RAMP C6			
1+73.30	TO	3+00.00	112.62
3+00.00	TO	11+73.00	1164.00
11+73.00	TO	12+39.50	59.11
RAMP C7			
1+91.50	TO	2+14.25	20.22
2+14.25	TO	15+46.43	1776.24
15+46.43	TO	16+55.60	97.04
RAMP C8			
1+00.00	TO	5+00.00	355.56
5+00.00	TO	23+00.00	2400.00
5+00.00	TO	24+04.42	272.00
SUB-TOTALS			22652

MEDIAN REMOVAL SCHEDULE

LOCATION			MEDIAN REMOVAL	COMB. CURB & GUTTER REMOVAL	REMOVING INLETS
STA	TO	STA	(SQ FT)	(FOOT)	(EACH)
IL 111 (EX. STA.)					
17+34.39	TO	17+96.91	148.00	125.04	
17+96.91	TO	19+66.36	2202.85	338.9	2
19+66.36	TO	21+50.00	3397.34	367.28	
21+50.00	TO	21+80.00		60	
SUB-TOTALS			5748	891	2

GUARDRAIL REMOVAL SCHEDULE

LOCATION			NB/SB EB/WB	SIDE	GUARDRAIL REMOVAL
STATION	**TO**	**STATION**	(FOOT)	LT/RT	(FOOT)
IL 111 (EX. STA.)					
28+12.84	TO	29+37.84		RT	125
28+26.32	TO	30+88.82		RT	262.5
29+24.40	TO	31+74.40		LT	250
29+76.00	TO	30+03.00		LT	27
30+55.20	TO	31+80.52		LT	125
I-270 (EX. STA.)					
398+83	TO	400+37	WB	LT	155
402+84	TO	404+82	WB	LT	200
402+90	TO	405+33		RT	245
398+06	TO	400+06	EB	RT	200
397+70	TO	400+00	EB	LT	230
402+51	TO	404+05	EB	RT	155
402+81	TO	404+77	EB	LT	196
TOTALS					2171

RIP RAP SCHEDULE

LOCATION			STONE RIPRAP CLASS A3	**COMMENTS**
STA	TO	STA	(SQ YD)	
IL 111 (EX. STA.)				
41+25.19	TO	48+00.00	1350.00	
SUB-TOTALS			1350	

TREE REMOVAL (SPECIAL) SCHEDULE

LOCATION	OFFSET	SIDE	TREE REMOVAL (SPECIAL)
(STATION)	(FEET)	(LT/RT)	(UNITS)
EXISTING IL 111			
26+10.75	288.84	LT	27
26+56.31	673.23	LT	33
27+86.77	133.44	LT	21
31+09.65	348.91	LT	24
31+75.37	127.87	LT	38
31+84.04	274.36	LT	19
32+07.47	110.99	LT	29
32+21.53	588.88	LT	16
33+08.43	600.40	LT	24
33+53.56	393.44	LT	24
34+81.38	216.17	RT	32
36+56.96	176.57	LT	21
42+20.00	136.00	RT	
TOTALS			308

HMA RESURFACING SCHEDULE

LOCATION			HMA SURFACE REMOVAL, 3.75"	BITUMINOUS MATERIALS (TACK COAT)	HMA BINDER COURSE, 2.25"	POLYMERIZED HMA SURFACE COURSE, 1.50"	LONGITUDINAL JOINT SEALANT
STA	TO	STA	(SQ YD)	(POUND)	(TON)	(TON)	(TON)
SOUTHBOUND							
541+66.62	TO	548+41.32	1799.20	44.98	226.70	156.17	674.70
NORTHBOUND							0.00
641+67.33	TO	642+47.38	213.47	5.34	26.90	18.53	80.05
642+47.38	TO	643+64.72	312.91	7.82	39.43	27.16	117.34
643+64.72	TO	648+24.40	1225.81	30.65	154.45	106.40	459.68
648+24.40	TO	648+42.38	47.95	1.20	6.04	4.16	17.98
TOTAL			3599	90	454	312	1350

CONCRETE MEDIAN 4"

LOCATION			CONCRETE MEDIAN SURFACE 4"	PROTECTIVE COAT	AGGREGATE BASE COURSE TYPE B, 4"
STA	to	STA	(SQ YD)	(SQ YD)	
NORTH MEDIAN					
517+95.52	TO	519+73.28	46.09	46.09	46.09
519+73.28	TO	524+84.71	1591.18	1591.18	1591.18
MEDIAN					0.00
526+01.21	TO	534+69.03	3353.11	3353.11	3353.11
SOUTH MEDIAN					0.00
535+93.46	TO	541+66.58	2013.93	2013.93	2013.93
RAMP A ISLAND					0.00
1115+56.58	TO	1116+66.81	690.53	690.53	690.53
RAMP B ISLAND					0.00
2000+24.84	TO	2001+42.41	853.39	853.39	853.39
RAMP C ISLAND					0.00
3315+84.93	TO	3314+96.76	550.49	550.49	550.49
RAMP D ISLAND					0.00
4400+23.09	TO	4401+40.24	872.58	872.58	872.58
TOTAL =			9971	9971	9971

EROSION CONTROL SCHEDULE

LOCATION			IT/RT	TEMP. EROSION. CONTROL. SEEDING	SEEDING, CL 2	NITROGEN FERTILIZER NUTRIENT	PHOSPHORUS FERTILIZER NUTRIENT	POTASSIUM FERTILIZER NUTRIENT	MULCH METHOD 2
STA	to	Sta		(lb)	(ac)	(lb)	(lb)	(lb)	(ac)
IL 111 (EX. STA.)									
17+75	to	21+91	LT	21	0.18	16.3	16.3	16.3	0.36
17+75	to	19+03	RT	6	0.05	4.8	4.8	4.8	0.10
40+35	to	48+00	LT	74	0.63	56.7	56.7	56.7	1.26
40+35	to	48+00	RT	53	0.45	40.7	40.7	40.7	0.90
RAMP A						0.0			
1102+72	to	1116+85	LT	434	3.71	333.7	333.7	333.7	7.42
1102+72	to	1116+85	RT	414	3.54	318.6	318.6	318.6	7.08
RAMP B						0.0			
2000+00	to	2014+62	LT	601	5.14	462.5	462.5	462.5	10.28
2000+00	to	2014+62	RT	614	5.25	472.1	472.1	472.1	10.50
RAMP C						0.0			
3302+32	to	3316+08	LT	499	4.26	383.6	383.6	383.6	8.52
3302+32	to	3316+08	RT	409	3.49	314.4	314.4	314.4	6.98
RAMP D									
4400+00	to	4414+52	LT	650	5.56	500.4	500.4	500.4	11.12
4400+00	to	4414+52	RT	426	3.64	327.3	327.3	327.3	7.28
I-270 WB (EX. STA.)									0.00
388+97	to	375+07	RT	76	0.65	58.2	58.2	58.2	1.30
TOTAL =				4277	37	3289	3289	3289	73

INLET AND PIPE PROTECTION SCHEDULE

LOCATION (EX. STA.)			INLET AND PIPE PROTECTION (EACH)	INLET FILTERS (EACH)
ROADWAY	STATION	OFFSET		
IL ROUTE 111	17+42.96	68.2' RT	1	
IL ROUTE 111	21+32.14	59.8' LT	1	
IL ROUTE 111	24+64.99	171.9' RT	1	
IL ROUTE 111	25+05.44	188.4' LT	1	
IL ROUTE 111	28+04.68	158.8' LT	1	
IL ROUTE 111	28+64.12	172.7' RT	1	
IL ROUTE 111	33+23.25	148.4' RT	1	
IL ROUTE 111	33+76.85	167.3' LT	1	
IL ROUTE 111	36+69.20	133.9' LT	1	
IL ROUTE 111	40+23.58	103.0' LT	1	
IL ROUTE 111	41+00.11	63.7' RT	1	
IL ROUTE 111	44+67.75	76.1' LT	1	
I-270	375+93.50	81.6' LT	1	
I-270	384+56.03	84.2' LT	1	
IL ROUTE 111	17+85.07	12.0' RT		1
IL ROUTE 111	18+01.76	14.1' RT		1
IL ROUTE 111	18+01.77	9.0' RT		1
IL ROUTE 111	18+69.90	14.0' RT		1
IL ROUTE 111	18+69.91	9.0' RT		1
IL ROUTE 111	19+01.76	8.5' RT		1
IL ROUTE 111	19+66.77	8.5' RT		1
IL ROUTE 111	20+06.98	6.1' RT		1
IL ROUTE 111	22+87.18	107.2' RT		1
IL ROUTE 111	24+59.89	54.8' RT		1
IL ROUTE 111	24+69.88	51.4' RT		1
IL ROUTE 111	25+37.56	100.0' RT		1
IL ROUTE 111	25+43.65	48.5' RT		1
IL ROUTE 111	26+19.89	50.2' RT		1
IL ROUTE 111	26+30.00	53.2' RT		1
IL ROUTE 111	26+44.18	113.5' RT		1
IL ROUTE 111	29+89.86	59.4' RT		1
IL ROUTE 111	30+00.00	59.4' RT		1
IL ROUTE 111	30+10.14	59.4' RT		1
IL ROUTE 111	30+98.19	58.2' RT		1
IL ROUTE 111	33+07.63	93.1' RT		1
IL ROUTE 111	34+38.02	48.4' RT		1
IL ROUTE 111	34+48.31	44.5' RT		1
IL ROUTE 111	34+92.53	79.7' RT		1
IL ROUTE 111	35+05.52	31.8' RT		1
IL ROUTE 111	35+54.06	39.7' RT		1
IL ROUTE 111	22+90.66	74.3' LT		1
IL ROUTE 111	23+46.45	7.3' LT		1
IL ROUTE 111	24+85.00	38.5' LT		1
IL ROUTE 111	25+57.05	74.4' LT		1
IL ROUTE 111	26+02.28	53.4' LT		1
IL ROUTE 111	26+12.46	56.9' LT		1
IL ROUTE 111	27+32.26	2.3' LT		1
IL ROUTE 111	29+89.99	59.4' LT		1
IL ROUTE 111	29+99.78	59.4' LT		1
IL ROUTE 111	30+09.82	59.4' LT		1
IL ROUTE 111	30+69.71	60.0' LT		1
IL ROUTE 111	32+91.99	10.6' LT		1
IL ROUTE 111	34+04.58	55.4' LT		1
IL ROUTE 111	34+14.14	51.5' LT		1
IL ROUTE 111	34+79.47	72.7' LT		1
IL ROUTE 111	35+57.07	53.3' LT		1
IL ROUTE 111	35+67.62	54.7' LT		1
IL ROUTE 111	36+83.47	4.3' LT		1
TOTALS			14	44

DITCH CHECKS SCHEDULE (1 OF 2)

LOCATION (EX. STA.)			TEMPORARY DITCH CHECKS (FOOT)
ROADWAY	STATION	OFFSET	
IL ROUTE 111	18+32.14	58.4' LT	13.2
IL ROUTE 111	19+32.14	59.9' LT	13.2
IL ROUTE 111	20+32.14	60.7' LT	13.2
IL ROUTE 111	39+23.38	118.0' LT	12.8
IL ROUTE 111	40+50	93.4' LT	31.3
IL ROUTE 111	41+50	90.4' LT	30.8
IL ROUTE 111	42+50	84.3' LT	30.3
IL ROUTE 111	43+50	78.7' LT	29.8
IL ROUTE 111	44+50	78.1' LT	29.3
IL ROUTE 111	45+67.59	72.2' LT	11.3
IL ROUTE 111	46+67.54	68.2' LT	11.3
IL ROUTE 111	47+67.45	64.6' LT	11.3
IL ROUTE 111	42+00.00	0	10.3
IL ROUTE 111	43+00.00	0	10.3
IL ROUTE 111	44+00.00	0	10.3
IL ROUTE 111	45+00.00	0	10.3
IL ROUTE 111	46+00.00	0	10.3
IL ROUTE 111	47+00.00	0	10.3
IL ROUTE 111	48+00.00	0	9.9
IL ROUTE 111	49+00.00	0	10.1
IL ROUTE 111	21+87.18	87.6' RT	12.2
IL ROUTE 111	23+87.18	112.6' RT	12.2
IL ROUTE 111	27+44.18	101.3' RT	12.2
IL ROUTE 111	32+07.63	79.4' RT	12.2
IL ROUTE 111	37+00.00	85.4' RT	12.2
IL ROUTE 111	38+00.00	69.3' RT	12.2
IL ROUTE 111	39+00.00	65.9' RT	12.2
IL ROUTE 111	38+94.96	124.3' RT	16.5
IL ROUTE 111	40+00.00	64.0' RT	12.2
IL ROUTE 111	39+95.53	122.3' RT	16.3
IL ROUTE 111	40+95.53	122.8' RT	16.3
IL ROUTE 111	41+95.53	123.2' RT	16.0
IL ROUTE 111	43+34.71	95.0' RT	13.3
IL ROUTE 111	44+34.78	82.1' RT	14.6
IL ROUTE 111	45+34.84	71.5' RT	12.0
I-270	377+56.03	86.7' LT	12.3
I-270	378+56.03	90.9' LT	12.3
I-270	379+56.03	92.9' LT	12.3
I-270	380+56.03	93.5' LT	12.3
I-270	381+56.03	93.3' LT	12.3
I-270	382+56.03	94.2' LT	12.3
I-270	383+56.03	93.9' LT	12.3
LOCATION (PROP. STA.)			
RAMP D	4410+00	51.9' LT	15.9
RAMP D	4410+28	44.7' LT	13.3
RAMP D	4410+56	38.8' LT	9.2
RAMP D	4410+84	33.8' LT	9.4
RAMP D	4411+12	28..7' LT	9.5
RAMP A	1106+87.93	35.2' LT	9.2
RAMP A	1107+32.64	42.3' LT	8.7
RAMP A	1107+62.29	48.3' LT	8.2
RAMP A	1107+83.47	53.6' LT	8.2
RAMP A	1108+50.00	64.7' LT	19.2
RAMP A	1107+50.00	35.6' RT	27.4
RAMP B	2011+84.00	21.7' LT	9.4
RAMP B	2011+42.00	29.2' LT	8.6
RAMP B	2011+19.00	32.9' LT	9.1
RAMP B	2010+96.00	37.1' LT	9.7
RAMP B	2010+73.00	40.7' LT	10.5
RAMP B	2010+50.00	45.1' LT	11.2
SCHEDULE 1 SUBTOTAL			805.3

DITCH CHECKS SCHEDULE (2 OF 2)

LOCATION (PROP. STA.)			TEMPORARY DITCH CHECKS (FOOT)
ROADWAY	STATION	OFFSET	
RAMP B	2012+00.00	48.5' RT	16.9
RAMP B	2013+00.00	42.7' RT	17.3
RAMP B	2014+00.00	37.7' RT	16.8
RAMP C	3305+50.00	33.0' LT	18.2
RAMP C	3306+50.00	44.6' LT	18.2
RAMP C	3303+00.00	26.9' RT	17.3
RAMP C	3304+00.00	30.1' RT	17.3
RAMP C	3305+00.00	32.9' RT	17.3
RAMP C	3306+00.00	38.5' RT	16.3
RAMP C	3307+00.00	52.4' RT	16.3
RAMP C	3308+00.00	65.8' RT	16.3
RAMP C	3309+00.00	73.1' RT	17.3
RAMP C	3310+00.00	71.9' RT	17.3
RAMP C	3311+00.00	71.0' RT	17.3
RAMP C	3312+00.00	69.3' RT	17.3
SCHEDULE 2 SUBTOTAL			257.4
TOTALS			1063

EROSION CONTROL SCHEDULE

LOCATION					PERIMETER EROSION BARRIER (FOOT)
ROADWAY	STATION	OFFSET	STATION	OFFSET	
I-270/RAMP D	384+50.00	100.0' LT	4409+00.00	77.8' RT	1602.7
RAMP A	1102+99.94	30.0' RT	1107+13.07	60.2' RT	409.2
IL ROUTE 111	45+50.00	58.1' RT	48+10.00	58.0' RT	259.9
TOTALS					2272

MODEL: Default
FILE NAME: pw:\\idot-pw.bentley.com:PWIDOT\Documents\IDOT Offices\District 8\Projects\76818\CADData\CADsheets\0876818-sht-schedule.dgn

USER NAME = Jon.Dintelman	DESIGNED -	REVISED -	
	DRAWN -	REVISED -	
PLOT SCALE = 100.0000 ' / in.	CHECKED -	REVISED -	
PLOT DATE = 5/4/2024	DATE -	REVISED -	

STATE OF ILLINOIS
DEPARTMENT OF TRANSPORTATION

SCHEDULES

SCALE: _____ | SHEET __ OF __ SHEETS | STA. _____ TO STA. _____

F.A.I. RTE.	SECTION	COUNTY	TOTAL SHEETS	SHEET NO.
270	60-3K-1	MADISON	576	41

CONTRACT NO. 76818

ILLINOIS | FED. AID PROJECT

PAVEMENT MARKING NORTHBOUND LANES

LOCATION			LOCATION	DESCRIPTION	PREFORMED PLASTIC PAVEMENT MARKING					GROOVING FOR RECESSED PAVEMENT MARKING					RAISED REFLECTIVE PAVEMENT MARKERS	RAISED REFLECTIVE PAVEMENT MARKER REMOVAL
					6"	8"	12"	24"	LETTERS AND SYMBOLS	7"	9"	13"	25"	LETTERS AND SYMBOLS		
STA.	TO	STA.			FOOT	FOOT	FOOT	FOOT	SQ FT	FOOT	FOOT	FOOT	FOOT	SQ FT	EACH	EACH
IL 111 NORTHBOUND																
617+33.33	TO	621+17.33	MEDIAN	SOLID YELLOW		444	268				444	268			10	
617+41.24	TO	619+50.00	LEFT TURN LANE	SOLID WHITE	208					208					6	
617+41.25			STOP BAR	SOLID WHITE				12.5		0			12.5			
617+83.23	TO	622+50.00	LANE LINE	SKIP-DASH WHITE (10-30)	117					117					12	
618+07.00			LEFT TURN LANE	LARGE LT TURN ARROW					15.6					15.6		
619+22.00			LEFT TURN LANE	LARGE LT TURN ARROW					15.6					15.6		
619+50.00	TO	622+50.00	LEFT TURN LANE	WHITE DOTTED (2-6)	75					75						
620+42.00			LEFT TURN LANE	LARGE LT TURN ARROW					15.6					15.6		
620+42.00			LEFT THRU LANE	LARGE THRU ARROW					11.5					11.5		
620+42.00			RIGHT THRU LANE	LARGE THRU ARROW					11.5					11.5		
622+50.00	TO	624+87.20	LANE LINE	SKIP-DASH WHITE (10-30)	60					60					12	
624+31.26	TO	624+54.27	STRIPED ISLAND	SOID WHITE	24					24						
624+77.05	TO	624+82.58	STRIPED ISLAND	SOLID WHITE	6					6						
624+87.20	TO	626+10.00	LANE LINE	WHITE DOTTED (2-6)	30					30						
624+97.00			LEFT THRU LANE	LARGE THRU ARROW					11.5					11.5		
624+97.00			RIGHT THRU LANE	LARGE THRU ARROW					11.5					11.5		
626+10.00			STOP BAR	SOLID WHITE				30					30			
626+10.00	TO	628+20.75	LANE LINE	SKIP-DASH WHITE (10-30)	53					53					6	
626+36.00			LEFT THRU LANE	LARGE THRU ARROW					11.5					11.5		
626+36.00			RIGHT THRU LANE	LARGE THRU ARROW					11.5					11.5		
626+70.74	TO	628+20.75	LEFT TURN LANE	SOLID WHITE	156					156					4	
627+10.84			LEFT TURN LANE	LARGE LT TURN ARROW					15.6					15.6		
628+20.75	TO	630+94.77	LANE LINE	WHITE DOTTED (2-6)	69					69						
628+20.75	TO	634+58.78	LANE LINE	SKIP-DASH WHITE (10-30)	160					160					16	
628+21.00			LEFT TURN LANE	LARGE LT TURN ARROW					15.6					15.6		
628+21.00			LEFT THRU LANE	LARGE THRU ARROW					11.5					11.5		
628+21.00			RIGHT THRU LANE	LARGE THRU ARROW					11.5					11.5		
629+46.00			LEFT TURN LANE	LARGE LT TURN ARROW					15.6					15.6		
630+94.77	TO	634+73.78	LANE LINE	SKIP-DASH WHITE (10-30)	95					95					9	
630+96.00			LEFT TURN LANE	LARGE LT TURN ARROW					15.6					15.6		
633+30.33	TO	634+05.50	RADIUS	WHITE DOTTED (2-6)	19					19						
634+05.50	TO	634+19.81	STRIPED ISLAND	SOLID WHITE	14					14						
634+42.21	TO	634+42.23	STRIPED ISLAND	SOLID WHITE	3					3						
634+58.78	TO	635+75.35	LANE LINE	WHITE DOTTED (2-6)	29					29						
634+70.00			LEFT THRU LANE	LARGE THRU ARROW					11.5					11.5		
634+70.00			MID THRU LANE	LARGE THRU ARROW					11.5					11.5		
634+70.00			RIGHT THRU LANE	LARGE THRU ARROW					11.5					11.5		
634+73.78	TO	635+75.35	LANE LINE	WHITE DOTTED (2-6)	25					25						
635+75.35			STOP BAR	SOLID WHITE				45		0			45			
635+77.00	TO	637+90.00	LANE LINE	SKIP-DASH WHITE (10-30)	53					53					6	
635+77.00	TO	637+90.00	LANE LINE	SKIP-DASH WHITE (10-30)	53					53					6	
636+03.70			LEFT THRU LANE	LARGE THRU ARROW					11.5					11.5		
636+03.70			MID THRU LANE	LARGE THRU ARROW					11.5					11.5		
636+03.70			RIGHT THRU LANE	LARGE THRU ARROW					11.5					11.5		
636+20.76	TO	637+90.00	RIGHT TURN LANE	SOLID WHITE	175					175					4	
636+46.00			RIGHT TURN LANE	LARGE RT TURN ARROW					15.6					15.6		
637+90.00			LEFT THRU LANE	LARGE THRU ARROW					11.5					11.5		
637+90.00			MID THRU LANE	LARGE THRU ARROW					11.5					11.5		
637+90.00			RIGHT THRU LANE	LARGE THRU ARROW					11.5					11.5		
637+90.00			RIGHT TURN LANE	LARGE RT TURN ARROW					15.6					15.6		
637+90.00	TO	643+64.28	RIGHT TURN LANE	WHITE DOTTED (2-6)	105					105						
637+90.00	TO	644+64.27	LANE LINE	SKIP-DASH WHITE (10-30)	169					169					18	
637+90.00	TO	648+54.38	LANE LINE	SKIP-DASH WHITE (10-30)	266					266					26	9
639+30.00			RIGHT TURN LANE	LARGE RT TURN ARROW					15.6					15.6		
640+80.00			RIGHT TURN LANE	LARGE RT TURN ARROW					15.6					15.6		
642+30.00			RIGHT TURN LANE	LARGE RT TURN ARROW					15.6					15.6		
SUB TOTAL					1964	444	268	88	383	1964	444	268	88	383	135	9

MODEL: Default
FILE NAME: pw:\\ildot-pw.bentley.com:PWIDOT\Documents\IDOT Offices\District 8\Projects\D87681B\CADData\CADsheets\D87681B-sht-schedule.dgn

USER NAME = Jon.Dintelman	DESIGNED - _____	REVISED - _____	
	DRAWN - _____	REVISED - _____	
PLOT SCALE = 100.0000 ' / in.	CHECKED - _____	REVISED - _____	
PLOT DATE = 5/4/2024	DATE - _____	REVISED - _____	

STATE OF ILLINOIS
DEPARTMENT OF TRANSPORTATION

SCHEDULES

SCALE: _____ SHEET __ OF __ SHEETS STA. _____ TO STA. _____

F.A.I. RTE.	SECTION	COUNTY	TOTAL SHEETS	SHEET NO.
270	60-3K-1	MADISON	576	42

CONTRACT NO. 76818

ILLINOIS FED. AID PROJECT

PAVEMENT MARKING SOUTHBOUND LANES

LOCATION			LOCATION	DESCRIPTION	PREFORMED PLASTIC PAVEMENT MARKING					GROOVING FOR RECESSED PAVEMENT MARKING					RAISED REFLECTIVE PAVEMENT MARKERS	RAISED REFLECTIVE PAVEMENT MARKER REMOVAL
					6"	8"	12"	24"	LETTERS AND SYMBOLS	7"	9"	13"	25"	LETTERS AND SYMBOLS		
STA.	TO	STA.			FOOT	FOOT	FOOT	FOOT	SQ FT	FOOT	FOOT	FOOT	FOOT	SQ FT	EACH	EACH
IL 111 SOUTHBOUND																
517+40.00	TO	517+75.00	MEDIAN												10	
517+75.00	TO	520+70.53	LANE LINE	SKIP DASH WHITE (10 30)	74					74					8	
518+00.50	TO	520+70.53	LANE LINE	WHITE DOTTED (2-6)	68					68						
520+70.53	TO	522+50.53	RIGHT TURN LANE	WHITE DOTTED (2-6)	45					45						
520+70.53	TO	522+50.53	LANE LINE	WHITE DOTTED (2-6)	45					45						
520+70.53	TO	522+50.53	LANE LINE	SKIP-DASH WHITE (10-30)	45					45					4	
520+70.53	TO	522+50.53	HATCHED AREA	SOLID WHITE	175		82			175		82				
522+50.53	TO	524+39.52	RIGHT TURN LANE	SOLID WHITE	195					195						
522+50.53	TO	524+84.50	LANE LINE	SKIP-DASH WHITE (10-30)	60					60					6	
522+50.53	TO	524+84.50	LANE LINE	SKIP-DASH WHITE (10-30)	60					60					6	
524+17.00			RIGHT TURN LANE	LARGE RT TURN ARROW					15.6					15.6		
524+58.50			LEFT THRU LANE	LARGE THRU ARROW					11.5					11.5		
524+58.50			MID THRU LANE	LARGE THRU ARROW					11.5					11.5		
524+58.50			RIGHT THRU LANE	LARGE THRU ARROW					11.5					11.5		
524+84.50			STOP BAR	SOLID WHITE				45					45			
524+85.50	TO	525+71.00	LANE LINE	WHITE DOTTED (2-6)	22					22						
524+85.50	TO	525+71.00	LANE LINE	WHITE DOTTED (2-6)	22					22						
525+71.00	TO	529+46.16	LANE LINE	SKIP-DASH WHITE (10-30)	94					94					10	
525+71.00	TO	529+46.16	LANE LINE	SKIP-DASH WHITE (10-30)	94					94					10	
525+92.00			LEFT THRU LANE	LARGE THRU ARROW					11.5					11.5		
525+92.00			MID THRU LANE	LARGE THRU ARROW					11.5					11.5		
525+92.00			RIGHT THRU LANE	LARGE THRU ARROW					11.5					11.5		
526+38.35	TO	526+44.78	STRIPED ISLAND	SOLID WHITE	7					7						
526+64.57	TO	526+71.94	STRIPED ISLAND	SOLID WHITE	8					8						
526+71.94	TO	527+46.24	RADIUS	WHITE DOTTED (2-6)	21					21						
529+46.16	TO	533+45.45	LEFT TURN LANE	WHITE DOTTED (2-6)	100					100						
529+46.16	TO	534+63.37	LANE LINE	SKIP-DASH WHITE (10-30)	130					130					12	
532+10.33			LEFT TURN LANE	LARGE LT TURN ARROW					15.6					15.6		
533+36.00			LEFT TURN LANE	LARGE LT TURN ARROW					15.6					15.6		
533+36.00			LEFT THRU LANE	LARGE THRU ARROW					11.5					11.5		
533+36.00			RIGHT THRU LANE	LARGE THRU ARROW					11.5					11.5		
533+45.45	TO	534+15.93	STRIPED ISLAND	SOLID WHITE	73				15.6	73				15.6		
534+39.00			LEFT THRU LANE	LARGE THRU ARROW					11.5					11.5		
534+39.00			RIGHT THRU LANE	LARGE THRU ARROW					11.5					11.5		
534+63.37			STOP BAR	SOLID WHITE				30					30			
534+63.37	TO	535+93.00	LANE LINE	WHITE DOTTED (2-6)	33					33						
535+82.00			LEFT THRU LANE	LARGE THRU ARROW					11.5					11.5		
535+82.00			RIGHT THRU LANE	LARGE THRU ARROW					11.5					11.5		
536+05.08	TO	536+11.09	STRIPED ISLAND	SOLID WHITE	6					6						
536+11.08	TO	536+49.13	STRIPED ISLAND	SOLID WHITE	17					17						
535+93.00	TO	548+41.32	LANE LINE	SKIP-DASH WHITE (10-30)	312					312					30	9
SUB TOTAL					1706	0	82	75	200	1706	0	82	75	200	96	9

PAVEMENT MARKING RAMP A

LOCATION			LOCATION	DESCRIPTION	PREFORMED PLASTIC PAVEMENT MARKING					GROOVING FOR RECESSED PAVEMENT MARKING					RAISED REFLECTIVE PAVEMENT MARKERS	RAISED REFLECTIVE PAVEMENT MARKER REMOVAL
					6"	8"	12"	24"	LETTERS AND SYMBOLS	7"	9"	13"	25"	LETTERS AND SYMBOLS		
STA.	TO	STA.			FOOT	FOOT	FOOT	FOOT	SQ FT	FOOT	FOOT	FOOT	FOOT	SQ FT	FOOT	EACH
RAMP A																
1101+66.41	TO	1106+31.66	EDGE LINE GORE	SOLID WHITE		465					465					
1106+31.66	TO	1107+98.43	EDGE LINE RT	SOLID WHITE	167					167						
1106+31.66	TO	1107+98.43	EDGE LINE LT	SOLID YELLOW	167					167						
1107+98.43	TO	1114+47.37	EDGE LINE RT	SOLID WHITE	662					662						
1107+98.43	TO	1114+60.63	EDGE LINE LT	SOLID YELLOW	649					649						
1110+38.43	TO	1114+90.96	LANE LINE	SKIP-DASH WHITE (10-30)	113					113					12	
1110+38.43	TO	1115+61.77	LANE LINE	SOLID WHITE	538					538					13	
1110+38.43	TO	1114+77.43	LANE LINE	SKIP-DASH WHITE (10-30)	110					110					12	
1113+73.25			RIGHT TURN LANE	LARGE RT TURN ARROW					15.6					15.6		
1113+73.25			RIGHT TURN LANE	LARGE RT TURN ARROW					15.6					15.6		
1113+73.25			LEFT TURN LANE	LARGE LT TURN ARROW					15.6					15.6		
1113+73.25			LEFT TURN LANE	LARGE LT TURN ARROW					15.6					15.6		
1114+47.37	TO	1115+69.40	HATCHED RADIUS LT	SOLID YELLOW	222					222						
1114+47.37	TO	1115+69.40	HATCHED AREA LT	SOLID YELLOW			172					172				
1114+77.43	TO	1115+92.60	STRIPED ISLAND LT	SOLID WHITE	154					154					4	
1114+77.43	TO	1115+96.17	STRIPED ISLAND LT	SOLID WHITE	132					132					4	
1114+77.43	TO	1115+96.17	STRIPED ISLAND LT	SOLID WHITE			74					74				
1114+60.63	TO	1116+69.98	HATCHED RADIUS RT	SOLID WHITE	292					292		0				
1114+60.63	TO	1116+69.98	HATCHED AREA LT	SOLID WHITE			354					354				
1114+90.96	TO	1116+60.21	STRIPED ISLAND RT	SOLID WHITE	181					181					5	
1114+90.96	TO	1116+60.66	STRIPED ISLAND RT	SOLID WHITE	210					210					5	
1114+90.96	TO	1116+60.66	STRIPED ISLAND RT	SOLID WHITE			69					69				
1114+95.06			LEFT TURN LANE	LARGE LT TURN ARROW					15.6					15.6		
1114+96.61			RIGHT TURN LANE	LARGE RT TURN ARROW					15.6					15.6		
1114+97.40			LEFT TURN LANE	LARGE LT TURN ARROW					15.6					15.6		
1114+97.71			RIGHT TURN LANE	LARGE RT TURN ARROW					15.6					15.6		
1115+82.68			LEFT TURN LANE	LARGE LT TURN ARROW					15.6					15.6		
1115+70.90			LEFT TURN LANE	LARGE LT TURN ARROW					15.6					15.6		
1115+87.73	TO	1116+06.49	STRIPED ISLAND LT	SOLID WHITE	38					38						
1115+81.35			STOP BAR	SOLID WHITE				16					16			
1115+94.97			STOP BAR	SOLID WHITE				16					16			
1116+41.25	TO	1116+62.41	STRIPED ISLAND RT	SOLID WHITE	27					27						
1116+30.51			STOP BAR	SOLID WHITE				16					16			
1116+48.14			STOP BAR	SOLID WHITE				16					16			
I-270 (WB)																
412+53.58	TO	416+74.33	EDGE LINE GORE	SOLID WHITE		421					421					
										0						
SUB TOTAL					3662	421	669	64	156	3662	421	669	64	156	55	

PAVEMENT MARKING RAMP B

LOCATION			LOCATION	DESCRIPTION	PREFORMED PLASTIC PAVEMENT MARKING					GROOVING FOR RECESSED PAVEMENT MARKING					RAISED REFLECTIVE PAVEMENT MARKERS	RAISED REFLECTIVE PAVEMENT MARKER REMOVAL
					6"	8"	12"	24"	LETTERS AND SYMBOLS	7"	9"	13"	25"	LETTERS AND SYMBOLS		
STA.	TO	STA.			FOOT	FOOT	FOOT	FOOT	SQ FT	FOOT	FOOT	FOOT	FOOT	SQ FT	EACH	EACH
RAMP B																
2000+47.92	TO	2002+11.01	HATCHED RADIUS RT	SOLID WHITE	239					239						
2000+47.92	TO	2002+11.01	HATCHED AREA RT	SOLID WHITE			226					226				
2001+07.09	TO	2002+14.54	HATCHED RADIUS LT	SOLID WHITE	223					223						
2001+07.09	TO	2002+14.54	HATCHED AREA LT	SOLID WHITE			169					169				
2001+30.15	TO	2002+14.54	HATCHED RADIUS LT	SOLID YELLOW	220					220						
2001+30.15	TO	2002+14.54	HATCHED AREA LT	SOLID YELLOW			270					270				
2002+11.01	TO	2014+30.32	EDGE LINE RT	SOLID WHITE	1220					1220						
2002+14.54	TO	2003+76.01	LANE LINE	SOLID WHITE	218					218					6	
2002+14.54	TO	2007+75.93	EDGE LINE LT	SOLID YELLOW	562					562						
2002+14.54	TO	2007+75.93	HATCHED AREA LT	SOLID YELLOW			858					858				
2003+75.00			LANE DROP ARROW	SOLID WHITE					41.5					41.5		
2003+76.01	TO	2007+75.93	LANE LINE	WHITE DOTTED (2-6)	410					410						
2005+44.50			LANE DROP ARROW	SOLID WHITE					41.5					41.5		
2007+75.93	TO	2011+75.38	EDGE LINE LT	SOLID YELLOW	103					103						
2007+75.93	TO	2011+75.38	HATCHED AREA LT	SOLID YELLOW			540					540				
2011+75.38	TO	2012+72.41	EDGE LINE LT	SOLID YELLOW	97					97						
2012+72.41	TO	2015+72.07	EDGE LINE GORE	SOLID WHITE		300					300					
I-270 (EB)																
411+77.57	TO	414+66.13	EDGE LINE GORE	SOLID WHITE		290					290					
414+66.13	TO	417+12.24	LANE LINE	WHITE DOTTED (2-6)		63					63					
SUB TOTAL					3292	653	2063		83	3292	653	2063		83	6	

MODEL: Default
FILE NAME: pw:\\ildot-pw.bentley.com:PWIDOT\Documents\IDOT Offices\District 8\Projects\D87681B\CADData\CADsheets\D87681B-sht-schedule.dgn

USER NAME = Jon.Dintelman	DESIGNED - _____	REVISED - _____	**STATE OF ILLINOIS DEPARTMENT OF TRANSPORTATION**
	DRAWN - _____	REVISED - _____	
PLOT SCALE = 100.0000 ' / in.	CHECKED - _____	REVISED - _____	
PLOT DATE = 5/4/2024	DATE - _____	REVISED - _____	

SCHEDULES

SCALE: _____ SHEET __ OF __ SHEETS STA. _____ TO STA. _____

F.A.I. RTE.	SECTION	COUNTY	TOTAL SHEETS	SHEET NO.
270	60-3K-1	MADISON	576	45

CONTRACT NO. 76818

ILLINOIS FED. AID PROJECT

PAVEMENT MARKING RAMP C

LOCATION			LOCATION	DESCRIPTION	PREFORMED PLASTIC PAVEMENT MARKING					GROOVING FOR RECESSED PAVEMENT MARKING					RAISED REFLECTIVE PAVEMENT MARKERS	RAISED REFLECTIVE PAVEMENT MARKER REMOVAL
					6"	8"	12"	24"	LETTERS AND SYMBOLS	7"	9"	13"	25"	LETTERS AND SYMBOLS		
STA.	TO	STA.			FOOT	FOOT	FOOT	FOOT	SQ FT	FOOT	FOOT	FOOT	FOOT	SQ FT	EACH	EACH
RAMP C																
3301+95.52	TO	3304+71.39	EDGE LINE LT GORE	SOLID WHITE		276					276					
3304+71.39	TO	3308+01.84	EDGE LINE LT	SOLID YELLOW	527					527						
3302+75.00	TO	3308+01.84	EDGE LINE RT	SOLID WHITE	527					527						
3308+01.84	TO	3313+80.00	EDGE LINE LT	SOLID YELLOW	578					578						
3308+01.84	TO	3313+91.76	EDGE LINE RT	SOLID WHITE	590					590						
3309+61.84	TO	3314+20.00	LANE LINE	SKIP-DASH WHITE (10-30)	115					115					12	
3309+61.84	TO	3311+79.74	LANE LINE	SKIP-DASH WHITE (10-30)	55					55					6	
3310+74.50	TO	3314+24.85	LANE LINE	SKIP-DASH WHITE (10-30)	88					88					10	
3311+79.74	TO	3314+59.08	LANE LINE	SOLID WHITE	279					279						
3312+04.45			RIGHT TURN LANE	LARGE RT TURN ARROW					15.6					15.6		
3312+04.45			RIGHT TURN LANE	LARGE RT TURN ARROW					15.6					15.6		
3312+04.45			LEFT TURN LANE	LARGE LT TURN ARROW					15.6					15.6		
3312+04.45			LEFT TURN LANE	LARGE LT TURN ARROW					15.6					15.6		
3313+29.45			RIGHT TURN LANE	LARGE RT TURN ARROW					15.6					15.6		
3313+29.45			RIGHT TURN LANE	LARGE RT TURN ARROW					15.6					15.6		
3313+29.45			LEFT TURN LANE	LARGE LT TURN ARROW					15.6					15.6		
3313+29.45			LEFT TURN LANE	LARGE LT TURN ARROW					15.6					15.6		
3313+91.76	TO	3315+49.45	HATCHED RADIUS RT	SOLID WHITE	279					279						
3313+91.76	TO	3315+49.45	HATCHED AREA RT	SOLID WHITE			275					275				
3313+80.00	TO	3315+30.62	HATCHED RADIUS LT	SOLID YELLOW	242					242						
3313+80.00	TO	3315+30.62	HATCHED AREA LT	SOLID YELLOW			167					167				
3314+20.00	TO	3315+43.06	STRIPED ISLAND LT	SOLID WHITE	160					160					4	
3314+20.00	TO	3315+47.57	STRIPED ISLAND LT	SOLID WHITE	152					152					4	
3314+20.00	TO	3315+47.57	STRIPED ISLAND LT	SOLID WHITE			65					65				
3314+59.08	TO	3315+17.17	LANE LINE	SOLID WHITE	68					68						
3314+59.08	TO	3315+21.79	LANE LINE	SOLID WHITE	68					68						
3314+24.85	TO	3315+55.86	STRIPED ISLAND RT	SOLID WHITE												
3314+24.85	TO	3315+59.60	STRIPED ISLAND RT	SOLID WHITE	166					166					4	
3314+24.85	TO	3315+59.60	STRIPED ISLAND RT	SOLID WHITE	172		78			172		78			4	
3314+53.00			LARGE LT TURN ARROW	SOLID WHITE					15.6					15.6		
3314+54.00			LARGE RT TURN ARROW	SOLID WHITE					15.6					15.6		
3314+58.00			LARGE LT TURN ARROW	SOLID WHITE					15.6					15.6		
3314+58.00			LARGE RT TURN ARROW	SOLID WHITE					15.6					15.6		
3315+14.00			LARGE LT TURN ARROW	SOLID WHITE					15.6					15.6		
3315+01.00			LARGE LT TURN ARROW	SOLID WHITE					15.6					15.6		
3315+12.50			LARGE RT TURN ARROW	SOLID WHITE					15.6					15.6		
3315+22.00			LARGE RT TURN ARROW	SOLID WHITE					15.6					15.6		
3315+17.00			STOP BAR	SOLID WHITE				16					16			
3315+29.75			STOP BAR	SOLID WHITE				16					16			
3315+31.50			STOP BAR	SOLID WHITE				16					16			
3315+39.50			STOP BAR	SOLID WHITE				16					16			
I-270 (EB)																
386+69.56	TO	389+46.52	EDGE LINE GORE	SOLID WHITE		277					277					
SUB TOTAL					4066	553	585	64	250	4066	553	585	64	250	44	

PAVEMENT MARKING RAMP D

LOCATION			LOCATION	DESCRIPTION	PREFORMED PLASTIC PAVEMENT MARKING					GROOVING FOR RECESSED PAVEMENT MARKING					RAISED REFLECTIVE PAVEMENT MARKERS	RAISED REFLECTIVE PAVEMENT MARKER REMOVAL
					6"	8"	12"	24"	LETTERS AND SYMBOLS	7"	9"	13"	25"	LETTERS AND SYMBOLS		
STA.	TO	STA.			FOOT	FOOT	FOOT	FOOT	SQ FT	FOOT	FOOT	FOOT	FOOT	SQ FT	EACH	EACH
RAMP D																
4400+80.28	TO	4402+23.36	HATCHED RADIUS LT	SOLID YELLOW	230					230						
4400+80.28	TO	4402+23.36	HATCHED AREA LT	SOLID YELLOW			164					164				
4400+86.33	TO	4402+41.34	HATCHED RADIUS RT	SOLID WHITE	251					251						
4400+86.33	TO	4402+41.34	HATCHED AREA RT	SOLID WHITE			290					290				
4401+52.12	TO	4403+74.12	LANE LINE	SOLID WHITE	222					222					6	
4402+12.00			LANE DROP ARROW	SOLID WHITE					41.5					41.5		
4403+60.00			LANE DROP ARROW	SOLID WHITE					41.5					41.5		
4402+23.36	TO	4407+74.12	EDGE LINE LT	SOLID YELLOW	540					540						
4402+23.36	TO	4407+74.12	EDGE LINE RT	SOLID WHITE	565					565						
4403+74.12	TO	4407+74.12	LANE LINE	WHITE DOTTED (2-6)	138					138						
4407+74.12	TO	4411+38.00	EDGE LINE LT	SOLID YELLOW	364					364						
4407+74.12	TO	4412+55.00	EDGE LINE RT	SOLID WHITE	479					479						
4411+38.00	TO	4412+95.09	EDGE LINE GORE	SOLID WHITE	1540	157				1540	157					
I-270 (WB)																
375+54.43	TO	390+94.26	EDGE LINE	SOLID WHITE												
378+64.00	TO	390+54.95	LANE LINE	WHITE DOTTED (2-6)	298					298						
390+54.95	TO	392+15.08	EDGE LINE GORE	SOLID WHITE		160					160					
SUB TOTAL					4627	317	454	0	83	4627	317	454	0	83	6	

TEMPORARY & PERMANENT PAVEMENT MARKING COMBINED

LOCATION			PREFORMED PLASTIC PAVEMENT MARKING					GROOVING FOR RECESSED PAVEMENT MARKING					RAISED REFLECTIVE PAVEMENT MARKERS	RAISED REFLECTIVE PAVEMENT MARKER REMOVAL	PAVEMENT MARKING REMOVAL - WATER BLASTING
			6"	8"	12"	24"	LETTERS AND SYMBOLS	7"	9"	13"	25"	LETTERS AND SYMBOLS			
STA.	TO	STA.	FOOT	FOOT	FOOT	FOOT	SQ FT	FOOT	FOOT	FOOT	FOOT	SQ FT	EACH	EACH	SQ FT
IL 111 NORTHBOUND			1964	444	268	88	383	1964	444	268	88	383	135	9	2104
IL 111 SOUTHBOUND			1706	0	82	75	200	1706	0	82	75	200	96	9	1285
RAMP A			3662	421	669	64	156	3662	421	669	64	156	55	0	3065
RAMP B			3292	653	2063	0	83	3292	653	2063	0	83	6	0	4227
RAMP C			4066	553	585	64	250	4066	553	585	64	250	44	0	3364
RAMP D			4627	317	454	0	83	4627	317	454	0	83	6	0	3062
TOTALS			19317	2388	4121	291	1155	19317	2388	4121	291	1155	342	18	17107

MODEL: Default
FILE NAME: pw:\\ildot-pw.bentley.com:PWIDOT\Documents\IDOT Offices\District 8\Projects\D876818\CADData\CADsheets\D876818-sht-schedule.dgn

USER NAME = Jon.Dintelman	DESIGNED - _____	REVISED - _____	STATE OF ILLINOIS DEPARTMENT OF TRANSPORTATION
	DRAWN - _____	REVISED - _____	
PLOT SCALE = 100.0000 ' / in.	CHECKED - _____	REVISED - _____	
PLOT DATE = 5/4/2024	DATE - _____	REVISED - _____	

SCHEDULES

SCALE: _____ SHEET __ OF __ SHEETS STA. _____ TO STA. _____

F.A.I. RTE.	SECTION	COUNTY	TOTAL SHEETS	SHEET NO.
270	60-3K-1	MADISON	576	47
		CONTRACT NO. 76818		
		ILLINOIS FED. AID PROJECT		

GUARDRAIL SCHEDULE

LOCATION	SIDE	NB/SB EB/WB	LON	SPBGR, TYPE A 6' POSTS	LONG-SPAN OVER CULVERT 12'-6" SPAN	TRAFFIC BARRIER TERMINAL TYPE 1, (SPECIAL) TANGENT	TRAFFIC BARRIER TERMINAL, TYPE 2	TRAFFIC BARRIER TERMINAL, TYPE 6	TERMINAL MARKER DIRECT APPLIED	GUARDRAIL REFLECTORS, TYPE A
STATION	LT/RT		(FOOT)	(FOOT)	(FOOT)	(EACH)	(EACH)	(EACH)	(EACH)	(EACH)
IL 111										
527+90	LT	SB				1			1	
528+40	LT	SB	37.5	37.5						3
528+78	LT	SB						1		
631+14	RT	NB						1		
631+52	RT	NB	37.5	37.5						3
631+89	RT	NB				1			1	
541+12	RT	SB				1			1	
541+62	RT	SB	132.8	87.5						3
542+50	RT	SB			12.5					
542+63	RT	SB					1			
644+04	RT	NB				1			1	
644+54	RT	NB	132.8	87.5						3
645+42	RT	NB			12.5					
645+55	RT	NB					1			
I-270										
397+44	RT	EB				1			1	
397+94	RT	EB	208.2	175						
399+68	RT	EB						1		
398+75	RT	WB					1			
399+00	RT	WB	137.5	100						
400+00	RT	WB						1		
397+37	LT	EB				1			1	
397+87	LT	EB	208.2	175						4
399+62	LT	EB						1		
402+51	RT	EB						1		
402+88	RT	EB	162	125						
404+14	RT	EB					1			
402+90	LT	WB						1		
403+27	LT	WB	208.2	175						4
405+02	LT	WB				1			1	
402+83	LT	EB						1		
403+20	LT	EB	137.5	100						3
404+20	LT	EB					1			
402+85	RT	WB						1		
403+23	RT	WB	208.2	175						
404+98	RT	WB				1			1	
TOTALS				1275	25	8	5	9	8	23

PCC SHOULDER SCHEDULE

LOCATION						HMA SURF REM 10" (SQ YD)	PCC SHLDR 10" (SQ YD)	SHLDR RUM STRIP 16" (FOOT)	NOTES
ROADWAY	STATION	OFFSET	TO	STATION	OFFSET				
I-270	372+85.00	28.0' LT		398+75.00	19.0' LT	1536.3	1536.3	2714.0	PRESTAGE
					SUBTOTALS	1536.3	1536.3	2714.0	
					TOTALS	1537	1537	2714	

TRAFFIC CONTROL & PROTECTION SCHEDULE

LOCATION			TRAFFIC CONTROL AND PROTECTION (SPECIAL) (L SUM)
ROADWAY	STATION	STATION	
	ENTIRE PROJECT		1.0
		SUBTOTAL	1.0
		TOTALS	1

TRAFFIC SIGNAL SCHEDULE

LOCATION			TEMPORARY TRAFFIC SIGNAL INSTALLATION (SPECIAL) (EACH)
ROADWAY	STATION	STATION	
IL RTE 157	WB RAMP TERMINAL INTERSECTION		1
		SUBTOTAL	1
		TOTALS	1

PAVEMENT PATCHING SCHEDULE

LOCATION						CL D PATCH T4 8" (SQ YD)	NOTES
ROADWAY	STATION	OFFSET	TO	STATION	OFFSET		
RAMP C4	18+29.00	6' RT		18+58.00	22' LT	88.0	PRESTAGE
RAMP C8	7+68.00	6' RT		8+36.00	22' LT	217.6	PRESTAGE
					SUBTOTALS	305.6	
					TOTALS	306	

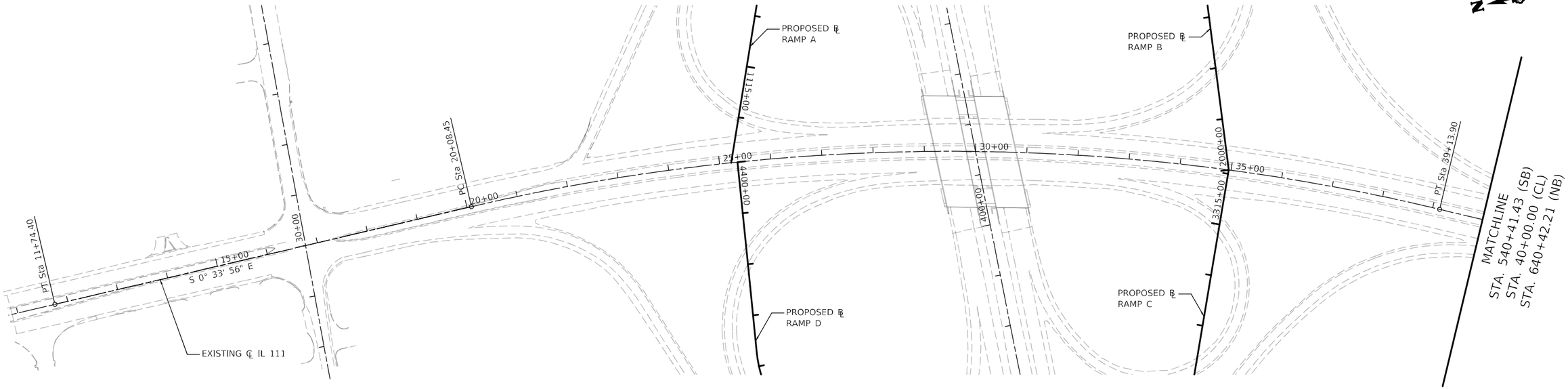

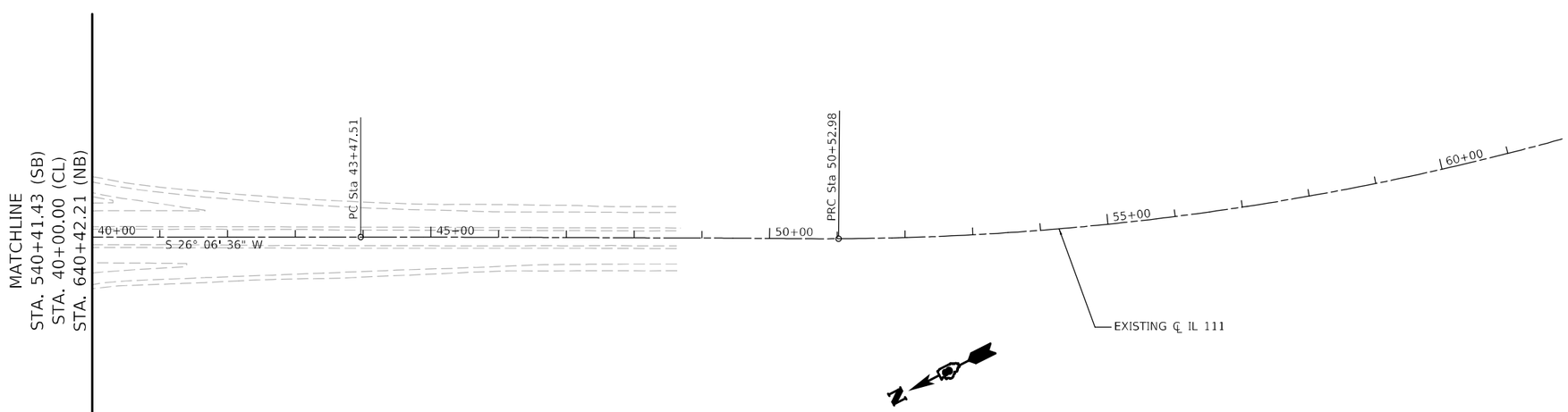

EXIST. CURVE IL111_6
PI STA. = 29+78.77
Δ = 26° 40' 32" (RT)
D = 1° 24' 00"
R = 4,092.66'
T = 970.32'
L = 1,905.45'
E = 113.45'
e = N/A
T.R. = N/A
S.E. RUN = N/A
P.C. STA. = 20+08.45
P.T. STA. = 39+13.90

EXIST. CURVE IL111_9
PI STA. = 47+00.25
Δ = 0° 23' 13" (RT)
D = 0° 03' 17"
R = 104,466.68'
T = 352.74'
L = 705.48'
E = 0.60'
e = N/A
T.R. = N/A
S.E. RUN = N/A
P.C. STA. = 43+47.51
P.R.C. STA. = 50+52.98

EXIST. CURVE IL111_9
PI STA. = 60+46.90
Δ = 27° 14' 38" (LT)
D = 1° 23' 49"
R = 4,101.46'
T = 993.91'
L = 1,950.91'
E = 118.71'
e = N/A
T.R. = N/A
S.E. RUN = N/A
P.R.C. STA. = 50+52.98
P.T. STA. = 70+03.21

100' 0 100' 200'
SCALE: 1" = 100'

MODEL: Sheet
FILE NAME: pw:\\ildot-pw.bentley.com:PWIDOT\Documents\IDOT Offices\District 8\Projects\D87681B\CADData\CADsheets\D80917 sht ATB-EX 1111 001.dgn

USER NAME = Jon.Dintelman	DESIGNED -	REVISED -	STATE OF ILLINOIS DEPARTMENT OF TRANSPORTATION
	DRAWN -	REVISED -	
PLOT SCALE = 200.0000 ' / in.	CHECKED -	REVISED -	
PLOT DATE = 6/5/2024	DATE -	REVISED -	

ALIGNMENT, TIES AND BENCHMARK
F.A.P. 582 (IL 111) EXISTING CENTERLINE DATA

SCALE: 1" = 100' | SHEET X OF XX SHEETS | STA. XX+XX TO STA.

F.A.I. RTE.	SECTION	COUNTY	TOTAL SHEETS	SHEET NO.
270	60-3K-1	MADISON	576	50
		CONTRACT NO. 76818		
		ILLINOIS FED. AID PROJECT		

PROP. CURVE PR111SB_3
PI STA. = 522+13.82
Δ = 17° 22' 53" (RT)
D = 16° 22' 13"
R = 350.00'
T = 53.50'
L = 106.18'
E = 4.07'
e = N.C.
T.R. = N/A
S.E. RUN = N/A
P.C. STA. = 521+60.32
P.R.C. STA. = 522+66.50

PROP. CURVE PR111SB_4
PI STA. = 523+72.92
Δ = 32° 30' 35" (LT)
D = 15° 41' 51"
R = 365.00'
T = 106.42'
L = 207.10'
E = 15.20'
e = N.C.
T.R. = N/A
S.E. RUN = N/A
P.R.C. STA. = 522+66.50
P.T. STA. = 524+73.60

PROP. CURVE PR111SB_7
PI STA. = 527+23.80
Δ = 38° 39' 31" (RT)
D = 16° 22' 13"
R = 350.00'
T = 122.77'
L = 236.15'
E = 20.91'
e = N.C.
T.R. = N/A
S.E. RUN = N/A
P.C. STA. = 526+01.03
P.R.C. STA. = 528+37.18

PROP. CURVE PR111SB_8
PI STA. = 528+68.07
Δ = 9° 40' 32" (LT)
D = 15° 41' 51"
R = 365.00'
T = 30.89'
L = 61.64'
E = 1.30'
e = N.C.
T.R. = N/A
S.E. RUN = N/A
P.R.C. STA. = 528+37.18
P.T. STA. = 528+98.82

PROP. CURVE PR111SB_11
PI STA. = 531+50.21
Δ = 13° 55' 35" (LT)
D = 15° 41' 51"
R = 365.00'
T = 44.58'
L = 88.72'
E = 2.71'
e = N.C.
T.R. = N/A
S.E. RUN = N/A
P.C. STA. = 531+05.63
P.R.C. STA. = 531+94.35

PROP. CURVE PR111SB_12
PI STA. = 533+33.60
Δ = 43° 23' 28" (RT)
D = 16° 22' 13"
R = 350.00'
T = 139.25'
L = 265.06'
E = 26.68'
e = N.C.
T.R. = N/A
S.E. RUN = N/A
P.R.C. STA. = 531+94.35
P.T. STA. = 534+59.41

PROP. CURVE PR111SB_15
PI STA. = 536+95.16
Δ = 32° 31' 42" (LT)
D = 16° 22' 13"
R = 350.00'
T = 102.11'
L = 198.71'
E = 14.59'
e = N.C.
T.R. = N/A
S.E. RUN = N/A
P.C. STA. = 535+93.05
P.R.C. STA. = 537+91.76

PROP. CURVE PR111SB_16
PI STA. = 538+40.59
Δ = 15° 53' 06" (RT)
D = 16° 22' 13"
R = 350.00'
T = 48.83'
L = 97.04'
E = 3.39'
e = N.C.
T.R. = N/A
S.E. RUN = N/A
P.R.C. STA. = 537+91.76
P.T. STA. = 538+88.79

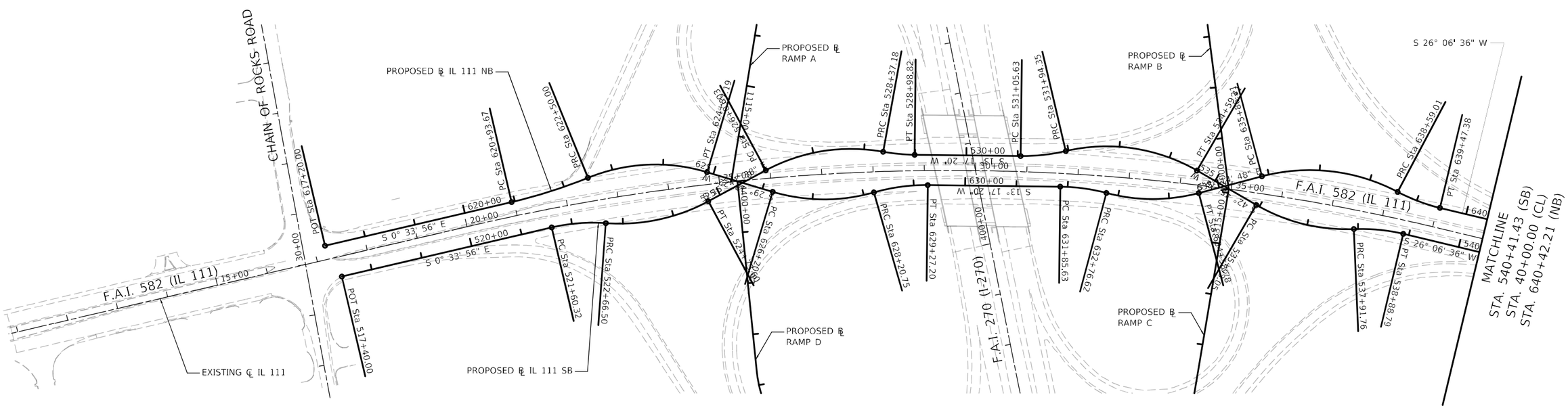

PROP. CURVE PR111NB_3
PI STA. = 621+71.99
Δ = 8° 57' 26" (LT)
D = 5° 43' 46"
R = 1,000.00'
T = 78.33'
L = 156.33'
E = 3.06'
e = N.C.
T.R. = N/A
S.E. RUN = N/A
P.C. STA. = 620+93.67
P.R.C. STA. = 622+50.00

PROP. CURVE PR111NB_4
PI STA. = 623+73.35
Δ = 38° 49' 44" (RT)
D = 16° 22' 13"
R = 350.00'
T = 123.35'
L = 237.19'
E = 21.10'
e = N.C.
T.R. = N/A
S.E. RUN = N/A
P.R.C. STA. = 622+50.00
P.T. STA. = 624+87.19

PROP. CURVE PR111NB_7
PI STA. = 627+23.60
Δ = 32° 43' 38" (LT)
D = 16° 22' 13"
R = 350.00'
T = 102.77'
L = 199.92'
E = 14.78'
e = N.C.
T.R. = N/A
S.E. RUN = N/A
P.C. STA. = 626+20.83
P.R.C. STA. = 628+20.75

PROP. CURVE PR111NB_8
PI STA. = 628+74.36
Δ = 16° 42' 36" (RT)
D = 15° 41' 51"
R = 365.00'
T = 53.61'
L = 106.45'
E = 3.92'
e = N.C.
T.R. = N/A
S.E. RUN = N/A
P.R.C. STA. = 628+20.75
P.T. STA. = 629+27.20

PROP. CURVE PR111NB_11
PI STA. = 632+31.36
Δ = 14° 17' 02" (RT)
D = 15° 41' 51"
R = 365.00'
T = 45.73'
L = 90.99'
E = 2.85'
e = N.C.
T.R. = N/A
S.E. RUN = N/A
P.C. STA. = 631+85.63
P.R.C. STA. = 632+76.62

PROP. CURVE PR111NB_12
PI STA. = 633+69.82
Δ = 29° 49' 09" (LT)
D = 16° 22' 13"
R = 350.00'
T = 93.19'
L = 182.16'
E = 12.19'
e = N.C.
T.R. = N/A
S.E. RUN = N/A
P.R.C. STA. = 632+76.62
P.T. STA. = 634+58.78

PROP. CURVE PR111NB_15
PI STA. = 637+29.33
Δ = 42° 49' 24" (RT)
D = 15° 41' 51"
R = 365.00'
T = 143.13'
L = 272.80'
E = 27.06'
e = N.C.
T.R. = N/A
S.E. RUN = N/A
P.C. STA. = 635+86.21
P.R.C. STA. = 638+59.01

PROP. CURVE PR111NB_16
PI STA. = 639+03.43
Δ = 14° 28' 00" (LT)
D = 16° 22' 13"
R = 350.00'
T = 44.42'
L = 88.37'
E = 2.81'
e = N.C.
T.R. = N/A
S.E. RUN = N/A
P.R.C. STA. = 638+59.01
P.T. STA. = 639+47.38

MODEL: Sheet
FILE NAME: pw:\\ildot-pw.bentley.com:PWIDOT\Documents\IDOT Offices\District 8\Projects\D876818\CADData\CAD\Sheet\D880917 Sht ATB-PR IL111 002.dgn

USER NAME = Jon.Dintelman	DESIGNED -	REVISED -	
	DRAWN -	REVISED -	
PLOT SCALE = 200.0000 ' / in.	CHECKED -	REVISED -	
PLOT DATE = 6/5/2024	DATE -	REVISED -	

STATE OF ILLINOIS
DEPARTMENT OF TRANSPORTATION

ALIGNMENT, TIES AND BENCHMARK
F.A.P. 582 (IL 111) SB & NB CENTERLINE DATA

SCALE: 1" = 100' | SHEET X OF XX SHEETS | STA. XX+XX TO STA. XX+XX

F.A.I. RTE.	SECTION	COUNTY	TOTAL SHEETS	SHEET NO.
270	60-3K-1	MADISON	576	51
		CONTRACT NO. 76818		
	ILLINOIS	FED. AID PROJECT		

PROP. CURVE PR111S_21
PI STA. = 546+15.13
Δ = 0° 14' 53" (RT)
D = 0° 03' 17"
R = 104,439.68'
T = 226.19'
L = 452.37'
E = 0.24'
e = N.C.
T.R. = N/A
S.E. RUN = N/A
P.C. STA. = 543+88.94
P.T. STA. = 548+41.32

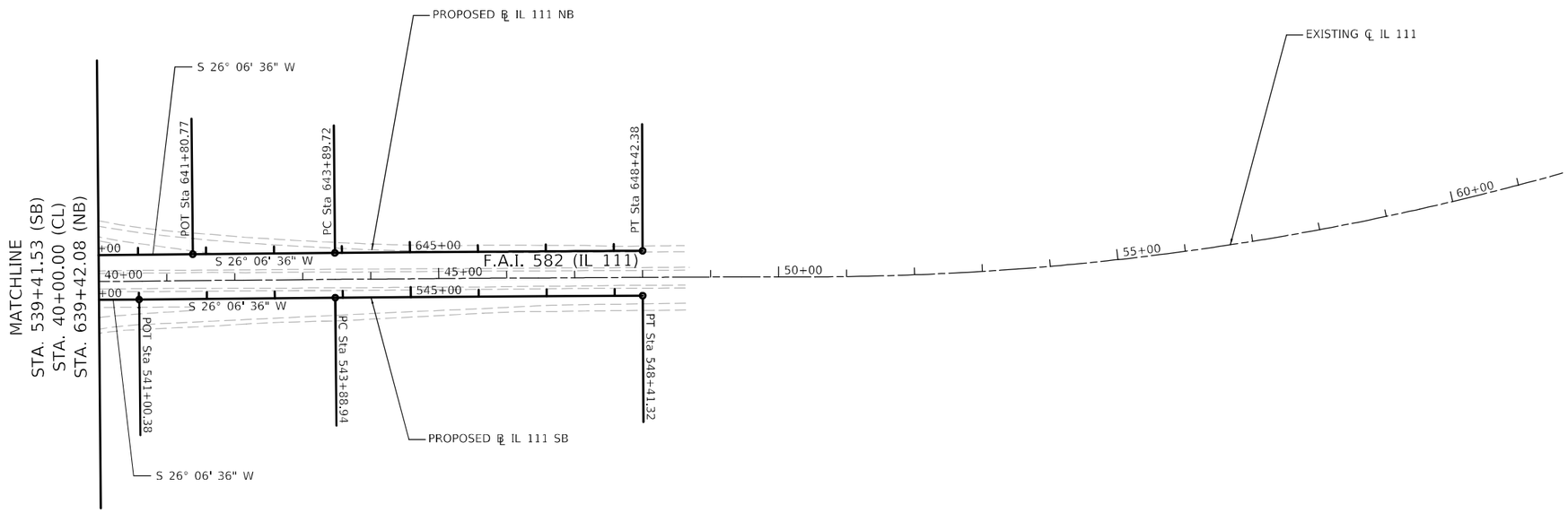

PROP. CURVE PR111N_21
PI STA. = 646+16.05
Δ = 0° 14' 53" (RT)
D = 0° 03' 17"
R = 104,505.68'
T = 226.33'
L = 452.66'
E = 0.25'
e = N.C.
T.R. = N/A
S.E. RUN = N/A
P.C. STA. = 643+89.72
P.T. STA. = 648+42.38

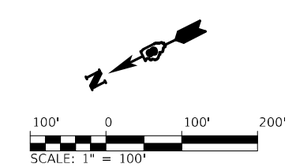

MODEL: Sheet
FILE NAME: pw:\\ildot-pw.bentley.com:PWIDOT\Documents\IDOT Offices\District 8\Projects\087638\CADData\CADsheets\D880917 sht ATB-Rt 111 003.dgn

USER NAME = Jon.Dintelman	DESIGNED -	REVISED -	
	DRAWN -	REVISED -	
PLOT SCALE = 200.0000 ' / in.	CHECKED -	REVISED -	
PLOT DATE = 6/5/2024	DATE -	REVISED -	

STATE OF ILLINOIS
DEPARTMENT OF TRANSPORTATION

ALIGNMENT, TIES AND BENCHMARK
F.A.P. 582 (IL 111) SB & NB CENTERLINE DATA

SCALE: 1" = 100' | SHEET X OF XX SHEETS | STA. 40+00 TO STA. 64+00

F.A.I. RTE.	SECTION	COUNTY	TOTAL SHEETS	SHEET NO.
270	60-3K-1	MADISON	576	52
		CONTRACT NO. 76818		
		ILLINOIS	FED. AID PROJECT	

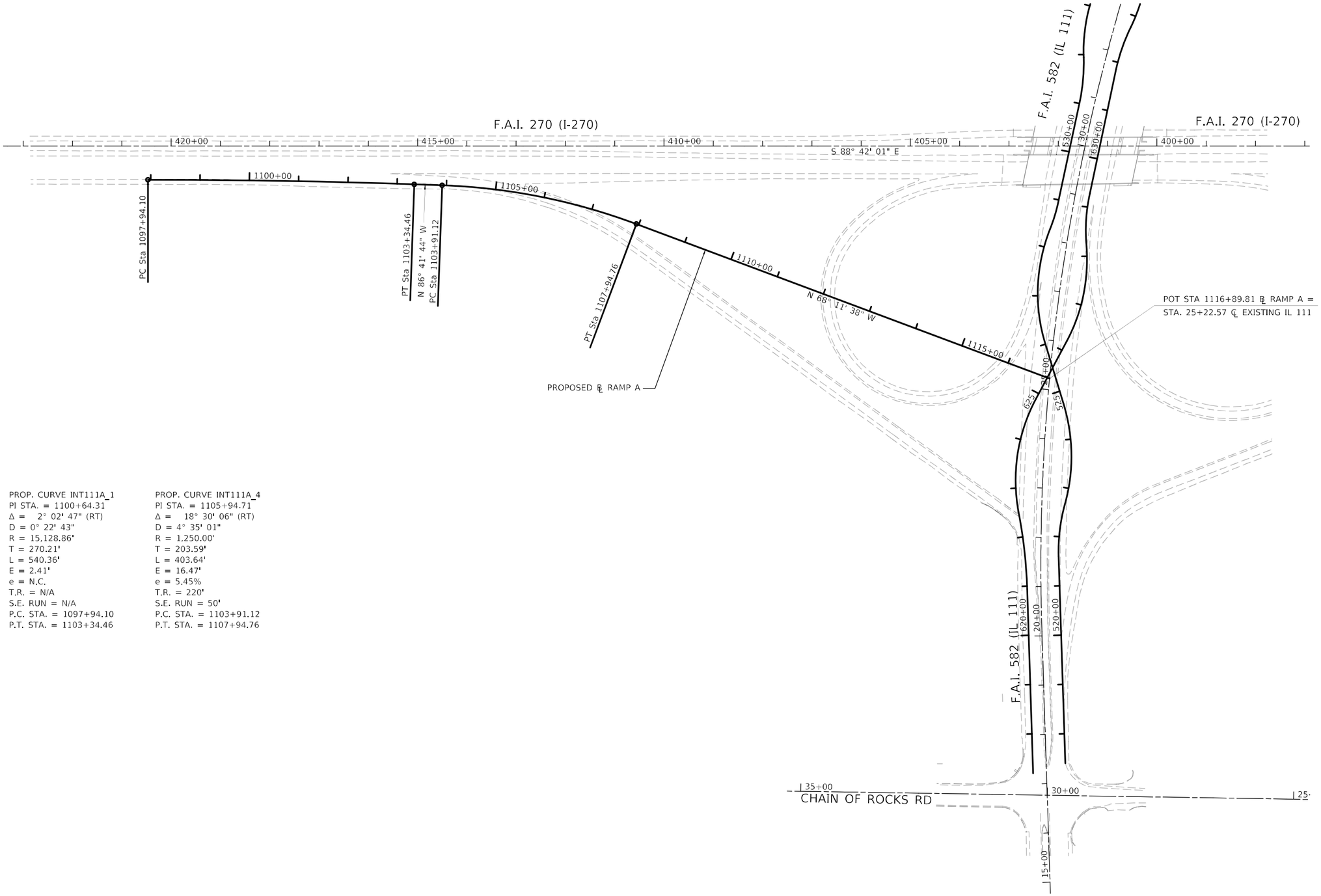

PROP. CURVE INT111A_1
PI STA. = 1100+64.31
Δ = 2° 02' 47" (RT)
D = 0° 22' 43"
R = 15,128.86'
T = 270.21'
L = 540.36'
E = 2.41'
e = N.C.
T.R. = N/A
S.E. RUN = N/A
P.C. STA. = 1097+94.10
P.T. STA. = 1103+34.46

PROP. CURVE INT111A_4
PI STA. = 1105+94.71
Δ = 18° 30' 06" (RT)
D = 4° 35' 01"
R = 1,250.00'
T = 203.59'
L = 403.64'
E = 16.47'
e = 5.45%
T.R. = 220'
S.E. RUN = 50'
P.C. STA. = 1103+91.12
P.T. STA. = 1107+94.76

MODEL: Sheet
FILE NAME: pw:\\ildot-pw.bentley.com:PWIDOT\Documents\IDOT Offices\District 8\Projects\D87681 8\CADData\CADsheets\D880917 sht ATB-RampA 004.dgn

USER NAME = Jon.Dintelman	DESIGNED -	REVISED -	
	DRAWN -	REVISED -	
PLOT SCALE = 200.0000 ' / in.	CHECKED -	REVISED -	
PLOT DATE = 6/5/2024	DATE -	REVISED -	

STATE OF ILLINOIS
DEPARTMENT OF TRANSPORTATION

ALIGNMENT, TIES AND BENCHMARK
RAMP A BASELINE DATA

SCALE: 1" = 100' | SHEET X OF XX SHEETS | STA. 1097+94.10 TO STA. 1116+89.81

F.A.I. RTE.	SECTION	COUNTY	TOTAL SHEETS	SHEET NO.
270	60-3K-1	MADISON	576	53
		CONTRACT NO. 76818		
		ILLINOIS FED. AID PROJECT		

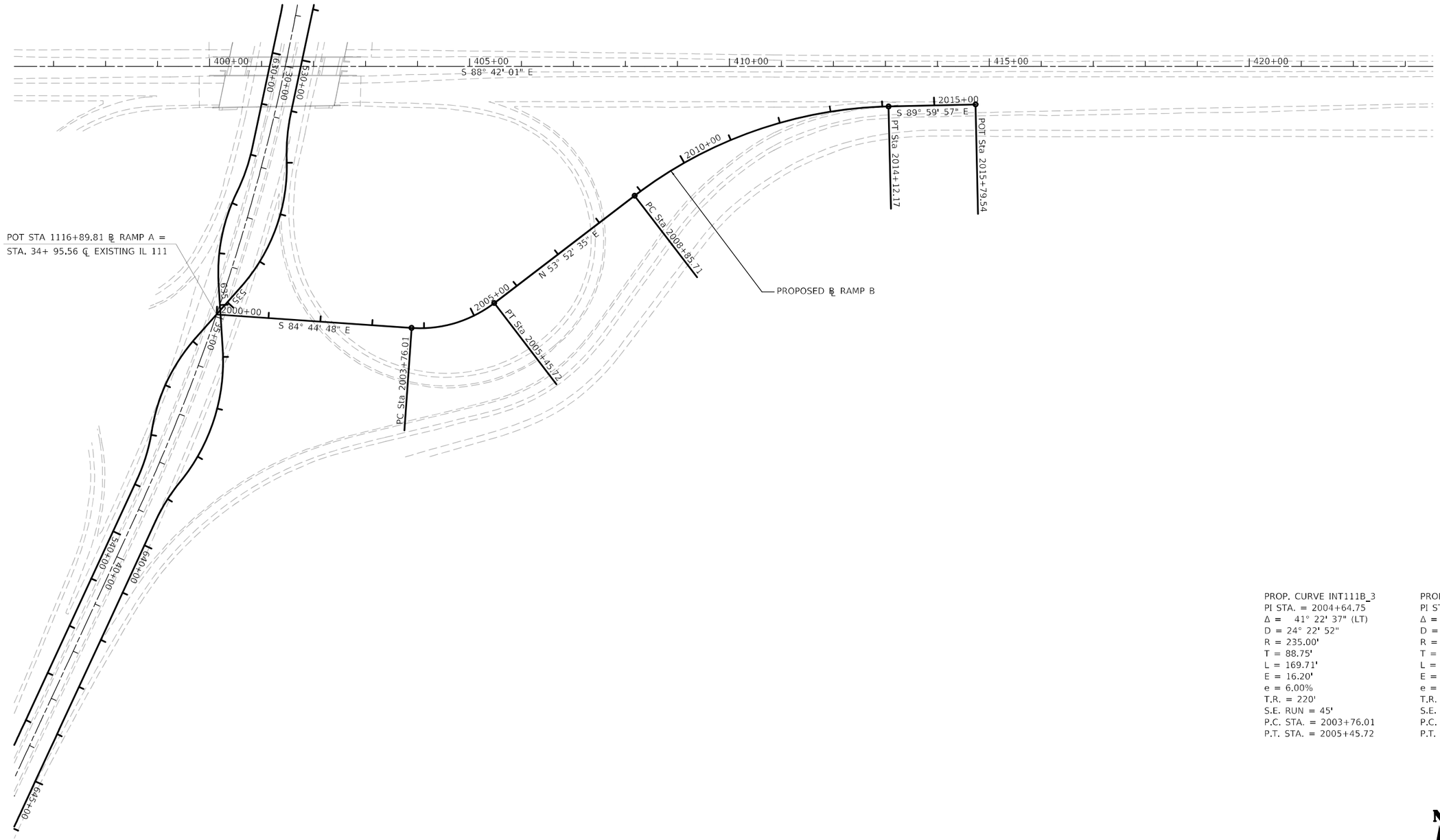

PROP. CURVE INT111B_3
PI STA. = 2004+64.75
Δ = 41° 22' 37" (LT)
D = 24° 22' 52"
R = 235.00'
T = 88.75'
L = 169.71'
E = 16.20'
e = 6.00%
T.R. = 220'
S.E. RUN = 45'
P.C. STA. = 2003+76.01
P.T. STA. = 2005+45.72

PROP. CURVE INT111B_6
PI STA. = 2011+58.02
Δ = 36° 07' 28" (RT)
D = 6° 51' 42"
R = 835.00'
T = 272.31'
L = 526.46'
E = 43.28'
e = 6.00%
T.R. = 290'
S.E. RUN = 60'
P.C. STA. = 2008+85.71
P.T. STA. = 2014+12.17

N

100' 0 100' 200'
SCALE: 1" = 100'

MODEL: Sheet
FILE NAME: pw:\\ildot-pw.bentley.com:PWIDOT\Documents\IDOT Offices\District 8\Projects\D876318\CADData\CADsheets\D880097 sht ATB-RampB 005.dgn

USER NAME = Jon.Dintelman	DESIGNED -	REVISED -	
	DRAWN -	REVISED -	
PLOT SCALE = 200.0000 ' / in.	CHECKED -	REVISED -	
PLOT DATE = 6/5/2024	DATE -	REVISED -	

STATE OF ILLINOIS
DEPARTMENT OF TRANSPORTATION

ALIGNMENT, TIES AND BENCHMARK
RAMP B BASELINE DATA

SCALE: 1" = 100' | SHEET X OF XX SHEETS | STA. 2000+00 TO STA. 2015+79.54

F.A.I. RTE.	SECTION	COUNTY	TOTAL SHEETS	SHEET NO.
270	60-3K-1	MADISON	576	54
		CONTRACT NO. 76818		
	ILLINOIS	FED. AID PROJECT		

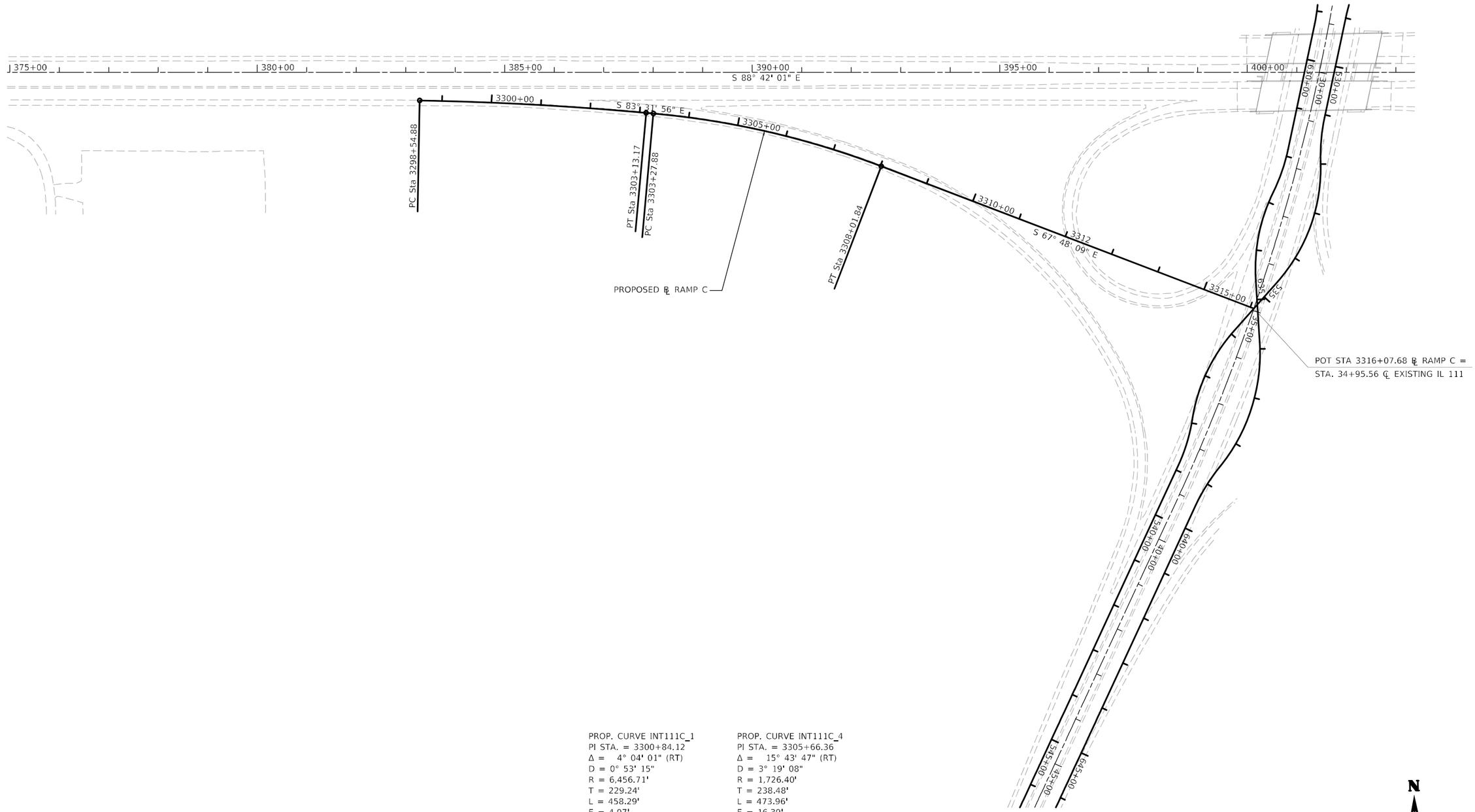

PROP. CURVE INT111C_1
PI STA. = 3300+84.12
Δ = 4° 04' 01" (RT)
D = 0° 53' 15"
R = 6,456.71'
T = 229.24'
L = 458.29'
E = 4.07'
e = N.C.
T.R. = N/A
S.E. RUN = N/A
P.C. STA. = 3298+54.88
P.T. STA. = 3303+13.17

PROP. CURVE INT111C_4
PI STA. = 3305+66.36
Δ = 15° 43' 47" (RT)
D = 3° 19' 08"
R = 1,726.40'
T = 238.48'
L = 473.96'
E = 16.39'
e = 4.68%
T.R. = 190'
S.E. RUN = 55'
P.C. STA. = 3303+27.88
P.T. STA. = 3308+01.84

MODEL: Sheet
FILE NAME: pw:\\ildot-pw.bentley.com:PWIDOT\Documents\IDOT Offices\District 8\Projects\D876818\CADData\CADsheets\D880917 sht ATB-RampC 006.dgn

USER NAME = Jon.Dintelman	DESIGNED -	REVISED -	
	DRAWN -	REVISED -	
PLOT SCALE = 200.0000 ' / in.	CHECKED -	REVISED -	
PLOT DATE = 6/5/2024	DATE -	REVISED -	

STATE OF ILLINOIS
DEPARTMENT OF TRANSPORTATION

ALIGNMENT, TIES AND BENCHMARK
RAMP C BASELINE DATA

SCALE: 1" = 100' | SHEET X OF XX SHEETS | STA. 2000+00 TO STA. 2015+79.54

F.A.I. RTE.	SECTION	COUNTY	TOTAL SHEETS	SHEET NO.
270	60-3K-1	MADISON	576	55
		CONTRACT NO. 76818		
	ILLINOIS	FED. AID PROJECT		

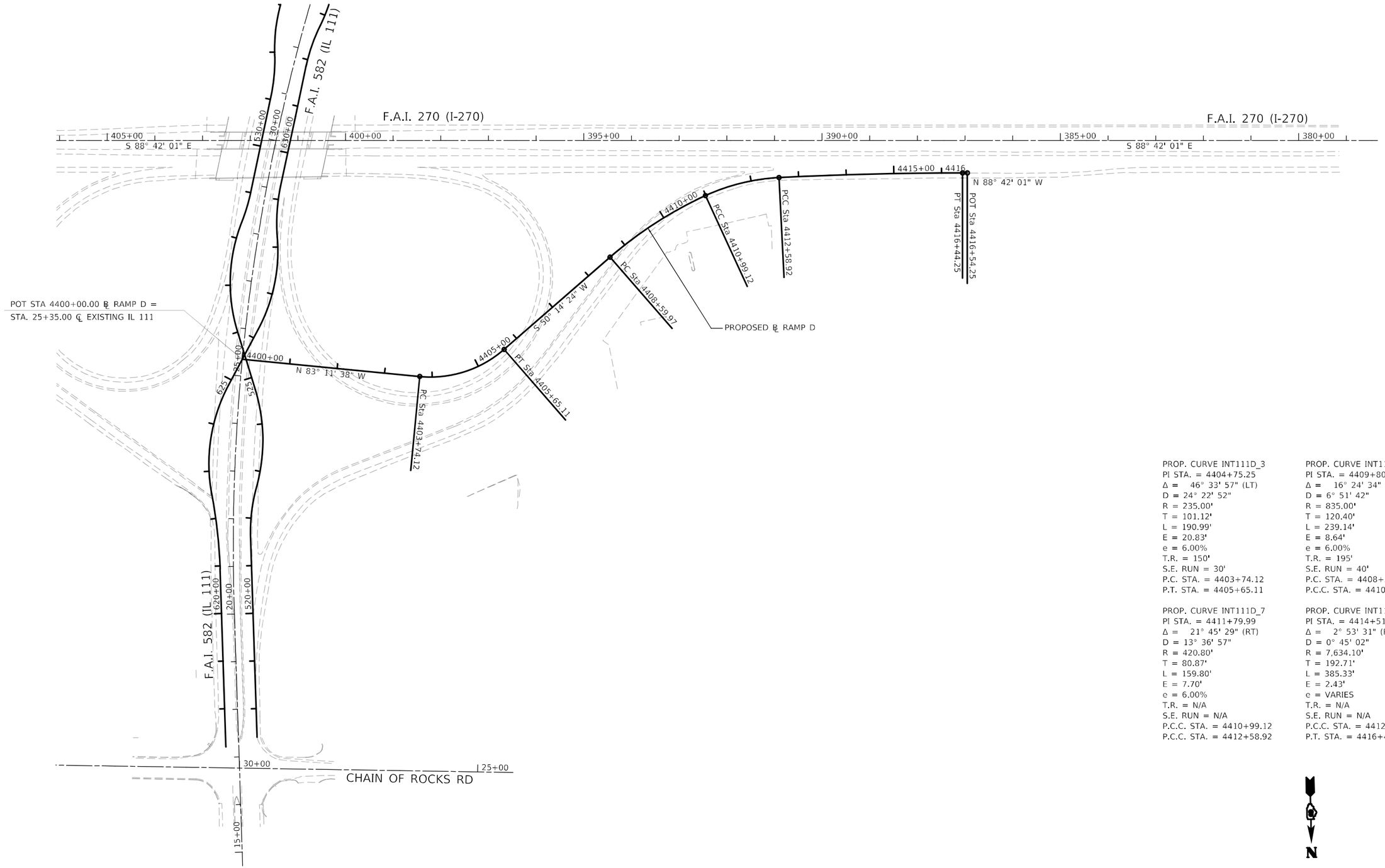

PROP. CURVE INT111D_3
PI STA. = 4404+75.25
Δ = 46° 33' 57" (LT)
D = 24° 22' 52"
R = 235.00'
T = 101.12'
L = 190.99'
E = 20.83'
e = 6.00%
T.R. = 150'
S.E. RUN = 30'
P.C. STA. = 4403+74.12
P.T. STA. = 4405+65.11

PROP. CURVE INT111D_6
PI STA. = 4409+80.37
Δ = 16° 24' 34" (RT)
D = 6° 51' 42"
R = 835.00'
T = 120.40'
L = 239.14'
E = 8.64'
e = 6.00%
T.R. = 195'
S.E. RUN = 40'
P.C. STA. = 4408+59.97
P.C.C. STA. = 4410+99.12

PROP. CURVE INT111D_7
PI STA. = 4411+79.99
Δ = 21° 45' 29" (RT)
D = 13° 36' 57"
R = 420.80'
T = 80.87'
L = 159.80'
E = 7.70'
e = 6.00%
T.R. = N/A
S.E. RUN = N/A
P.C.C. STA. = 4410+99.12
P.C.C. STA. = 4412+58.92

PROP. CURVE INT111D_8
PI STA. = 4414+51.62
Δ = 2° 53' 31" (RT)
D = 0° 45' 02"
R = 7,634.10'
T = 192.71'
L = 385.33'
E = 2.43'
e = VARIES
T.R. = N/A
S.E. RUN = N/A
P.C.C. STA. = 4412+58.92
P.T. STA. = 4416+44.25

MODEL: Sheet
FILE NAME: pw:\\ildot-pw.bentley.com:PWIDOT\Documents\IDOT Offices\District 8\Projects\D876818\CADData\CAD-Sheets\D880917 sht ATB-RampD 007.dgn

USER NAME = Jon.Dintelman	DESIGNED -	REVISED -	
	DRAWN -	REVISED -	
PLOT SCALE = 200.0000 ' / in.	CHECKED -	REVISED -	
PLOT DATE = 6/5/2024	DATE -	REVISED -	

STATE OF ILLINOIS
DEPARTMENT OF TRANSPORTATION

ALIGNMENT, TIES AND BENCHMARK
RAMP D BASELINE DATA

SCALE: 1" = 100' | SHEET X OF XX SHEETS | STA. 4400+00 TO STA. 4416+54.25

F.A.I. RTE.	SECTION	COUNTY	TOTAL SHEETS	SHEET NO.
270	60-3K-1	MADISON	576	56
		CONTRACT NO. 76818		
		ILLINOIS	FED. AID PROJECT	

PROP. CURVE PR111DR_1
PI STA. = 0+25.03
Δ = 7° 15' 09" (LT)
D = 14° 30' 19"
R = 395.00'
T = 25.03'
L = 50.00'
E = 0.79'
e = N/A
T.R. = N/A
S.E. RUN = N/A
P.C. STA. = 0+00.00
P.R.C. STA. = 0+50.00

PROP. CURVE PR111DR_2
PI STA. = 1+01.96
Δ = 60° 00' 00" (RT)
D = 63° 39' 43"
R = 90.00'
T = 51.96'
L = 94.25'
E = 13.92'
e = N/A
T.R. = N/A
S.E. RUN = N/A
P.R.C. STA. = 0+50.00
P.C.C. STA. = 1+44.25

PROP. CURVE PR111DR_3
PI STA. = 1+57.56
Δ = 18° 53' 24" (RT)
D = 71° 37' 11"
R = 80.00'
T = 13.31'
L = 26.38'
E = 1.10'
e = N/A
T.R. = N/A
S.E. RUN = N/A
P.C.C. STA. = 1+44.25
P.C.C. STA. = 1+70.62

PROP. CURVE PR111DR_4
PI STA. = 2+13.14
Δ = 21° 24' 12" (RT)
D = 25° 27' 53"
R = 225.00'
T = 42.52'
L = 84.05'
E = 3.98'
e = N/A
T.R. = N/A
S.E. RUN = N/A
P.C.C. STA. = 1+70.62
P.T. STA. = 2+54.67

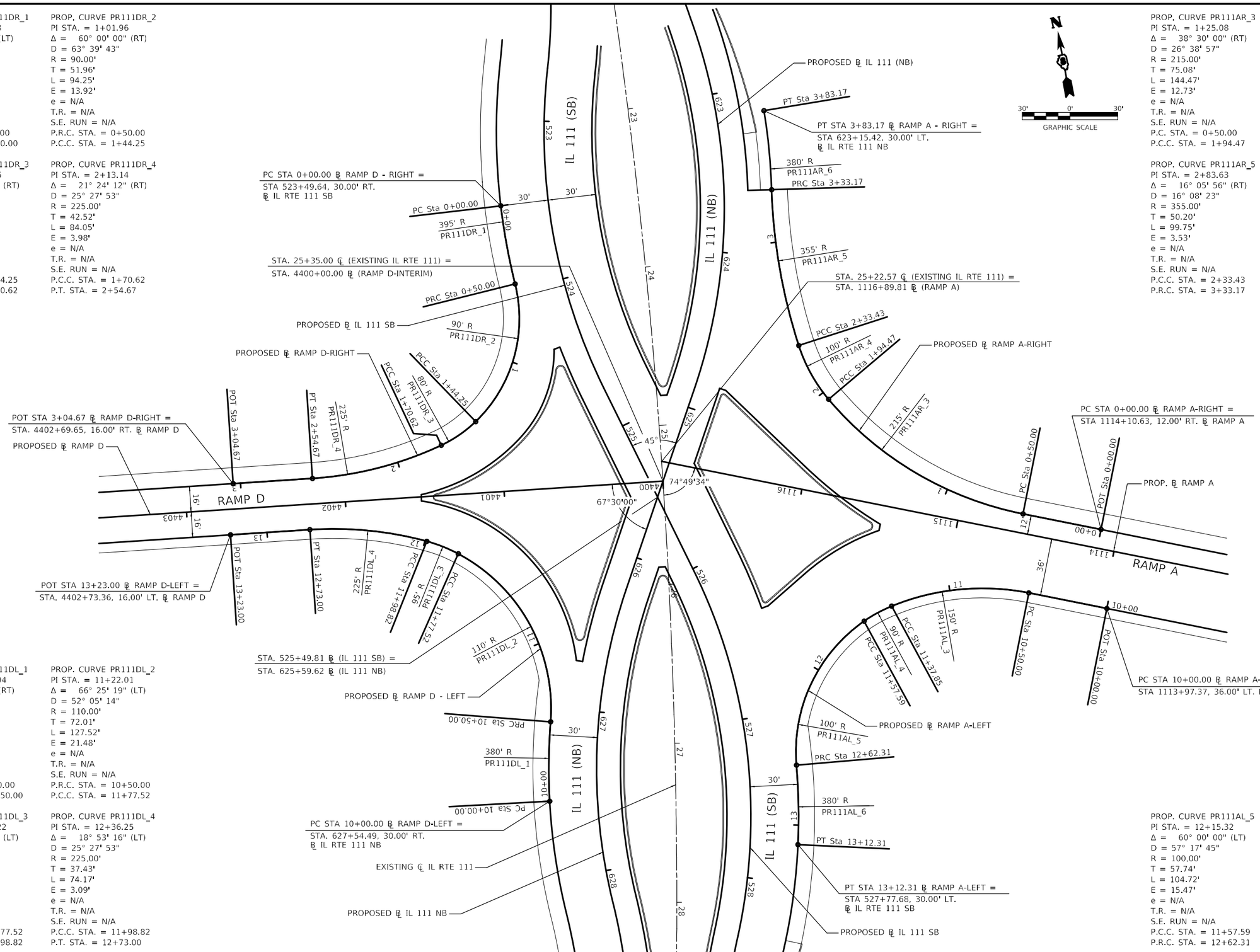

PROP. CURVE PR111AR_3
PI STA. = 1+25.08
Δ = 38° 30' 00" (RT)
D = 26° 38' 57"
R = 215.00'
T = 75.08'
L = 144.47'
E = 12.73'
e = N/A
T.R. = N/A
S.E. RUN = N/A
P.C. STA. = 0+50.00
P.C.C. STA. = 1+94.47

PROP. CURVE PR111AR_4
PI STA. = 2+14.20
Δ = 22° 19' 12" (RT)
D = 57° 17' 45"
R = 100.00'
T = 19.73'
L = 38.96'
E = 1.93'
e = N/A
T.R. = N/A
S.E. RUN = N/A
P.C.C. STA. = 1+94.47
P.C.C. STA. = 2+33.43

PROP. CURVE PR111AR_5
PI STA. = 2+83.63
Δ = 16° 05' 56" (RT)
D = 16° 08' 23"
R = 355.00'
T = 50.20'
L = 99.75'
E = 3.53'
e = N/A
T.R. = N/A
S.E. RUN = N/A
P.C.C. STA. = 2+33.43
P.R.C. STA. = 3+33.17

PROP. CURVE PR111AR_6
PI STA. = 3+58.21
Δ = 7° 32' 20" (LT)
D = 15° 04' 40"
R = 380.00'
T = 25.04'
L = 50.00'
E = 0.82'
e = N/A
T.R. = N/A
S.E. RUN = N/A
P.R.C. STA. = 3+33.17
P.T. STA. = 3+83.17

PROP. CURVE PR111AL_3
PI STA. = 10+95.23
Δ = 33° 33' 26" (LT)
D = 38° 11' 50"
R = 150.00'
T = 45.23'
L = 87.85'
E = 6.67'
e = N/A
T.R. = N/A
S.E. RUN = N/A
P.C. STA. = 10+50.00
P.C.C. STA. = 11+37.85

PROP. CURVE PR111AL_4
PI STA. = 11+47.76
Δ = 12° 33' 50" (LT)
D = 63° 39' 43"
R = 90.00'
T = 9.91'
L = 19.74'
E = 0.54'
e = N/A
T.R. = N/A
S.E. RUN = N/A
P.C.C. STA. = 11+37.85
P.C.C. STA. = 11+57.59

PROP. CURVE PR111DL_1
PI STA. = 10+25.04
Δ = 7° 32' 20" (RT)
D = 15° 04' 40"
R = 380.00'
T = 25.04'
L = 50.00'
E = 0.82'
e = N/A
T.R. = N/A
S.E. RUN = N/A
P.C. STA. = 10+00.00
P.R.C. STA. = 10+50.00

PROP. CURVE PR111DL_2
PI STA. = 11+22.01
Δ = 66° 25' 19" (LT)
D = 52° 05' 14"
R = 110.00'
T = 72.01'
L = 127.52'
E = 21.48'
e = N/A
T.R. = N/A
S.E. RUN = N/A
P.R.C. STA. = 10+50.00
P.C.C. STA. = 11+77.52

PROP. CURVE PR111DL_3
PI STA. = 11+88.22
Δ = 12° 50' 55" (LT)
D = 60° 18' 41"
R = 95.00'
T = 10.70'
L = 21.30'
E = 0.60'
e = N/A
T.R. = N/A
S.E. RUN = N/A
P.C.C. STA. = 11+77.52
P.C.C. STA. = 11+98.82

PROP. CURVE PR111DL_4
PI STA. = 12+36.25
Δ = 18° 53' 16" (LT)
D = 25° 27' 53"
R = 225.00'
T = 37.43'
L = 74.17'
E = 3.09'
e = N/A
T.R. = N/A
S.E. RUN = N/A
P.C.C. STA. = 11+98.82
P.T. STA. = 12+73.00

PROP. CURVE PR111AL_5
PI STA. = 12+15.32
Δ = 60° 00' 00" (LT)
D = 57° 17' 45"
R = 100.00'
T = 57.74'
L = 104.72'
E = 15.47'
e = N/A
T.R. = N/A
S.E. RUN = N/A
P.C.C. STA. = 11+57.59
P.R.C. STA. = 12+62.31

PROP. CURVE PR111AL_6
PI STA. = 12+87.34
Δ = 7° 32' 20" (RT)
D = 15° 04' 40"
R = 380.00'
T = 25.04'
L = 50.00'
E = 0.82'
e = N/A
T.R. = N/A
S.E. RUN = N/A
P.R.C. STA. = 12+62.31
P.T. STA. = 13+12.31

MODEL: Detail Sheet
FILE NAME: pw://ildot-pw.bentley.com:PWIDOT\Documents\IDOT Offices\District 8\Projects\D876818\CADData\CADsheets\D800917-sht ATB-RampsA-D Details-008.dgn

USER NAME = Jon.Dintelman	DESIGNED -	REVISED -	
	DRAWN -	REVISED -	
PLOT SCALE = 60.0000 ' / in.	CHECKED -	REVISED -	
PLOT DATE = 6/5/2024	DATE -	REVISED -	

STATE OF ILLINOIS
DEPARTMENT OF TRANSPORTATION

ALIGNMENT, TIES AND BENCHMARK
RAMP A & D – RIGHT AND LEFT TURNING ALIGNMENTS

SCALE: 1" = 30' | SHEET X OF XX SHEETS | STA. XXXX+XX TO STA. XXXX+XX

F.A.I. RTE.	SECTION	COUNTY	TOTAL SHEETS	SHEET NO.
270	60-3K-1	MADISON	576	57
		CONTRACT NO. 76818		
		ILLINOIS	FED. AID PROJECT	

PROP. CURVE PR111CL_3
PI STA. = 10+89.48
Δ = 22° 19' 54" (LT)
D = 28° 38' 52"
R = 200.00'
T = 39.48'
L = 77.95'
E = 3.86'
e = N/A
T.R. = N/A
S.E. RUN = N/A
P.C. STA. = 10+50.00
P.C.C. STA. = 11+27.95

PROP. CURVE PR111CL_4
PI STA. = 11+67.34
Δ = 36° 20' 32" (LT)
D = 47° 44' 47"
R = 120.00'
T = 39.39'
L = 76.11'
E = 6.30'
e = N/A
T.R. = N/A
S.E. RUN = N/A
P.C.C. STA. = 11+27.95
P.C.C. STA. = 12+04.07

PROP. CURVE PR111CL_5
PI STA. = 12+45.73
Δ = 36° 52' 12" (LT)
D = 45° 50' 12"
R = 125.00'
T = 41.67'
L = 80.44'
E = 6.76'
e = N/A
T.R. = N/A
S.E. RUN = N/A
P.C.C. STA. = 12+04.07
P.R.C. STA. = 12+84.50

PROP. CURVE PR111CL_6
PI STA. = 13+09.54
Δ = 7° 32' 20" (RT)
D = 15° 04' 40"
R = 380.00'
T = 25.04'
L = 50.00'
E = 0.82'
e = N/A
T.R. = N/A
S.E. RUN = N/A
P.R.C. STA. = 12+84.50
P.T. STA. = 13+34.50

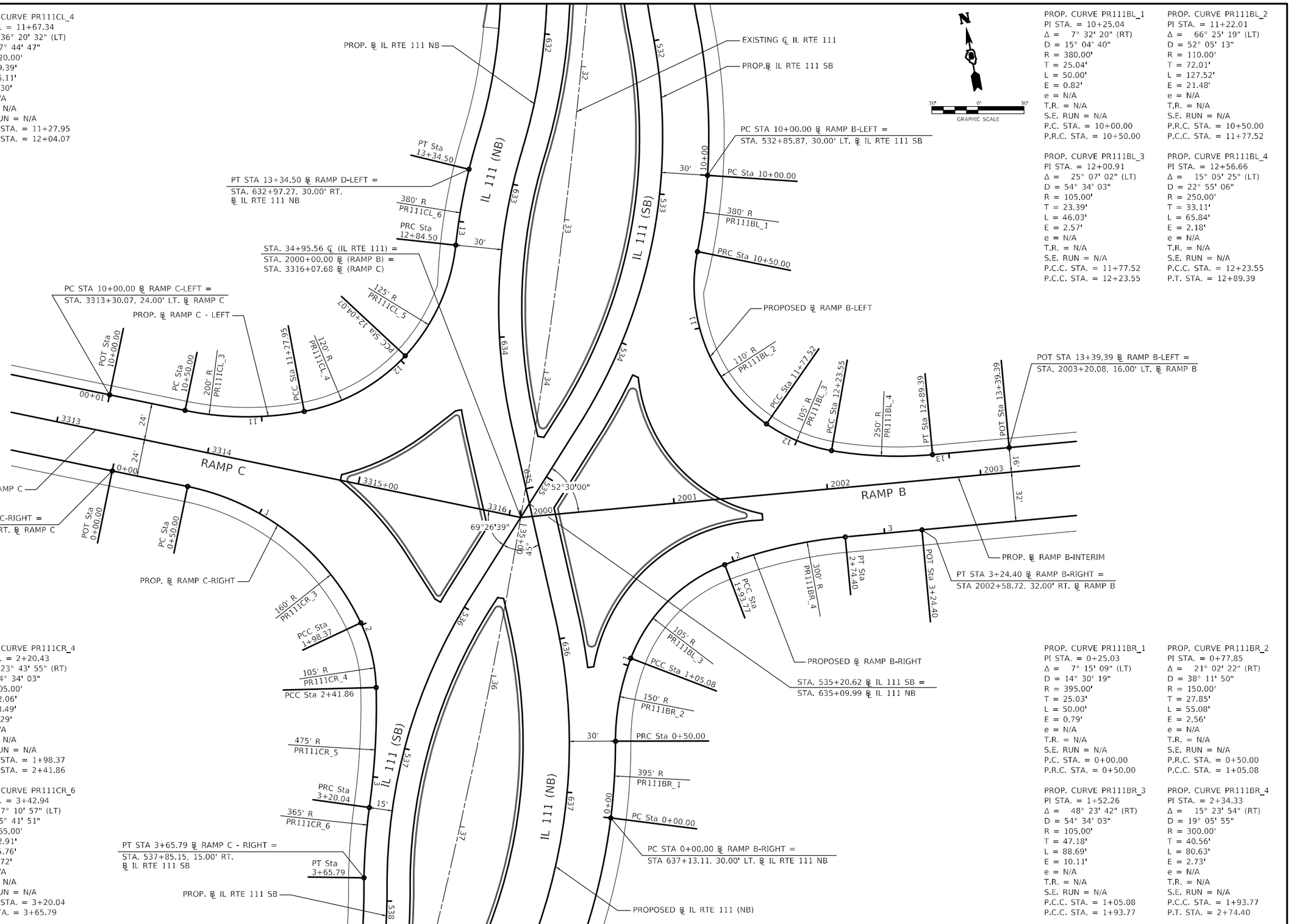

PROP. CURVE PR111BL_1
PI STA. = 10+25.04
Δ = 7° 32' 20" (RT)
D = 15° 04' 40"
R = 380.00'
T = 25.04'
L = 50.00'
E = 0.82'
e = N/A
T.R. = N/A
S.E. RUN = N/A
P.C. STA. = 10+00.00
P.R.C. STA. = 10+50.00

PROP. CURVE PR111BL_2
PI STA. = 11+22.01
Δ = 66° 25' 19" (LT)
D = 52° 05' 13"
R = 110.00'
T = 72.01'
L = 127.52'
E = 21.48'
e = N/A
T.R. = N/A
S.E. RUN = N/A
P.R.C. STA. = 10+50.00
P.C.C. STA. = 11+77.52

PROP. CURVE PR111BL_3
PI STA. = 12+00.91
Δ = 25° 07' 02" (LT)
D = 54° 34' 03"
R = 105.00'
T = 23.39'
L = 46.03'
E = 2.57'
e = N/A
T.R. = N/A
S.E. RUN = N/A
P.C.C. STA. = 11+77.52
P.C.C. STA. = 12+23.55

PROP. CURVE PR111BL_4
PI STA. = 12+56.66
Δ = 15° 05' 25" (LT)
D = 22° 55' 06"
R = 250.00'
T = 33.11'
L = 65.84'
E = 2.18'
e = N/A
T.R. = N/A
S.E. RUN = N/A
P.C.C. STA. = 12+23.55
P.T. STA. = 12+89.39

PROP. CURVE PR111CR_3
PI STA. = 1+30.00
Δ = 53° 07' 48" (RT)
D = 35° 48' 36"
R = 160.00'
T = 80.00'
L = 148.37'
E = 18.89'
e = N/A
T.R. = N/A
S.E. RUN = N/A
P.C. STA. = 0+50.00
P.C.C. STA. = 1+98.37

PROP. CURVE PR111CR_4
PI STA. = 2+20.43
Δ = 23° 43' 55" (RT)
D = 54° 34' 03"
R = 105.00'
T = 22.06'
L = 43.49'
E = 2.29'
e = N/A
T.R. = N/A
S.E. RUN = N/A
P.C.C. STA. = 1+98.37
P.C.C. STA. = 2+41.86

PROP. CURVE PR111CR_5
PI STA. = 2+81.04
Δ = 9° 25' 48" (RT)
D = 12° 03' 44"
R = 475.00'
T = 39.18'
L = 78.18'
E = 1.61'
e = N/A
T.R. = N/A
S.E. RUN = N/A
P.C.C. STA. = 2+41.86
P.R.C. STA. = 3+20.04

PROP. CURVE PR111CR_6
PI STA. = 3+42.94
Δ = 7° 10' 57" (LT)
D = 15° 41' 51"
R = 365.00'
T = 22.91'
L = 45.76'
E = 0.72'
e = N/A
T.R. = N/A
S.E. RUN = N/A
P.R.C. STA. = 3+20.04
P.T. STA. = 3+65.79

PROP. CURVE PR111BR_1
PI STA. = 0+25.03
Δ = 7° 15' 09" (LT)
D = 14° 30' 19"
R = 395.00'
T = 25.03'
L = 50.00'
E = 0.79'
e = N/A
T.R. = N/A
S.E. RUN = N/A
P.C. STA. = 0+00.00
P.R.C. STA. = 0+50.00

PROP. CURVE PR111BR_2
PI STA. = 0+77.85
Δ = 21° 02' 22" (RT)
D = 38° 11' 50"
R = 150.00'
T = 27.85'
L = 55.08'
E = 2.56'
e = N/A
T.R. = N/A
S.E. RUN = N/A
P.R.C. STA. = 0+50.00
P.C.C. STA. = 1+05.08

PROP. CURVE PR111BR_3
PI STA. = 1+52.26
Δ = 48° 23' 42" (RT)
D = 54° 34' 03"
R = 105.00'
T = 47.18'
L = 88.69'
E = 10.11'
e = N/A
T.R. = N/A
S.E. RUN = N/A
P.C.C. STA. = 1+05.08
P.C.C. STA. = 1+93.77

PROP. CURVE PR111BR_4
PI STA. = 2+34.33
Δ = 15° 23' 54" (RT)
D = 19° 05' 55"
R = 300.00'
T = 40.56'
L = 80.63'
E = 2.73'
e = N/A
T.R. = N/A
S.E. RUN = N/A
P.C.C. STA. = 1+93.77
P.T. STA. = 2+74.40

MODEL: Detail Sheet
FILE NAME: pw:\\ildot-pw.bentley.com:PWIDOT\Documents\IDOT Offices\District 8\Projects\D876818\CADData\CADsheets\D880917 sht ATB-Ramp B-C Details 009.dgn

USER NAME = Jon.Dintelman	DESIGNED -	REVISED -	
	DRAWN -	REVISED -	
PLOT SCALE = 60.0000 ' / in.	CHECKED -	REVISED -	
PLOT DATE = 6/5/2024	DATE -	REVISED -	

STATE OF ILLINOIS
DEPARTMENT OF TRANSPORTATION

ALIGNMENT, TIES AND BENCHMARK
RAMP B & C – RIGHT AND LEFT TURNING ALIGNMENTS

SCALE: 1" = 30' | SHEET X OF XX SHEETS | STA. XXXX+XX TO STA. XXXX+XX

F.A.I. RTE.	SECTION	COUNTY	TOTAL SHEETS	SHEET NO.
270	60-3K-1	MADISON	576	58
		CONTRACT NO. 76818		
		ILLINOIS	FED. AID PROJECT	

CONTROL POINT #326

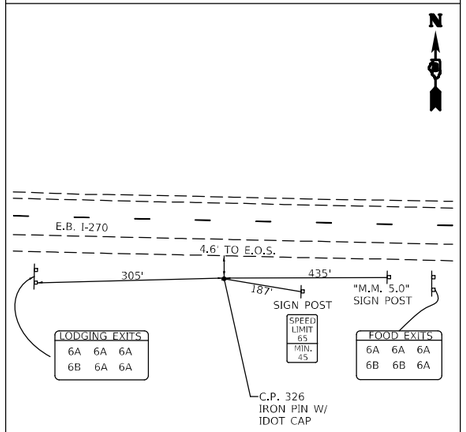

NORTH. 51452.8507
EAST. 60268.4691

CONTROL POINT #327

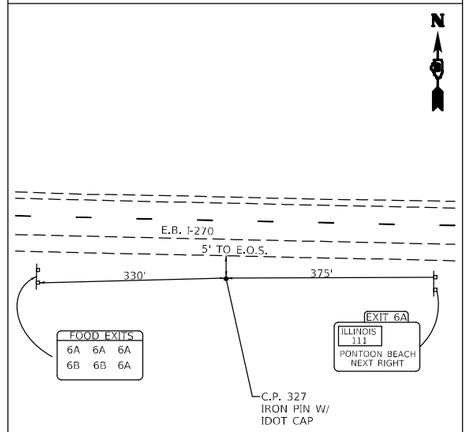

NORTH. 51432.6570
EAST. 61138.2348

CONTROL POINT #328

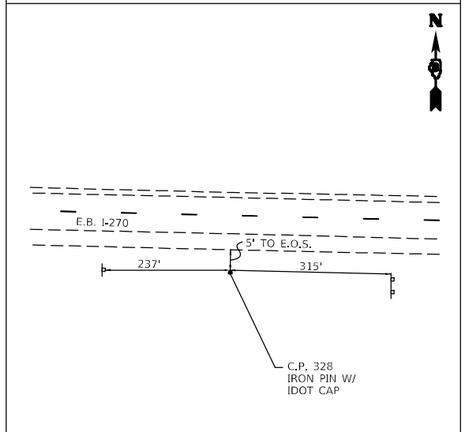

NORTH. 51413.3785
EAST. 61985.6041

CONTROL POINT #329

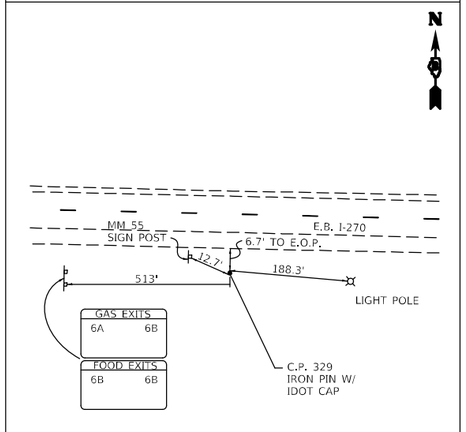

NORTH. 51392.8550
EAST. 62816.7837

CONTROL POINT #330

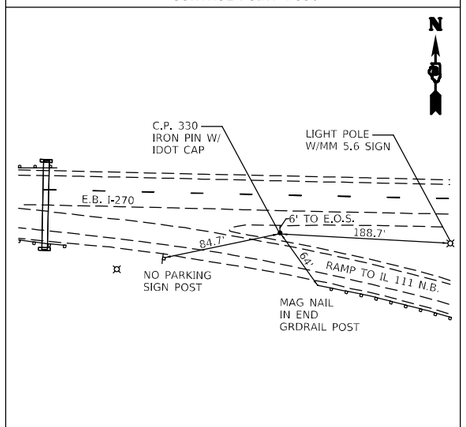

NORTH. 51374.2276
EAST. 63673.1175

CONTROL POINT #331

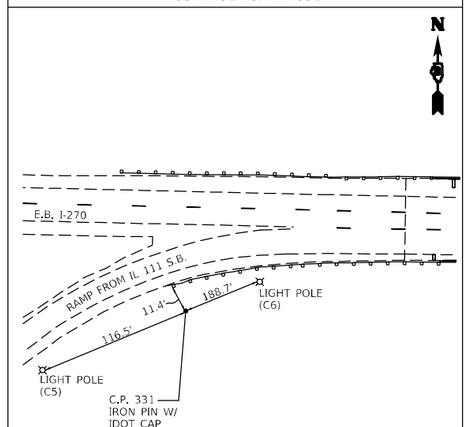

NORTH. 51320.5922
EAST. 64564.3853

CONTROL POINT #332

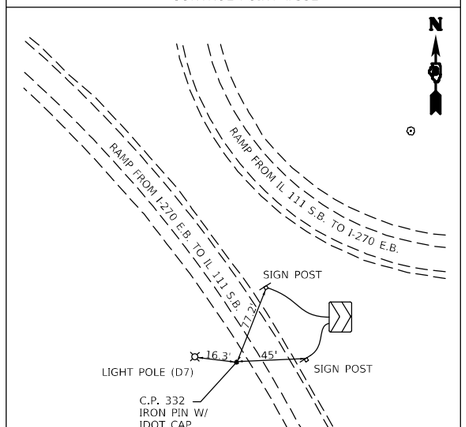

NORTH. 50819.0000
EAST. 64459.0837

CONTROL POINT #333

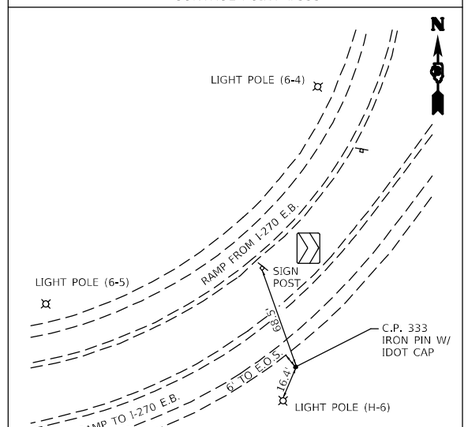

NORTH. 50797.4245
EAST. 65420.9274

MODEL: Sheet
FILE NAME: pw:\\ildot-pw.bentley.com:PWIDOT Documents\IDOT Offices\District 8\Projects\087618\CADData\CADSheets\0880917 ant ATB 010.dgn

USER NAME = Jon.Dintelman	DESIGNED -	REVISED -	
	DRAWN -	REVISED -	
PLOT SCALE = 50.0000 ' / in.	CHECKED -	REVISED -	
PLOT DATE = 6/5/2024	DATE -	REVISED -	

STATE OF ILLINOIS
DEPARTMENT OF TRANSPORTATION

ALIGNMENTS, TIES AND BENCHMARKS

SCALE: | SHEET OF SHEETS | STA. TO STA.

F.A.I. RTE.	SECTION	COUNTY	TOTAL SHEETS	SHEET NO.
270	60-3K-1	MADISON	576	59
		CONTRACT NO. 76818		
	ILLINOIS	FED. AID PROJECT		

CONTROL POINT #334

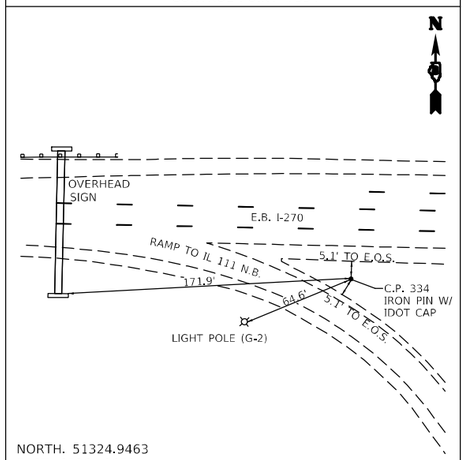

NORTH. 51324.9463
EAST. 65364.9659

CONTROL POINT #335

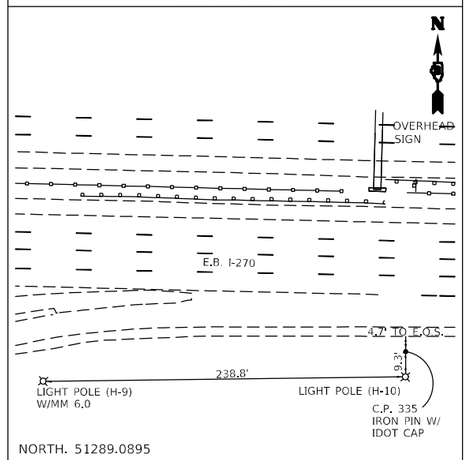

NORTH. 51289.0895
EAST. 66212.1129

CONTROL POINT #336

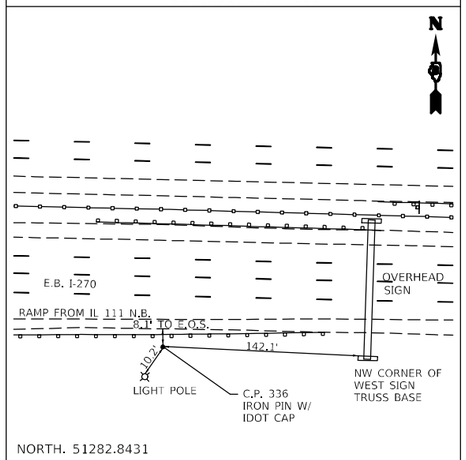

NORTH. 51282.8431
EAST. 67073.9747

CONTROL POINT #337

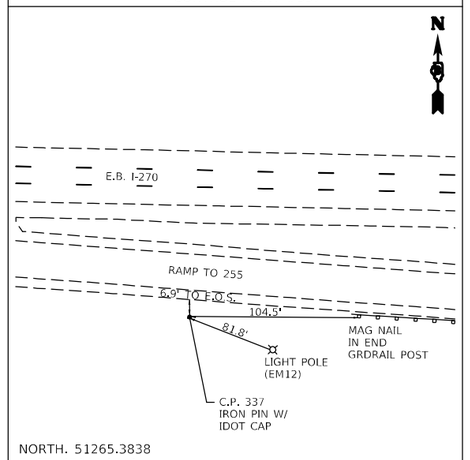

NORTH. 51265.3838
EAST. 67911.9549

MODEL: Sheet
FILE NAME: pw:\\ildot-pw.bentley.com:PWIDOT\Documents\IDOT Offices\District 8\Projects\D87681B\CADData\CADsheets\D800917.sht ATB 010.dgn

USER NAME = Jon.Dintelman	DESIGNED -	REVISED -	
	DRAWN -	REVISED -	
PLOT SCALE = 50.0000 ' / in.	CHECKED -	REVISED -	
PLOT DATE = 6/5/2024	DATE -	REVISED -	

STATE OF ILLINOIS
DEPARTMENT OF TRANSPORTATION

ALIGNMENTS, TIES AND BENCHMARKS

SCALE: | SHEET OF SHEETS | STA. TO STA.

F.A.I. RTE.	SECTION	COUNTY	TOTAL SHEETS	SHEET NO.
270	60-3K-1	MADISON	576	60
		CONTRACT NO. 76818		
		ILLINOIS	FED. AID PROJECT	

CONTROL POINT #363

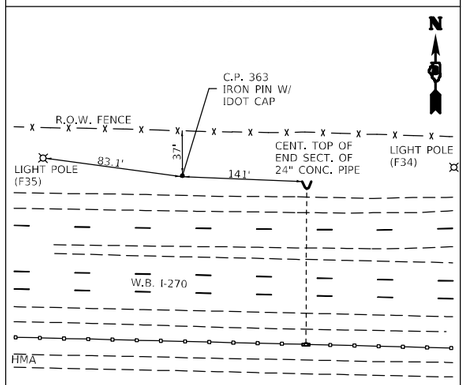

NORTH. 51432.2111
EAST. 68801.6438

CONTROL POINT #364

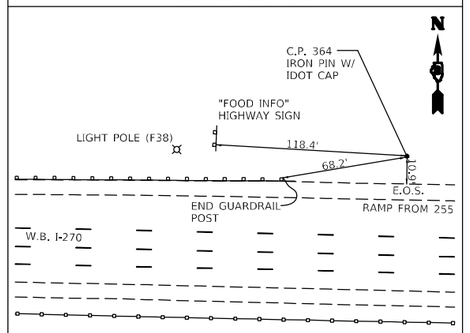

NORTH. 51451.73000
EAST. 67914.1002

CONTROL POINT #365

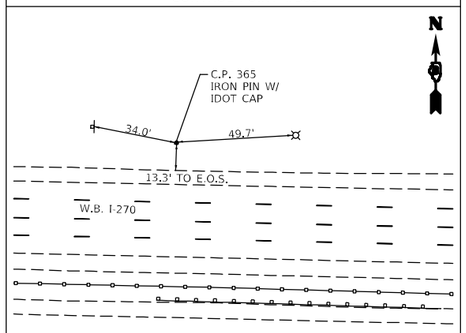

NORTH. 51459.6206
EAST. 67085.4100

CONTROL POINT #366

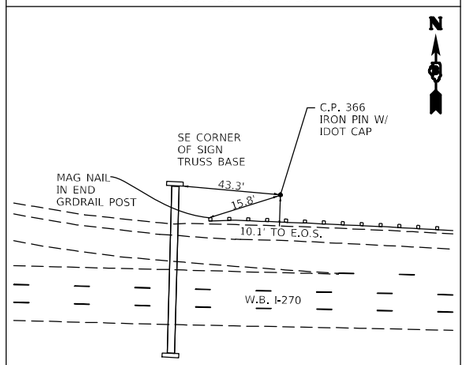

NORTH. 51485.5375
EAST. 66234.0705

CONTROL POINT #367

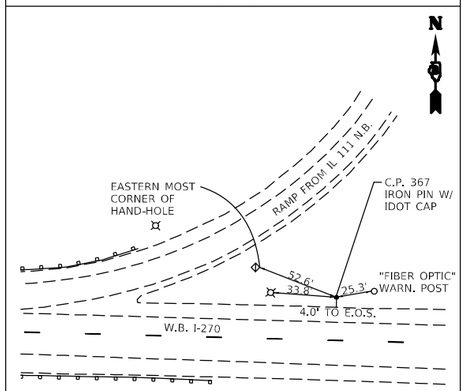

NORTH. 51478.3892
EAST. 65361.2934

CONTROL POINT #368

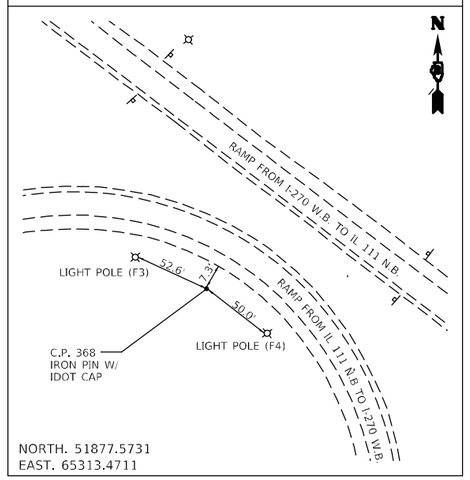

NORTH. 51877.5731
EAST. 65313.4711

CONTROL POINT #369

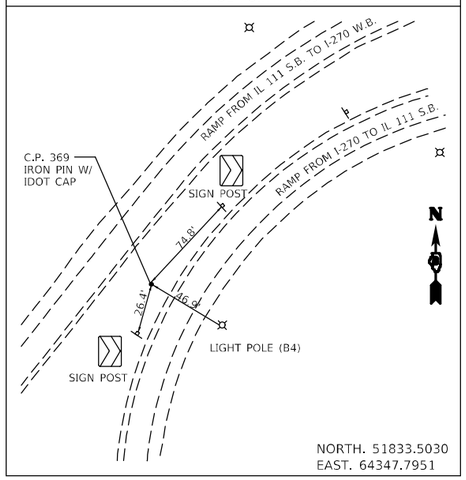

NORTH. 51833.5030
EAST. 64347.7951

CONTROL POINT #370

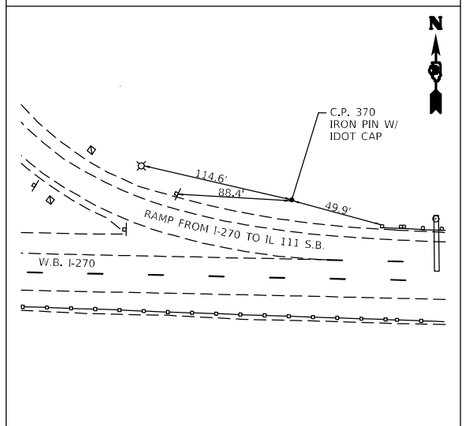

NORTH. 51512.1762
EAST. 64587.5739

MODEL: Sheet
FILE NAME: pw:\\ildot-pw.bentley.com:PWIDOT Documents\IDOT Offices\District 8\Projects\087618\CADData\CADsheets\0880917 ant ATB 010.dgn

USER NAME = Jon.Dintelman	DESIGNED -	REVISED -	
	DRAWN -	REVISED -	
PLOT SCALE = 50.0000 ' / in.	CHECKED -	REVISED -	
PLOT DATE = 6/5/2024	DATE -	REVISED -	

STATE OF ILLINOIS
DEPARTMENT OF TRANSPORTATION

ALIGNMENTS, TIES AND BENCHMARKS

SCALE: | SHEET OF SHEETS | STA. TO STA.

F.A.I. RTE.	SECTION	COUNTY	TOTAL SHEETS	SHEET NO.
270	60-3K-1	MADISON	576	61
		CONTRACT NO. 76818		
	ILLINOIS	FED. AID PROJECT		

CONTROL POINT #371

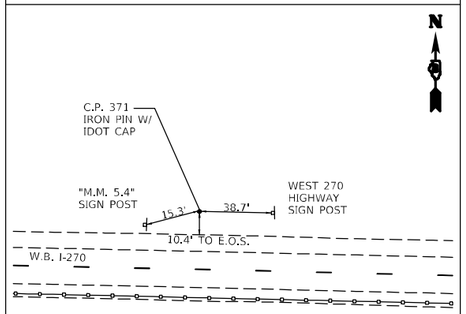

NORTH. 51542.9685
EAST. 62823.8155

CONTROL POINT #372

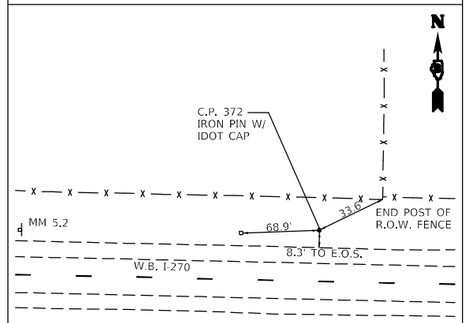

NORTH. 51558.9514
EAST. 61991.0894

CONTROL POINT #373

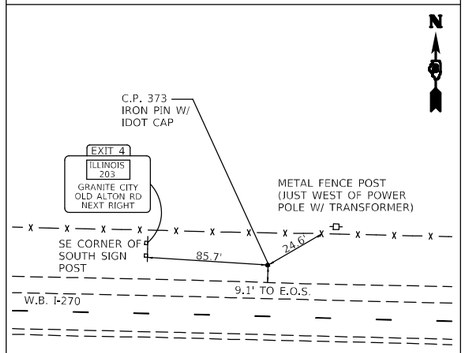

NORTH. 51579.0961
EAST. 61137.7894

CONTROL POINT #374

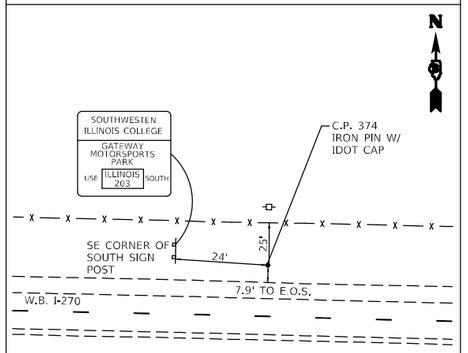

NORTH. 51597.8798
EAST. 60270.6310

MODEL: Sheet
FILE NAME: pw:\\ildot-pw.bentley.com:PWIDOT\Documents\IDOT Offices\District 8\Projects\D87681B\CADData\CADsheets\D880917.sht ATB 010.dgn

USER NAME = Jon.Dintelman	DESIGNED -	REVISED -	
	DRAWN -	REVISED -	
PLOT SCALE = 50.0000 ' / in.	CHECKED -	REVISED -	
PLOT DATE = 6/5/2024	DATE -	REVISED -	

STATE OF ILLINOIS
DEPARTMENT OF TRANSPORTATION

ALIGNMENTS, TIES AND BENCHMARKS

SCALE: | SHEET OF SHEETS | STA. TO STA.

F.A.I. RTE.	SECTION	COUNTY	TOTAL SHEETS	SHEET NO.
270	60-3K-1	MADISON	576	62
		CONTRACT NO. 76818		
		ILLINOIS	FED. AID PROJECT	

BENCHMARKS

BM 270-211: CUT " " ON NORTH SIDE OF NORTH LEG OF SIGN (LODGING EXITS 6A & 6B ETC.) FOUNDATION ON SOUTH SIDE OF I-270 (EB), APPROX. MM 4.9
ELEV. = 424.285' STA. 352+10 81' RT

BM 270-212: CUT " " ON NORTH SIDE OF NORTH LEG OF SIGN (EXITS 6A PONTOON BEACH NEXT RIGHT) FOUNDATION ON SOUTH SIDE OF I-270 (EB), APPROX. MM 5.15
ELEV. = 425.806' STA. 367+65 77' RT

BM 270-213: CUT " " ON NORTH SIDE OF LIGTH POLE (D-2) FOUNDATION ON SOUTH SIDE OF I-270 (EB), APPROX. MM 5.5
ELEV. = 422.864' STA. 385+24 90' RT

BM 270-214: CUT " " ON NORTH SIDE OF LIGTH POLE (C-6) FOUNDATION ON SOUTH SIDE OF I-270 (EB), APPROX. MM 5.7
ELEV. = 439.650' STA. 398+74 97' RT

BM 270-215: CUT "x" ON NORTH EAST BOLT OF LIGHT POLE (H-9) FOUNDATION (WITH MM 6.0) ON SOUTH SIDE OF I-270 (EB) & RAMP FROM IL 111 (NB)
ELEV. = 424.654' STA. 412+28 123' RT

BM 270-216: CUT "x" ON SOUTH EAST BOLT OF LIGHT POLE (EM11) ON SOUTH SIDE OF I-270 (EB) NEAR R.O.W. FENCE, APPROX. MM 6.3
ELEV. = 427.260' STA. 429+37 108' RT

BM 270-217: CUT " " ON SOUTH SIDE OF LIGHT POLE (EM13 A&B) FOUNDATION (WITH MM 6.6) IN GRASS MEDIAN BETWEEN I-270 (EB) & CD RAMP TO/FROM 255
ELEV. = 427.610' STA. 444+43 77' RT

BM 270-218: CUT " " ON SOUTH SIDE OF LIGHT POLE (B-12) FOUNDATION ON SOUTH SIDE OF CD RAMP TO/FROM 255 AT M.M 7.0
ELEV. = 427.238 STA. 465+41 157' RT

BM 270-225: CUT " " ON SOUTH SIDE OF LIGHT POLE (D-2) FOUNDATION (WITH MM 7.0) ON I-270 (WB) AT RAMP TO 255 (SB)
ELEV. = 426.795' STA. 465+24 101' LT

BM 270-226: CUT " " ON SOUTH SIDE OF SOUTH LEG OF SIGN (GREAT RIVER ROAD SOUTH EXIT 6A/NORTH EXIT 3B) ON NORTH SIDE OF I-270 (WB), APROX. MM 6.7
ELEV. = 425.202' STA. 449+88 89' LT

BM 270-227: CUT " " ON SOUTH SIDE OF LIGHT POLE (F-37) FOUNDATION (WITH SPEED LIMIT 65/MIN. 45) ON NORTH SIDE OF I-270 (WB) AT MM 6.4
ELEV. = 423.994' STA. 433+38 107' LT

BM 270-228: CUT "x" ON SOUTH SIDE OF LIGHT POLE (E-2) FOUNDATION ON NORTH SIDE OF I-270 (WB) AT RAMP TO IL 111 (NB), APPROX. MM 6.1
ELEV. = 424.252' STA. 417+44 105' LT

BM 270-229: CUT " " ON SOUTH SIDE OF LIGHT POLE (F-7) FOUNDATION (WITH MM 5.8) AT NORTHWEST CORNER OF SN 060-0047 OVER IL 111
ELEV. = 443.242' STA. 402+90 85' LT

BM 270-230: CUT " " ON SOUTH SIDE OF LIGHT POLE (A-7) FOUNDATION (WITH MM 5.6) ON NORTH SIDE OF I-270 (WB) & ON RAMP FROM IL 111 (SB)
ELEV. = 424.326' STA. 391+69 117' LT

BM 270-231: CUT " " ON SOUTH SIDE OF SOUTH LEG OF SING (EXIT 4/IL 203 GRANITE CITY /OLD ALTON RD/NEXT EXIT) ON NORTH SIDE OF I-270 (WB) APPROX. MM 5.1
ELEV. = 424.916' STA. 362+99 77' LT

BM 270-232: CUT " " ON NORTH SIDE OF LIGHT POLE (44) FOUNDATION (WITH MM 4.8) ON NORTH SIDE OF I-270 (WB) NEAR RAMP TO IL 203/GRANITE CITY
ELEV. = 433.328' STA. 348+19 71' LT

BM 270-251: CUT " " ON NORTHWEST SIDE OF LIGHT POLE (B-4) FOUNDATION ON EAST SIDE OF OFF RAMP OF I-270 (WB) IN NORTHWEST QUADRANT OF I-270/IL 111 INTERCHANGE
ELEV. = 424.120' STA. 396+32 386' LT

BM 270-252: CUT " " ON SOUTHEAST BOLT OF LIGHT POLE (C-3) ON NORTH SIDE OF ON RAMP TO I-270 (EB) IN SOUTHWEST QUADRANT OF I-270/IL 111 INTERCHANGE
ELEV. = 422.120' STA. 35+01 (IL 111) 157' RT

BM 270-253: CUT "x" ON NORTHWEST BOLT OF LIGHT POLE (NX4) ON NORTH END OF NORTHEAST QUADRANT OF I-270/IL 111
ELEV. = 423.326' STA. 34+25 (IL 111) 518' LT

COORDINATE TABLE				
POINT	CURVE	STATION	NORTHING	EASTING
PC	PR111N_3	620+93.67	52315.0811	65033.1397
PI	PR111N_3	621+71.99	52236.7585	65033.9128
PT	PR111N_3	622+50.00	52159.5115	65046.8712
PC	PR111N_4	622+50.00	52159.5115	65046.8712
PI	PR111N_4	623+73.35	52037.8580	65067.2788
PT	PR111N_4	624+87.19	51930.2917	65006.9006
PC	PR111N_7	626+20.83	51813.7555	64941.4875
PI	PR111N_7	627+23.60	51724.1393	64891.1849
PT	PR111N_7	628+20.75	51621.5537	64897.3176
PC	PR111N_8	628+20.75	51621.5537	64897.3176
PI	PR111N_8	628+74.36	51568.0438	64900.5165
PT	PR111N_8	629+27.20	51599.7726	64532.9681
PC	PR111N_11	631+85.31	51264.3630	64828.7919
PI	PR111N_11	632+31.36	51219.8532	64818.2793
PT	PR111N_11	632+76.62	51179.3130	64797.1100
PC	PR111N_12	632+76.62	51179.3130	64797.1100
PI	PR111N_12	633+69.82	51096.7064	64753.9745
PT	PR111N_12	634+58.78	51017.3072	65107.3585
PC	PR111N_15	635+86.21	50876.2588	64762.6226
PI	PR111N_15	637+29.33	50733.2410	64768.2332
PT	PR111N_15	638+59.01	50624.5305	64675.1333
PC	PR111N_16	638+59.01	50624.5305	64675.1333
PI	PR111N_16	639+03.43	50590.7901	64646.2380
PT	PR111N_16	639+47.38	50550.9011	64626.6878
PC	PR111N_17	643+89.72	50153.7058	64432.0172
PI	PR111N_17	645+16.05	49950.4720	64332.4097
PI	PR111N_17	648+42.38	49747.6716	64231.9228

COORDINATE TABLE				
POINT	CURVE	STATION	NORTHING	EASTING
PC	PR111S_3	521+60.32	52249.5402	64967.7835
PI	PR111S_3	522+13.82	52196.0436	64968.3115
PT	PR111S_3	522+66.50	52144.8320	64952.8344
PC	PR111S_4	522+66.50	52144.8320	64952.8344
PI	PR111S_4	523+72.92	52042.9609	64922.0470
PT	PR111S_4	524+73.60	51940.5065	64950.8341
PC	PR111S_7	526+01.03	51817.8306	64985.3029
PI	PR111S_7	527+23.80	51699.6385	65018.5119
PT	PR111S_7	528+37.18	51586.5994	64970.6123
PC	PR111S_8	528+37.18	51586.5994	64970.6123
PI	PR111S_8	528+68.07	51558.1552	64958.5593
PT	PR111S_8	528+98.82	51528.0898	64951.4583
PC	PR111S_11	531+05.63	51326.8128	64903.9198
PI	PR111S_11	531+50.21	51283.4278	64893.6730
PT	PR111S_11	531+94.35	51179.3130	64797.1100
PC	PR111S_12	531+94.35	51238.8519	64894.1691
PI	PR111S_12	533+33.60	51099.6102	64895.7187
PT	PR111S_12	534+59.41	50997.3612	64801.1893
PC	PR111S_15	535+93.05	50899.2320	64710.4688
PI	PR111S_15	536+95.16	50824.2545	64641.1519
PT	PR111S_15	537+91.76	50723.7662	64623.0260
PC	PR111S_16	537+91.76	50723.7662	64623.0260
PI	PR111S_16	538+40.59	50675.7102	64614.3577
PT	PR111S_16	538+88.79	50631.8620	64592.8671
PC	PR111S_17	543+88.94	50182.7522	64372.7525
PI	PR111S_17	546+15.13	49979.6468	64273.2079
PT	PR111S_17	548+41.32	49776.9745	64172.7845

COORDINATE TABLE				
POINT	CURVE	STATION	NORTHING	EASTING
PC	IL111_3	4+57.25	53952.9216	64990.5962
PI	IL111_3	8+15.82	53594.3610	64993.5107
PT	IL111_3	11+74.40	53235.8061	64997.0499
PC	IL111_6	20+08.45	52401.7921	65005.2825
PI	IL111_6	29+78.77	51431.5232	65014.8600
PT	IL111_6	39+13.90	50560.2276	64587.8266
PC	IL111_9	43+47.51	50170.8696	64396.9972
PI	IL111_9	47+00.25	49854.1270	64241.7575
PT	IL111_9	50+52.98	49538.4400	64084.3824
PC	IL111_10	50+52.98	49538.4400	64084.3824
PI	IL111_10	60+46.90	48648.9318	63640.9480
PT	IL111_10	70+03.21	47655.1054	63653.9036

MODEL: Sheet
FILE NAME: pw:\\ildot-pw.bentley.com:PWIDOT\Documents\IDOT Offices\District 8\Projects\087688\CADData\CADsheets\D800917_sht_ATB_010.dgn

USER NAME = Jon.Dintelman	DESIGNED -	REVISED -	
	DRAWN -	REVISED -	
PLOT SCALE = 50.0000 ' / in.	CHECKED -	REVISED -	
PLOT DATE = 6/5/2024	DATE -	REVISED -	

STATE OF ILLINOIS
DEPARTMENT OF TRANSPORTATION

ALIGNMENTS, TIES AND BENCHMARKS

SCALE: | SHEET OF SHEETS | STA. TO STA.

F.A.I. RTE.	SECTION	COUNTY	TOTAL SHEETS	SHEET NO.
270	60-3K-1	MADISON	576	64
		CONTRACT NO. 76818		
		ILLINOIS	FED. AID PROJECT	

COORDINATE TABLE				
POINT	CURVE	STATION	NORTHING	EASTING
PC	INT111A_1	1097+94.10	51444.1107	66797.8485
PI	INT111A_1	1100+64.31	51450.0430	66527.7044
PT	INT111A_1	1103+34.46	51465.6182	66257.9444
PC	INT111A_4	1103+91.12	51468.8840	66201.3819
PI	INT111A_4	1105+94.71	51480.6194	65998.1276
PT	INT111A_4	1107+94.76	51556.2469	65809.1025

COORDINATE TABLE				
POINT	CURVE	STATION	NORTHING	EASTING
PC	INT111B_3	2003+76.01	50910.1974	65561.5475
PI	INT111B_3	2004+64.75	50910.1974	65286.9191
PT	INT111B_3	2005+45.72	51144.2103	65148.3798
PC	INT111B_6	2008+85.71	51154.8255	65561.5475
PI	INT111B_6	2011+58.02	51315.3607	65561.5475
PT	INT111B_6	2014+12.17	51315.3566	66053.8169

COORDINATE TABLE				
POINT	CURVE	STATION	NORTHING	EASTING
PC	INT111C_1	3298+54.88	51403.1137	63077.1135
PI	INT111C_1	3300+84.12	51393.5106	63306.1552
PT	INT111C_1	3303+13.17	51367.6881	63533.9390
PC	INT111C_4	3303+27.88	51366.0312	63548.5543
PI	INT111C_4	3305+66.36	51339.1681	63785.5174
PT	INT111C_4	3308+01.84	51339.1681	64006.3239

COORDINATE TABLE				
POINT	CURVE	STATION	NORTHING	EASTING
PC	INT111D_3	4403+74.12	51920.7200	64605.1566
PI	INT111D_3	4404+75.25	51932.7040	64504.7449
PT	INT111D_3	4405+65.11	51868.0276	64427.0076
PC	INT111D_6	4408+59.97	51679.4430	64200.3396
PI	INT111D_6	4409+80.37	51602.4409	64107.7875
PT	INT111D_6	4410+99.12	51554.7214	63997.2521
PC	INT111D_7	4410+99.12	51554.7214	63997.2521
PI	INT111D_7	4411+79.99	51522.6665	63923.0015
PT	INT111D_7	4412+58.92	51520.4191	63842.1583
PC	INT111D_8	4412+58.92	51520.4191	63842.1583
PI	INT111D_8	4414+51.62	51515.0642	63649.5255
PT	INT111D_8	4416+44.25	51519.4351	63456.8678

COORDINATE TABLE

POINT	CURVE	STATION	NORTHING	EASTING
PC	PR111AL_3	10+95.23	51782.0461	65147.8216
PI	PR111AL_3	10+50.00	51765.2460	65189.8122
PT	PR111AL_3	11+37.85	51772.8351	65103.5429
PC	PR111AL_4	11+37.85	51772.8351	65103.5428
PI	PR111AL_4	11+47.76	51770.8173	65093.8432
PT	PR111AL_4	11+57.59	51766.7379	65084.8147
PC	PR111AL_5	11+57.59	51766.7379	65084.8146
PI	PR111AL_5	12+15.32	51742.9652	65032.2010
PT	PR111AL_5	12+62.31	51675.6085	65026.4820
PC	PR111AL_6	12+62.31	51685.5141	65026.4820
PI	PR111AL_6	12+87.34	51660.6011	65024.0020
PT	PR111AL_6	13+12.31	51636.2288	65018.2749

COORDINATE TABLE

POINT	CURVE	STATION	NORTHING	EASTING
PC	PR111BR_1	0+00.00	50742.0334	64774.2604
PI	PR111BR_1	0+25.03	50765.8853	64781.8603
PT	PR111BR_1	0+50.00	50790.5059	64786.3882
PC	PR111BR_2	0+50.00	50790.5059	64786.3882
PI	PR111BR_2	0+77.85	50817.9003	64791.4263
PT	PR111BR_2	1+05.08	50841.6605	64805.9636
PC	PR111BR_3	1+05.08	50841.6605	64805.9636
PI	PR111BR_3	1+52.26	50881.9081	64830.5887
PT	PR111BR_3	1+93.77	50890.2189	64877.0342
PC	PR111BR_4	1+93.77	50890.2189	64877.0342
PI	PR111BR_4	2+34.33	50897.3627	64916.9576
PT	PR111BR_4	2+74.40	50893.6492	64957.3447

COORDINATE TABLE

POINT	CURVE	STATION	NORTHING	EASTING
PC	PR111DR_1	0+00.00	52065.1775	64908.0795
PI	PR111DR_1	0+25.03	52040.1981	64906.4356
PT	PR111DR_1	0+50.00	52015.2110	64907.9584
PC	PR111DR_2	0+50.00	52015.2110	64907.9584
PI	PR111DR_2	1+01.96	51963.3457	64911.1192
PT	PR111DR_2	1+44.25	51934.6757	64867.7830
PC	PR111DR_3	1+44.25	51934.6757	64867.7830
PI	PR111DR_3	1+57.56	51927.3326	64856.6836
PT	PR111DR_3	1+70.62	51923.9785	64843.0046
PC	PR111DR_4	1+70.62	51923.9785	64843.8046
PI	PR111DR_4	2+13.14	51923.9785	64843.8046
PT	PR111DR_4	2+54.67	51918.3012	64760.4348

COORDINATE TABLE

POINT	CURVE	STATION	NORTHING	EASTING
PC	PR111AR_3	0+50.00	51814.7371	65195.3312
PI	PR111AR_3	1+25.08	51842.6272	65125.6222
PT	PR111AR_3	1+94.47	51907.8490	65088.4293
PC	PR111AR_4	1+94.47	51907.8490	65088.4293
PI	PR111AR_4	2+14.20	51924.9865	65078.6566
PT	PR111AR_4	2+33.43	51944.5514	65076.1246
PC	PR111AR_5	2+33.43	51944.5514	65076.1246
PI	PR111AR_5	2+83.63	51994.3408	65069.6811
PT	PR111AR_5	3+33.17	52043.9644	65077.2968
PC	PR111AR_6	3+33.17	52043.9644	65077.2968
PI	PR111AR_6	3+58.21	52068.7108	65081.0946
PT	PR111AR_6	3+83.17	52093.7416	65081.6128

COORDINATE TABLE

POINT	CURVE	STATION	NORTHING	EASTING
PC	PR111CL_3	10+50.00	51052.8356	64550.7662
PI	PR111CL_3	10+89.48	51037.9210	64587.3175
PT	PR111CL_3	11+27.95	51038.0135	64626.7945
PC	PR111CL_4	11+27.95	51038.0135	64626.7945
PI	PR111CL_4	11+67.34	51038.1057	64666.1814
PT	PR111CL_4	12+04.07	51061.5209	64697.8525
PC	PR111CL_5	12+04.07	51061.5209	64697.8525
PI	PR111CL_5	12+45.73	51086.2914	64731.3568
PT	PR111CL_5	12+84.50	51126.2103	64743.2979
PC	PR111CL_6	12+84.50	51126.2103	64743.2979
PI	PR111CL_6	13+09.54	51150.1963	64750.4730
PT	PR111CL_6	13+34.50	51173.0335	64760.7329

COORDINATE TABLE

POINT	CURVE	STATION	NORTHING	EASTING
PC	PR111BL_1	10+00.00	51140.8164	64912.3450
PI	PR111BL_1	10+25.04	51116.5607	64906.1426
PT	PR111BL_1	10+50.00	51093.3285	64896.8115
PC	PR111BL_2	10+50.00	51093.3285	64896.8115
PI	PR111BL_2	11+22.01	51026.5051	64869.9722
PT	PR111BL_2	11+77.52	50975.1771	64920.4811
PC	PR111BL_3	11+77.52	50975.1771	64920.4811
PI	PR111BL_3	12+00.91	50958.5049	64936.8872
PT	PR111BL_3	12+23.55	50950.3732	64958.8188
PC	PR111BL_4	12+23.55	50950.3732	64958.8188
PI	PR111BL_4	12+56.66	50938.8614	64989.8667
PT	PR111BL_4	12+89.39	50935.8295	65022.8409

COORDINATE TABLE

POINT	CURVE	STATION	NORTHING	EASTING
PC	PR111DL_1	10+50.00	51052.8356	64550.7662
PI	PR111DL_1	10+89.48	51037.9210	64587.3175
PT	PR111DL_1	11+27.95	51038.0135	64626.7945
PC	PR111DL_2	10+50.00	51740.5620	64879.5808
PI	PR111DL_2	11+22.01	51810.1318	64898.1754
PT	PR111DL_2	11+77.52	51855.0019	64841.8515
PC	PR111DL_3	11+77.52	51855.0019	64841.8515
PI	PR111DL_3	11+88.22	51861.6670	64833.4851
PT	PR111DL_3	11+98.82	51866.3047	64823.8461
PC	PR111DL_4	11+98.82	51866.3047	64823.8461
PI	PR111DL_4	12+36.25	51882.5312	64790.1208
PT	PR111DL_4	12+73.00	51886.9664	64752.9587

SUGGESTED CONSTRUCTION SEQUENCING

PRESTAGE CONSTRUCTION

IL-111 CONSTRUCTION

1. INSTALL CONSTRUCTION SIGNING AS SHOWN ON THE IL ROUTE 111 PRESTAGE CONSTRUCTION PLANS AND APPROPRIATE HIGHWAY STANDARDS.
2. INSTALL TEMPORARY PAVEMENT FROM STA. 18+55 (RT) TO STA. 19+10 (RT) AND STA. 21+57 (LT) TO STA. 18+84 (RT) (C5) AS SHOWN ON THE IL ROUTE 111 PRESTAGE CONSTRUCTION PLANS.
3. CONSTRUCT THE 48" ELLIPTICAL PIPE UNDER RAMP C8 DURING A 1 NIGHT CLOSURE OF RAMP C8. REPAIR PAVEMENT WITH A HMA PAVEMENT PATCH. SEE DRAINAGE PLANS FOR ADDITIONAL INFORMATION.
4. CONSTRUCT THE 48" ELLIPTICAL PIPE UNDER RAMP C4 DURING A 1 NIGHT CLOSURE OF RAMP C4. REPAIR PAVEMENT WITH A HMA PAVEMENT PATCH. SEE DRAINAGE PLANS FOR ADDITIONAL INFORMATION.
5. INSTALL TEMPORARY STRIPING FOR STAGE 1 CONSTRUCTION AS SHOWN ON THE IL ROUTE 111 STAGE 1 CONSTRUCTION PLANS.
6. EXTEND THE DOWNSTREAM END OF THE EXISTING 8'X4' BOX CULVERT AT STA. 42+15.95 AND INSTALL DRAINAGE PIPES FROM STRUCTURE 34E AND STRUCTURE 39W TO THE CULVERT EXTENSION.
7. EXTEND THE UPSTREAM END OF THE EXISTING 8'X4' BOX CULVERT AT STA. 42+15.95.

I-270 CONSTRUCTION

1. INSTALL CONSTRUCTION SIGNING AS SHOWN ON THE 1-270 PRESTAGE CONSTRUCTION PLANS AND APPROPRIATE HIGHWAY STANDARDS.
2. REPLACE THE I-270 WESTBOUND INSIDE SHOULDER BETWEEN STA. 372+85 AND STA. 399+99.

STAGE 1 CONSTRUCTION

IL-111 CONSTRUCTION

1. ADJUST CONSTRUCTION SIGNING AS SHOWN ON THE IL ROUTE 111 STAGE 1 CONSTRUCTION PLANS.
2. CLOSE IL ROUTE 111 TO THROUGH TRAFFIC BETWEEN CHAIN OF ROCKS ROAD AND ENGINEERS ROAD/TRADEPORT PARKWAY AT THE EXISTING DIRECTIONAL RAMPS CONNECTING I-270 AND IL ROUTE 111.
3. CONSTRUCT THE STORM SYSTEM ALONG THE WEST SIDE OF IL ROUTE 111 FROM STRUCTURE 6W TO STRUCTURE 13W. INSTALL A PORTION OF THE PROPOSED 48" ELLIPTICAL PIPE OUTFALL PIPE FROM STRUCTURE 13W.
4. CONSTRUCT THE STORM SYSTEM ALONG THE EAST SIDE OF IL ROUTE 111 FROM STRUCTURE 3E TO STRUCTURE 12E. INSTALL A PORTION OF THE PROPOSED 48" ELLIPTICAL PIPE OUTFALL PIPE FROM STRUCTURE 12E.
5. CONSTRUCT IMPROVEMENTS ALONG IL ROUTE 111 AS SHOWN ON THE IL ROUTE 111 STAGE 1 CONSTRUCTION PLANS FROM STA. 20+17 AND STA. 48+00.
6. CONSTRUCT RAMP IMPROVEMENTS BEGINNING AT IL ROUTE 111 TO STA. 1108+85 (RAMP A), STA. 2009+95 (RAMP B), STA. 3312+05 (RAMP C), AND STA. 4406+70 (RAMP D).
7. INSTALL SIGNALS AT THE RAMP TERMINAL INTERSECTIONS (SEE SIGNAL PLANS).

I-270 CONSTRUCTION

1. MODIFY/REMOVE THE EXISTING GUIDE SIGNS ALONG I-270 AS SHOWN ON THE I-270 STAGE 1 CONSTRUCTION PLANS.
2. DURING OFF PEAK HOURS AND PRIOR TO THE CLOSURE OF IL ROUTE 111, CLOSE THE LOOP RAMPS BETWEEN I-270 AND IL ROUTE 111 AND THE OUTSIDE DRIVING LANES ALONG I-270W AND I-270E AS SHOWN ON THE I-270 STAGE 1 CONSTRUCTION PLANS AND APPROPRIATE HIGHWAY STANDARDS. INSTALL TEMPORARY CONCRETE BARRIER ADJACENT TO THE OUTSIDE DRIVING LANES BETWEEN THE EXISTING LOOP RAMPS.

STAGE 1A CONSTRUCTION (MAXIMUM 14 CALENDAR DAY CLOSURE PERMITTED)

IL-111 CONSTRUCTION

1. CLOSE IL ROUTE 111 TO SOUTHBOUND TRAFFIC AT CHAIN OF ROCKS ROAD TO RAMP C1 AS SHOWN ON THE IL ROUTE 111 STAGE 1A CONSTRUCTION PLANS.
2. CONTINUE CONSTRUCTION OF THE STORM SYSTEM ALONG THE WEST SIDE OF IL ROUTE 111 FROM STRUCTURE 1W TO STRUCTURE 6W.
3. CONSTRUCT A PORTION OF THE IMPROVEMENTS ALONG IL ROUTE 111 FROM CHAIN OF ROCKS ROAD TO THE BEGINNING LIMITS OF STAGE 1 AS SHOWN ON THE IL ROUTE 111 STAGE 1A CONSTRUCTION PLANS.
4. REOPEN IL ROUTE 111 TO SOUTHBOUND TRAFFIC AT THE CHAIN OF ROCKS ROAD TO RAMP D AND OPEN RAMP D AS SHOWN ON THE RAMP D TRAFFIC AFTER RAMP CONSTRUCTION DETAIL. ALL ENTERING IL ROUTE 111 SOUTHBOUND TRAFFIC TO I-270 WESTBOUND SHALL ENTER I-270 WESTBOUND ALONG RAMP D.

I-270 CONSTRUCTION

1. SHIFT I-270 WESTBOUND TRAFFIC TO THE INSIDE SHOULDER AS SHOWN ON THE I-270 STAGE 1A PLANS AND STAGING TYPICAL SECTIONS. INSTALL TEMPORARY CONCRETE BARRIER ALONG THE SHIFTED I-270 WESTBOUND OUTSIDE LANE.
2. COMPLETE CONSTRUCTION OF RAMP D AND THE MODIFIED ENTRANCE RAMP TERMINAL ADJACENT TO I-270W.
3. REMOVE TEMPORARY CONCRETE BARRIER AND SHIFT I-270 WESTBOUND TRAFFIC TO ULITIMATE LANES.
4. OPEN RAMP D. ALL ENTERING IL ROUTE 111 SOUTHBOUND TRAFFIC TO I-270 WESTBOUND SHALL ENTER I-270 WESTBOUND ALONG RAMP D.

STAGE 1B CONSTRUCTION (MAXIMUM 14 CALENDAR DAY CLOSURE PERMITTED)

IL-111 CONSTRUCTION

1. CLOSE IL ROUTE 111 TO NORTHBOUND TRAFFIC AT CHAIN OF ROCK ROAD FROM RAMP C5 AS SHOWN ON THE IL ROUTE 111 STAGE 1B CONSTRUCTION PLANS.
2. CONTINUE CONSTRUCTION OF THE STORM SYSTEM ALONG THE EAST SIDE OF IL ROUTE 111 FROM STRUCTURE 1E TO STRUCTURE 3E.
3. CONSTRUCT THE REMAINING PORTION OF THE IMPROVEMENTS ALONG IL ROUTE 111 FROM CHAIN OF ROCKS ROAD TO THE BEGINNING LIMITS OF STAGE 1 AS SHOWN ON THE IL ROUTE 111 STAGE 1B CONSTRUCTION PLANS.
4. REOPEN IL ROUTE 111 TO NORTHBOUND TRAFFIC AT THE CHAIN OF ROCKS ROAD FROM RAMP A AND OPEN RAMP A AS SHOWN ON THE RAMP A TRAFFIC AFTER RAMP CONSTRUCTION DETAIL. ALL EXITING I-270 WESTBOUND TRAFFIC TO IL ROUTE 111 NORTHBOUND SHALL EXIT I-270 WESTBOUND ALONG RAMP A.

I-270 CONSTRUCTION

1. MODIFY THE EXISTING GUIDE SIGNS ALONG I-270 EASTBOUND AS SHOWN ON THE I-270 STAGE 1B CONSTRUCTION PLANS.
2. CLOSE THE I-270 WESTBOUND EXIT RAMP TO IL ROUTE 111 NORTHBOUND AND THE EXIT RAMP AUXILARY LANE TO COMPLETE CONSTRUCTION OF RAMP A AS SHOWN ON THE RAMP A TRAFFIC AFTER RAMP CONSTRUCTION DETAIL.
3. DURING OFF-PEAK HOURS CLOSE THE OUTSIDE THROUGH LANE OF I-270 WESTBOUND TO CONSTRUCT THE EXIT RAMP TERMINAL.
4. OPEN RAMP A. ALL EXITING I-270 WESTBOUND TRAFFIC TO IL ROUTE 111 NORTHBOUND SHALL EXIT I-270 WESTBOUND ALONG RAMP A.

STAGE 1C CONSTRUCTION (MAXIMUM 14 CALENDAR DAY CLOSURE PERMITTED)

IL-111 CONSTRUCTION

1. CLOSE IL ROUTE 111 TO NORTHBOUND TRAFFIC AT ENGINEERS ROAD/TRADEPORT PARKWAY TO RAMP C8 AS SHOWN ON THE IL ROUTE 111 STAGE 1C CONSTRUCTION PLANS.
2. COMPLETE CONSTRUCTION OF THE STORM SYSTEM ALONG THE EAST SIDE OF IL ROUTE 111 FROM STRUCTURE 12E TO STRUCTURE 13E.
3. CONSTRUCT THE REMAINING PORTION OF THE IMPROVEMENTS ALONG IL ROUTE 111 NORTHBOUND FROM THE ENDING LIMIT OF STAGE 1 TO STA. 48+00 AS SHOWN ON THE IL ROUTE 111 STAGE 1C CONSTRUCTION PLANS.
4. REOPEN IL ROUTE 111 TO NORTHBOUND TRAFFIC AT THE ENGINEERS ROAD/TRADEPORT PARKWAY AND OPEN RAMP B AS SHOWN ON THE RAMP B TRAFFIC AFTER RAMP CONSTRUCTION DETAIL. ALL ENTERING IL ROUTE 111 NORTHBOUND TRAFFIC TO I-270 EASTBOUND SHALL ENTER I-270 EASTBOUND ALONG RAMP B.

I-270 CONSTRUCTION

1. CONTINUE THE CLOSURE LIMITS OF THE I-270 EASTBOUND AUXILARY LANE FROM THE TEMPORARY CONCRETE BARRIER ALONG THE I-270 EASTBOUND OUTSIDE LANE AS SHOWN ON THE I-270 STAGE 1C CONSTRUCTION PLANS.
2. COMPLETE CONSTRUCTION OF RAMP B AND THE ENTRANCE RAMP TERMINAL.
3. OPEN RAMP B. ALL ENTERING IL ROUTE 111 NORTHBOUND TRAFFIC TO I-270 EASTBOUND SHALL ENTER I-270 EASTBOUND ALONG RAMP B.

STAGE 1D CONSTRUCTION (MAXIMUM 14 CALENDAR DAY CLOSURE PERMITTED)

IL-111 CONSTRUCTION

1. CLOSE IL ROUTE 111 TO SOUTHBOUND TRAFFIC FROM RAMP C4 TO ENGINEERS ROAD/TRADEPORT PARKWAY AS SHOWN ON THE IL ROUTE 111 STAGE 1D CONSTRUCTION PLANS.
2. COMPLETE CONSTRUCTION OF THE STORM SYSTEM ALONG THE WEST SIDE OF IL ROUTE 111 FROM STRUCTURE 13W TO STRUCTURE 14W.
3. CONSTRUCT THE REMAINING PORTION OF THE IMPROVEMENTS ALONG IL ROUTE 111 SOUTHBOUND FROM THE ENDING LIMITS OF STAGE 1 TO STA. 48+00 AS SHOWN ON THE IL ROUTE 111 STAGE 1D CONSTRUCTION PLANS.
4. REOPEN IL ROUTE 111 TO SOUTHBOUND TRAFFIC FROM RAMP C AND OPEN RAMP C AS SHOWN ON THE RAMP C TRAFFIC AFTER RAMP CONSTRUCTION DETAIL. ALL EXITING I-270 EASTBOUND TRAFFIC TO IL ROUTE 111 SOUTHBOUND SHALL EXIT I-270 EASTBOUND ALONG RAMP C.

I-270 CONSTRUCTION

1. MODIFY THE EXISTING GUIDE SIGNS ALONG I-270 WESTBOUND AS SHOWN ON THE I-270 STAGE 1D CONSTRUCTION PLANS.
2. EXTEND THE DOWNSTREAM END THE EXISTING 8'X4' BOX CULVERT ALONG RAMP C AT STA. 3306+05.
3. CLOSE THE I-270 EASTBOUND EXIT RAMP TO IL ROUTE 111 SOUTHBOUND.
4. DURING OFF-PEAK HOURS CLOSE THE OUTSIDE THROUGH LANE OF I-270 EASTBOUND TO COMPLETE CONSTRUCTION OF THE RAMP C EXIT RAMP TERMINAL.
5. OPEN RAMP C. ALL EXITING I-270 EASTBOUND TRAFFIC TO IL ROUTE 111 SOUTHBOUND SHALL EXIT I-270 EASTBOUND ALONG RAMP C.

STAGE 2 CONSTRUCTION

IL-111 CONSTRUCTION

1. INSTALL FINAL SIGNING (SEE SIGNING PLANS).
2. INSTALL FINAL STRIPING (SEE STRIPING PLANS).

I-270 CONSTRUCTION

1. INSTALL FINAL SIGNING (SEE SIGNING PLANS).
2. INSTALL FINAL STRIPING (SEE STRIPING PLANS).

STAGE 3 CONSTRUCTION

IL-111 CONSTRUCTION

1. SWITCH TRAFFIC TO ULTIMATE LANES.

I-270 CONSTRUCTION

1. NO CONSTRUCTION IN THIS STAGE.

PEAK HOUR RESTRICTIONS, MONDAY – THURSDAY

IL 203 TO IL 111	12:00 AM	1:00 AM	2:00 AM	3:00 AM	4:00 AM	5:00 AM	6:00 AM	7:00 AM	8:00 AM	9:00 AM	10:00 AM	11:00 AM	12:00 PM	1:00 PM	2:00 PM	3:00 PM	4:00 PM	5:00 PM	6:00 PM	7:00 PM	8:00 PM	9:00 PM	10:00 PM	11:00 PM
EASTBOUND	CLOSURES ALLOWED						NO LANE CLOSURES ALLOWED														CLOSURES ALLOWED			
WESTBOUND	CLOSURES ALLOWED						NO LANE CLOSURES ALLOWED														CLOSURES ALLOWED			

PEAK HOUR RESTRICTIONS, FRIDAY

IL 203 TO IL 111	12:00 AM	1:00 AM	2:00 AM	3:00 AM	4:00 AM	5:00 AM	6:00 AM	7:00 AM	8:00 AM	9:00 AM	10:00 AM	11:00 AM	12:00 PM	1:00 PM	2:00 PM	3:00 PM	4:00 PM	5:00 PM	6:00 PM	7:00 PM	8:00 PM	9:00 PM	10:00 PM	11:00 PM
EASTBOUND	CLOSURES ALLOWED						NO LANE CLOSURES ALLOWED															CLOSURES ALLOWED		
WESTBOUND	CLOSURES ALLOWED						NO LANE CLOSURES ALLOWED															CLOSURES ALLOWED		

PEAK HOUR RESTRICTIONS, SATURDAY

IL 203 TO IL 111	12:00 AM	1:00 AM	2:00 AM	3:00 AM	4:00 AM	5:00 AM	6:00 AM	7:00 AM	8:00 AM	9:00 AM	10:00 AM	11:00 AM	12:00 PM	1:00 PM	2:00 PM	3:00 PM	4:00 PM	5:00 PM	6:00 PM	7:00 PM	8:00 PM	9:00 PM	10:00 PM	11:00 PM
EASTBOUND	CLOSURES ALLOWED								NO LANE CLOSURES ALLOWED													CLOSURES ALLOWED		
WESTBOUND	CLOSURES ALLOWED								NO LANE CLOSURES ALLOWED													CLOSURES ALLOWED		

PEAK HOUR RESTRICTIONS, SUNDAY

IL 203 TO IL 111	12:00 AM	1:00 AM	2:00 AM	3:00 AM	4:00 AM	5:00 AM	6:00 AM	7:00 AM	8:00 AM	9:00 AM	10:00 AM	11:00 AM	12:00 PM	1:00 PM	2:00 PM	3:00 PM	4:00 PM	5:00 PM	6:00 PM	7:00 PM	8:00 PM	9:00 PM	10:00 PM	11:00 PM
EASTBOUND	CLOSURES ALLOWED									NO LANE CLOSURES ALLOWED												CLOSURES ALLOWED		
WESTBOUND	CLOSURES ALLOWED									NO LANE CLOSURES ALLOWED												CLOSURES ALLOWED		

PEAK HOUR RESTRICTIONS, MONDAY – THURSDAY

IL 111 TO I-255	12:00 AM	1:00 AM	2:00 AM	3:00 AM	4:00 AM	5:00 AM	6:00 AM	7:00 AM	8:00 AM	9:00 AM	10:00 AM	11:00 AM	12:00 PM	1:00 PM	2:00 PM	3:00 PM	4:00 PM	5:00 PM	6:00 PM	7:00 PM	8:00 PM	9:00 PM	10:00 PM	11:00 PM
2 LANE CLOSURE (EASTBOUND)	2 LANE CLOSURE ALLOWED						NO 2 LANE CLOSURES ALLOWED															2 LANE CLOSURE ALLOWED		
1 LANE CLOSURE (EASTBOUND)	1 LANE CLOSURE ALLOWED														NO 1 LANE CLOSURES ALLOWED		1 LANE CLOSURE ALLOWED							
2 LANE CLOSURE (WESTBOUND)	2 LANE CLOSURE ALLOWED				NO 2 LANE CLOSURES ALLOWED																	2 LANE CLOSURE ALLOWED		
1 LANE CLOSURE (WESTBOUND)	1 LANE CLOSURE ALLOWED						NO LANE CLOSURE		1 LANE CLOSURE ALLOWED							NO LANE CLOSURE		1 LANE CLOSURE ALLOWED						

PEAK HOUR RESTRICTIONS, FRIDAY

IL 111 TO I-255	12:00 AM	1:00 AM	2:00 AM	3:00 AM	4:00 AM	5:00 AM	6:00 AM	7:00 AM	8:00 AM	9:00 AM	10:00 AM	11:00 AM	12:00 PM	1:00 PM	2:00 PM	3:00 PM	4:00 PM	5:00 PM	6:00 PM	7:00 PM	8:00 PM	9:00 PM	10:00 PM	11:00 PM
2 LANE CLOSURE (EASTBOUND)	2 LANE CLOSURE ALLOWED						NO 2 LANE CLOSURES ALLOWED															2 LANE CLOSURE ALLOWED		
1 LANE CLOSURE (EASTBOUND)	1 LANE CLOSURE ALLOWED														NO 1 LANE CLOSURES ALLOWED		1 LANE CLOSURE ALLOWED							
2 LANE CLOSURE (WESTBOUND)	2 LANE CLOSURE ALLOWED				NO 2 LANE CLOSURES ALLOWED																	2 LANE CLOSURE ALLOWED		
1 LANE CLOSURE (WESTBOUND)	1 LANE CLOSURE ALLOWED						NO LANE CLOSURE		1 LANE CLOSURE ALLOWED							NO LANE CLOSURE		1 LANE CLOSURE ALLOWED						

PEAK HOUR RESTRICTIONS, SATURDAY

IL 111 TO I-255	12:00 AM	1:00 AM	2:00 AM	3:00 AM	4:00 AM	5:00 AM	6:00 AM	7:00 AM	8:00 AM	9:00 AM	10:00 AM	11:00 AM	12:00 PM	1:00 PM	2:00 PM	3:00 PM	4:00 PM	5:00 PM	6:00 PM	7:00 PM	8:00 PM	9:00 PM	10:00 PM	11:00 PM
2 LANE CLOSURE (EASTBOUND)	2 LANE CLOSURE ALLOWED								NO 2 LANE CLOSURES ALLOWED													2 LANE CLOSURE ALLOWED		
1 LANE CLOSURE (EASTBOUND)	1 LANE CLOSURE ALLOWED														NO 1 LANE CLOSURES ALLOWED		1 LANE CLOSURE ALLOWED							
2 LANE CLOSURE (WESTBOUND)	2 LANE CLOSURE ALLOWED								NO 2 LANE CLOSURES ALLOWED													2 LANE CLOSURE ALLOWED		
1 LANE CLOSURE (WESTBOUND)	1 LANE CLOSURE ALLOWED						NO LANE CLOSURE		1 LANE CLOSURE ALLOWED							NO LANE CLOSURE		1 LANE CLOSURE ALLOWED						

PEAK HOUR RESTRICTIONS, SUNDAY

IL 111 TO I-255	12:00 AM	1:00 AM	2:00 AM	3:00 AM	4:00 AM	5:00 AM	6:00 AM	7:00 AM	8:00 AM	9:00 AM	10:00 AM	11:00 AM	12:00 PM	1:00 PM	2:00 PM	3:00 PM	4:00 PM	5:00 PM	6:00 PM	7:00 PM	8:00 PM	9:00 PM	10:00 PM	11:00 PM
2 LANE CLOSURE (EASTBOUND)	2 LANE CLOSURE ALLOWED									NO 2 LANE CLOSURES ALLOWED												2 LANE CLOSURE ALLOWED		
1 LANE CLOSURE (EASTBOUND)	1 LANE CLOSURE ALLOWED														NO 1 LANE CLOSURES ALLOWED		1 LANE CLOSURE ALLOWED							
2 LANE CLOSURE (WESTBOUND)	2 LANE CLOSURE ALLOWED									NO 2 LANE CLOSURES ALLOWED												2 LANE CLOSURE ALLOWED		
1 LANE CLOSURE (WESTBOUND)	1 LANE CLOSURE ALLOWED						NO LANE CLOSURE		1 LANE CLOSURE ALLOWED							NO LANE CLOSURE		1 LANE CLOSURE ALLOWED						

MODEL: Default
FILE NAME: 2:\17049 IDOT CMT I-270 Phase I\DGN\Design\Final\Platsheets\002-F8600917_sht_staging_PeakHour_Restrict.dgn

USER NAME = jdardeen	DESIGNED - JRD	REVISED -	
	DRAWN - JRD	REVISED -	
PLOT SCALE = 1200.0000 ' / in.	CHECKED - SLD	REVISED -	
PLOT DATE = 6/4/2024	DATE - 6/4/2024	REVISED -	

STATE OF ILLINOIS
DEPARTMENT OF TRANSPORTATION

MAINTENANCE OF TRAFFIC
PEAK HOUR RESTRICTIONS

SCALE: N/A | SHEET 2 OF 87 SHEETS | STA. | TO STA.

F.A.I. RTE.	SECTION	COUNTY	TOTAL SHEETS	SHEET NO.
270	60-3K-1	MADISON	576	68
		CONTRACT NO. 76818		
		ILLINOIS	FED. AID PROJECT	

MAINTENANCE OF TRAFFIC GENERAL NOTES

1. LANE CLOSURES ALONG I-270 ARE ONLY PERMITTED DURING OFF-PEAK HOURS AS SHOWN IN THE PEAK HOUR RESTRICTION TABLES.

2. ALL TRAFFIC CONTROL DEVICES USED ON THIS PROJECT SHALL BE NEW OR IN LIKE NEW CONDITION.

3. ALL TYPE II BARRICADES, DRUMS, AND VERTICAL PANELS SHALL BE EQUIPPED WITH MONO-DIRECTIONAL STEADY BURNING LIGHTS ON MULTILANE ROADWAYS.

4. ALL TYPE II BARRICADES, VERTICAL PANELS, AND DRUMS SHALL BE SPACED AT 50 FEET CENTER TO CENTER THROUGHOUT THE WORK ZONE, EXCEPT IN TAPER AREAS, GORE AREAS, AND ALONG CORNER RADII, WHERE THEY SHALL BE SPACED AT 25 FEET CENTER TO CENTER EXCEPT AS OTHERWISE INDICATED ON THE PLANS.

5. ALL CONSTRUCTION WARNING SIGN DIMENSIONS SHALL BE 48" X 48" UNLESS OTHERWISE SPECIFIED.

6. THE CONTRACTOR SHALL INSTALL AND COVER ALL TEMPORARY SIGNING BEFORE EXISTING SIGNS ARE REMOVED. THE CONTRACTOR SHALL RELOCATE EXISTING SIGNS AS INDICATED ON THE PLANS.

7. EXISTING TRAFFIC SIGNS IN CONFLICT WITH STAGING SHALL BE REMOVED, RELOCATED OR COVERED AS DIRECTED BY THE ENGINEER.

8. TEMPORARY CONCRETE BARRIER WALL SHALL BE CONTINUOUSLY PINNED TO THE PAVEMENT WHEREVER A 2 FOOT CLEAR ZONE (FREE OF DROP-OFFS, FIXED OBJECTS, OR OTHER OBSTACLES) CANNOT BE PROVIDED FOR BEHIND THE WALL.

9. ALL TRAFFIC CONTROL SHALL BE IN PLACE PRIOR TO THE START OF CONSTRUCTION. THE CONTRACTOR IS REQUIRED TO NOTIFY THE RESIDENT ENGINEER 72 HOURS IN ADVANCE OF THE PLACEMENT OF ANY TEMPORARY TRAFFIC CONTROL DEVICES.

10. THREE WEEKS PRIOR TO ANY LANE CLOSURE THE CONTRACTOR SHALL NOTIFY THE RESIDENT ENGINEER.

11. SIX CHANGEABLE MESSAGE BOARDS SHALL BE REQUIRED FOR THIS PROJECT. THEY SHALL BE PLACED TWO WEEKS PRIOR TO ANY LANE CLOSURE, SHALL REMAIN UP FOR THE DURATION OF THE PROJECT, AND SHALL BE PLACED AS SHOWN ON THE PLANS, HIGHWAY STANDARDS, OR AT THE DIRECTION OF THE ENGINEER. ALL MESSAGES SHOWN ON THE CMB SHALL BE APPROVED BY THE RESIDENT ENGINEER. TWO CHANGEABLE MESSAGE BOARDS SHALL BE PLACED ALONG IL ROUTE 111, I-270, CHAIN OF ROCKS ROAD, OR AT THE DIRECTION OF THE ENGINEER.

12. FLAGGER SHALL BE REQUIRED AT ALL TIMES WHEN WORKERS OR EQUIPMENT ARE ENCROACHING INTO THE LANE OF TRAFFIC.

13. THE CONTRACTOR SHALL BE RESPONSIBLE FOR MAINTAINING POSITIVE DRAINAGE INCLUDING STRUCTURES DURING ALL STAGES OF CONSTRUCTION.

14. THE CONTRACTOR SHALL FURNISH, INSTALL, MAINTAIN AND REMOVE TEMPORARY SIGNALS AT THE IL ROUTE 157 @ I-270 WB RAMP TERMINAL INTERSECTION DURING THE DURATION OF THE IL ROUTE 111 CLOSURE AS INDICATED IN THE SPECIAL PROVISIONS OR UNTIL THE ENGINEER DIRECTS THEM TO BE REMOVED.

15. THE CONTRACTOR MUST ADHERE TO PEAK HOUR RESTRICTIONS. THE MAINTENANCE OF TRAFFIC LAYOUTS SHOWN ALONG I-270 FOR PRESTAGE, STAGE 1, STAGE 1A, STAGE 1B, STAGE 1C, AND STAGE 1D ARE FOR OFF-PEAK HOURS OF TRAVEL ONLY. DURING STAGE 1A, STAGE 1B, STAGE 1C, AND STAGE 1D THE RAMPS SHALL REMAIN CLOSED TO TRAFFIC UNTIL ALL CONSTRUCTION OF THESE STAGES HAS BEEN COMPLETED.

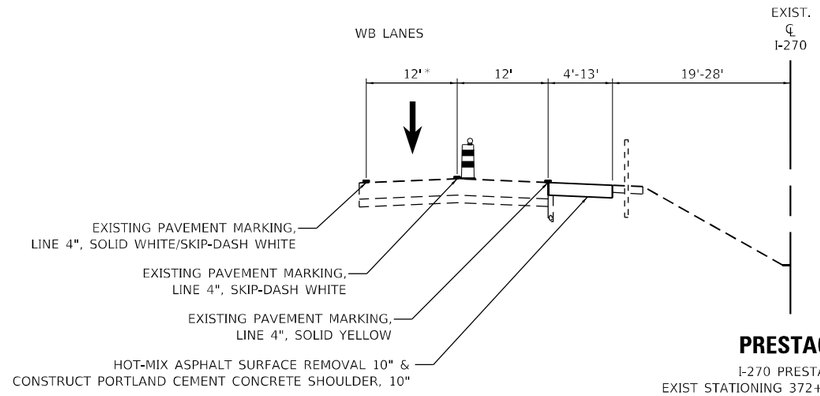

PRESTAGE

I-270 PRESTAGE
EXIST STATIONING 372+85 TO 399+99

* LANE CLOSURE ONLY PERMITTED DURING OFF-PEAK HOURS

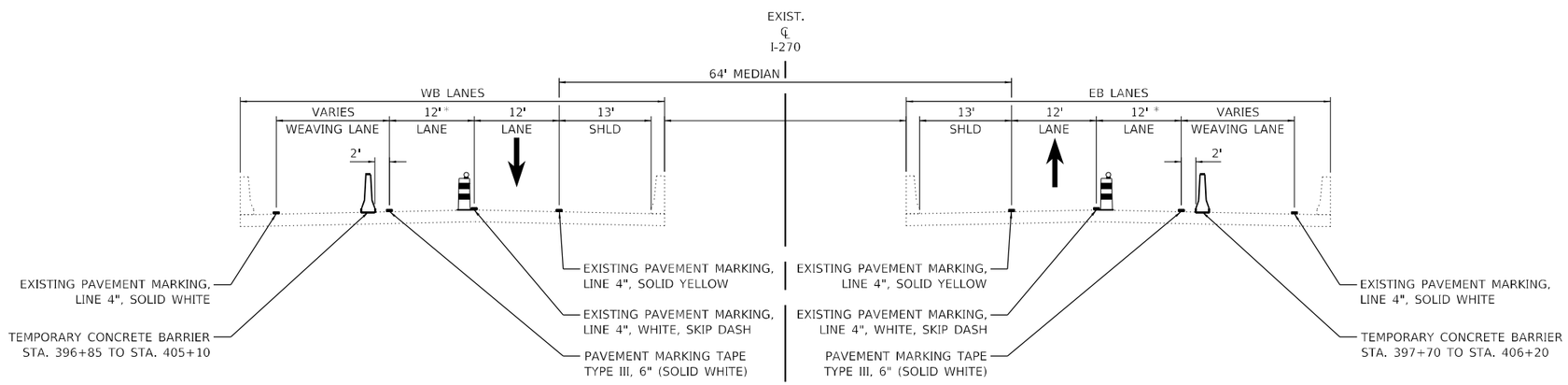

STAGE 1

I-270
I-270 OVER IL ROUTE 111
(LOOKING EAST)

* LANE CLOSURE ONLY PERMITTED DURING OFF-PEAK HOURS

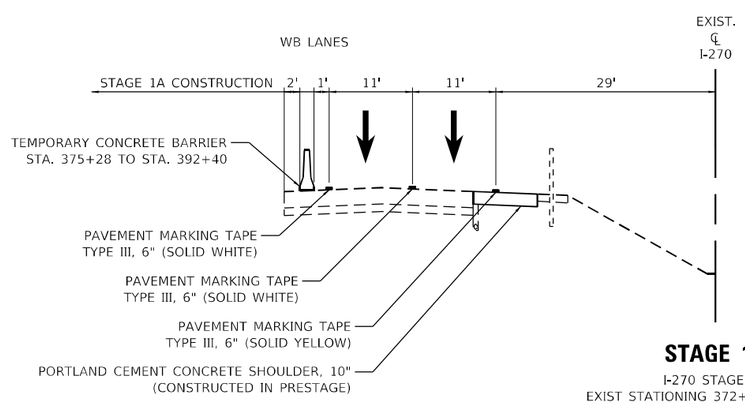

STAGE 1A

I-270 STAGE 1A
EXIST STATIONING 372+85 TO 398+75

MODEL: TYPICALS
FILE NAME: 2517049 IDOT CMT I-270 Phase II DGN\Design\Final\Roadways\004-007-4180097 4IM staging typicals.dgn

USER NAME = jdardeen	DESIGNED - JRD	REVISED -	STATE OF ILLINOIS DEPARTMENT OF TRANSPORTATION
	DRAWN - JRD	REVISED -	
PLOT SCALE = 20.0000 ' / in.	CHECKED - SLD	REVISED -	
PLOT DATE = 6/4/2024	DATE - 6/4/2024	REVISED -	

MAINTENANCE OF TRAFFIC
TYPICAL SECTIONS - F.A.I. 270 & F.A.P. 582

SCALE: N/A | SHEET 4 OF 87 SHEETS | STA. TO STA.

F.A.I. RTE.	SECTION	COUNTY	TOTAL SHEETS	SHEET NO.
270	60-3K-1	MADISON	576	70
		CONTRACT NO. 76818		
		ILLINOIS	FED. AID PROJECT	

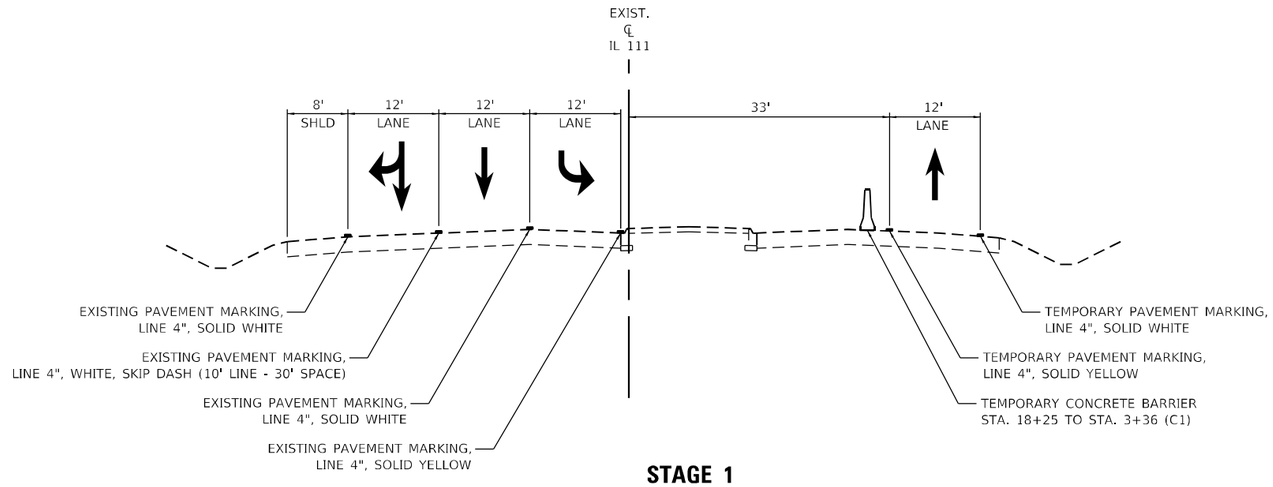

STAGE 1
IL ROUTE 111
17+27 TO 19+12
(LOOKING SOUTH)

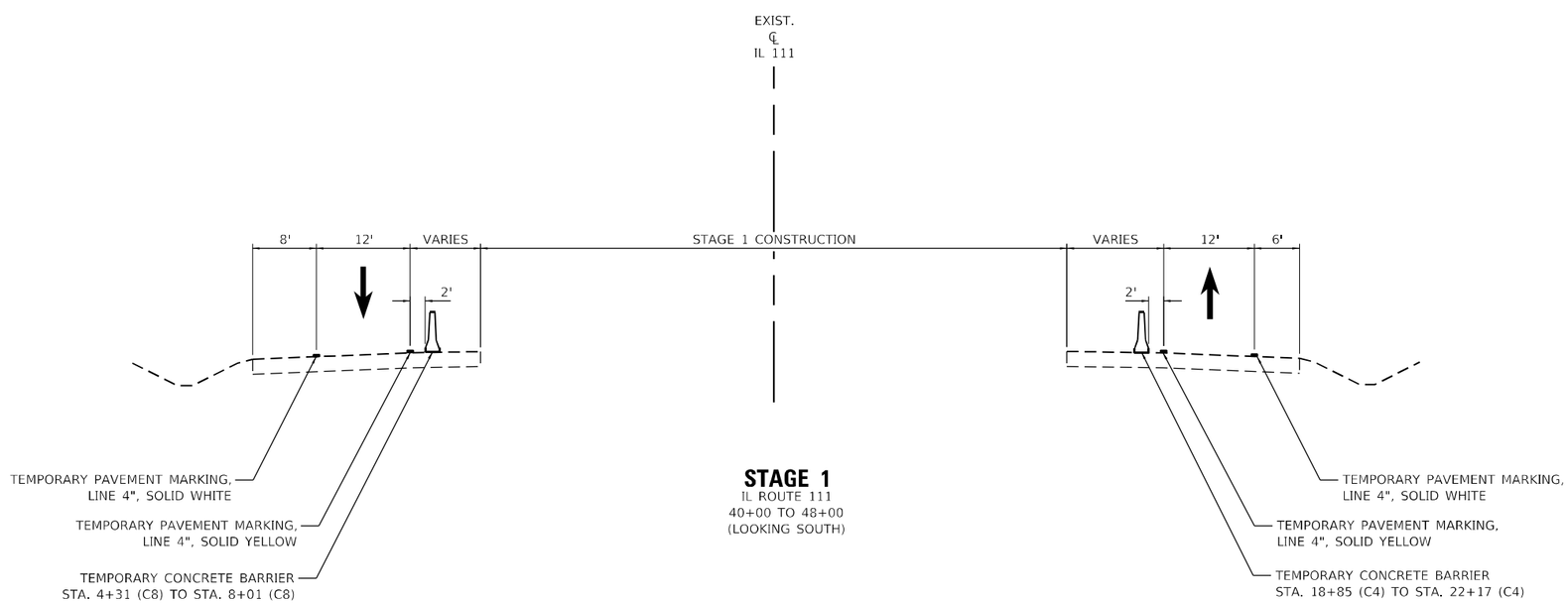

STAGE 1
IL ROUTE 111
40+00 TO 48+00
(LOOKING SOUTH)

MODEL: TYPICALS
FILE NAME: Z:\17049 IDOT CMT I-270 Phase I\DGN\Design\Final\Plots+eers\004-007-F8809 17_cmt_staging_typicals.dgn

USER NAME = jdardeen	DESIGNED - JRD	REVISED -	
	DRAWN - JRD	REVISED -	
PLOT SCALE = 20.0000 ' / in.	CHECKED - SLD	REVISED -	
PLOT DATE = 6/4/2024	DATE - 6/4/2024	REVISED -	

STATE OF ILLINOIS
DEPARTMENT OF TRANSPORTATION

MAINTENANCE OF TRAFFIC
TYPICAL SECTIONS - F.A.I. 270 & F.A.P. 582

SCALE: N/A | SHEET 5 OF 87 SHEETS | STA. TO STA.

F.A.I. RTE.	SECTION	COUNTY	TOTAL SHEETS	SHEET NO.
270	60-3K-1	MADISON	576	71
		CONTRACT NO. 76818		
		ILLINOIS	FED. AID PROJECT	

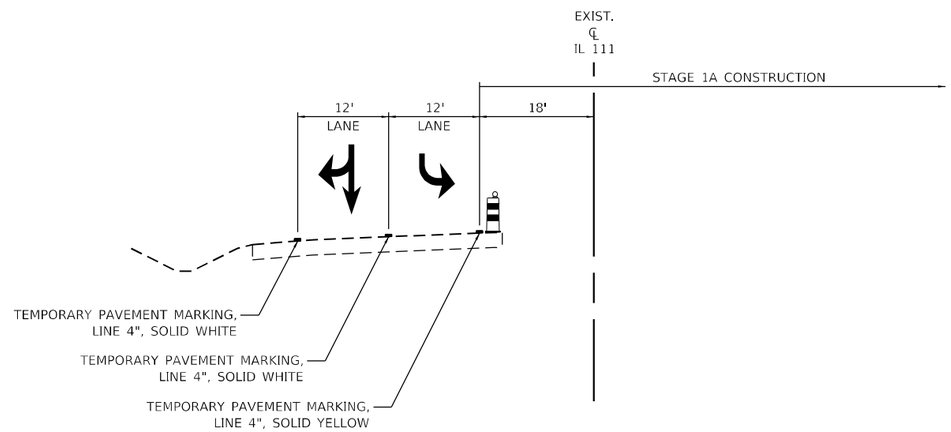

STAGE 1A
IL ROUTE 111
17+30 TO 19+50
(LOOKING SOUTH)

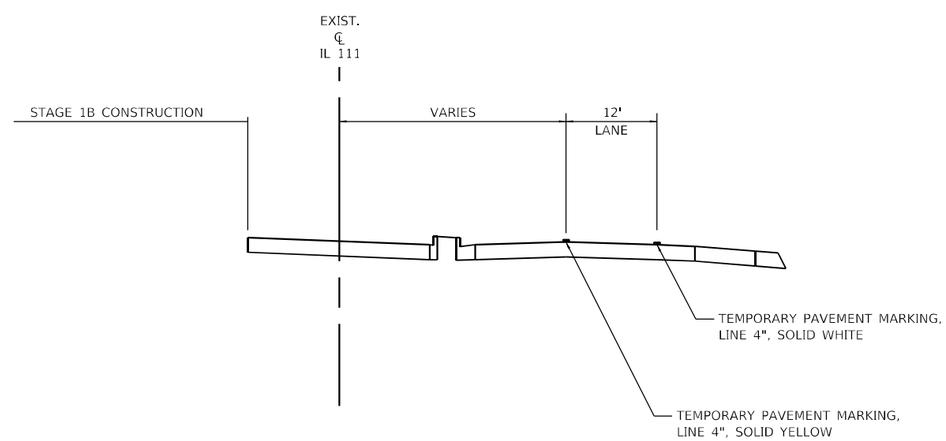

STAGE 1B
IL ROUTE 111
20+17 TO 22+84
(LOOKING SOUTH)

MODEL: TYPICALS
FILE NAME: 22170-49 IDOT CMT I-270 Phase II DGN\Design\Final\Plots+eers\004-007-F8809117_cmt_staging_typicals.dgn

USER NAME = jdardeen	DESIGNED - JRD	REVISED -	**STATE OF ILLINOIS DEPARTMENT OF TRANSPORTATION**
	DRAWN - JRD	REVISED -	
PLOT SCALE = 20.0000 ' / in.	CHECKED - SLD	REVISED -	
PLOT DATE = 6/4/2024	DATE - 6/4/2024	REVISED -	

MAINTENANCE OF TRAFFIC
TYPICAL SECTIONS - F.A.I. 270 & F.A.P. 582

SCALE: N/A | SHEET 6 OF 87 SHEETS | STA. TO STA.

F.A.I. RTE.	SECTION	COUNTY	TOTAL SHEETS	SHEET NO.
270	60-3K-1	MADISON	576	72
		CONTRACT NO. 76818		
		ILLINOIS	FED. AID PROJECT	

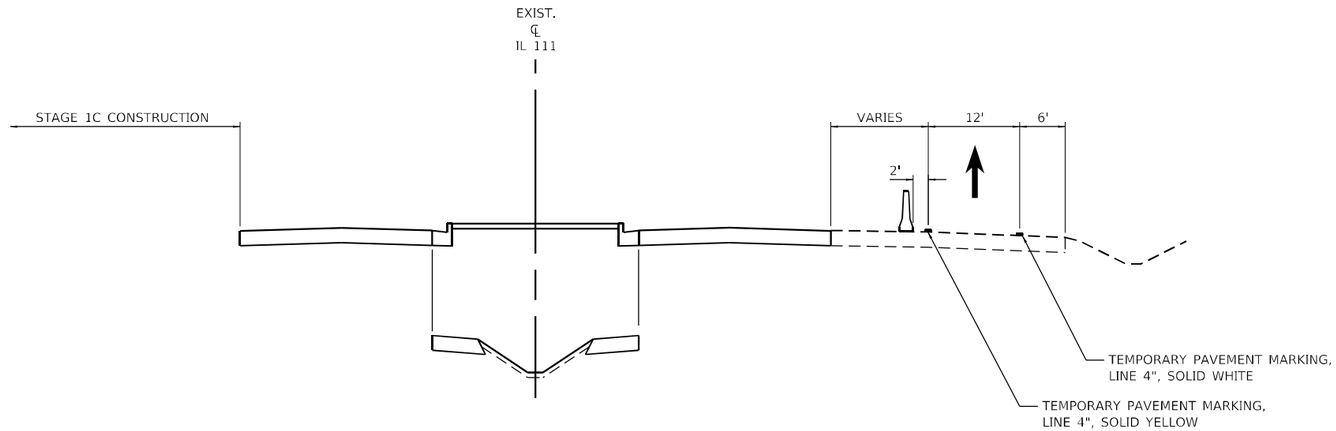

STAGE 1C
IL ROUTE 111
39+38 TO 48+00
(LOOKING SOUTH)

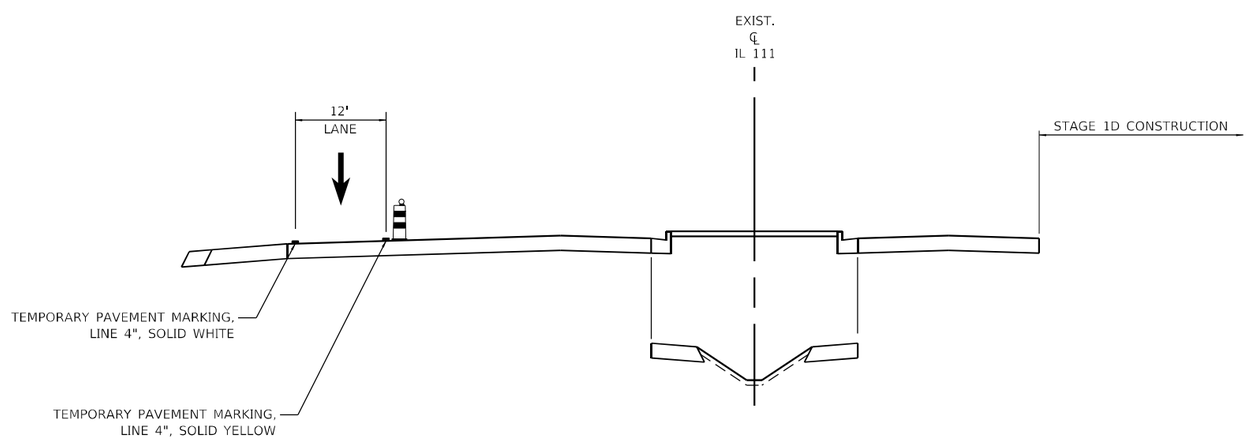

STAGE 1D
IL ROUTE 111
39+69 TO 48+00
(LOOKING SOUTH)

MODEL: TYPICALS
FILE NAME: Z:\17049 IDOT CMT I-270 Phase I\DGN\Design\Final\Plots+eers\004-007-F8809177_cmt_staging_typicals.dgn

USER NAME = jdardeen	DESIGNED - JRD	REVISED -	
	DRAWN - JRD	REVISED -	
PLOT SCALE = 20.0000 ' / in.	CHECKED - SLD	REVISED -	
PLOT DATE = 6/4/2024	DATE - 6/4/2024	REVISED -	

STATE OF ILLINOIS
DEPARTMENT OF TRANSPORTATION

MAINTENANCE OF TRAFFIC
TYPICAL SECTIONS - F.A.I. 270 & F.A.P. 582

SCALE: N/A | SHEET 7 OF 87 SHEETS | STA. TO STA.

F.A.I. RTE.	SECTION	COUNTY	TOTAL SHEETS	SHEET NO.
270	60-3K-1	MADISON	576	73
		CONTRACT NO. 76818		
		ILLINOIS	FED. AID PROJECT	

NOTES:

1. PRIOR TO INSTALLING GROUND MOUNTED SIGNS, THE CONTRACTOR SHALL CONTACT J.U.L.I.E.
2. ALL SIGNAGE SHALL BE SUPPLIED BY THE CONTRACTOR.
3. ANY IDOT SIGN THAT IS COVERED OR CHANGED SHALL BE DONE IN A MANNER WHICH DOES NOT DAMAGE ANY SIGNS OR POSTS. ANY SIGN OR POST WHICH THE ENGINEER DETERMINES HAS BEEN DAMAGED BY THE CONTRACTOR SHALL BE REPAIRED OR REPLACED AT THE CONTRACTOR'S OWN EXPENSE.
4. SPACING BETWEEN SIGNS SHOWN ON THIS DETAIL SHALL BE APPROXIMATELY 1 MILE OR AS DIRECTED BY THE ENGINEER.
5. SEE ADVANCED SIGNING DETAILS, DETOUR ROUTE DETAILS, ALTERNATE ROUTE DETAILS, AND STAGING CONSTRUCTION SHEETS FOR ADDITIONAL SIGNING.

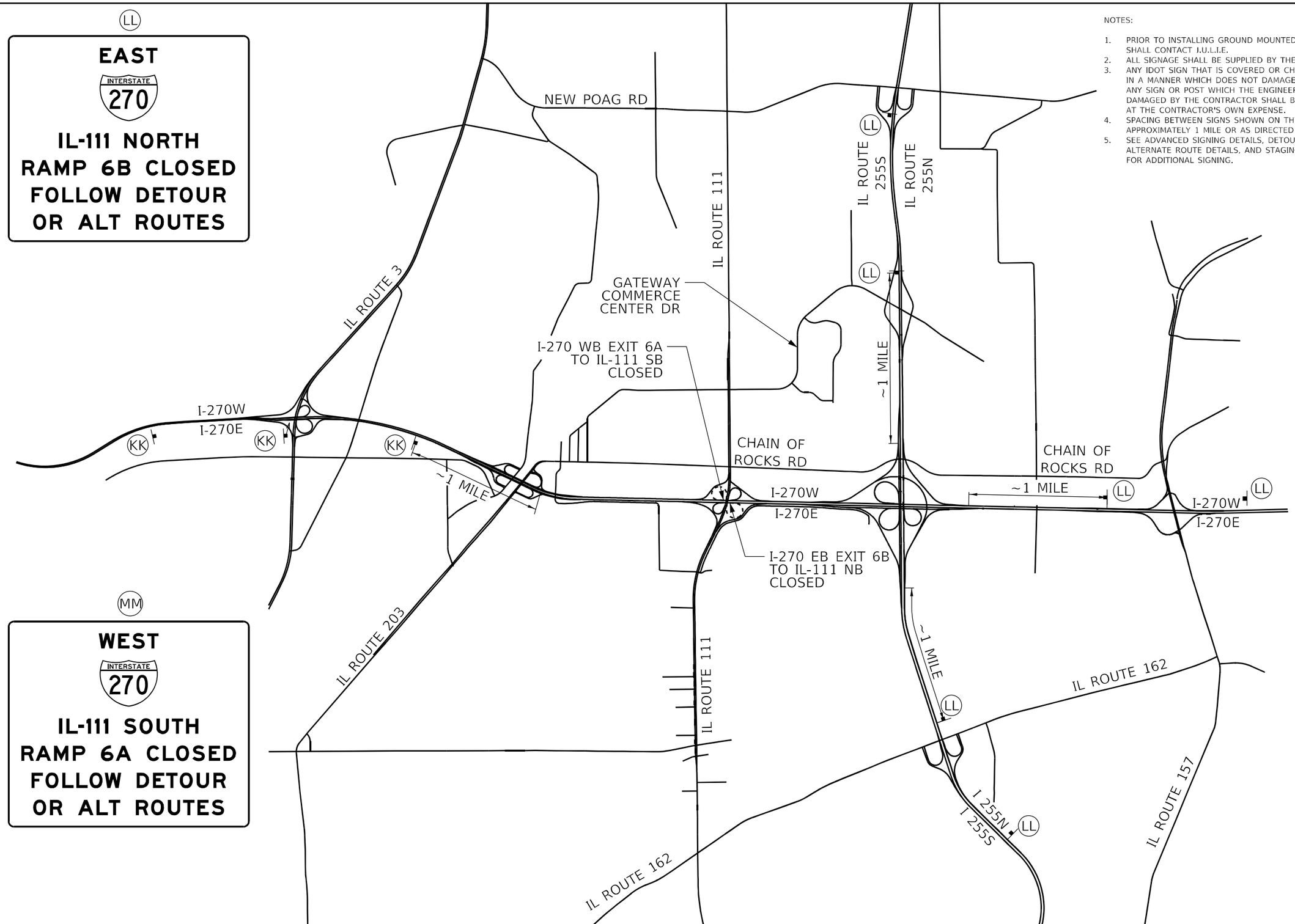

USER NAME = jdardeen	DESIGNED - KHEO	REVISED -	
	DRAWN - KHEO	REVISED -	
PLOT SCALE = 3500.0000 ' / in.	CHECKED - SLD	REVISED -	
PLOT DATE = 6/4/2024	DATE - 6/4/2024	REVISED -	

STATE OF ILLINOIS
DEPARTMENT OF TRANSPORTATION

MAINTENANCE OF TRAFFIC
I-270 EXIT CLOSURES ADVANCED SIGNAGE DETAIL

SCALE: N.T.S. | SHEET 8 OF 87 SHEETS | STA. | TO STA.

F.A.I. RTE.	SECTION	COUNTY	TOTAL SHEETS	SHEET NO.
270	60-3K-1	MADISON	576	74
		CONTRACT NO. 76818		
		ILLINOIS	FED. AID PROJECT	

MODEL: Default
FILE NAME: Z:\17049 IDOT C4Y I-270 Phase I\DGN\Design\Final\Plots\sheets\008-P80091 7_4N_staging_detail-Advsigns01.dgn

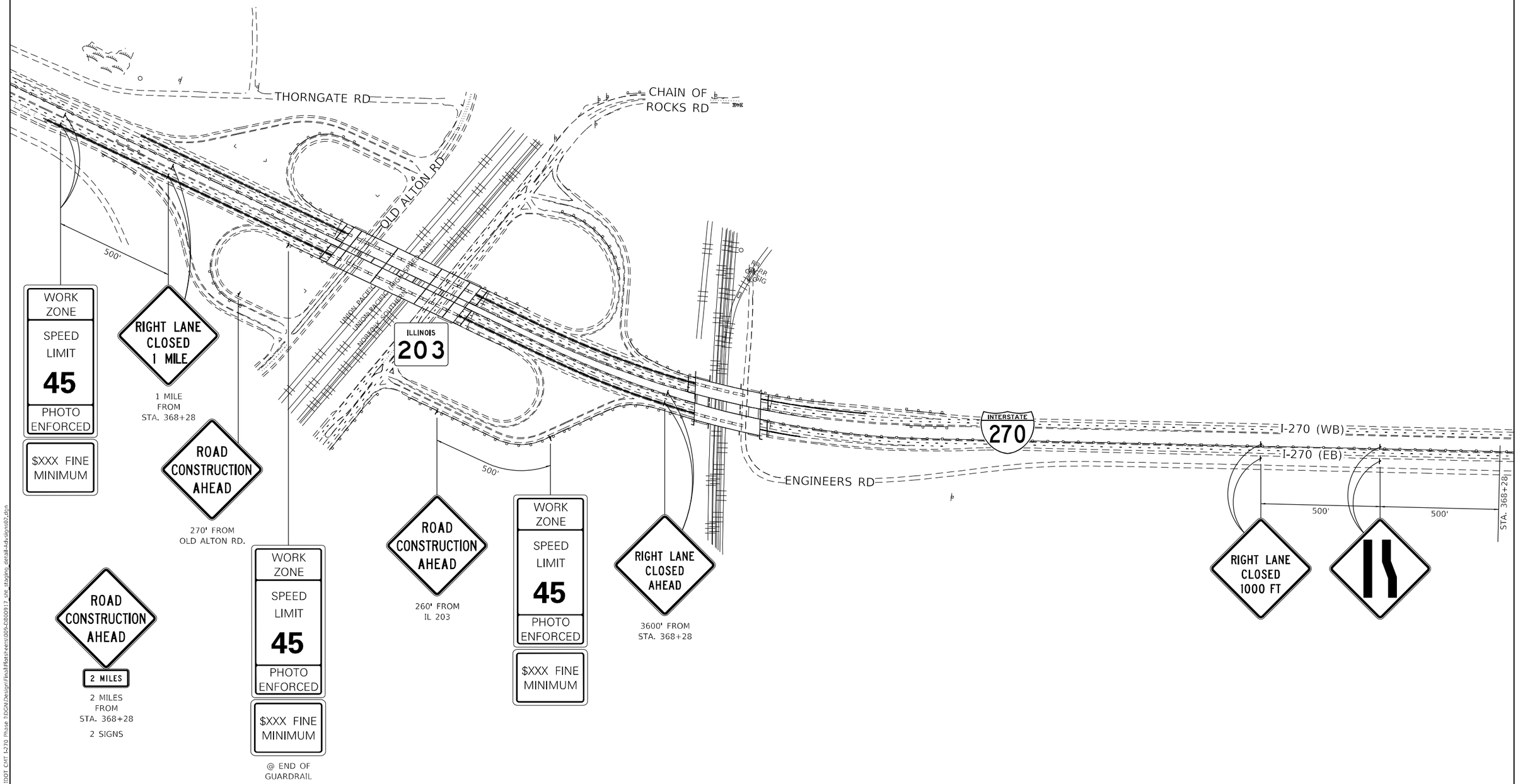

MODEL: TYPICALS
FILE NAME: Z:\17049 IDOT CMT I-270 Phase I\DGN\Design\Final\Plots+ecrs\005-I360017_stk_staging_detail-4lx-signs02.dgn

USER NAME = jfardeen	DESIGNED - JRD	REVISED -	
	DRAWN - JRD	REVISED -	
PLOT SCALE = 400.0000 ' / in.	CHECKED - SLD	REVISED -	
PLOT DATE = 6/4/2024	DATE - 6/4/2024	REVISED -	

STATE OF ILLINOIS
DEPARTMENT OF TRANSPORTATION

MAINTENANCE OF TRAFFIC
I-270 ADVANCED SIGNING DETAIL

SCALE:N.T.S. | SHEET 9 OF 87 SHEETS | STA. | TO STA.

F.A.I. RTE.	SECTION	COUNTY	TOTAL SHEETS	SHEET NO.
270	60-3K-1	MADISON	576	75
		CONTRACT NO. 76818		
		ILLINOIS	FED. AID PROJECT	

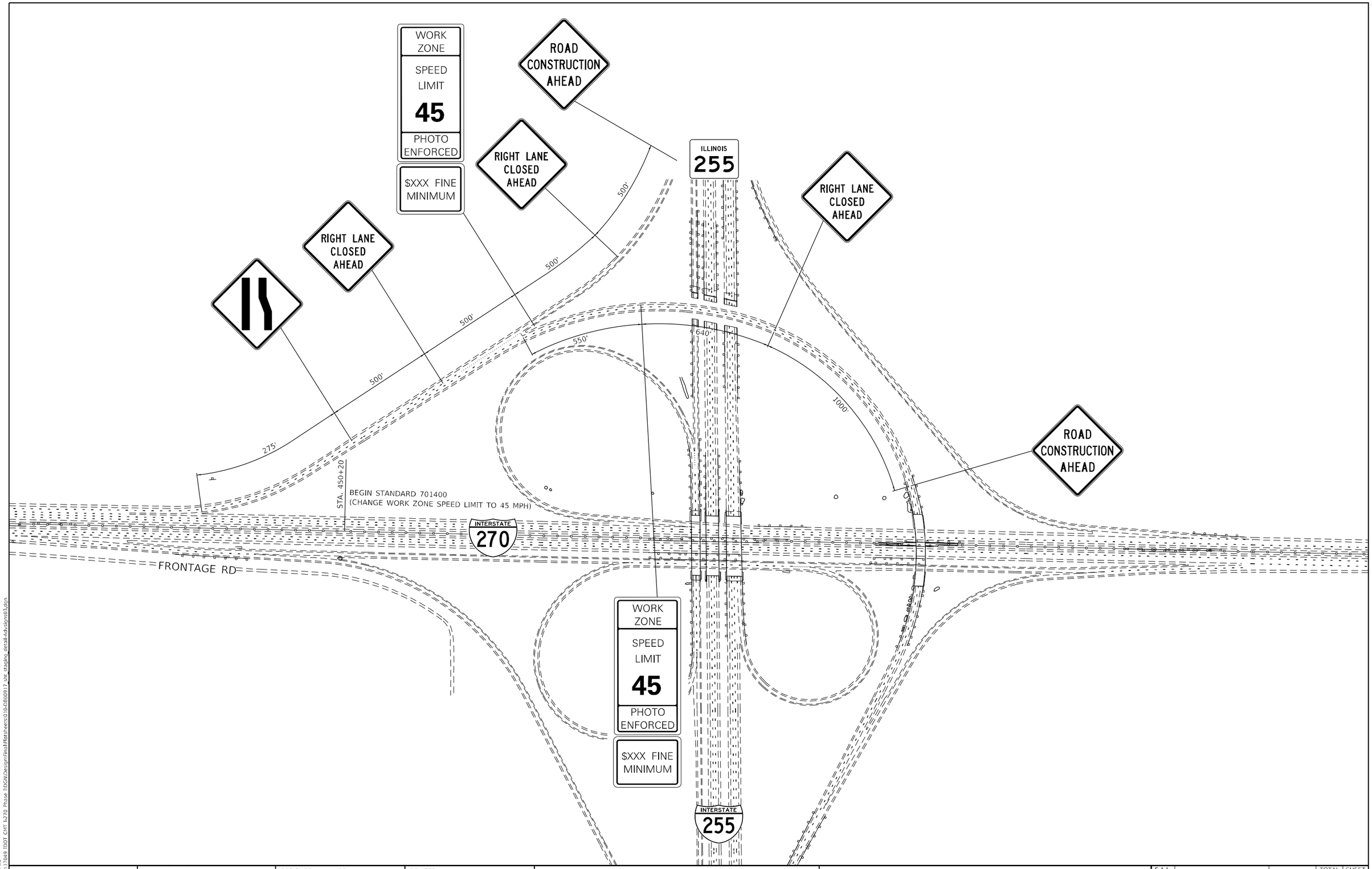

MODEL: TYPICALS
FILE NAME: 2:\17049 IDOT CMT I-270 Phase 1\DGN\Design\Final\Plots\Peers\010-0800917_ent_staging_detail-44x-sign03.dgn

USER NAME = jdardeen	DESIGNED - JRD	REVISED -	
	DRAWN - JRD	REVISED -	
PLOT SCALE = 400.0000 ' / in.	CHECKED - SLD	REVISED -	
PLOT DATE = 6/4/2024	DATE - 6/4/2024	REVISED -	

STATE OF ILLINOIS
DEPARTMENT OF TRANSPORTATION

MAINTENANCE OF TRAFFIC
I-270 ADVANCED SIGNING DETAIL

SCALE: N.T.S. | SHEET 10 OF 87 SHEETS | STA. TO STA.

F.A.I. RTE.	SECTION	COUNTY	TOTAL SHEETS	SHEET NO.
270	60-3K-1	MADISON	576	76
		CONTRACT NO. 76818		
		ILLINOIS	FED. AID PROJECT	

ADVANCED SIGNING ALONG IL ROUTE 111 (SOUTHBOUND)

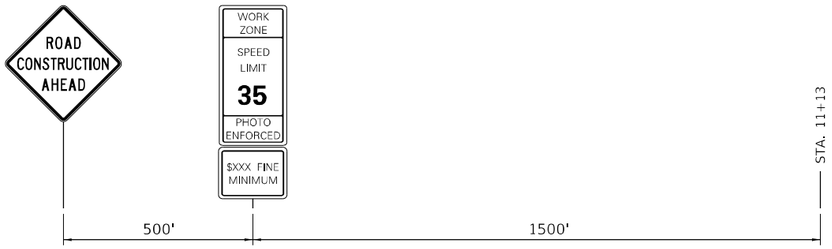

NOTES:
1. WHEN NECESSARY, COVER SIGNS IN CONFLICT WITH THE TRAFFIC PATTERNS SHOWN ON THE STAGING SHEETS.
2. ALL ADVANCED WARNING SIGNS SHALL BE PLACED ON EITHER SIDE OF SOUTHBOUND IL ROUTE 111.

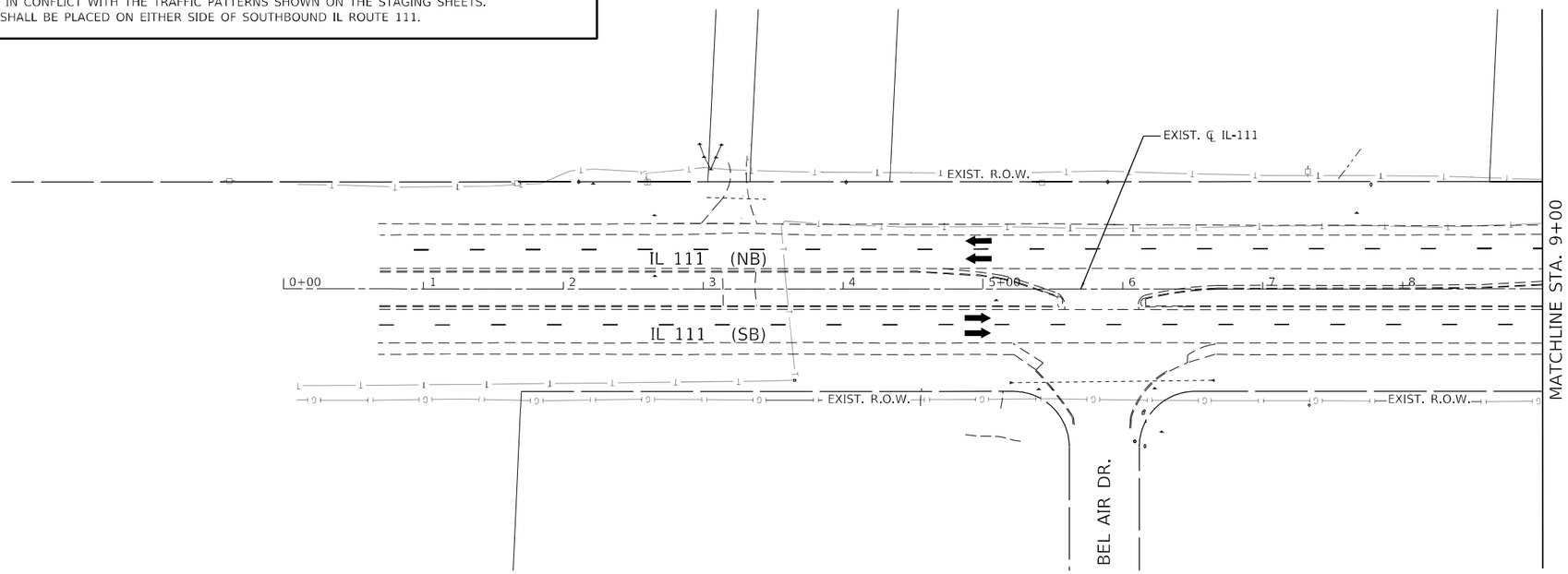

LEGEND

- DIRECTION OF TRAFFIC
- TYPE II BARRICADES, DRUMS, OR VERTICAL PANEL POST
- TYPE III BARRICADE
- TEMPORARY CONCRETE BARRIER
- IMPACT ATTENUATOR, TEMPORARY (SEVERE USE, NARROW), TEST LEVEL 3
- TEMPORARY PAVEMENT
- WORK ZONE

50' 0 50' 100'
SCALE: 1" = 50'

MODEL: 50 Scale Clipping Shape
FILE NAME: 7:\7049 IDOT CMT I-270 Phase 1\DGN\Design\Final\Mainteners\011-F800917_zone_staging-PreSTG_111-001.dgn

USER NAME = jdardeen	DESIGNED - JRD	REVISED -	
	DRAWN - JRD	REVISED -	
PLOT SCALE = 100.0000 ' / in.	CHECKED - SLD	REVISED -	
PLOT DATE = 6/4/2024	DATE - 6/4/2024	REVISED -	

STATE OF ILLINOIS
DEPARTMENT OF TRANSPORTATION

MAINTENANCE OF TRAFFIC - PRESTAGE
F.A.P. 582 (IL 111)

SCALE: 1" = 50' | SHEET 11 OF 87 SHEETS | STA. 0+00 TO STA. 9+00

F.A.I. RTE.	SECTION	COUNTY	TOTAL SHEETS	SHEET NO.
270	60-3K-1	MADISON	576	77
		CONTRACT NO. 76818		
		ILLINOIS	FED. AID PROJECT	

ADVANCED SIGNING ALONG CHAIN OF ROCKS RD (WESTBOUND)

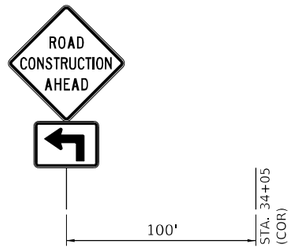

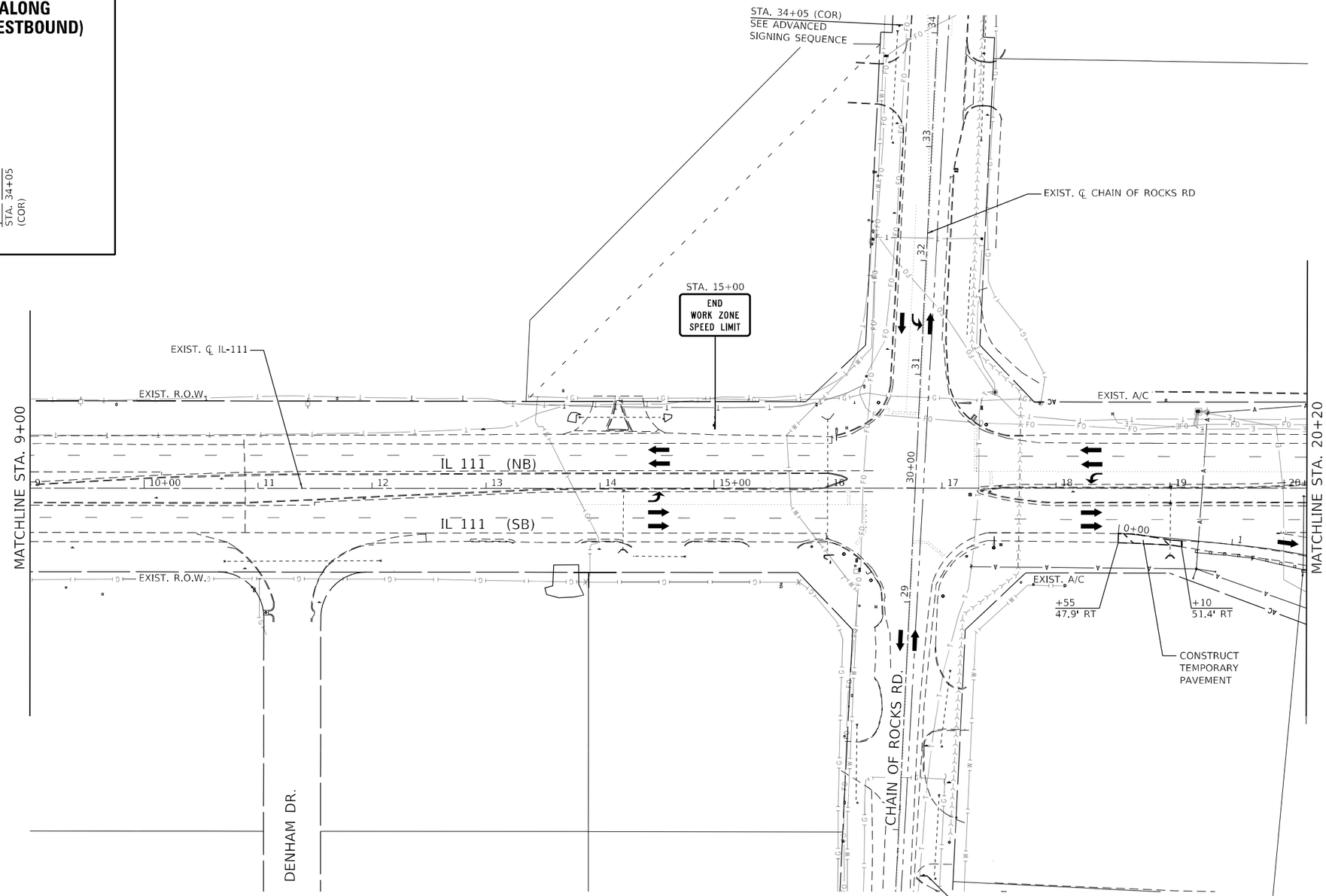

EX. OVERHEAD SIGNS ON TRUSS

LEGEND

- DIRECTION OF TRAFFIC
- TYPE II BARRICADES, DRUMS, OR VERTICAL PANEL POST
- TYPE III BARRICADE
- TEMPORARY CONCRETE BARRIER
- IMPACT ATTENUATOR, TEMPORARY (SEVERE USE, NARROW), TEST LEVEL 3
- TEMPORARY PAVEMENT
- WORK ZONE

50' 0 50' 100'
SCALE: 1" = 50'

MODEL: 50 Scale Clipping Shape
FILE NAME: Z:\17049 IDOT CMT I-270 Phase II\DGN\Design\Final\Roots\Sheets\012-580917_MOT_Staging-PreSTG_111-002.dgn

USER NAME = jdardeen	DESIGNED - JRD	REVISED -	
	DRAWN - JRD	REVISED -	
PLOT SCALE = 100.0000 ' / in.	CHECKED - SLD	REVISED -	
PLOT DATE = 6/4/2024	DATE - 6/4/2024	REVISED -	

STATE OF ILLINOIS
DEPARTMENT OF TRANSPORTATION

MAINTENANCE OF TRAFFIC - PRESTAGE
F.A.P. 582 (IL 111)

SCALE: 1" = 50' | SHEET 12 OF 87 SHEETS | STA. 9+00 TO STA. 20+20

F.A.I. RTE.	SECTION	COUNTY	TOTAL SHEETS	SHEET NO.
270	60-3K-1	MADISON	576	78
		CONTRACT NO. 76818		
		ILLINOIS	FED. AID PROJECT	

EXIST. ℄ RAMP C5

EXIST. ℄ F.A.I.270 (I-270)

EXIST. A/C

RAMP C5

I-270 (WB)

I-270 (EB)

EXIST. ℄ IL-111

+84 (C5)
7.0' RT

CONSTRUCT
TEMPORARY PAVEMENT

+57
46.1' LT

IL 111 (NB)

IL 111 (SB)

MATCHLINE STA. 20+20

MATCHLINE STA. 30+00

EXIST. A/C

INTERSTATE 270 EAST
Effingham

EX. BRIDGE MOUNT SIGN

EXIST. ℄ RAMP C1

RAMP C1

LEGEND

- DIRECTION OF TRAFFIC
- TYPE II BARRICADES, DRUMS, OR VERTICAL PANEL POST
- TYPE III BARRICADE
- TEMPORARY CONCRETE BARRIER
- IMPACT ATTENUATOR, TEMPORARY (SEVERE USE, NARROW), TEST LEVEL 3
- TEMPORARY PAVEMENT
- WORK ZONE

50' 0 50' 100'
SCALE: 1" = 50'

MODEL: 50 Scale Clipping Shape
FILE NAME: Z:\17049 IDOT CMT I-270 Phase II\DGN\Design\Final\Plots\Sheets\013-080097 JPK staging-PreSTG_111-003.dgn

USER NAME = jdardeen	DESIGNED - JRD	REVISED -	
	DRAWN - JRD	REVISED -	
PLOT SCALE = 100.0000 ' / in.	CHECKED - SLD	REVISED -	
PLOT DATE = 6/4/2024	DATE - 6/4/2024	REVISED -	

STATE OF ILLINOIS
DEPARTMENT OF TRANSPORTATION

MAINTENANCE OF TRAFFIC - PRESTAGE
F.A.P. 582 (IL 111)

SCALE: 1" = 50' | SHEET 13 OF 87 SHEETS | STA. 20+20 TO STA. 30+00

F.A.I. RTE.	SECTION	COUNTY	TOTAL SHEETS	SHEET NO.
270	60-3K-1	MADISON	576	79
		CONTRACT NO. 76818		
	ILLINOIS	FED. AID PROJECT		

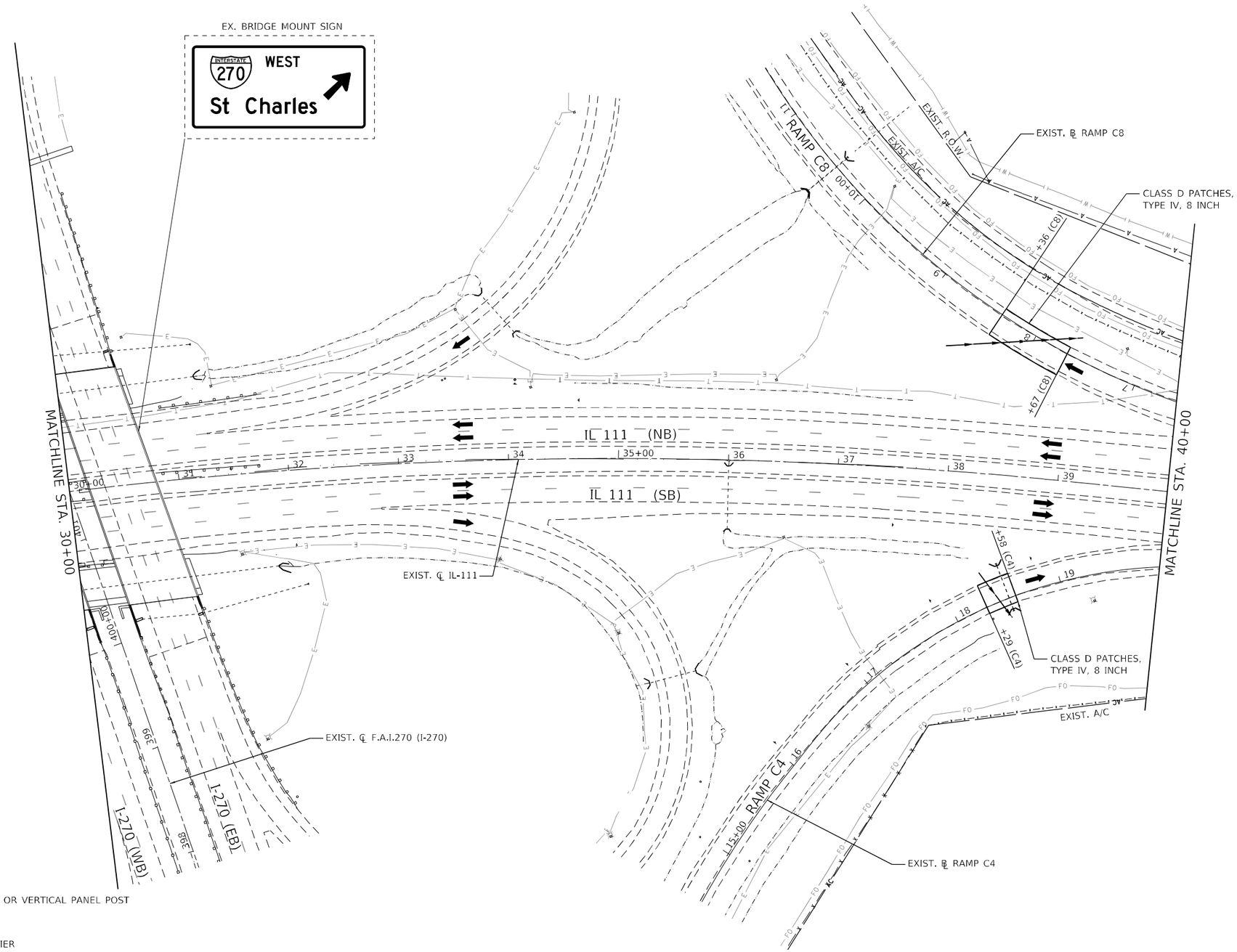

LEGEND

- DIRECTION OF TRAFFIC
- TYPE II BARRICADES, DRUMS, OR VERTICAL PANEL POST
- TYPE III BARRICADE
- TEMPORARY CONCRETE BARRIER
- IMPACT ATTENUATOR, TEMPORARY (SEVERE USE, NARROW), TEST LEVEL 3
- TEMPORARY PAVEMENT
- WORK ZONE

50' 0 50' 100'
SCALE: 1" = 50'

MODEL: 50 Scale Clipping Shape
FILE NAME: 7:\17049 IDOT CMT I-270 Phase 1\DGN\Design\Final\Mainteners\014-P880917_zone_staging-PreSTG_111-004.dgn

USER NAME = jdardeen	DESIGNED - JRD	REVISED -	
	DRAWN - JRD	REVISED -	
PLOT SCALE = 100.0000 ' / in.	CHECKED - SLD	REVISED -	
PLOT DATE = 6/4/2024	DATE - 6/4/2024	REVISED -	

STATE OF ILLINOIS
DEPARTMENT OF TRANSPORTATION

MAINTENANCE OF TRAFFIC - PRESTAGE
F.A.P. 582 (IL 111)

SCALE: 1" = 50' | SHEET 14 OF 87 SHEETS | STA. 30+00 TO STA. 40+00

F.A.I. RTE.	SECTION	COUNTY	TOTAL SHEETS	SHEET NO.
270	60-3K-1	MADISON	576	80
		CONTRACT NO. 76818		
		ILLINOIS	FED. AID PROJECT	

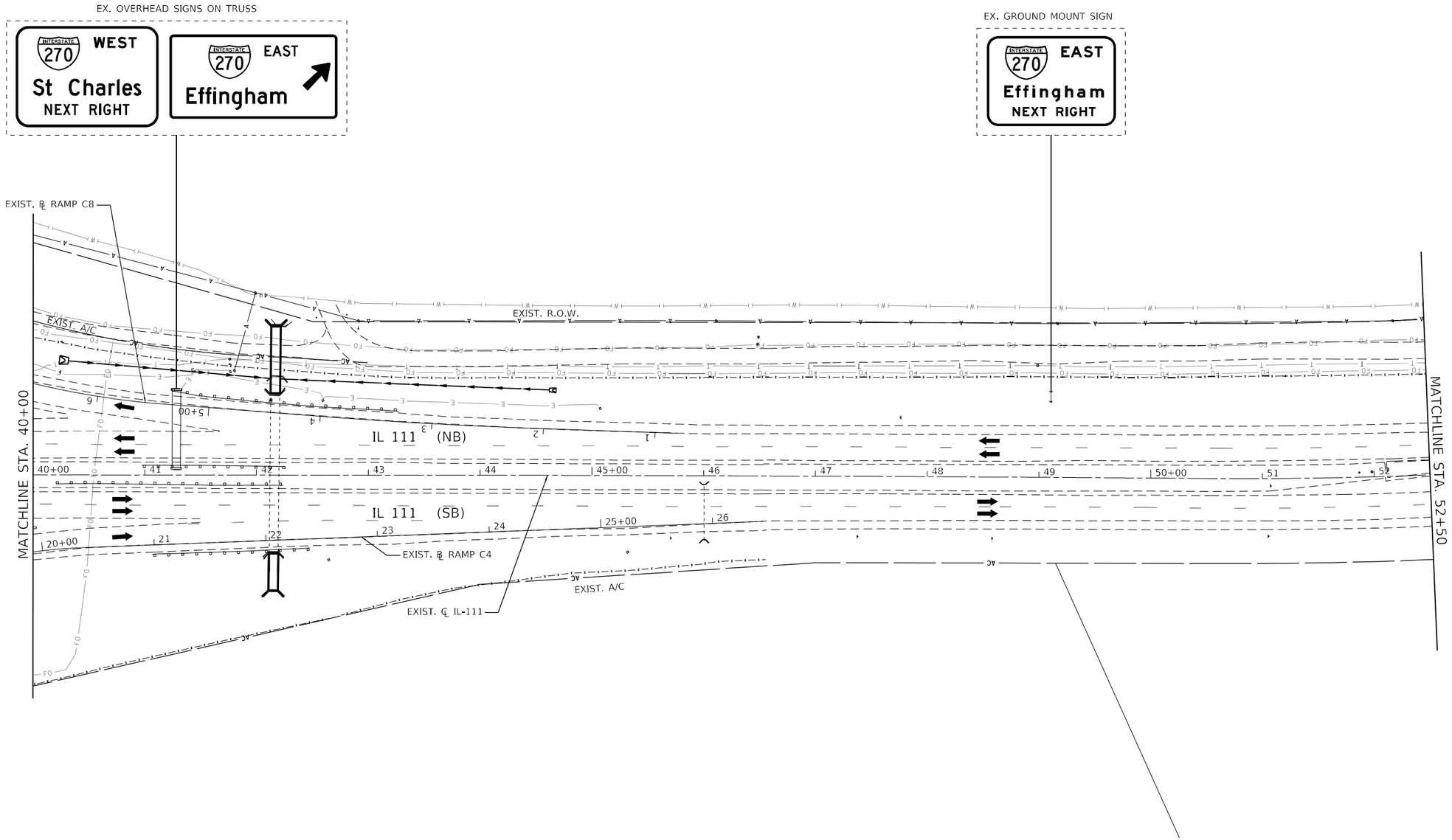

LEGEND

- DIRECTION OF TRAFFIC
- TYPE II BARRICADES, DRUMS, OR VERTICAL PANEL POST
- TYPE III BARRICADE
- TEMPORARY CONCRETE BARRIER
- IMPACT ATTENUATOR, TEMPORARY (SEVERE USE, NARROW), TEST LEVEL 3
- TEMPORARY PAVEMENT
- WORK ZONE

50' 0 50' 100'
SCALE: 1" = 50'

MODEL: 50 Scale Clipping Shape
FILE NAME: Z:\17049 IDOT CMT I-270 Phase I\DGN\Design Files\Matchlines\015-0200917_gm_staging-PreSTC_I111-005.dgn

USER NAME = jdardeen	DESIGNED - JRD	REVISED -	
	DRAWN - JRD	REVISED -	
PLOT SCALE = 100.0000 ' / in.	CHECKED - SLD	REVISED -	
PLOT DATE = 6/4/2024	DATE - 6/4/2024	REVISED -	

STATE OF ILLINOIS
DEPARTMENT OF TRANSPORTATION

MAINTENANCE OF TRAFFIC - PRESTAGE
F.A.P. 582 (IL 111)

SCALE: 1" = 50' | SHEET 15 OF 87 SHEETS | STA. 40+00 TO STA. 52+50

F.A.I. RTE.	SECTION	COUNTY	TOTAL SHEETS	SHEET NO.
270	60-3K-1	MADISON	576	81
		CONTRACT NO. 76818		
		ILLINOIS	FED. AID PROJECT	

ADVANCED SIGNING ALONG IL ROUTE 111 (NORTHBOUND)

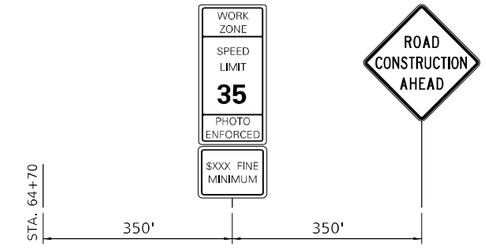

NOTES:
1. WHEN NECESSARY, COVER SIGNS IN CONFLICT WITH THE TRAFFIC PATTERNS SHOWN ON THE STAGING SHEETS.
2. ALL ADVANCED WARNING SIGNS SHALL BE PLACED ON EITHER SIDE OF NORTHBOUND IL ROUTE 111.

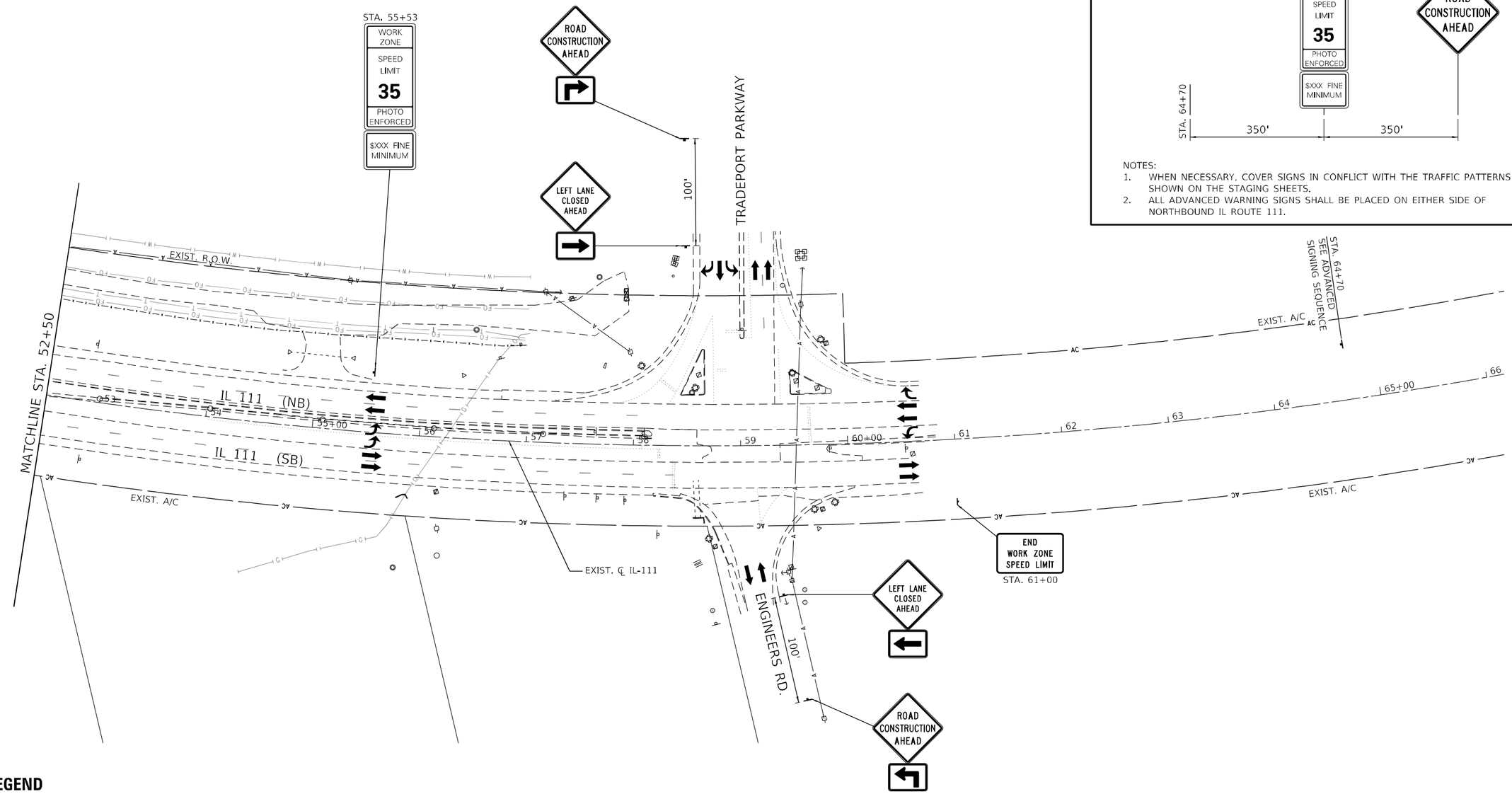

LEGEND

- DIRECTION OF TRAFFIC
- TYPE II BARRICADES, DRUMS, OR VERTICAL PANEL POST
- TYPE III BARRICADE
- TEMPORARY CONCRETE BARRIER
- IMPACT ATTENUATOR, TEMPORARY (SEVERE USE, NARROW), TEST LEVEL 3
- TEMPORARY PAVEMENT
- WORK ZONE

N

50' 0 50' 100'
SCALE: 1" = 50'

MODEL: 50 Scale Clipping Shape
FILE NAME: 221049 IDOT CMT I-270 Phase 1 DGN\Design\Final\Plotsheets\016-D800917_ONE_staging-PreSTG_111-006.dgn

USER NAME = jdardeen	DESIGNED - JRD	REVISED -	
	DRAWN - JRD	REVISED -	
PLOT SCALE = 100.0000 ' / in.	CHECKED - SLD	REVISED -	
PLOT DATE = 6/4/2024	DATE - 6/4/2024	REVISED -	

STATE OF ILLINOIS
DEPARTMENT OF TRANSPORTATION

MAINTENANCE OF TRAFFIC - PRESTAGE
F.A.P. 582 (IL 111)

SCALE: 1" = 50' | SHEET 16 OF 87 SHEETS | STA. 52+50 TO STA. 66+00

F.A.I. RTE.	SECTION	COUNTY	TOTAL SHEETS	SHEET NO.
270	60-3K-1	MADISON	576	82
		CONTRACT NO. 76818		
		ILLINOIS	FED. AID PROJECT	

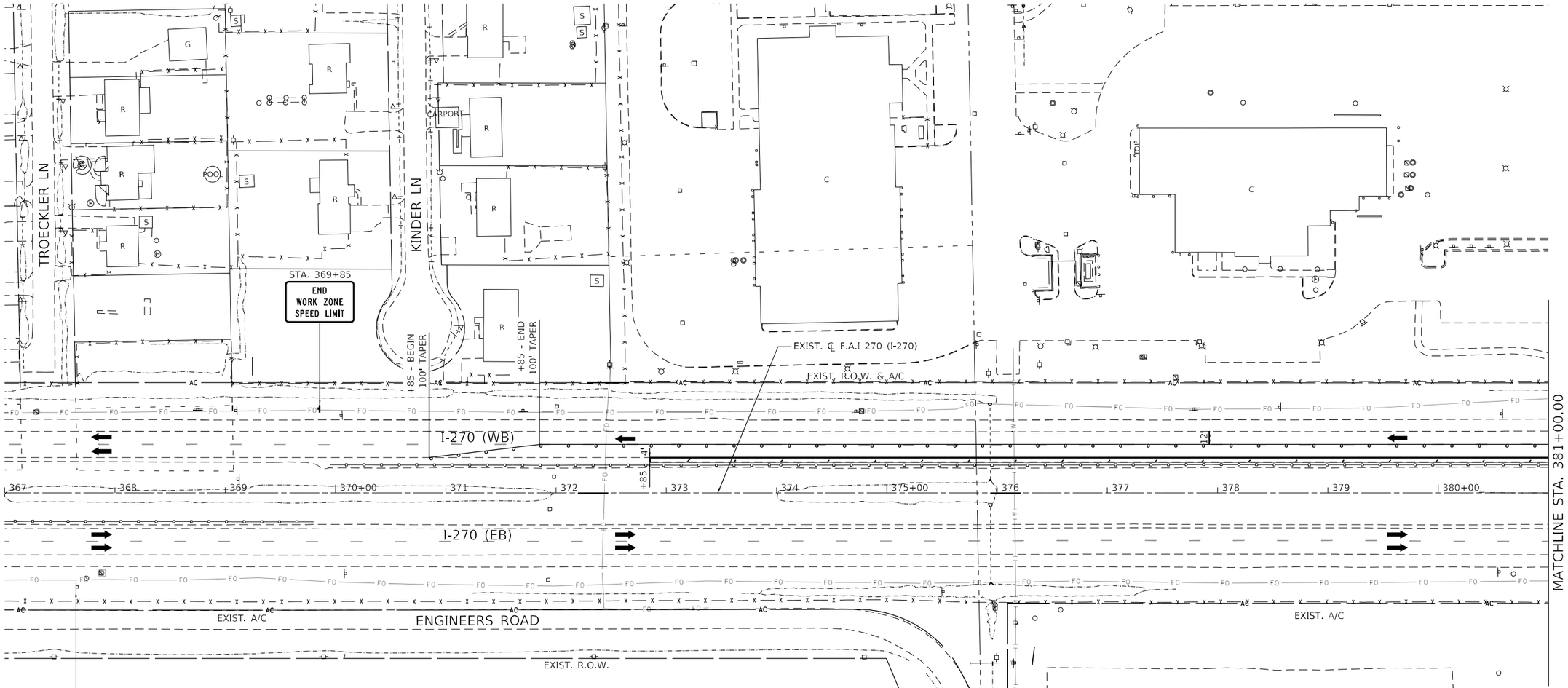

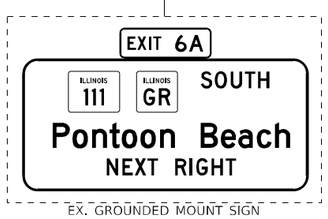

EX. GROUNDED MOUNT SIGN

EX. OVERHEAD SIGNS ON TRUSS LOCATED EAST OF BRIDGE OVER IL ROUTE 203

LEGEND

- DIRECTION OF TRAFFIC
- TYPE II BARRICADES, DRUMS, OR VERTICAL PANEL POST
- TYPE III BARRICADE
- TEMPORARY CONCRETE BARRIER
- IMPACT ATTENUATOR, TEMPORARY (SEVERE USE, NARROW), TEST LEVEL 3
- TEMPORARY PAVEMENT
- WORK ZONE

50' 0 50' 100'
SCALE: 1" = 50'

MODEL: Default
FILE NAME: Z:\17049 IDOT CMT I-270 Phase I\DGN\Design Files\Plan Sheets\017-0200017_gsk_staging-PreSTG_270_007.dgn

USER NAME = jdardeen	DESIGNED - JRD	REVISED -	
	DRAWN - JRD	REVISED -	
PLOT SCALE = 100.0000 ' / in.	CHECKED - SLD	REVISED -	
PLOT DATE = 6/4/2024	DATE - 6/4/2024	REVISED -	

STATE OF ILLINOIS
DEPARTMENT OF TRANSPORTATION

MAINTENANCE OF TRAFFIC PRESTAGE
F.A.I. 270 (I-270)

SCALE: 1" = 50' | SHEET 17 OF 87 SHEETS | STA. 367+00 TO STA. 381+00

F.A.I. RTE.	SECTION	COUNTY	TOTAL SHEETS	SHEET NO.
270	60-3K-1	MADISON	576	83
		CONTRACT NO. 76818		
		ILLINOIS	FED. AID PROJECT	

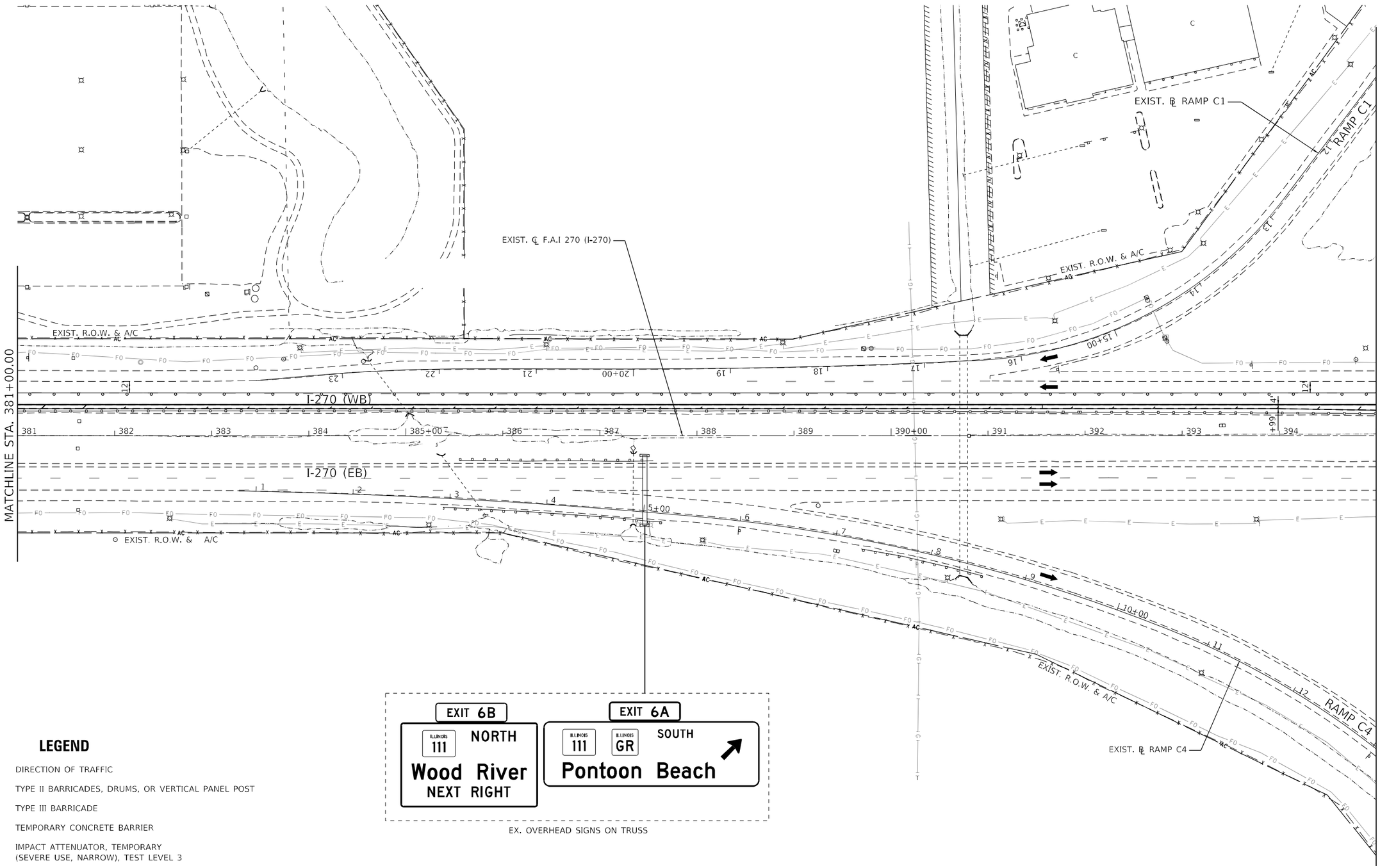

LEGEND

- DIRECTION OF TRAFFIC
- TYPE II BARRICADES, DRUMS, OR VERTICAL PANEL POST
- TYPE III BARRICADE
- TEMPORARY CONCRETE BARRIER
- IMPACT ATTENUATOR, TEMPORARY (SEVERE USE, NARROW), TEST LEVEL 3
- TEMPORARY PAVEMENT
- WORK ZONE

MODEL: Default
FILE NAME: Z:\17049 IDOT C4IT I-270 Phase II\DGN\Design\Final\Mots\Pre\STG_270_008.dgn

USER NAME = jdardeen	DESIGNED - JRD	REVISED -	
	DRAWN - JRD	REVISED -	
PLOT SCALE = 100.0000 ' / in.	CHECKED - SLD	REVISED -	
PLOT DATE = 6/4/2024	DATE - 6/4/2024	REVISED -	

STATE OF ILLINOIS
DEPARTMENT OF TRANSPORTATION

MAINTENANCE OF TRAFFIC PRESTAGE
F.A.I. 270 (I-270)

SCALE: 1" = 50' | SHEET 18 OF 87 SHEETS | STA. 381+00 TO STA. 395+00

F.A.I. RTE.	SECTION	COUNTY	TOTAL SHEETS	SHEET NO.
270	60-3K-1	MADISON	576	84
		CONTRACT NO. 76818		
	ILLINOIS	FED. AID PROJECT		

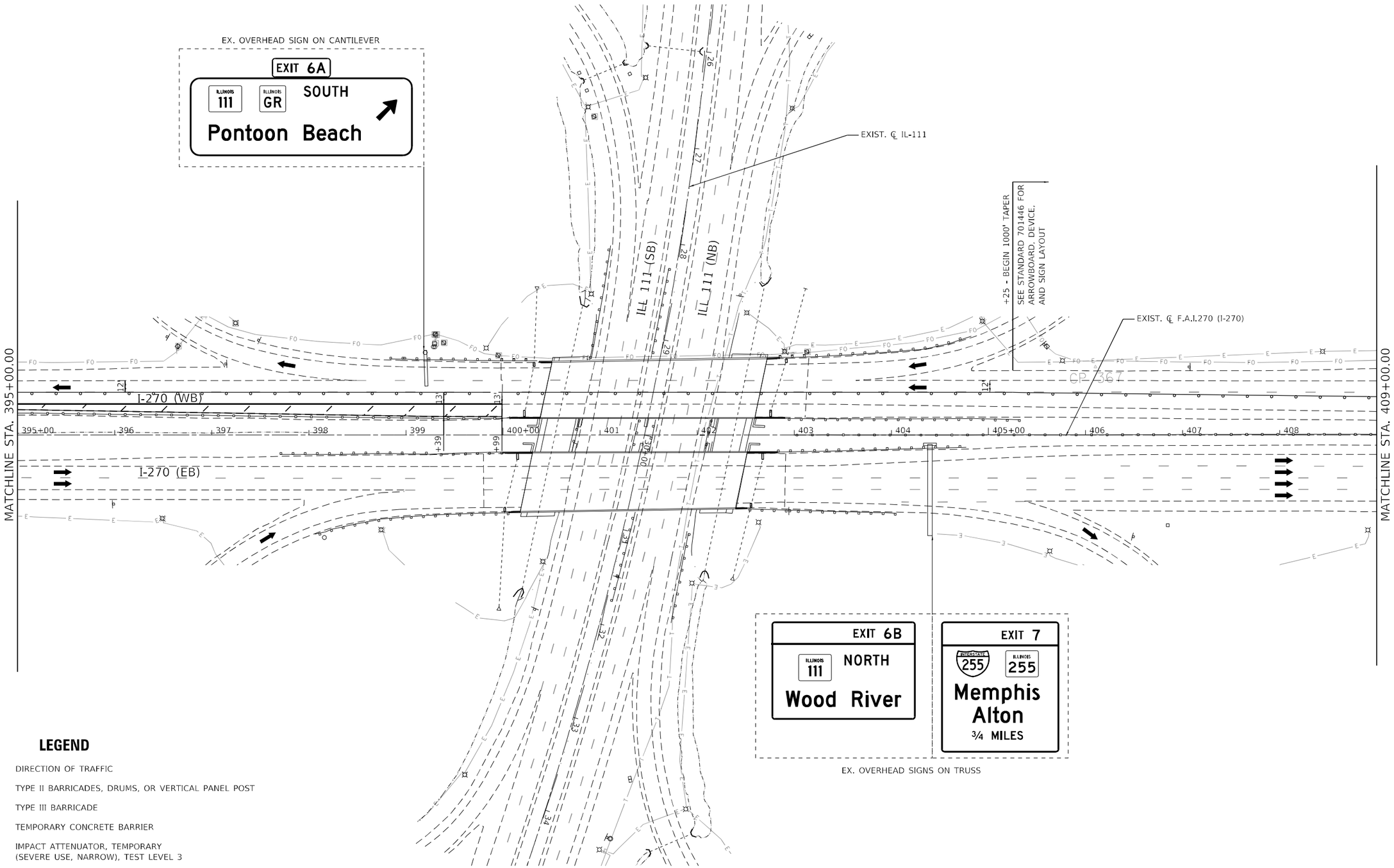

LEGEND

- DIRECTION OF TRAFFIC
- TYPE II BARRICADES, DRUMS, OR VERTICAL PANEL POST
- TYPE III BARRICADE
- TEMPORARY CONCRETE BARRIER
- IMPACT ATTENUATOR, TEMPORARY (SEVERE USE, NARROW), TEST LEVEL 3
- TEMPORARY PAVEMENT
- WORK ZONE

50' 0 50' 100'
SCALE: 1" = 50'

MODEL: Default
FILE NAME: Z:\17049 IDOT CMT I-270 Phase II\DGN\Design\Final\Mots-eers\019-\20000917_sht_staging-PreSTG_270_009.dgn

USER NAME = jdardeen	DESIGNED - JRD	REVISED -	
	DRAWN - JRD	REVISED -	
PLOT SCALE = 100.0000 ' / in.	CHECKED - SLD	REVISED -	
PLOT DATE = 6/4/2024	DATE - 6/4/2024	REVISED -	

STATE OF ILLINOIS
DEPARTMENT OF TRANSPORTATION

MAINTENANCE OF TRAFFIC PRESTAGE
F.A.I. 270 (I-270)

SCALE: 1" = 50' | SHEET 19 OF 87 SHEETS | STA. 395+00 TO STA. 409+00

F.A.I. RTE.	SECTION	COUNTY	TOTAL SHEETS	SHEET NO.
270	60-3K-1	MADISON	576	85

CONTRACT NO. 76818

ILLINOIS | FED. AID PROJECT

EX. OVERHEAD SIGNS ON TRUSS

EXIT 4
ILLINOIS 203
Granite City
1 ½ MILES

EXIT 6A
ILLINOIS 111 SOUTH
Pontoon Beach
NEXT RIGHT

EXIT 6B
ILLINOIS 111 NORTH
Wood River
EXIT ONLY

EXIST. ℄ RAMP C5

RAMP C5

+25 - END
1000' TAPER

EXIST. R.O.W. & A/C

I-270 (WB)

I-270 (EB)

MATCHLINE STA. 409+00.00

MATCHLINE STA. 423+00.00

409 | 410+00 | 411 | 412 | 413 | 414 | 415+00 | 416 | 417 | 418 | 419 | 420+00 | 421 | 422

00+00 | 00+50 | 10+00

EXIST. ℄ RAMP C8

RAMP C8

20+00 | 21 | 22 | 23 | 24 | 25+00

FRONTAGE RD

EXIST. A/C

EXIST. R.O.W.

EXIST. ℄ F.A.I. 270 (I-270)

LEGEND

- DIRECTION OF TRAFFIC
- TYPE II BARRICADES, DRUMS, OR VERTICAL PANEL POST
- TYPE III BARRICADE
- TEMPORARY CONCRETE BARRIER
- IMPACT ATTENUATOR, TEMPORARY (SEVERE USE, NARROW), TEST LEVEL 3
- TEMPORARY PAVEMENT
- WORK ZONE

50' 0 50' 100'
SCALE: 1" = 50'

MODEL: Default
FILE NAME: Z:\17049 IDOT C4T I-270 Phase I\DGN\Design\Final\BRMatsheets\026-0800917_4thr_staging-PreSTG_270_010.dgn

USER NAME = jdardeen	DESIGNED - JRD	REVISED -	
	DRAWN - JRD	REVISED -	
PLOT SCALE = 100.0000 ' / in.	CHECKED - SLD	REVISED -	
PLOT DATE = 6/4/2024	DATE - 6/4/2024	REVISED -	

STATE OF ILLINOIS
DEPARTMENT OF TRANSPORTATION

MAINTENANCE OF TRAFFIC PRESTAGE
F.A.I. 270 (I-270)

SCALE: 1" = 50' | SHEET 20 OF 87 SHEETS | STA. 409+00 TO STA. 423+00

F.A.I. RTE.	SECTION	COUNTY	TOTAL SHEETS	SHEET NO.
270	60-3K-1	MADISON	576	86

CONTRACT NO. 76818

ILLINOIS | FED. AID PROJECT

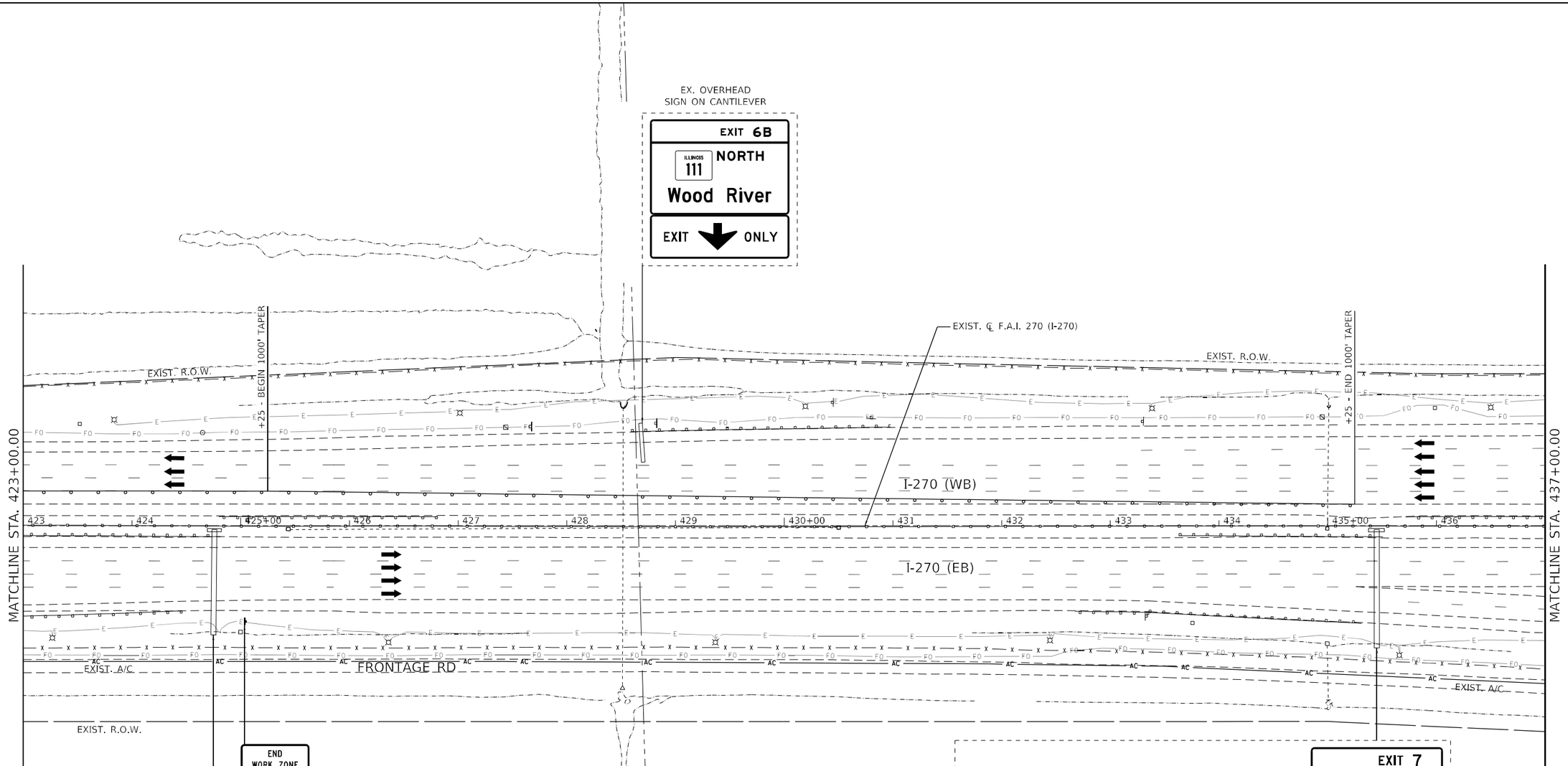

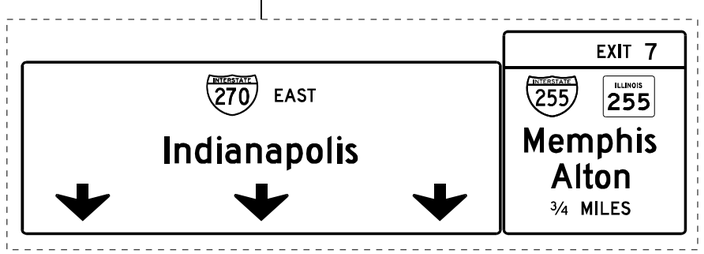

EX. OVERHEAD SIGNS ON TRUSS

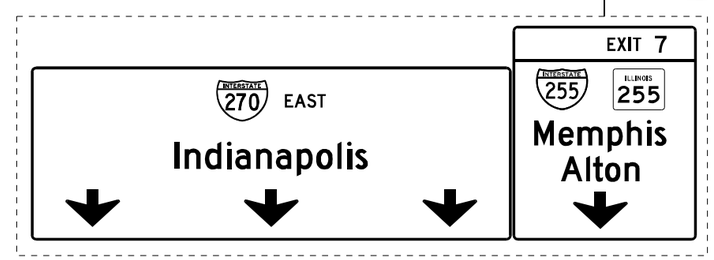

EX. OVERHEAD SIGNS ON TRUSS

LEGEND

- DIRECTION OF TRAFFIC
- TYPE II BARRICADES, DRUMS, OR VERTICAL PANEL POST
- TYPE III BARRICADE
- TEMPORARY CONCRETE BARRIER
- IMPACT ATTENUATOR, TEMPORARY (SEVERE USE, NARROW), TEST LEVEL 3
- TEMPORARY PAVEMENT
- WORK ZONE

50' 0 50' 100'
SCALE: 1" = 50'

USER NAME = jdardeen	DESIGNED - JRD	REVISED -
	DRAWN - JRD	REVISED -
PLOT SCALE = 100.0000 ' / in.	CHECKED - SLD	REVISED -
PLOT DATE = 6/4/2024	DATE - 6/4/2024	REVISED -

STATE OF ILLINOIS
DEPARTMENT OF TRANSPORTATION

MAINTENANCE OF TRAFFIC PRESTAGE
F.A.I. 270 (I-270)

SCALE: 1" = 50' | SHEET 21 OF 87 SHEETS | STA. 423+00 TO STA. 437+00

F.A.I. RTE.	SECTION	COUNTY	TOTAL SHEETS	SHEET NO.
270	60-3K-1	MADISON	576	87
		CONTRACT NO. 76818		
		ILLINOIS	FED. AID PROJECT	

MODEL: Default
FILE NAME: 7217049 IDOT CMT I-270 Phase 1 DGN/Design/Fins/Matchsheets/021-0200917-sht_staging-PreSTC 270 011.dgn

EX. GROUNDED MOUNTED SIGN LOCATED WEST OF I-255 BRIDGE

EX. OVERHEAD SIGNS ON TRUSS LOCATED EAST OF I-255 BRIDGE

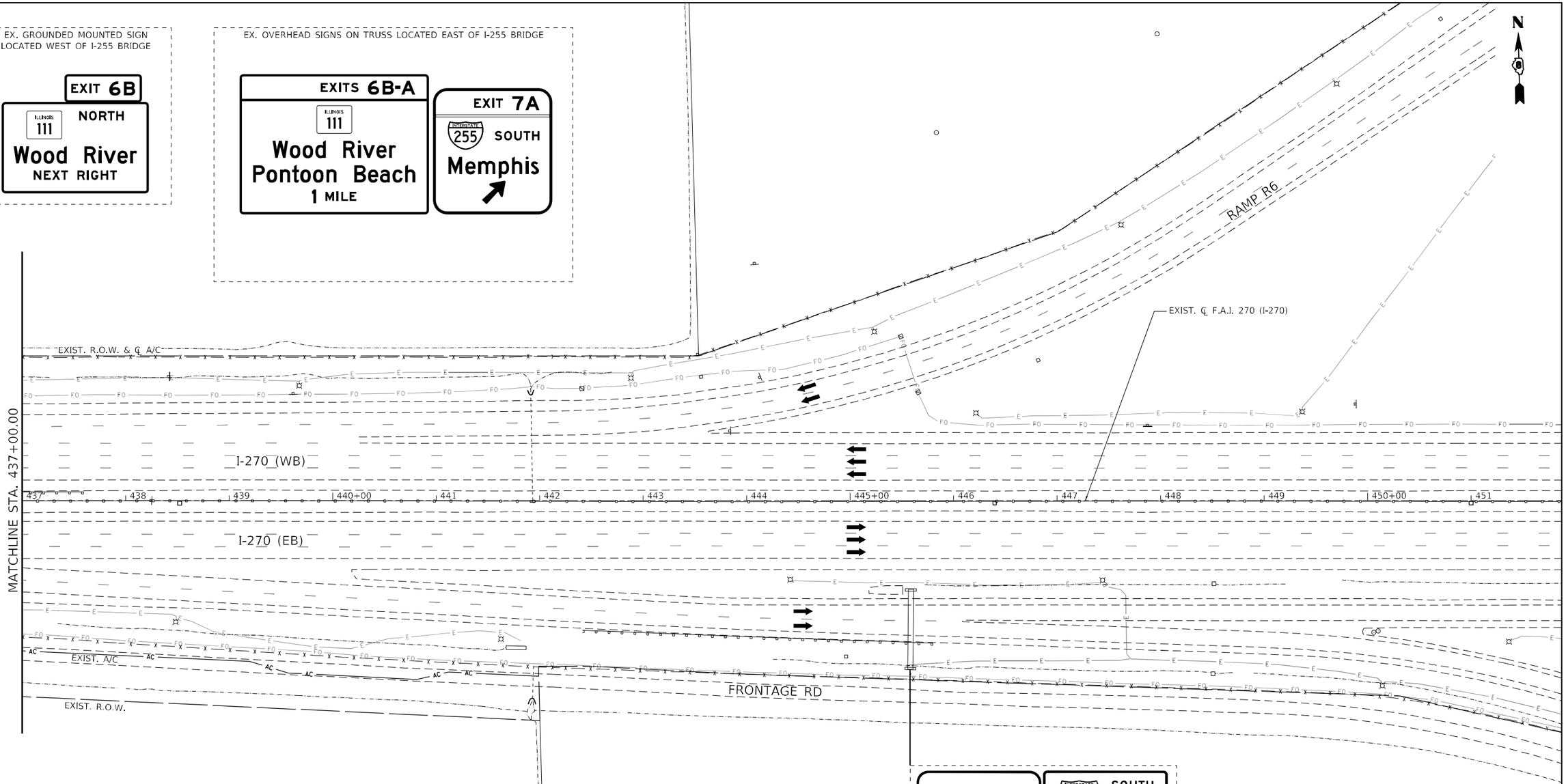

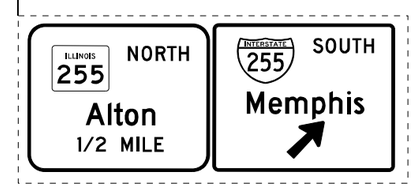

EX. OVERHEAD SIGNS ON TRUSS

LEGEND

- DIRECTION OF TRAFFIC
- TYPE II BARRICADES, DRUMS, OR VERTICAL PANEL POST
- TYPE III BARRICADE
- TEMPORARY CONCRETE BARRIER
- IMPACT ATTENUATOR, TEMPORARY (SEVERE USE, NARROW), TEST LEVEL 3
- TEMPORARY PAVEMENT
- WORK ZONE

50' 0 50' 100'
SCALE: 1" = 50'

MODEL: Default
FILE NAME: 76818049 IDOT CMT I-270 Phase 1 DGN\Design\Fins\Matchsheets\022-0280917-sht_staging-PreSTC 270 012.dgn

USER NAME = jdardeen	DESIGNED - JRD	REVISED -	
	DRAWN - JRD	REVISED -	
PLOT SCALE = 100.0000 ' / in.	CHECKED - SLD	REVISED -	
PLOT DATE = 6/4/2024	DATE - 6/4/2024	REVISED -	

STATE OF ILLINOIS
DEPARTMENT OF TRANSPORTATION

MAINTENANCE OF TRAFFIC PRESTAGE
F.A.I. 270 (I-270)

SCALE: 1" = 50' | SHEET 22 OF 87 SHEETS | STA. 437+00 TO STA. 451+00

F.A.I. RTE.	SECTION	COUNTY	TOTAL SHEETS	SHEET NO.
270	60-3K-1	MADISON	576	88
		CONTRACT NO. 76818		
		ILLINOIS	FED. AID PROJECT	

ADVANCED SIGNING ALONG IL ROUTE 111 (SOUTHBOUND)

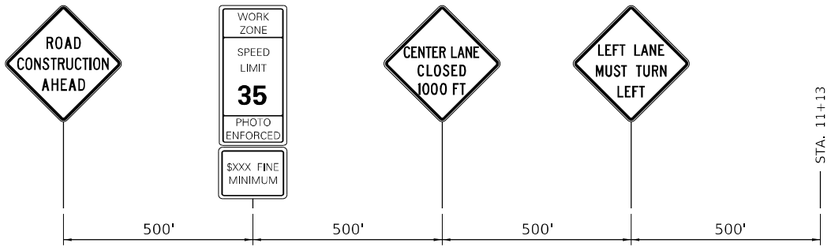

NOTES:
1. WHEN NECESSARY, COVER SIGNS IN CONFLICT WITH THE TRAFFIC PATTERNS SHOWN ON THE STAGING SHEETS.
2. ALL ADVANCED WARNING SIGNS SHALL BE PLACED ON EITHER SIDE OF SOUTHBOUND IL ROUTE 111.

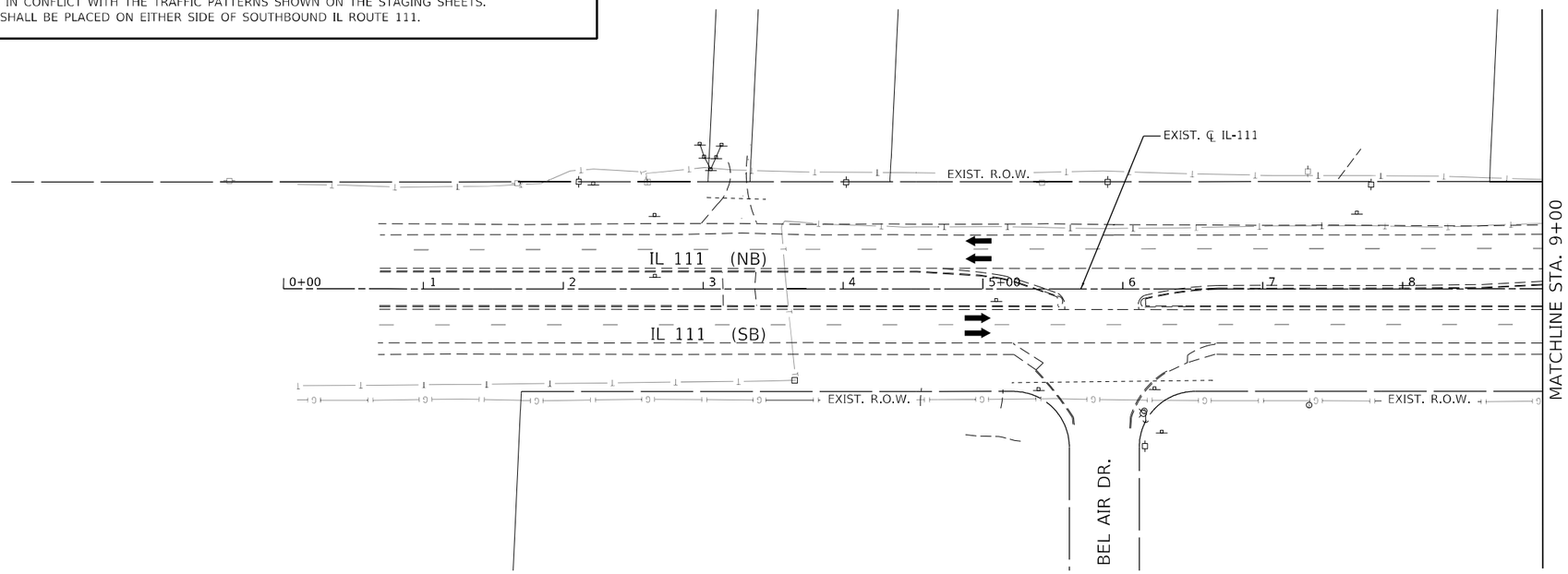

LEGEND

- DIRECTION OF TRAFFIC
- TYPE II BARRICADES, DRUMS, OR VERTICAL PANEL POST
- TYPE III BARRICADE
- TEMPORARY CONCRETE BARRIER
- IMPACT ATTENUATOR, TEMPORARY (SEVERE USE, NARROW), TEST LEVEL 3
- TEMPORARY PAVEMENT
- WORK ZONE

50' 0 50' 100'
SCALE: 1" = 50'

MODEL: 50 Scale Clipping Shape
FILE NAME: 7:\7049 IDOT CMT I-270 Phase 1\DGN\Design\Final\Mot\ewers\023-P880917_zone_staging-STG1_111-001.dgn

USER NAME = jdardeen	DESIGNED - JRD	REVISED -	STATE OF ILLINOIS DEPARTMENT OF TRANSPORTATION
	DRAWN - JRD	REVISED -	
PLOT SCALE = 100.0000 ' / in.	CHECKED - SLD	REVISED -	
PLOT DATE = 6/4/2024	DATE - 6/4/2024	REVISED -	

MAINTENANCE OF TRAFFIC - STAGE 1
F.A.P. 582 (IL 111)

SCALE: 1" = 50' | SHEET 23 OF 87 SHEETS | STA. 0+00 TO STA. 9+00

F.A.I. RTE.	SECTION	COUNTY	TOTAL SHEETS	SHEET NO.
270	60-3K-1	MADISON	576	89
		CONTRACT NO. 76818		
		ILLINOIS	FED. AID PROJECT	

ADVANCED SIGNING ALONG CHAIN OF ROCKS RD (WESTBOUND)

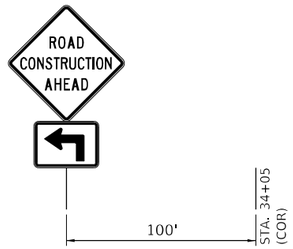

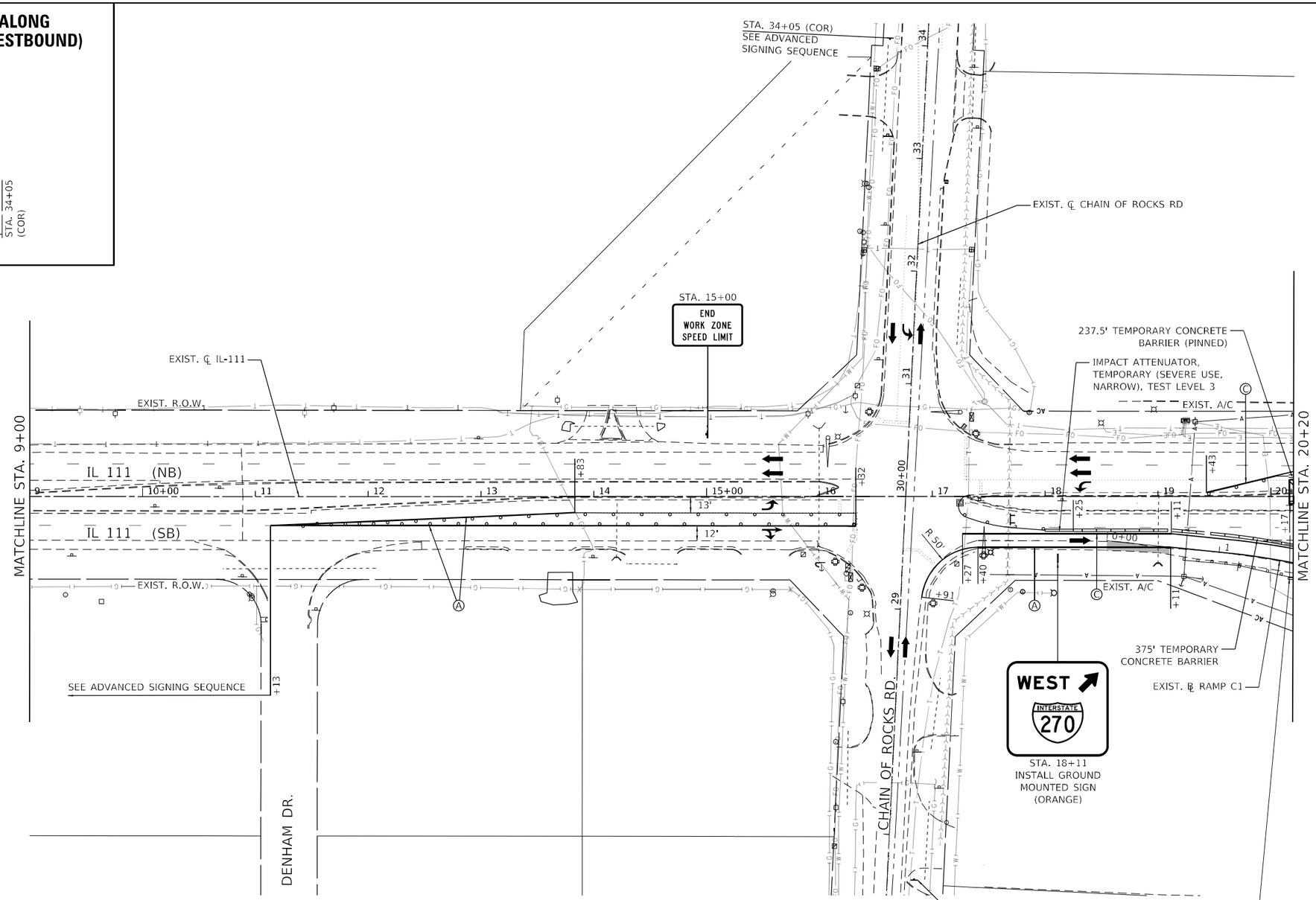

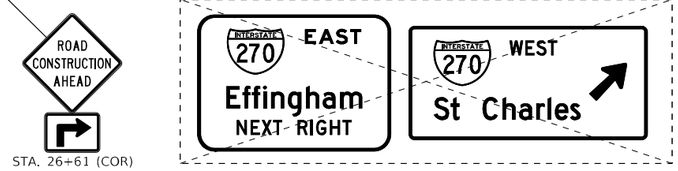

REMOVE EX. OVERHEAD SIGN TRUSS AND SIGNS

50' 0 50' 100'
SCALE: 1" = 50'

LEGEND

- DIRECTION OF TRAFFIC
- TYPE II BARRICADES, DRUMS, OR VERTICAL PANEL POST
- TYPE III BARRICADE
- TEMPORARY CONCRETE BARRIER
- IMPACT ATTENUATOR, TEMPORARY (SEVERE USE, NARROW), TEST LEVEL 3
- TEMPORARY PAVEMENT
- WORK ZONE

MOT PAVEMENT MARKING LEGEND

- Ⓐ - PAVEMENT MARKING TAPE, TYPE III, LINE 4", SOLID WHITE
- Ⓑ - PAVEMENT MARKING TAPE, TYPE III, LINE 4", SOLID WHITE, SKIP DASH, (10' LINE - 30' SPACE)
- Ⓒ - PAVEMENT MARKING TAPE, TYPE III, LINE 4", SOLID YELLOW
- Ⓓ - PAVEMENT MARKING TAPE, TYPE III, LINE 4", WHITE DOTTED (2' LINE - 6" SPACE)
- Ⓔ - PAVEMENT MARKING TAPE, TYPE III, LINE 6", SOLID WHITE
- Ⓕ - PAVEMENT MARKING TAPE, TYPE III, LINE 6", SOLID YELLOW
- Ⓖ - PAVEMENT MARKING TAPE, TYPE III, LINE 12", SOLID WHITE
- Ⓗ - PAVEMENT MARKING TAPE, TYPE III, LINE 24", SOLID WHITE
- Ⓘ - PAVEMENT MARKING TAPE, TYPE III, LETTERS AND SYMBOLS

MODEL: 50 Scale Clipping Shape
FILE NAME: Z:\17049 IDOT CMT I-270 Phase I\DGN\Design\Final\Plots\Sheets\0242-080917_MOT_staging-STG1_111-002.dgn

USER NAME = jdardeen	DESIGNED - JRD	REVISED -	STATE OF ILLINOIS DEPARTMENT OF TRANSPORTATION
	DRAWN - JRD	REVISED -	
PLOT SCALE = 100.0000 ' / in.	CHECKED - SLD	REVISED -	
PLOT DATE = 6/4/2024	DATE - 6/4/2024	REVISED -	

MAINTENANCE OF TRAFFIC - STAGE 1
F.A.P. 582 (IL 111)

SCALE: 1" = 50' | SHEET 24 OF 87 SHEETS | STA. 9+00 TO STA. 20+20

F.A.I. RTE.	SECTION	COUNTY	TOTAL SHEETS	SHEET NO.
270	60-3K-1	MADISON	576	90
		CONTRACT NO. 76818		
		ILLINOIS	FED. AID PROJECT	

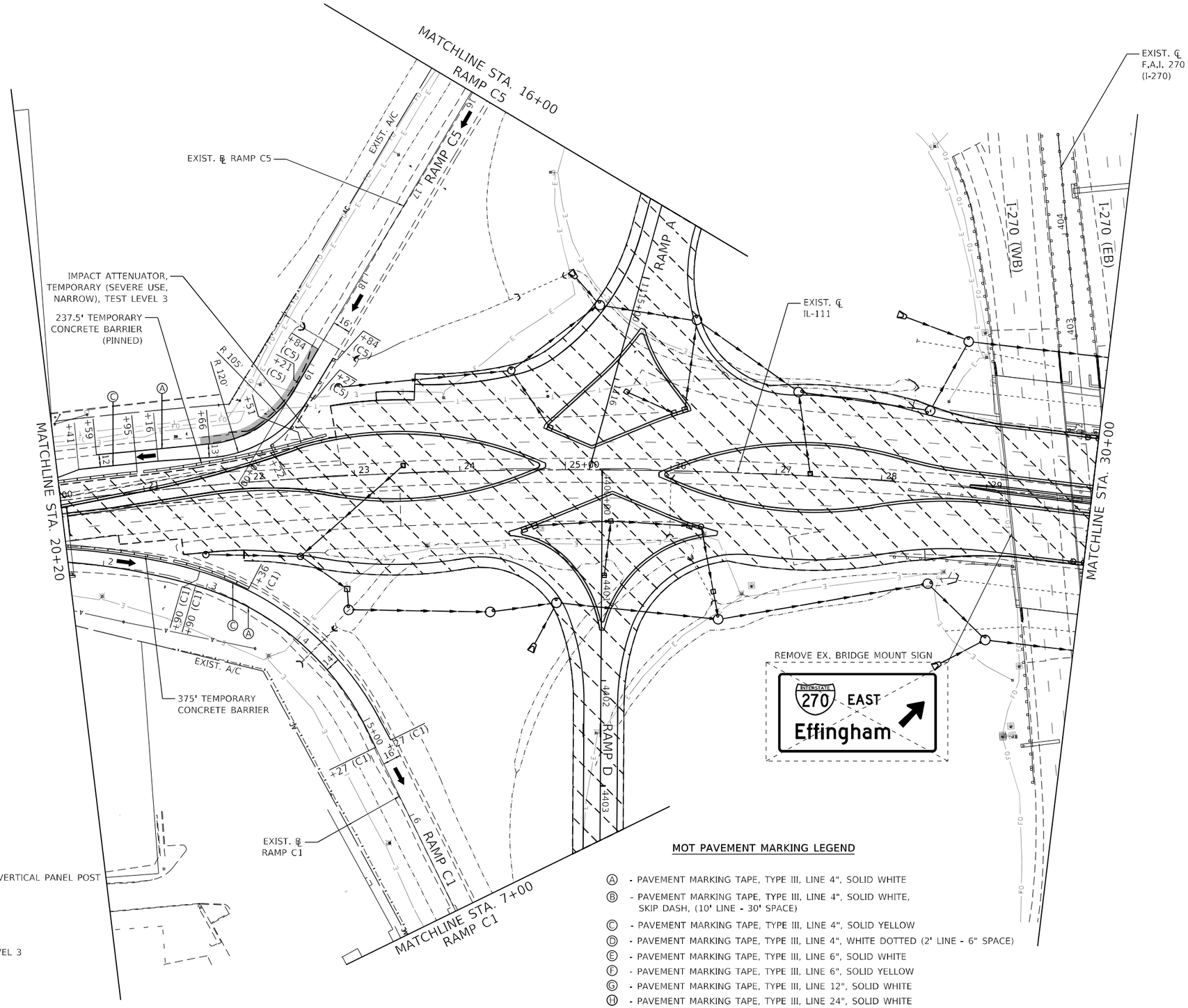

LEGEND

- DIRECTION OF TRAFFIC
- TYPE II BARRICADES, DRUMS, OR VERTICAL PANEL POST
- TYPE III BARRICADE
- TEMPORARY CONCRETE BARRIER
- IMPACT ATTENUATOR, TEMPORARY (SEVERE USE, NARROW), TEST LEVEL 3
- TEMPORARY PAVEMENT
- WORK ZONE

MOT PAVEMENT MARKING LEGEND

- Ⓐ - PAVEMENT MARKING TAPE, TYPE III, LINE 4", SOLID WHITE
- Ⓑ - PAVEMENT MARKING TAPE, TYPE III, LINE 4", SOLID WHITE, SKIP DASH, (10' LINE - 30' SPACE)
- Ⓒ - PAVEMENT MARKING TAPE, TYPE III, LINE 4", SOLID YELLOW
- Ⓓ - PAVEMENT MARKING TAPE, TYPE III, LINE 4", WHITE DOTTED (2' LINE - 6" SPACE)
- Ⓔ - PAVEMENT MARKING TAPE, TYPE III, LINE 6", SOLID WHITE
- Ⓕ - PAVEMENT MARKING TAPE, TYPE III, LINE 6", SOLID YELLOW
- Ⓖ - PAVEMENT MARKING TAPE, TYPE III, LINE 12", SOLID WHITE
- Ⓗ - PAVEMENT MARKING TAPE, TYPE III, LINE 24", SOLID WHITE
- Ⓘ - PAVEMENT MARKING TAPE, TYPE III, LETTERS AND SYMBOLS

50' 0 50' 100'
SCALE: 1" = 50'

MODEL: 50 Scale Clipping Shape
FILE NAME: Z:\17049 IDOT CMT I-270 Phase I\DGN\Design Files\Match-sheets\023-0200917_gsk_staging-STG1_111-003.dgn

USER NAME = jdardeen	DESIGNED - JRD	REVISED -	
	DRAWN - JRD	REVISED -	
PLOT SCALE = 100.0000 ' / in.	CHECKED - SLD	REVISED -	
PLOT DATE = 6/4/2024	DATE - 6/4/2024	REVISED -	

STATE OF ILLINOIS
DEPARTMENT OF TRANSPORTATION

MAINTENANCE OF TRAFFIC - STAGE 1
F.A.P. 582 (IL 111)

SCALE: 1" = 50' | SHEET 25 OF 87 SHEETS | STA. 20+20 TO STA. 30+00

F.A.I. RTE.	SECTION	COUNTY	TOTAL SHEETS	SHEET NO.
270	60-3K-1	MADISON	576	91
		CONTRACT NO. 76818		
		ILLINOIS	FED. AID PROJECT	

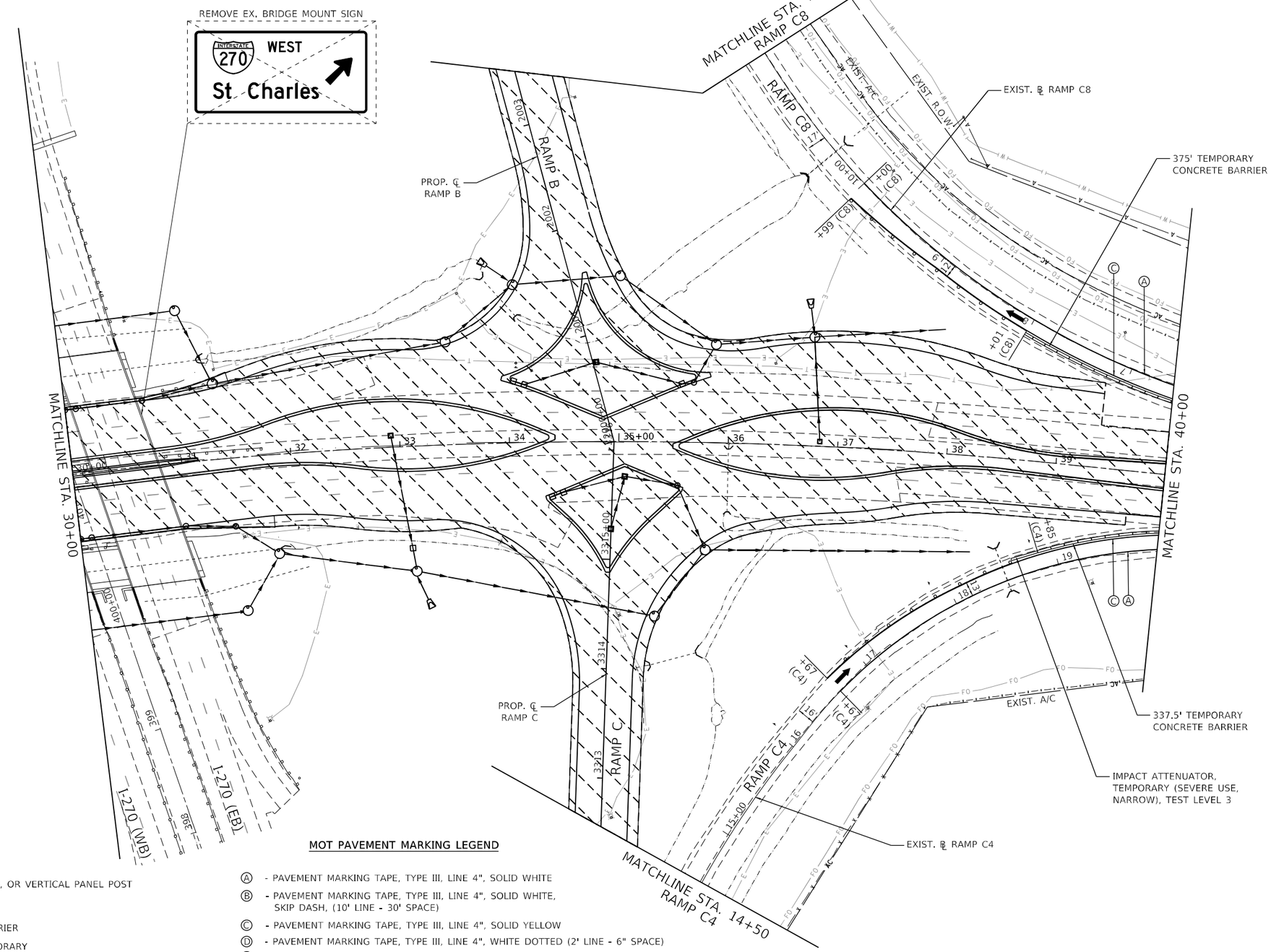

LEGEND

- DIRECTION OF TRAFFIC
- TYPE II BARRICADES, DRUMS, OR VERTICAL PANEL POST
- TYPE III BARRICADE
- TEMPORARY CONCRETE BARRIER
- IMPACT ATTENUATOR, TEMPORARY (SEVERE USE, NARROW), TEST LEVEL 3
- TEMPORARY PAVEMENT
- WORK ZONE

MOT PAVEMENT MARKING LEGEND

- Ⓐ - PAVEMENT MARKING TAPE, TYPE III, LINE 4", SOLID WHITE
- Ⓑ - PAVEMENT MARKING TAPE, TYPE III, LINE 4", SOLID WHITE, SKIP DASH, (10' LINE - 30' SPACE)
- Ⓒ - PAVEMENT MARKING TAPE, TYPE III, LINE 4", SOLID YELLOW
- Ⓓ - PAVEMENT MARKING TAPE, TYPE III, LINE 4", WHITE DOTTED (2' LINE - 6" SPACE)
- Ⓔ - PAVEMENT MARKING TAPE, TYPE III, LINE 6", SOLID WHITE
- Ⓕ - PAVEMENT MARKING TAPE, TYPE III, LINE 6", SOLID YELLOW
- Ⓖ - PAVEMENT MARKING TAPE, TYPE III, LINE 12", SOLID WHITE
- Ⓗ - PAVEMENT MARKING TAPE, TYPE III, LINE 24", SOLID WHITE
- Ⓘ - PAVEMENT MARKING TAPE, TYPE III, LETTERS AND SYMBOLS

50' 0 50' 100'
SCALE: 1" = 50'

MODEL: 50 Scale Clipping Shape
FILE NAME: 2:\17049 IDOT CMT I-270 Phase II\DGN\Design\Final\Roadways\076-0800917_sht_staging-STG1_111-004.dgn

USER NAME = jdardeen	DESIGNED - JRD	REVISED -	
	DRAWN - JRD	REVISED -	
PLOT SCALE = 100.0000 ' / in.	CHECKED - SLD	REVISED -	
PLOT DATE = 6/4/2024	DATE - 6/4/2024	REVISED -	

STATE OF ILLINOIS
DEPARTMENT OF TRANSPORTATION

MAINTENANCE OF TRAFFIC - STAGE 1
F.A.P. 582 (IL 111)

SCALE: 1" = 50' | SHEET 26 OF 87 SHEETS | STA. 30+00 TO STA. 40+00

F.A.I. RTE.	SECTION	COUNTY	TOTAL SHEETS	SHEET NO.
270	60-3K-1	MADISON	576	92
		CONTRACT NO. 76818		
	ILLINOIS	FED. AID PROJECT		

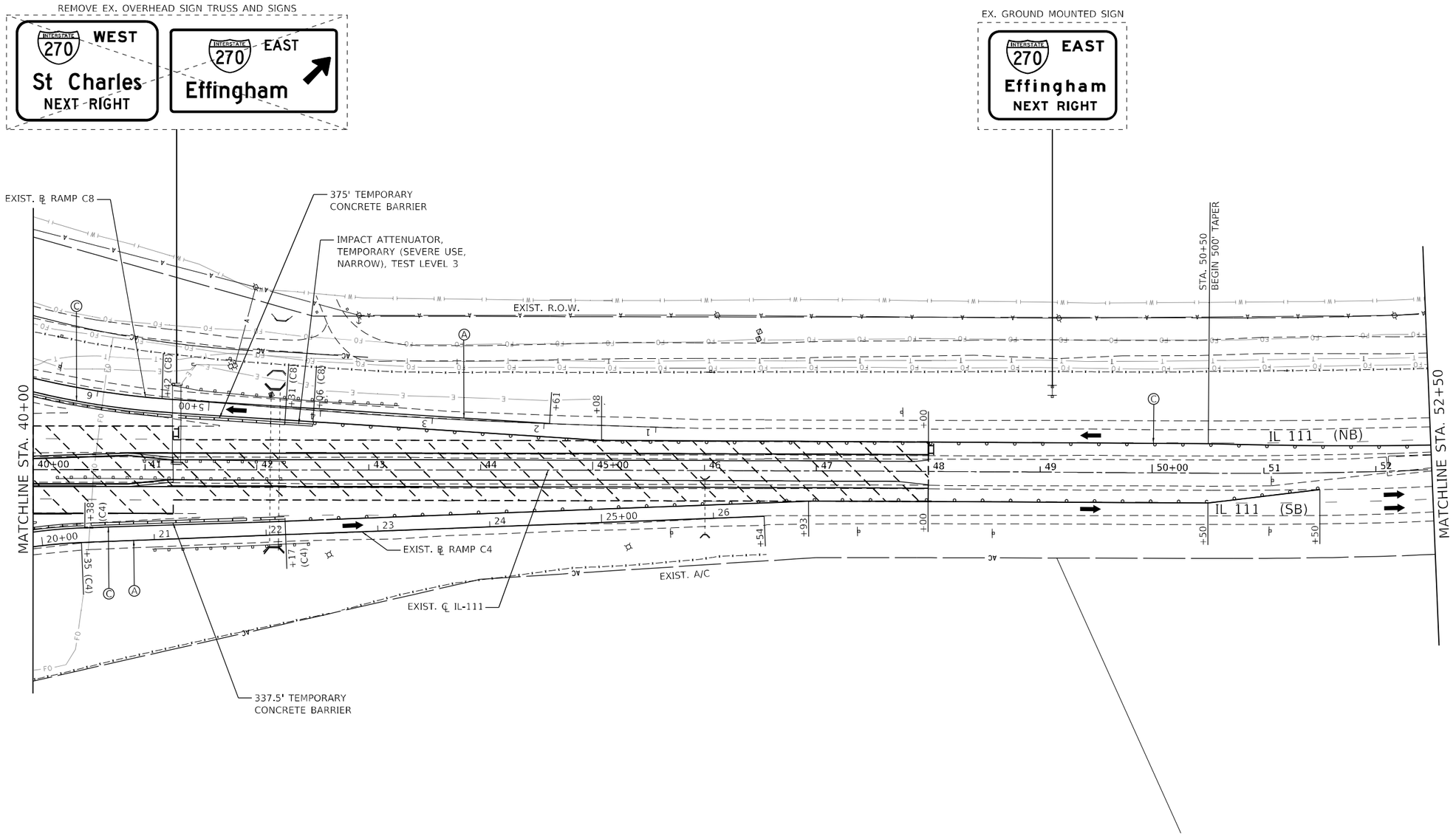

LEGEND

- DIRECTION OF TRAFFIC
- TYPE II BARRICADES, DRUMS, OR VERTICAL PANEL POST
- TYPE III BARRICADE
- TEMPORARY CONCRETE BARRIER
- IMPACT ATTENUATOR, TEMPORARY (SEVERE USE, NARROW), TEST LEVEL 3
- TEMPORARY PAVEMENT
- WORK ZONE

MOT PAVEMENT MARKING LEGEND

- Ⓐ - PAVEMENT MARKING TAPE, TYPE III, LINE 4", SOLID WHITE
- Ⓑ - PAVEMENT MARKING TAPE, TYPE III, LINE 4", SOLID WHITE, SKIP DASH, (10' LINE - 30' SPACE)
- Ⓒ - PAVEMENT MARKING TAPE, TYPE III, LINE 4", SOLID YELLOW
- Ⓓ - PAVEMENT MARKING TAPE, TYPE III, LINE 4", WHITE DOTTED (2' LINE - 6" SPACE)
- Ⓔ - PAVEMENT MARKING TAPE, TYPE III, LINE 6", SOLID WHITE
- Ⓕ - PAVEMENT MARKING TAPE, TYPE III, LINE 6", SOLID YELLOW
- Ⓖ - PAVEMENT MARKING TAPE, TYPE III, LINE 12", SOLID WHITE
- Ⓗ - PAVEMENT MARKING TAPE, TYPE III, LINE 24", SOLID WHITE
- Ⓘ - PAVEMENT MARKING TAPE, TYPE III, LETTERS AND SYMBOLS

50' 0 50' 100'
SCALE: 1" = 50'

MODEL: 50 Scale Clipping Shape
FILE NAME: Z:\17049 IDOT CMT I-270 Phase I\DGN\Design Files\Matchsheets\027-0080917_gsk_staging-STG1_111-005.dgn

USER NAME = jdardeen	DESIGNED - JRD	REVISED -	
	DRAWN - JRD	REVISED -	
PLOT SCALE = 100.0000 ' / in.	CHECKED - SLD	REVISED -	
PLOT DATE = 6/4/2024	DATE - 6/4/2024	REVISED -	

STATE OF ILLINOIS
DEPARTMENT OF TRANSPORTATION

MAINTENANCE OF TRAFFIC - STAGE 1
F.A.P. 582 (IL 111)

SCALE: 1" = 50' | SHEET 27 OF 87 SHEETS | STA. 40+00 TO STA. 52+50

F.A.I. RTE.	SECTION	COUNTY	TOTAL SHEETS	SHEET NO.
270	60-3K-1	MADISON	576	93
		CONTRACT NO. 76818		

ILLINOIS | FED. AID PROJECT

ADVANCED SIGNING ALONG IL ROUTE 111 (NORTHBOUND)

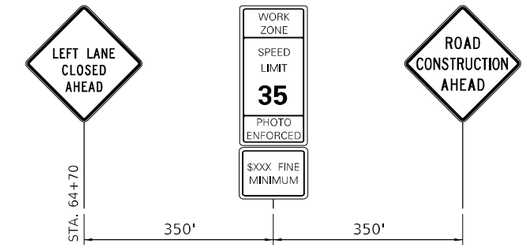

NOTES:
1. WHEN NECESSARY, COVER SIGNS IN CONFLICT WITH THE TRAFFIC PATTERNS SHOWN ON THE STAGING SHEETS.
2. ALL ADVANCED WARNING SIGNS SHALL BE PLACED ON EITHER SIDE OF NORTHBOUND IL ROUTE 111.

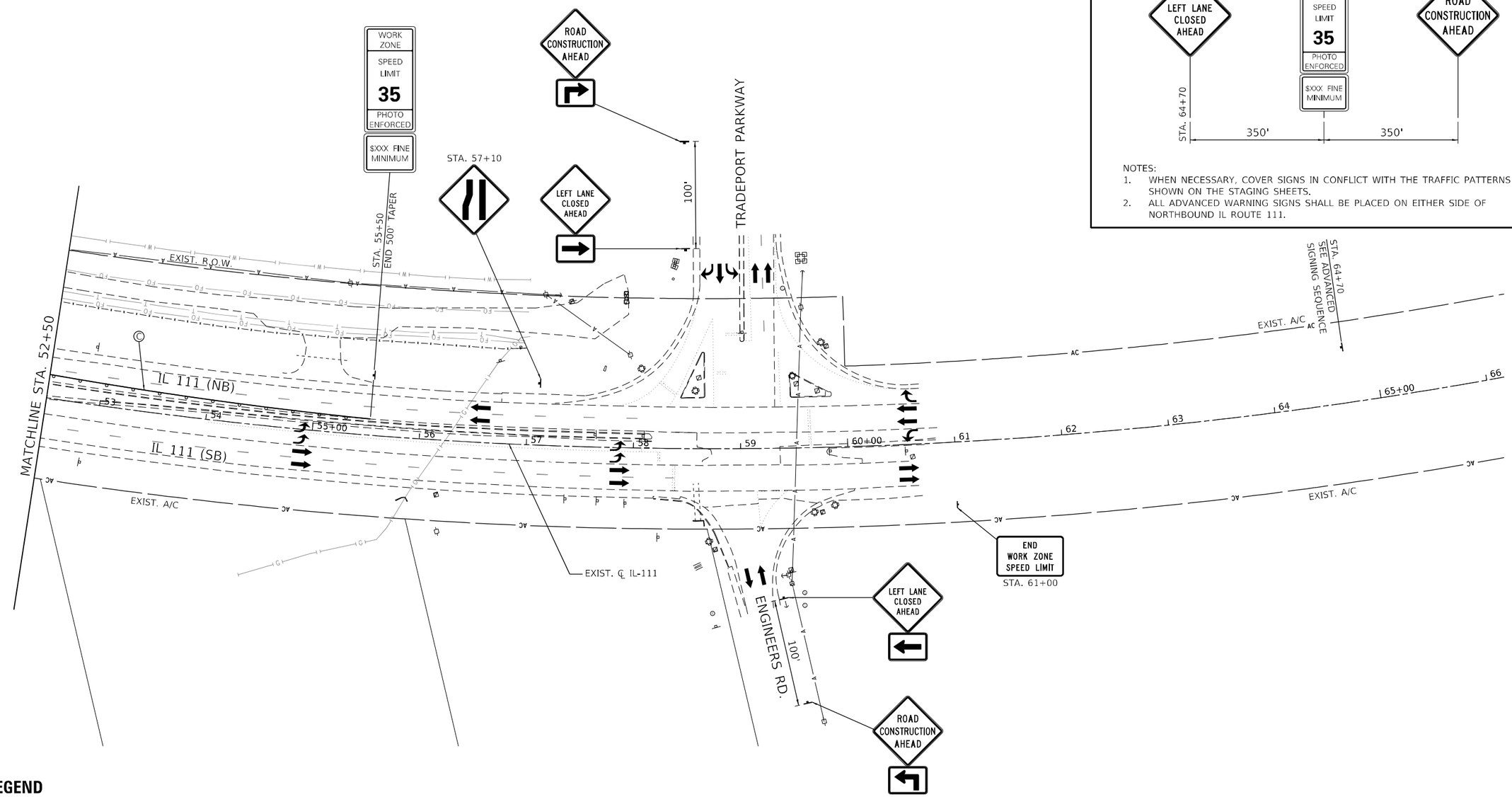

LEGEND

- DIRECTION OF TRAFFIC
- TYPE II BARRICADES, DRUMS, OR VERTICAL PANEL POST
- TYPE III BARRICADE
- TEMPORARY CONCRETE BARRIER
- IMPACT ATTENUATOR, TEMPORARY (SEVERE USE, NARROW), TEST LEVEL 3
- TEMPORARY PAVEMENT
- WORK ZONE

MOT PAVEMENT MARKING LEGEND

- (A) - PAVEMENT MARKING TAPE, TYPE III, LINE 4", SOLID WHITE
- (B) - PAVEMENT MARKING TAPE, TYPE III, LINE 4", SOLID WHITE, SKIP DASH, (10' LINE - 30' SPACE)
- (C) - PAVEMENT MARKING TAPE, TYPE III, LINE 4", SOLID YELLOW
- (D) - PAVEMENT MARKING TAPE, TYPE III, LINE 4", WHITE DOTTED (2' LINE - 6" SPACE)
- (E) - PAVEMENT MARKING TAPE, TYPE III, LINE 6", SOLID WHITE
- (F) - PAVEMENT MARKING TAPE, TYPE III, LINE 6", SOLID YELLOW
- (G) - PAVEMENT MARKING TAPE, TYPE III, LINE 12", SOLID WHITE
- (H) - PAVEMENT MARKING TAPE, TYPE III, LINE 24", SOLID WHITE
- (I) - PAVEMENT MARKING TAPE, TYPE III, LETTERS AND SYMBOLS

N

50' 0 50' 100'
SCALE: 1" = 50'

MODEL: 50 Scale Clipping Shape
FILE NAME: 221049 IDOT CMT I-270 Phase 1 DGN\Design\Final\Plansheets\028-P800917_ONE_staging-STG1_111-006.dgn

USER NAME = jdardeen	DESIGNED - JRD	REVISED -	
	DRAWN - JRD	REVISED -	
PLOT SCALE = 100.0000 ' / in.	CHECKED - SLD	REVISED -	
PLOT DATE = 6/4/2024	DATE - 6/4/2024	REVISED -	

STATE OF ILLINOIS
DEPARTMENT OF TRANSPORTATION

MAINTENANCE OF TRAFFIC - STAGE 1
F.A.P. 582 (IL 111)

SCALE: 1" = 50' | SHEET 28 OF 87 SHEETS | STA. 52+50 TO STA. 66+00

F.A.I. RTE.	SECTION	COUNTY	TOTAL SHEETS	SHEET NO.
270	60-3K-1	MADISON	576	94
		CONTRACT NO. 76818		
		ILLINOIS	FED. AID PROJECT	

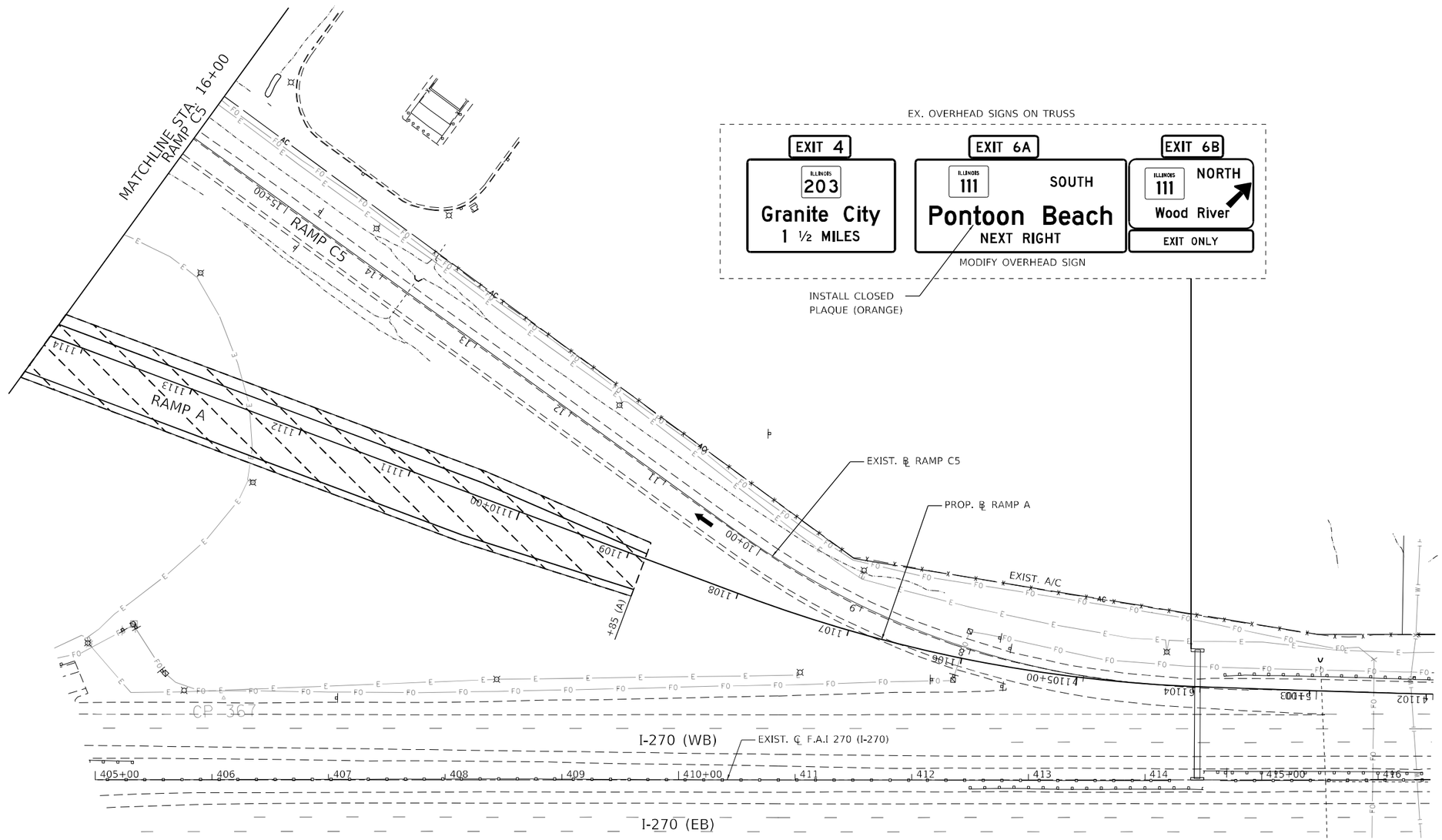

LEGEND

- DIRECTION OF TRAFFIC
- TYPE II BARRICADES, DRUMS, OR VERTICAL PANEL POST
- TYPE III BARRICADE
- TEMPORARY CONCRETE BARRIER
- IMPACT ATTENUATOR, TEMPORARY (SEVERE USE, NARROW), TEST LEVEL 3
- TEMPORARY PAVEMENT
- WORK ZONE

50' 0 50' 100'
SCALE: 1" = 50'

MODEL: Default
FILE NAME: 2:\17049 IDOT CMT I-270 Phase 1\DGN\Design\Final\Plots\Sheets\029-080917_GNR_staging-STG1_RAMPA.dgn

USER NAME = jdardeen	DESIGNED - JRD	REVISED -	
	DRAWN - JRD	REVISED -	
PLOT SCALE = 100.0000 ' / in.	CHECKED - SLD	REVISED -	
PLOT DATE = 6/4/2024	DATE - 6/4/2024	REVISED -	

STATE OF ILLINOIS
DEPARTMENT OF TRANSPORTATION

MAINTENANCE OF TRAFFIC - STAGE 1
F.A.P. 582 (IL 111) - RAMP A

SCALE: 1" = 50' | SHEET 29 OF 87 SHEETS | STA. 4+00 TO STA. 16+00

F.A.I. RTE.	SECTION	COUNTY	TOTAL SHEETS	SHEET NO.
270	60-3K-1	MADISON	576	95
		CONTRACT NO. 76818		
	ILLINOIS	FED. AID PROJECT		

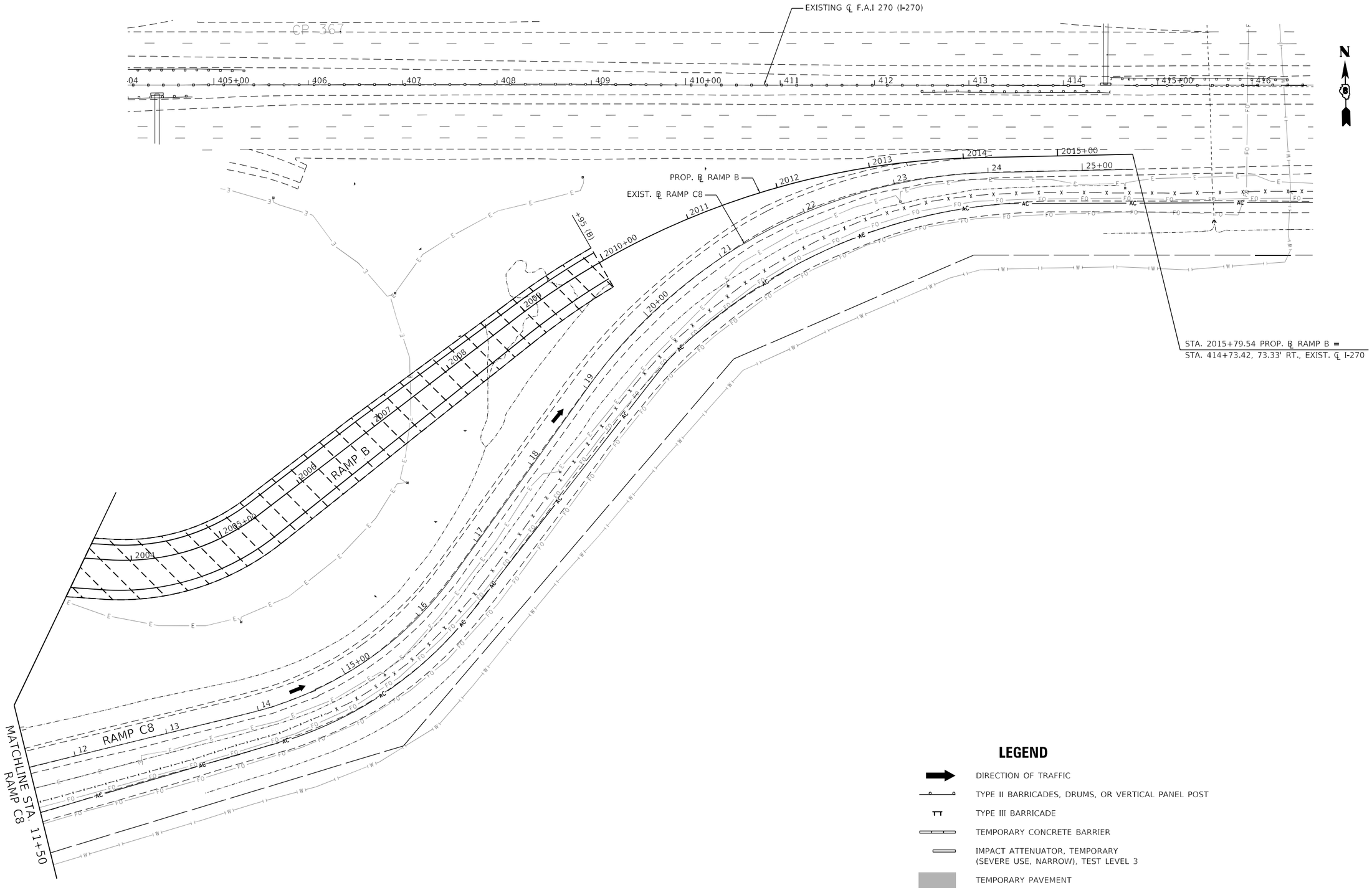

LEGEND

- DIRECTION OF TRAFFIC
- TYPE II BARRICADES, DRUMS, OR VERTICAL PANEL POST
- TYPE III BARRICADE
- TEMPORARY CONCRETE BARRIER
- IMPACT ATTENUATOR, TEMPORARY (SEVERE USE, NARROW), TEST LEVEL 3
- TEMPORARY PAVEMENT
- WORK ZONE

50' 0 50' 100'
SCALE: 1" = 50'

MODEL: Default
FILE NAME: Z:\17049 IDOT CMT I-270 Phase I\DGN\Design\Final\Mots+eers\038-0360917_sht_staging-STG1_RAMPB.dgn

USER NAME = jdardeen	DESIGNED - JRD	REVISED -	
	DRAWN - JRD	REVISED -	
PLOT SCALE = 100.0000 ' / in.	CHECKED - SLD	REVISED -	
PLOT DATE = 6/4/2024	DATE - 6/4/2024	REVISED -	

STATE OF ILLINOIS
DEPARTMENT OF TRANSPORTATION

MAINTENANCE OF TRAFFIC - STAGE 1
F.A.P. 582 (IL 111) - RAMP B

SCALE: 1" = 50' | SHEET 30 OF 87 SHEETS | STA. 11+50 TO STA. 25+53.65

F.A.I. RTE.	SECTION	COUNTY	TOTAL SHEETS	SHEET NO.
270	60-3K-1	MADISON	576	96

CONTRACT NO. 76818

ILLINOIS | FED. AID PROJECT

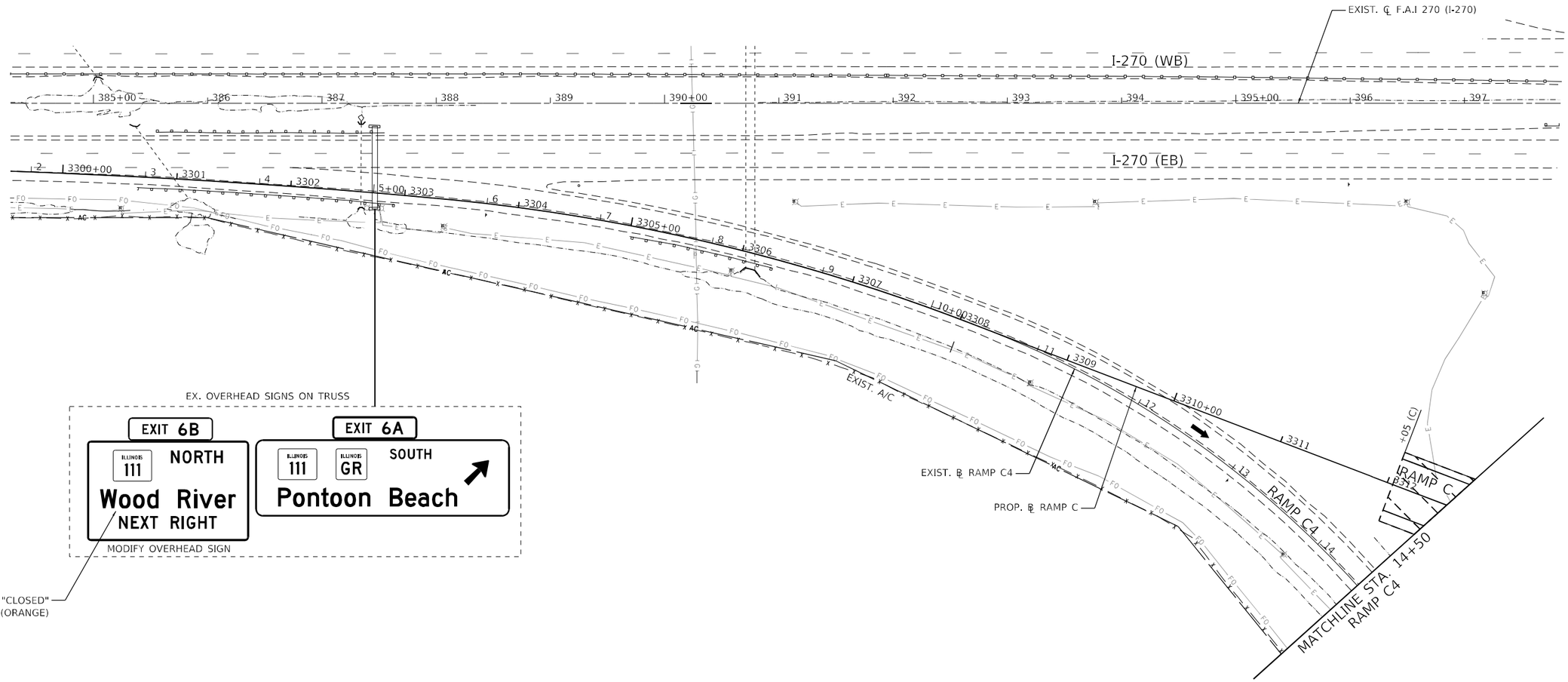

LEGEND

- DIRECTION OF TRAFFIC
- TYPE II BARRICADES, DRUMS, OR VERTICAL PANEL POST
- TYPE III BARRICADE
- TEMPORARY CONCRETE BARRIER
- IMPACT ATTENUATOR, TEMPORARY (SEVERE USE, NARROW), TEST LEVEL 3
- TEMPORARY PAVEMENT
- WORK ZONE

N

50' 0 50' 100'
SCALE: 1" = 50'

MODEL: Default
FILE NAME: 2:\17049 IDOT CMT I-270 Phase 1\DGN\Design\Final\Plotsheets\031-0800917_ON_staging-STG1 RAMPC.dgn

USER NAME = jdardeen	DESIGNED - JRD	REVISED -	
	DRAWN - JRD	REVISED -	
PLOT SCALE = 100.0000 ' / in.	CHECKED - SLD	REVISED -	
PLOT DATE = 6/4/2024	DATE - 6/4/2024	REVISED -	

STATE OF ILLINOIS
DEPARTMENT OF TRANSPORTATION

MAINTENANCE OF TRAFFIC - STAGE 1
F.A.P. 582 (IL 111) - RAMP C

SCALE: 1" = 50' | SHEET 31 OF 87 SHEETS | STA. TO STA.

F.A.I. RTE.	SECTION	COUNTY	TOTAL SHEETS	SHEET NO.
270	60-3K-1	MADISON	576	97
		CONTRACT NO. 76818		
		ILLINOIS FED. AID PROJECT		

LEGEND

- DIRECTION OF TRAFFIC
- TYPE II BARRICADES, DRUMS, OR VERTICAL PANEL POST
- TYPE III BARRICADE
- TEMPORARY CONCRETE BARRIER
- IMPACT ATTENUATOR, TEMPORARY (SEVERE USE, NARROW), TEST LEVEL 3
- TEMPORARY PAVEMENT
- WORK ZONE

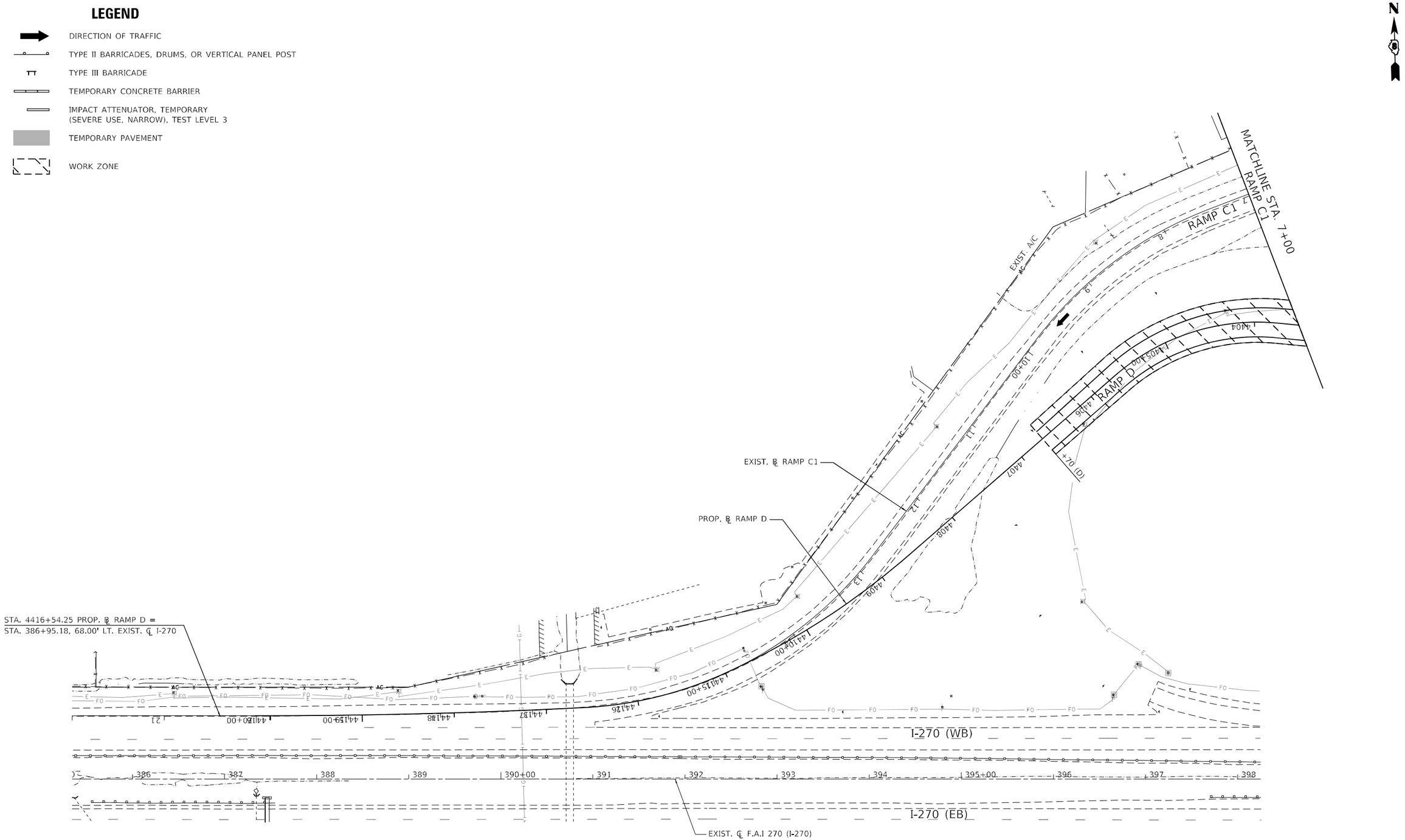

USER NAME = jdardeen	DESIGNED - JRD	REVISED -	
	DRAWN - JRD	REVISED -	
PLOT SCALE = 100.0000 ' / in.	CHECKED - SLD	REVISED -	
PLOT DATE = 6/4/2024	DATE - 6/4/2024	REVISED -	

STATE OF ILLINOIS
DEPARTMENT OF TRANSPORTATION

MAINTENANCE OF TRAFFIC - STAGE 1
F.A.P. 582 (IL 111) - RAMP D

SCALE: 1" = 50' | SHEET 32 OF 87 SHEETS | STA. 7+00 TO STA. 22+00

F.A.I. RTE.	SECTION	COUNTY	TOTAL SHEETS	SHEET NO.
270	60-3K-1	MADISON	576	98
		CONTRACT NO. 76818		
		ILLINOIS FED. AID PROJECT		

MODEL: Default
FILE NAME: Z:\17049 IDOT C4T I-270 Phase I\DGN\Design\Final\Plansheets\032-080097 Alt 4staging-STG1_RAMPD.dgn

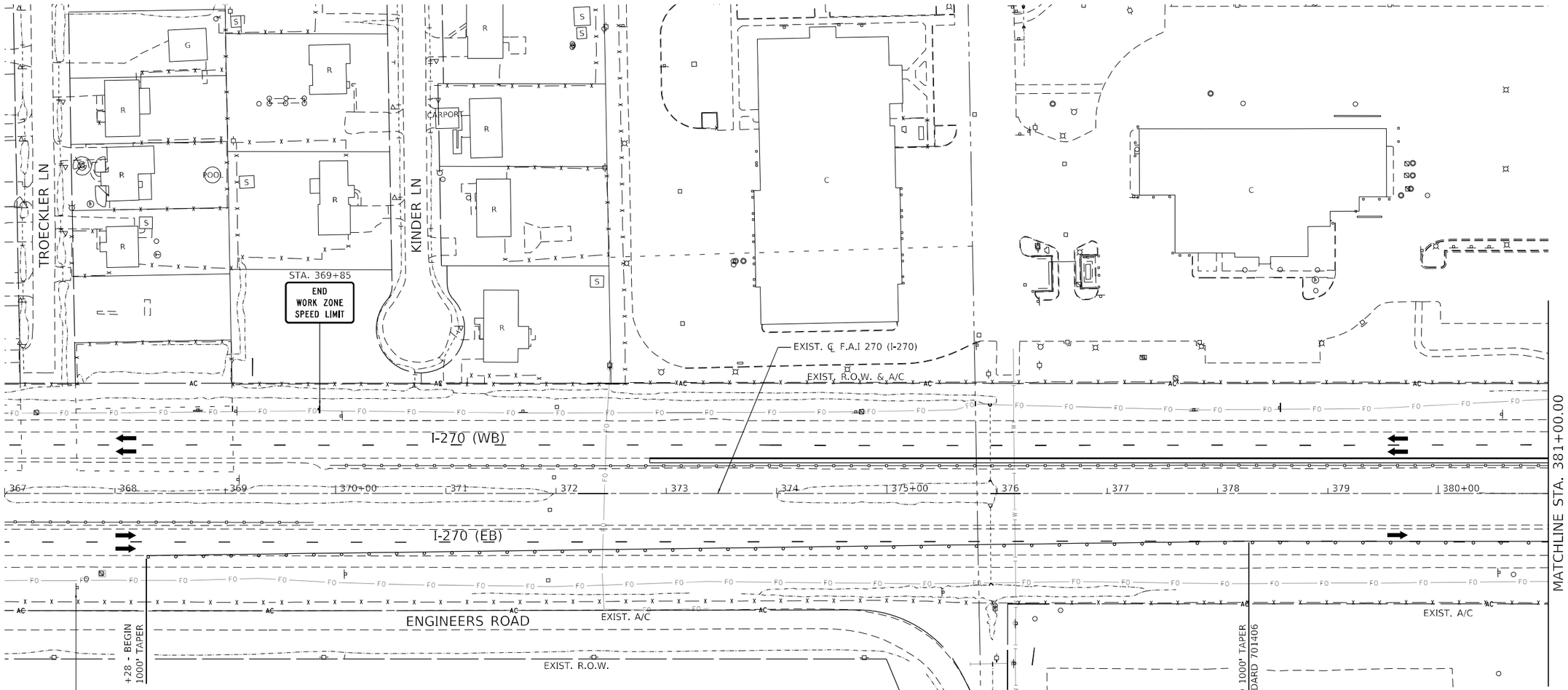

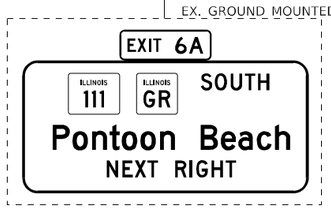

EX. OVERHEAD SIGNS ON TRUSS LOCATED EAST OF BRIDGE OVER IL ROUTE 203

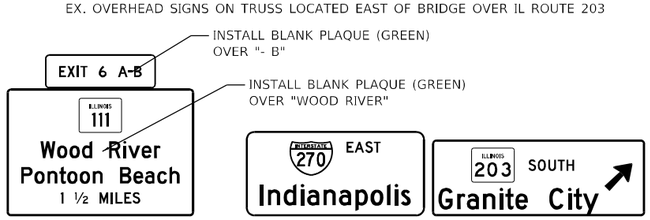

MODIFY OVERHEAD SIGN

LEGEND

- DIRECTION OF TRAFFIC
- TYPE II BARRICADES, DRUMS, OR VERTICAL PANEL POST
- TYPE III BARRICADE
- TEMPORARY CONCRETE BARRIER
- IMPACT ATTENUATOR, TEMPORARY (SEVERE USE, NARROW), TEST LEVEL 3
- TEMPORARY PAVEMENT
- WORK ZONE

50' 0 50' 100'
SCALE: 1" = 50'

MODEL: Default
FILE NAME: 7217049 IDOT CMT I-270 Phase 2 DGN\Design Files\Matchsheets\033-0200917_gm_staging-STG1_270_007.dgn

USER NAME = jdardeen	DESIGNED - JRD	REVISED -	
	DRAWN - JRD	REVISED -	
PLOT SCALE = 100.0000 ' / in.	CHECKED - SLD	REVISED -	
PLOT DATE = 6/4/2024	DATE - 6/4/2024	REVISED -	

STATE OF ILLINOIS
DEPARTMENT OF TRANSPORTATION

MAINTENANCE OF TRAFFIC - STAGE 1
F.A.I. 270 (I-270)

SCALE: 1" = 50' | SHEET 33 OF 87 SHEETS | STA. 367+00 TO STA. 381+00

F.A.I. RTE.	SECTION	COUNTY	TOTAL SHEETS	SHEET NO.
270	60-3K-1	MADISON	576	99
		CONTRACT NO. 76818		
		ILLINOIS	FED. AID PROJECT	

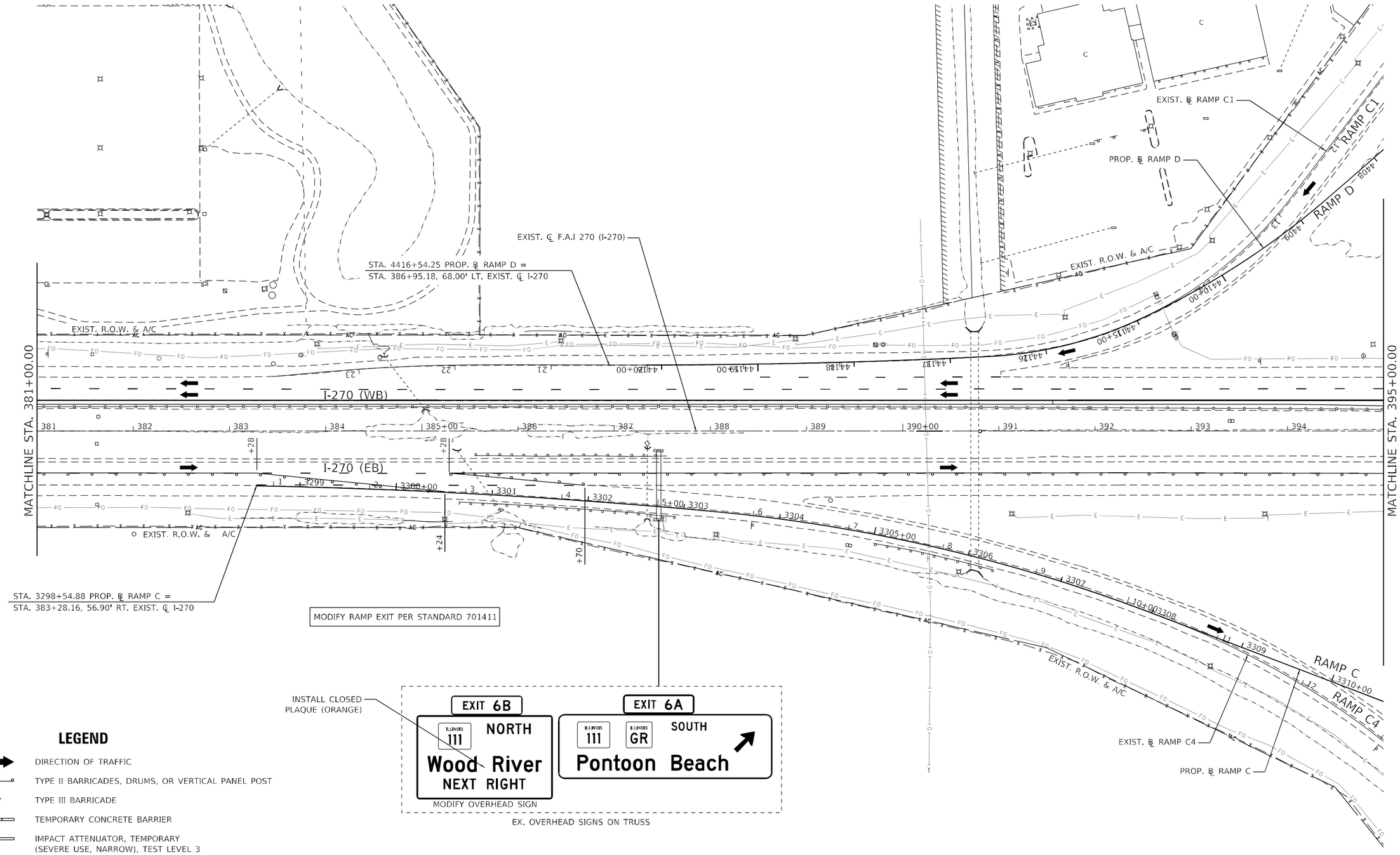

MODEL: Default
FILE NAME: 76170049 IDOT CMT I-270 Phase 1 DGN\Design\Fins\Mot-sheets\034-0080917_sht_staging-STC1_270_008.dgn

USER NAME = jdardeen	DESIGNED - JRD	REVISED -	
	DRAWN - JRD	REVISED -	
PLOT SCALE = 100.0000 ' / in.	CHECKED - SLD	REVISED -	
PLOT DATE = 6/4/2024	DATE - 6/4/2024	REVISED -	

STATE OF ILLINOIS
DEPARTMENT OF TRANSPORTATION

MAINTENANCE OF TRAFFIC - STAGE 1
F.A.I. 270 (I-270)

SCALE: 1" = 50' | SHEET 34 OF 87 SHEETS | STA. 381+00 TO STA. 395+00

F.A.I. RTE.	SECTION	COUNTY	TOTAL SHEETS	SHEET NO.
270	60-3K-1	MADISON	576	100
		CONTRACT NO. 76818		
		ILLINOIS FED. AID PROJECT		