08-02-2024 LETTING ITEM 027

F.A. RTE.	SECTION	COUNTY	TOTAL SHEETS	SHEET NO.
*	(55,56)RS-5,57-1(1)RS-1	MCLEAN	85	1
	ILLINOIS	CONTRACT NO. 70G11		

* OR 2; FAS 1476; FAU 6380

STATE OF ILLINOIS
DEPARTMENT OF TRANSPORTATION

INDEX OF SHEETS

PROPOSED HIGHWAY PLANS

OR 2; FAU 6380; FAS 1476 / (OLD US 51)
SECTION (55,56)RS-5,57-1(1)RS-1
PROJECT STP-DR3V(364)
SMART OVERLAY WITH ADA IMPROVEMENTS
2.5 MILES S OF I-74 TO 1 MILE S OF HEYWORTH
MCLEAN COUNTY

D-95-004-23

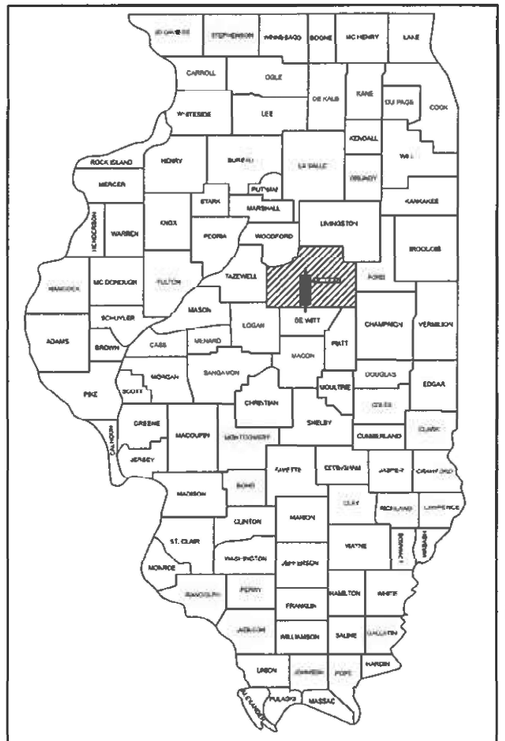

LOCATION OF SECTION INDICATED THUS: -

FUNCTIONAL CLASSIFICATION

MAJOR COLLECTOR, 2 LANES

LEG A 2023 ADT = 550
P.V = 94.5% S.U. = 3.1% MU = 2.4%
LEG B 2023 ADT = 825
P.V = 92.8% S.U. = 3.6% MU = 3.6%
LEG C 2023 ADT = 1,050
P.V = 92.3% S.U. = 2.9% MU = 4.7%
LEG D 2023 ADT = 1,700
P.V = 92.4% S.U. = 4.7% MU = 2.9%

LOCAL ROAD, 2 LANES

LEG E 2023 ADT = 900
P.V = 92.2% S.U. = 5.6% MU = 2.2%
LEG F 2023 ADT = 400
P.V = 96.2% S.U. = 2.3% MU = 1.5%

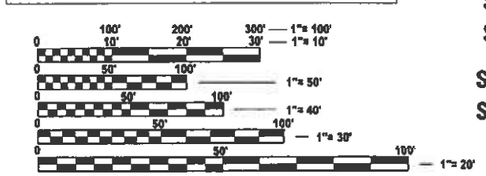

FULL SIZE PLANS HAVE BEEN PREPARED USING STANDARD ENGINEERING SCALES. REDUCED SIZED PLANS WILL NOT CONFORM TO STANDARD SCALES. IN MAKING MEASUREMENTS ON REDUCED PLANS, THE ABOVE SCALES MAY BE USED.

J.U.L.I.E.
JOINT UTILITY LOCATION INFORMATION FOR EXCAVATION
1-800-892-0123 OR 811
TOWNSHIPS 21N, 22N, & 23N, RANGE 2E OF 3RD PM

C-95-015-23

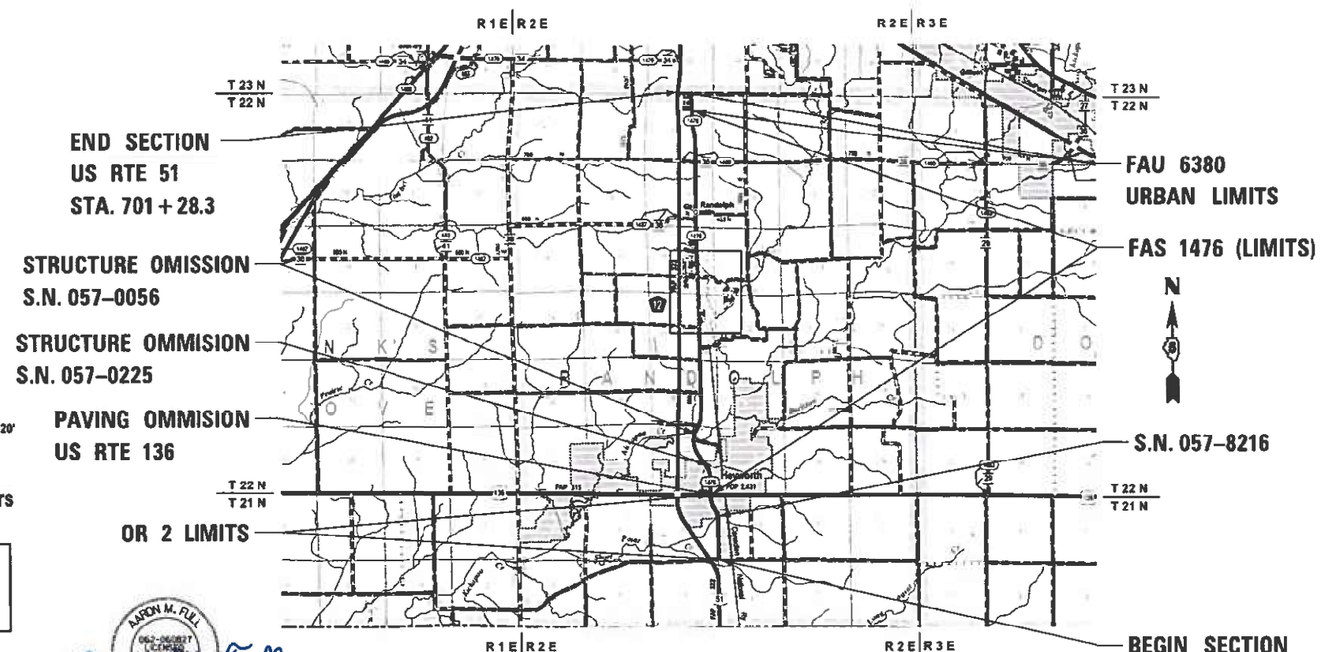

LOCATION MAP
NOT TO SCALE

GROSS LENGTH = 39,124.80 FT. = 7.41 MILE
NET LENGTH = 38,731.92 FT. = 7.36 MILE

STATE OF ILLINOIS
DEPARTMENT OF TRANSPORTATION

SUBMITTED 3/20 2024
Kendall A. Garnett SUPN
REGIONAL ENGINEER

May 10, 2024
ENGINEER OF DESIGN AND ENVIRONMENT

May 10, 2024
Stephen M. Travis
DIRECTOR OF HIGHWAYS PROJECT IMPLEMENTATION

PROJECT ENGINEER: JASON W. STULTS, P.E.
PROJECT MANAGER: JASON GOBLE
PHONE: 217-465-4181

CONTRACT NO. 70G11

AARON M. FULL
062-060827
LICENSED
PROFESSIONAL
ENGINEER
STATE OF ILLINOIS

Aaron M. Full 3-19-24

AARON M. FULL, P.E.
STATE OF ILLINOIS NO. 062-060827
EXPIRES 11-30-2025

PRINTED BY THE AUTHORITY OF THE STATE OF ILLINOIS

REV. 5/6/24

GENERAL NOTES

G.N.-105.09A

ALL ELEVATIONS SHOWN IN THE PLANS ARE BASED ON NORTH AMERICAN VERTICAL DATUM OF 1988. (NAVD 88)

G.N.-406H

MIXTURE REQUIREMENTS

THE FOLLOWING MIXTURE REQUIREMENTS ARE APPLICABLE FOR THIS PROJECT:

LOCATION(S):	OLD US 51	OLD US 51	OLD US 51	OLD US 51
MIXTURE USE(S):	SURFACE COURSE (MAINLINE)	SURFACE COURSE (INCIDENTAL)	CLASS D PATCHES	HOT-MIX ASPHALT SHOULDERS
AC/PG	SBS PG 70-22	SBS PG 70-22	PG 64-22	PG 64-22
DESIGN AIR VOIDS	4.0% @ Ndes=50	4.0% @ Ndes=50	4.0% @ Ndes=50	4.0% @ Ndes=30
MIXTURE COMP (GRADATION)	IL 9.5	IL 9.5	IL 19.0	IL 9.5L
FRICTION AGGREGATE	Mix C	Mix C	N.A.	N.A.
MIXTURE WEIGHT	112	112	112	112
QUALITY MANAGEMENT PROGRAM	QCP	QC/QA	QC/QA	QC/QA
SUBLOT SIZE	1000	3000	3000	3000
MATERIAL TRANSFER DEVICE (REQUIRED?)	NO	NO	NO	NO

G.N.-406S

PROJECT POSTED SPEED LIMITS

THE FOLLOWING TABLE IS A LISTING OF POSTED SPEED LIMITS WITHIN THE PROJECT LIMITS
THE ENGINEER SHALL FIELD VERIFY THESE LIMITS:

STATION	TO	STATION	POSTED SPEED LIMIT	DESIGN SPEED LIMIT
54+57		85+16	55 MPH	55 MPH
85+16		96+75	35 MPH	35 MPH
96+75		106+45	30 MPH	30 MPH
107+45		122+39	30 MPH	30 MPH
122+39		129+66	35 MPH	35 MPH
129+66		139+06	45 MPH	45 MPH
139+06		222+75	55 MPH	55 MPH
222+75		289+67	50 MPH	50 MPH
289+67		418+28	55 MPH	55 MPH
418+28		435+16	45 MPH	45 MPH
701+28		710+73	45 MPH	45 MPH

G.N.-440B

THE EXISTING TIE BARS BETWEEN THE EXISTING MEDIANS, GUTERS AND/OR COMBINATION CURB AND GUTTERS THAT ARE FOUND SUITABLE FOR REUSE SHALL BE CLEANED, STRAIGHTENED AND INCORPORATED INTO THE NEW CONSTRUCTION. ANY EXISTING TIE BARS THAT ARE FOUND UNSUITABLE TO BE INCORPORATED INTO THE PROPOSED CONSTRUCTION DUE TO EXCESSIVE RUSTING OR DISTRESS SHALL BE REMOVED FLUSH WITH THE FACE OF THE EXISTING CONCRETE AND DISPOSED OF OUTSIDE THE LIMITS OF THE RIGHT-OF-WAT IN ACCORDANCE WITH ARTICLE 202.03 OF THE STANDARD SPECIFICATIONS.

THIS WORK WILL NOT BE PAID FOR SEPARATELY BUT SHALL BE CONSIDERED INCLUDED IN THE VARIOUS REMOVAL PAY ITEMS AND NO ADDITIONAL COMPENSATION WILL BE ALLOWED.

G.N.-551

EXISTING STORM SEWERS SHALL BE REMOVED IN ACCORDANCE WITH SECTION 551 OF THE STANDARD SPECIFICATIONS EXCEPT THAT THE CONTRACTOR WILL NOT BE REQUIRED TO SALVAGE ANY EXISTING SEWER PIPE.

G.N.-703A

SHORT TERM PAVEMENT MARKING SHALL BE APPLIED TO THE PAVEMENT AFTER ANY OF THE FOLLOWING: PAVEMENT MARKING REMOVAL, COLD MILLING AND/OR PLACEING BITUMINOUS MATERIALS (TACK COAT), LEVELING BINDER (MACHINE METHOD), BINDER AND SURFACE COURSES. SHORT TERM PAVEMENT MARKING PLACED ON THE SURFACE SHALL COINCIDE WITH THE FINAL PAVEMENT STRIPING. SHORT TERM PAVEMENT MARKING PLACED PRIOR TO THE SURFACE SHALL COINCIDE WITH THE EXISTING PAVEMENT MARKINGS. USE 4 FEET PER 40 FEET (OR 10% PER STATION).

G.N.-781

THE FINAL PAVEMENT MARKINGS SHALL BE IN PLACE PRIOR TO PLACING THE RAISED REFLECIVE PAVEMENT MARKERS.

HIGHWAY STANDARDS

STANDARD NO.	DESCRIPTION
000001-08	STANDARD SYMBOLS, ABBREVIATIONS AND PATTERNS
001006	DECIMAL OF AN INCH AND OF A FOOT
280001-07	TEMPORARY EROSION CONTROL SYSTEMS
406201-01	MAILBOX TURN OUT
420001-10	PAVEMENT JOINTS
424001-11	PERPENDICULAR CURB RAMPS FOR SIDEWALKS
424011-04	CORNER PARALLEL CURB RAMPS FOR SIDEWALKS
442201-03	CLASS C AND D PATCHES
602301-04	INLET, TYPE A
602401-07	PRECAST MANHOLE, TYPE A, 4' DIAMETER
604001-05	FRAME AND LIDS, TYPE 1
604006-05	FRAME AND GRATE, TYPE 3
604036-03	GRATE, TYPE 8
606001-08	CONCRETE CURB TYPE B AND COMBINATION CONCRETE CURB AND GUTTER
630001-13	STEEL PLATE BEAM GUARDRAIL
630301-09	SHOULDER WIDENING FOR TYPE 1 (SPECIAL) GUARDRAIL TERMINALS
701006-05	OFF-ROAD OPERATIONS, 2L, 2W. 15' (4.5 M) TO 24" (600MM) FROM PAVEMENT EDGE
701011-04	OFF-ROAD MOVING OPERATIONS, 2L, 2W. DAY ONLY
701201-05	LANE CLOSURE, 2L, 2W. DAY ONLY, FOR SPEED > 45 MPH
701301-04	LANE CLOSURE, 2L, 2W. SHORT TIME OPERATIONS
701306-04	LANE CLOSURE, 2L, 2W. SLOW MOVING OPERATIONS DAY ONLY, FOR SPEEDS > 45 MPH
701311-03	LANE CLOSURE, 2L, 2W. MOVING OPERATIONS DAY ONLY
701501-06	URBAN LANE CLOSURE, 2L, 2W. UNDIVIDED
701801-06	SIDEWALK CORNER OR CROSSWALK CLOSURE
701901-09	TRAFFIC CONTROL DEVICES
725001-01	OBJECT AND TERMINAL MARKERS
780001-05	TYPICAL PAVEMENT MARKINGS
781001-04	TYPICAL APPLICATIONS RAISED REFLECTVE PAVEMENT MARKERS
782006-01	GUARDRAIL AND BARRIER WALL REFLECTOR MOUNTING DETAILS

COMMITMENTS

ALL PROPOSED WORK OFF OF THE ROADWAY IN THE SW CORNER OF VINE STREET AND RANDOLPH STREET SHALL BE COMPLETED WITHIN THREE (3) WEEKS OF DISTURBANCE.

SUMMARY OF QUANTITIES

	CODE NO.	ITEM	UNIT	TOTAL QUANTITY	OR 2 (OLD US 51) MCLEAN COUNTY STA. 54+57 TO STA. 106+54 2 LANE	FAS 1476 (OLD US 51) MCLEAN COUNTY STA. 107+45 TO STA. 147+58 2 LANE	FAS 1476 (OLD US 51) MCLEAN COUNTY STA. 147+58 TO STA. 420+58 2 LANE	FAU 6380 (OLD US 51) MCLEAN COUNTY STA. 420+58 TO STA.435+16 & STA. 701+28 TO STA. 710+73 2 LANE
					CONSTRUCTION CODE			
					80% FED 20% STATE	80% FED 20% STATE	80% FED 20% STATE	80% FED 20% STATE
					ROADWAY	ROADWAY	ROADWAY	ROADWAY
					0005	0005	0005	0005
					RURAL	RURAL	RURAL	URBAN
	20400800	FURNISHED EXCAVATION	CU YD	140			140	
	20800150	TRENCH BACKFILL	CU YD	21		21		
	21101615	TOPSOIL FURNISH AND PLACE, 4"	SQ YD	1210			1210	
	25000210	SEEDING, CLASS 2A	ACRE	0.25			0.25	
	25000400	NITROGEN FERTILIZER NUTRIENT	POUND	23			23	
	25000500	PHOSPHOROUS FERTILIZER NUTRIENT	POUND	23			23	
	25000600	POTASSIUM FERTILIZER NUTRIENT	POUND	23			23	
	25100630	EROSION CONTROL BLANKET	SQ YD	1210			1210	
	28000250	TEMPORARY EROSION CONTROL SEEDING	POUND	25			25	
	28000400	PERIMITER EROSION BARRIER	FOOT	1154			1154	
	28000510	INLET FILTERS	EACH	32	8	22	2	
	40600290	BITUMINOUS MATERIALS (TACK COAT)	POUND	56984	8451	6220	39171	3142
	40600370	LONGITUDINAL JOINT SEALANT	FOOT	42163	8279	4494	26997	2393
	40600990	TEMPORARY RAMP	SQ YD	1058	182	177	609	90
	40604150	POLYMERIZED HOT-MIX ASPHALT SURFACE COURSE, IL-9.5, MIX "C" N50	TON	10124	1525	1053	6979	567
	40800050	INCIDENTAL HOT-MIX ASPHALT SURFACING	TON	487	53	144	271	19
	42300400	PORTLAND CEMENT CONCRETE DRIVEWAY PAVEMENT, 8 INCH	SQ YD	28		28		
	42400200	PORTLAND CEMENT CONCRETE SIDEWALK, 5 INCH	SQ FT	2576		2576		
*	42400800	DETECTABLE WARNINGS	SQ FT	212		212		
	44000155	HOT-MIX ASPHALT SURFACE REMOVAL, 1 1/2"	SQ YD	121364	18148	12537	83925	6754
	44000200	DRIVEWAY PAVEMENT REMOVAL	SQ YD	38		38		
	44000500	COMBINATION CURB AND GUTTER REMOVAL	FOOT	637		637		
	44000600	SIDEWALK REMOVAL	SQ FT	1667		1667		
	44201803	CLASS D PATCHES, TYPE II, 13 INCH	SQ YD	368	47	16	305	
	44201823	CLASS D PATCHES, TYPE I, 15 INCH	SQ YD	3		3		

* DENOTES SPECIALTY ITEM

MODEL: Border
FILE NAME: S:\PROJECTS\2023\1371D23_IDOTD5\WO 1 Contract 70G11\DESIGN_70G11\CAD_Sheets\WHAID570G11_Border.dgn

WILLETT HOFMANN & ASSOCIATES INC
PROFESSIONAL ENGINEERS LAND SURVEYORS
801 EAST DIVISION STREET, DANVILLE, ILLINOIS 61832
T: 815 284 3381 DESIGN FIRM: # 184 000918

USER NAME = afull	DESIGNED - AMF	REVISED -	
	DRAWN - TJA	REVISED -	
PLOT SCALE = 0.16666633 ' / in.	CHECKED - GFS	REVISED -	
PLOT DATE = 3/5/2024	DATE -	REVISED -	

STATE OF ILLINOIS
DEPARTMENT OF TRANSPORTATION

SUMMARY OF QUANTITIES

SCALE: N/A | SHEET 1 OF 3 SHEETS | STA. TO STA.

F.A. RTE.	SECTION	COUNTY	TOTAL SHEETS	SHEET NO.
*	(55/56)RS-5,57-1(1)RS-1	MCLEAN	85	3
		CONTRACT NO. 70G11		
		ILLINOIS	FED. AID PROJECT	

REV. 5/6/24

SUMMARY OF QUANTITIES

	CODE NO.	ITEM	UNIT	TOTAL QUANTITY	OR 2 (OLD US 51) MCLEAN COUNTY STA. 54+57 TO STA. 106+54 2 LANE	FAS 1476 (OLD US 51) MCLEAN COUNTY STA. 107+45 TO STA. 147+58 2 LANE	FAS 1476 (OLD US 51) MCLEAN COUNTY STA. 147+58 TO STA. 420+58 2 LANE	FAU 6380 (OLD US 51) MCLEAN COUNTY STA. 420+58 TO STA.435+16 & STA. 701+28 TO STA. 710+73 2 LANE
					CONSTRUCTION CODE			
					80% FED 20% STATE	80% FED 20% STATE	80% FED 20% STATE	80% FED 20% STATE
					ROADWAY	ROADWAY	ROADWAY	ROADWAY
					0005	0005	0005	0005
					RURAL	RURAL	RURAL	URBAN
	44201827	CLASS D PATCHES, TYPE II, 15 INCH	SQ YD	66		36		30
	48102100	AGGREGATE WEDGE SHOULDER, TYPE B	TON	1932	221	117	1462	132
	48203100	HOT-MIX ASPHALT SHOULDERS	TON	70			70	
	550A0050	STORM SEWERS, CLASS A, TYPE 1, 12"	FOOT	11		11		
	550A0340	STORM SEWERS, CLASS A, TYPE 2, 12"	FOOT	30		30		
	56109210	WATER VALVES TO BE ADJUSTED	EACH	13	3	10		
	60218500	MANHOLES, TYPE A, 4'-DIAMETER, TYPE 3 FRAME AND GRATE	EACH	1		1		
	60236200	INLETS, TYPE A, TYPE 8 GRATE	EACH	1		1		
	60255500	MANHOLES TO BE ADJUSTED	EACH	8		8		
	60255800	MANHOLES TO BE ADJUSTED WITH NEW TYPE 1 FRAME, CLOSED LID	EACH	1		1		
	60256400	MANHOLES TO BE ADJUSTED WITH NEW TYPE 8 GRATE	EACH	1		1		
	60260100	INLETS TO BE ADJUSTED	EACH	7		7		
	60604400	COMBINATION CONCRETE CURB AND GUTTER, TYPE B-6.18	FOOT	122		122		
*	63000003	STEEL PLATE BEAM GUARDRAIL, TYPE A, 9 FOOT POSTS	FOOT	1054			1054	
*	63100167	TRAFFIC BARRIER TERMINAL, TYPE 1 (SPECIAL) TANGENT	EACH	12			12	
	63200310	GUARDRAIL REMOVAL	FOOT	1303			1303	
*	66900200	NON-SPECIAL WASTE DISPOSAL	CU YD	260		260		
*	66900530	SOIL DISPOSAL ANALYSIS	EACH	6		6		
*	66901001	REGULATED SUBSTANCES PRE-CONSTRUCTION PLAN	L SUM	1		1		
*	66901003	REGULATED SUBSTANCES FINAL CONSTRUCTION REPORT	L SUM	1		1		
*	66901006	REGULATED SUBSTANCES MONITORING	CAL DA	21		21		
	67000500	ENGINEER'S FIELD OFFICE, TYPE B	CAL MO	6	1	1	3	1
	67100100	MOBILIZATION	L SUM	1	0.1	0.1	0.7	0.1
	70100450	TRAFFIC CONTROL AND PROTECTION, STANDARD 701201	L SUM	1	0.1	0.1	0.7	0.1
	70100460	TRAFFIC CONTROL AND PROTECTION, STANDARD 701306	L SUM	1	0.1	0.1	0.7	0.1

* DENOTES SPECIALTY ITEM

MODEL: Border
FILE NAME: S:\PROJECTS\2023\1371D23_IDOTD5\WO 1 Contract 70G11\DESIGN_70G11\CAD_Sheets\WHAID570G11_Border.dgn

WILLETT HOFMANN & ASSOCIATES INC
PROFESSIONAL ENGINEERS LAND SURVEYORS
801 EAST DIVISION STREET, DANVILLE, ILLINOIS 61832
T: 815 284 3381 FAX CONFIRM.: 217 840 9919

USER NAME = afull	DESIGNED - AMF	REVISED -	
	DRAWN - TJA	REVISED -	
PLOT SCALE = 0.16666633 ' / in.	CHECKED - GFS	REVISED -	
PLOT DATE = 3/5/2024	DATE -	REVISED -	

STATE OF ILLINOIS
DEPARTMENT OF TRANSPORTATION

SUMMARY OF QUANTITIES

SCALE: N/A | SHEET 2 OF 3 SHEETS | STA. TO STA.

F.A. RTE.	SECTION	COUNTY	TOTAL SHEETS	SHEET NO.
*	(55/56)RS-5,57-1(1)RS-1	MCLEAN	85	4
		CONTRACT NO. 70G11		
		ILLINOIS	FED. AID PROJECT	

REV. 5/6/24

SUMMARY OF QUANTITIES

	CODE NO.	ITEM	UNIT	TOTAL QUANTITY	OR 2 (OLD US 51) MCLEAN COUNTY STA. 54+57 TO STA. 106+54 2 LANE	FAS 1476 (OLD US 51) MCLEAN COUNTY STA. 107+45 TO STA. 147+58 2 LANE	FAS 1476 (OLD US 51) MCLEAN COUNTY STA. 147+58 TO STA. 420+58 2 LANE	FAU 6380 (OLD US 51) MCLEAN COUNTY STA. 420+58 TO STA.435+16 & STA. 701+28 TO STA. 710+73 2 LANE
					CONSTRUCTION CODE			
					80% FED 20% STATE	80% FED 20% STATE	80% FED 20% STATE	80% FED 20% STATE
					ROADWAY	ROADWAY	ROADWAY	ROADWAY
					0005	0005	0005	0005
					RURAL	RURAL	RURAL	URBAN
	70102620	TRAFFIC CONTROL AND PROTECTION, STANDARD 701501	L SUM	1	0.1	0.1	0.7	0.1
	70102640	TRAFFIC CONTROL AND PROTECTION, STANDARD 701801	L SUM	1	0.1	0.1	0.7	0.1
	70300100	SHORT TERM PAVEMENT MARKING	FOOT	11508	1548	1164	8088	708
	70300150	SHORT TERM PAVEMENT MARKING REMOVAL	SQ FT	3798	511	384	2669	234
	70300221	TEMPORARY PAVEMENT MARKING - LINE 4" - PAINT	FOOT	112154	13270	9408	81981	7495
	70300241	TEMPORARY PAVEMENT MARKING - LINE 6" - PAINT	FOOT	468		468		
	70300281	TEMPORARY PAVEMENT MARKING - LINE 24" - PAINT	FOOT	156	13	98		45
*	72400205	REMOVE & RELOCATE SIGN PANEL ASSEMBLY - TYPE A	EACH	3		3		
*	72501000	TERMINAL MARKER - DIRECT APPLIED	EACH	12			12	
*	78000400	THERMOPLASTIC PAVEMENT MARKING - LINE 6"	FOOT	468		468		
*	78000650	THERMOPLASTIC PAVEMENT MARKING - LINE 24"	FOOT	98		98		
*	78001110	PAINT PAVEMENT MARKING - LINE 4"	FOOT	112154	13270	9408	81981	7495
*	78001180	PAINT PAVEMENT MARKING - LINE 24"	FOOT	58	13			45
*	78011035	GROOVING FOR RECESSED PAVEMENT MARKING 7"	FOOT	468		468		
*	78011125	GROOVING FOR RECESSED PAVEMENT MARKING 25"	FOOT	98		98		
*	78100100	RAISED REFLECTIVE PAVEMENT MARKER	EACH	612	66	60	438	48
*	78200005	GUARDRAIL REFLECTORS, TYPE A	EACH	30			30	
	X0323455	ADJUST MONITORING WELL	EACH	1		1		
	X4400196	HOT-MIX ASPHALT SURFACE REMOVAL (SPECIAL)	SQ YD	5270	628	1283	3132	227
	X6061700	COMBINATION CONCRETE CURB AND GUTTER, TYPE B (SPECIAL)	FOOT	533		533		
	X8140115	HANDHOLE TO BE ADJUSTED	EACH	2		2		
*	XZ193400	SURVEY MARKER, TYPE 2 (SPECIAL)	EACH	31	8	3	15	5
Ø	Z0076600	TRAINEES	HOUR	1000	1,000			
	Z0013798	CONSTRUCTION LAYOUT	L SUM	1	0.1	0.1	0.7	0.1
Ø	Z0076604	TRAINEES - TRAINING PROGRAM GRADUATE	HOUR	1000	1,000			

* DENOTES SPECIALTY ITEM

Ø 0042

MODEL: Border
FILE NAME: S:\PROJECTS\2023\1371D23_IDOTD5\WO 1 Contract 70G11\DESIGN_70G11\CAD_Sheets\WHAID570G11_Border.dgn

WILLETT HOFMANN & ASSOCIATES INC
PROFESSIONAL ENGINEERS AND LAND SURVEYORS
801 EAST DIVISION STREET, DANVILLE, ILLINOIS 61832
T: 815 284 3381 DESIGN FIRM: # 184.000918

USER NAME = afull	DESIGNED - AMF	REVISED -	
	DRAWN - TJA	REVISED -	
PLOT SCALE = 0.16666633 ' / in.	CHECKED - GFS	REVISED -	
PLOT DATE = 3/5/2024	DATE -	REVISED -	

STATE OF ILLINOIS
DEPARTMENT OF TRANSPORTATION

SUMMARY OF QUANTITIES

SCALE: N/A | SHEET 3 OF 3 SHEETS | STA. TO STA.

F.A. RTE.	SECTION	COUNTY	TOTAL SHEETS	SHEET NO.
*	(55/56)RS-5,57-1(1)RS-1	MCLEAN	85	5
		CONTRACT NO. 70G11		
	ILLINOIS	FED. AID PROJECT		

REV. 5/6/24REV. 4/16/24

BENCHMARKS

BM #1 CHISELED SQUARE ON THE SW CORNER OF A.R.B.C.
26.8' LT
STA. 64+10.59
ELEV. 727.90

BM #2 BOLT NEXT TO THE "O" IN THE WORD OPEN ON THE TOP RIM OF A FIRE HYDRANT IN THE SE CORNER OF VINE ST. (OLD US 51) AND SULLIVAN ST.
28.4' RT
STA. 103+23.70
ELEV. 751.13

BM #3 BOLT NEXT TO THE "I" IN THE WORD IRON ON THE TOP RIM OF A FIRE HYDRANT
31.8' RT
STA. 122+94.53
ELEV. 742.45

BM #4 CHISELED SQUARE ON THE NW CORNER OF THE NE WINGWALL OF STRUCTURE #057-0056
22.5' RT
STA. 160+72.46
ELEV. 702.16

BM #5 DISK SET IN THE EAST HEADWALL OF STRUCTURE # 057-8234
20.3' RT
STA. 212+55.46
ELEV. 724.53

BM #6 DISK SET IN THE SOUTH END OF THE EAST HEADWALL OF STRUCTURE # 057-8230
20.4' RT
STA. 269+86.54
ELEV. 732.96

BM #7 DISK SET IN THE SOUTH END OF THE EAST HEADWALL OF STRUCTURE # 057-8232
21.4' RT
STA. 308+38.75
ELEV. 749.66

BM #8 CHISELED SQUARE ON THE NW CORNER OF THE WEST HEADWALL OF A.R.B.C.
18.4' LT
STA. 364+72.39
ELEV. 775.01

BM #9 CHISELED SQUARE ON THE EAST END OF A CONCRETE PIPE CULVERT
50.2' RT
STA. 434+64.46
ELEV. 798.25

OLD U.S. RTE 51 CENTERLINE CONTROL

PT NO	NORTHING	EASTING	STATION	OFFSET	CODE	DESCR	TYPE	PT NO	NORTHING	EASTING	STATION	OFFSET	CODE	DESCR	TYPE
101	1323063.478	804534.224	54+44.58	0.00	803		MAG NAIL	PTC88	1341539.900	803000.252	244+87.48	0.00	835		MAG NAIL
5	1323137.699	804533.464	55+18.80	0.00	820		MAG NAIL	PCC89	1343169.503	802962.420	261+17.52	0.00	816		MAG NAIL
80	1323447.982	804530.289	58+29.10	0.00	820		MAG NAIL	C89	1343669.369	802950.816	266+17.51	1.91	820		MAG NAIL
81	1325355.100	804502.273	77+36.43	0.00	820		MAG NAIL	PTC89	1344168.998	802931.561	271+17.50	0.00	835		MAG NAIL
PC10	1326209.169	804489.020	85+90.60	0.00	816		MAG NAIL	44	1344753.519	802909.042	277+02.46	0.00	820		MAG NAIL
10	1326709.109	804481.262	90+81.42	58.82	820		OFF PVMNT	PCC90	1349660.092	802726.750	326+12.41	0.00	816		MAG NAIL
PT10	1327151.696	804248.632	95+72.25	0.00	835		MAG NAIL	C90	1350122.862	802709.557	330+75.35	-7.20	820		MAG NAIL
PC82	1327359.569	804139.372	98+07.09	0.00	816		MAG NAIL	PTC90	1350585.806	802721.150	335+38.29	0.00	835		MAG NAIL
82	1327757.898	803930.005	102+49.16	-51.85	820		OFF PVMNT	PCC91	1350889.276	802728.750	338+41.86	0.00	816		MAG NAIL
PT82	1328207.756	803918.709	106+91.24	0.00	835		MAG NAIL	C91	1351389.119	802741.266	343+41.81	4.09	820		MAG NAIL
PC83	1329743.031	803880.159	122+27.00	0.00	816		MAG NAIL	PTC91	1351889.105	802737.423	348+41.77	0.00	835		MAG NAIL
83	1330140.928	803870.167	126+13.44	59.06	820		OFF PVMNT	92	1354936.436	802713.997	378+89.19	0.00	820		MAG NAIL
PT83	1330466.178	803640.747	129+99.88	0.00	835		MAG NAIL	PC139	1356709.429	802689.023	396+62.36	0.00	816		MAG NAIL
PC85	1331496.015	802914.334	142+60.13	0.00	816		MAG NAIL	139	1357040.541	802684.359	399+92.15	18.34	820		OFF PVMNT
85	1332475.556	802223.399	153+31.10	-344.33	820		OFF PVMNT	PT139	1357362.553	802607.131	403+21.94	0.00	835		MAG NAIL
PT85	1333524.889	802802.874	164+02.06	0.00	835		MAG NAIL	PC140	1357583.987	802554.025	405+49.66	0.00	816		MAG NAIL
PC86	1333719.977	802910.607	166+24.92	0.00	816		MAG NAIL	140	1357895.231	802479.381	408+68.63	-16.21	820		OFF PVMNT
86	1334180.092	803164.697	171+38.13	70.15	820		OFF PVMNT	PT140	1358215.125	802468.818	411+87.61	0.00	835		MAG NAIL
PT86	1334705.523	803150.935	176+51.35	0.00	835		MAG NAIL	68	1359923.903	802412.396	428+97.32	0.00	820		MAG NAIL
SWR14	1335536.901	803129.160	184+83.01	0.00	820		MAG NAIL	PC144	1360103.070	802405.291	430+76.63	0.00	816		MAG NAIL
PCC87	1338583.617	803050.431	215+30.74	0.00	816		MAG NAIL	144	1360281.668	802398.209	432+54.20	12.50	820		MAG NAIL
C87	1339252.646	803033.143	221+99.98	-2.33	820		MAG NAIL	PT144	1360451.390	802342.161	434+31.77	0.00	835		MAG NAIL
PTC87	1339921.851	803025.173	228+69.23	0.00	835		MAG NAIL	145	1360531.777	802315.615	435+16.43	0.00	803		MAG NAIL
PCC88	1340540.070	803017.810	234+87.49	0.00	816		MAG NAIL								
C88	1341040.035	803011.856	239+87.48	1.41	820		MAG NAIL								

TIE POINTS

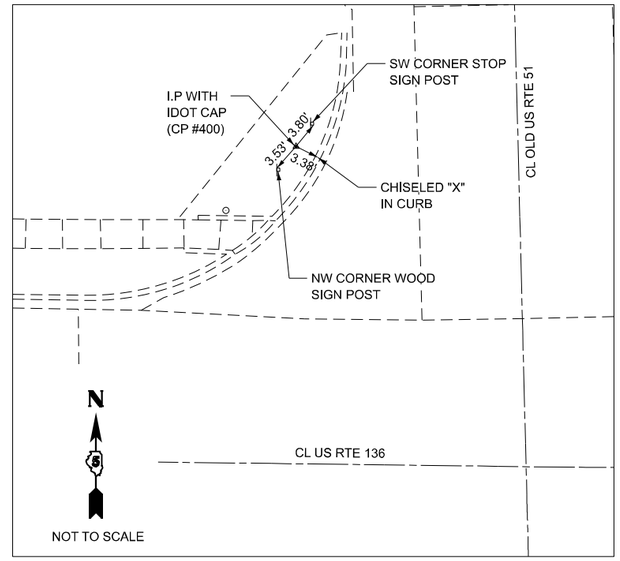

CONTROL POINT #400
STA. 107+37.90
29.3' LT
ELEV. 753.87

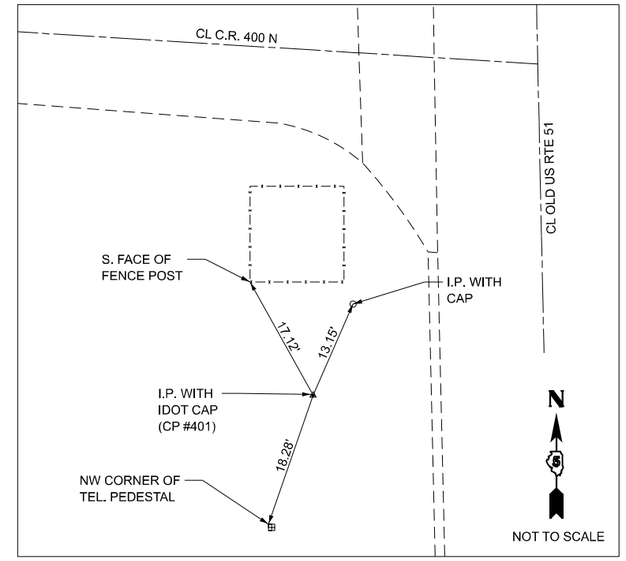

CONTROL POINT #401
STA. 219+46.15
30.6' LT
ELEV. 736.75

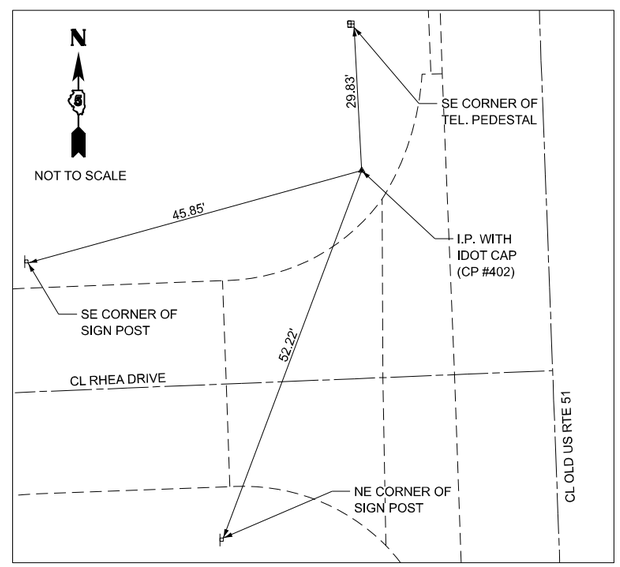

CONTROL POINT #402
STA. 314+62.40
24.2' LT
ELEV. 761.69

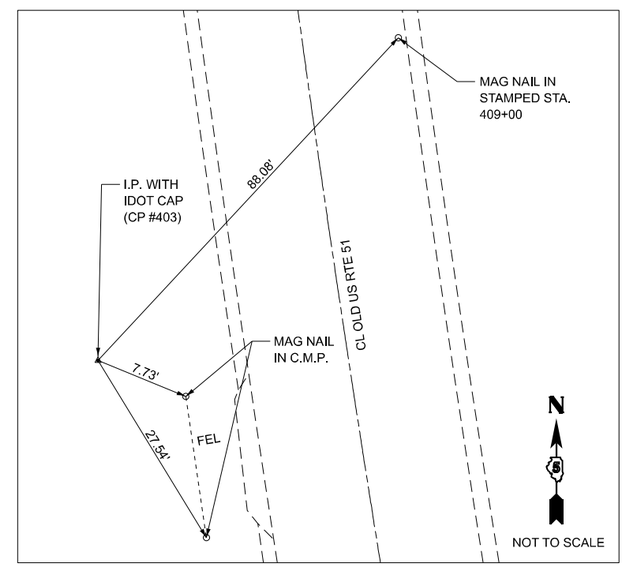

CONTROL POINT #403
STA. 408+19.53
32.7' LT
ELEV. 788.50

MODEL: Border
FILE NAME: S:\PROJECTS\2023\1371D23_IDOTD5\WO 1 Contract 70G11\DESIGN_70G11\CAD_Sheets\WHAID570G11_Border.dgn

WILLETT HOFMANN & ASSOCIATES, INC.
809 EAST 2ND STREET, DIXON, IL 61021-0367
T: 815-284-3381 DESIGN@WHA.C: 815-900918

USER NAME = afull	DESIGNED - AMF	REVISED -	
	DRAWN - AMF	REVISED -	
PLOT SCALE = 0.16666633 ' / in.	CHECKED - GFS	REVISED -	
PLOT DATE = 3/5/2024	DATE -	REVISED -	

STATE OF ILLINOIS
DEPARTMENT OF TRANSPORTATION

BENCHMARKS, TIES, & CENTERLINE CONTROL

SCALE: N.T.S. | SHEET 1 OF 1 SHEETS | STA. TO STA.

F.A. RTE.	SECTION	COUNTY	TOTAL SHEETS	SHEET NO.
*	(55/56)RS-5,57-1(1)RS-1	MCLEAN	85	6
		CONTRACT NO. 70G11		
	ILLINOIS	FED. AID PROJECT		

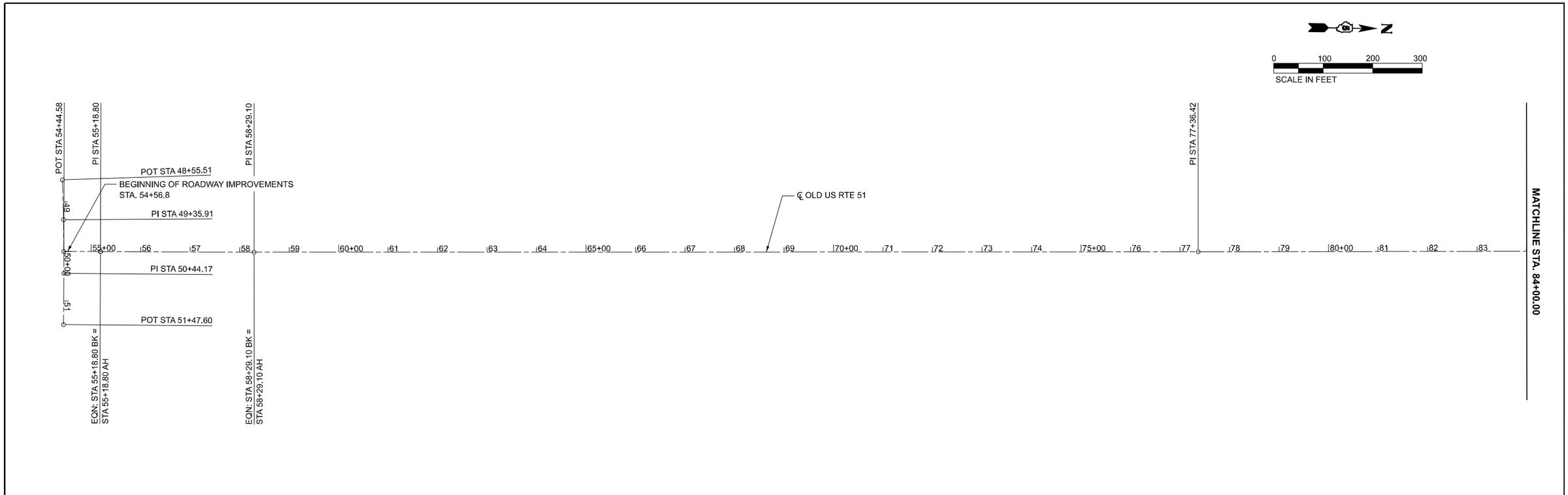

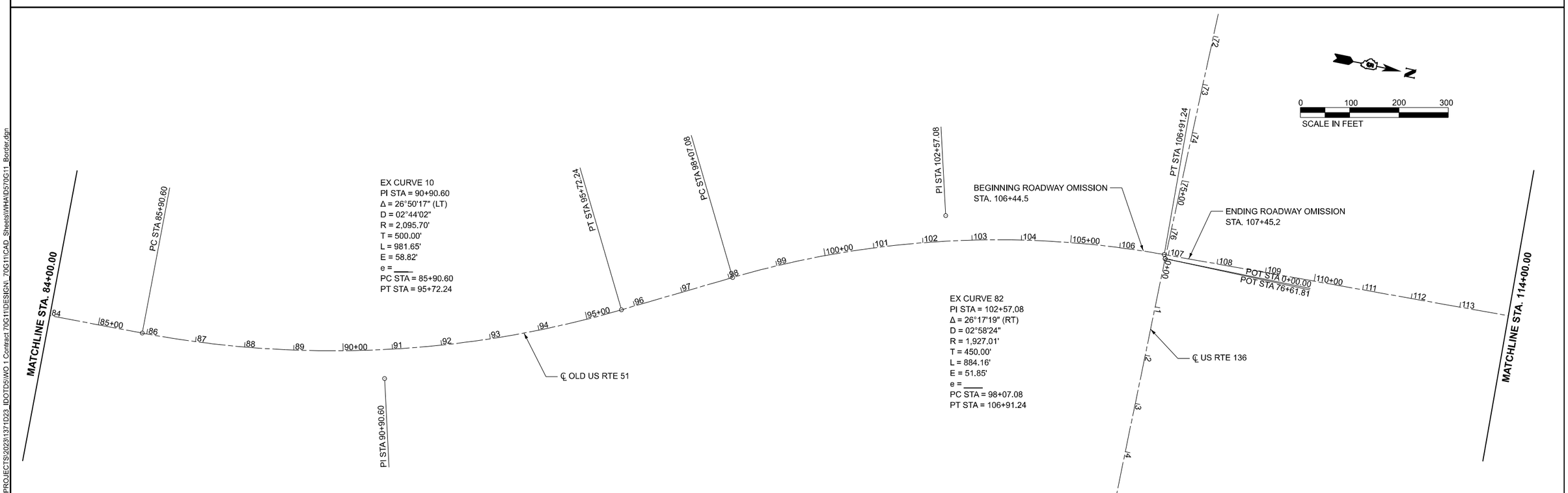

MODEL: Border
FILE NAME: S:\PROJECTS\2023\3710\23_IDOT05\WO 1 Contract 70G11\DESIGN_70G11\CAD_Sheets\WHA\D570G11_Border.dgn

WILLETT HOFMANN & ASSOCIATES INC
ENGINEERING ARCHITECTURE LAND SURVEYING
809 EAST 200 STREET, 2 NORTH, IL 61821-0367
T 217 239 3587 FAX CONTRACT 217 840 0019

USER NAME = afull	DESIGNED - AMF	REVISED -	
	DRAWN - AMF	REVISED -	
PLOT SCALE = 0.16666633 ' / in.	CHECKED - GFS	REVISED -	
PLOT DATE = 3/5/2024	DATE -	REVISED -	

STATE OF ILLINOIS
DEPARTMENT OF TRANSPORTATION

OR 2/FAS 1476 (OLD US RTE 51)
CENTERLINE ALIGNMENT

SCALE: 1"=100' | SHEET 1 OF 9 SHEETS | STA. 54+56.79 TO STA. 114+00.00

F.A. RTE.	SECTION	COUNTY	TOTAL SHEETS	SHEET NO.
*	(55/56)RS-5,57-1(1)RS-1	MCLEAN	85	7
		CONTRACT NO. 70G11		
	ILLINOIS	FED. AID PROJECT		

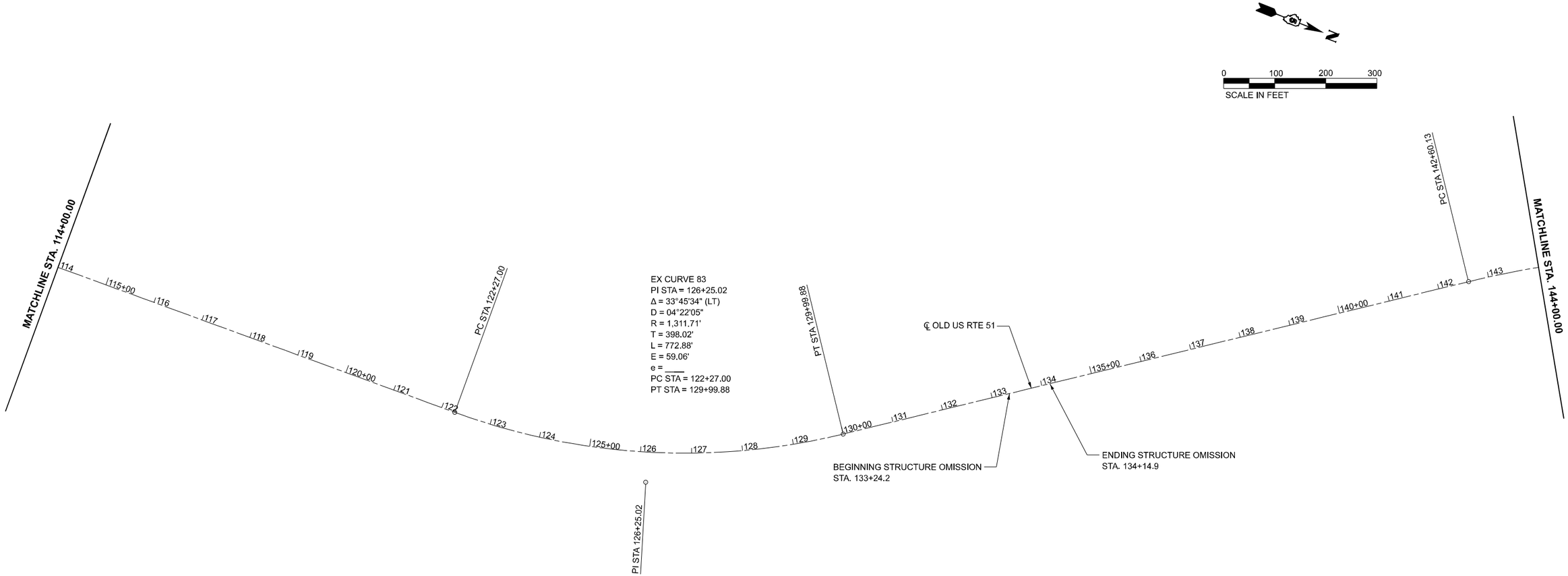

MODEL: Border
FILE NAME: S:\PROJECTS\2023\1371D23_IDOTD5\WO 1 Contract 70G11\DESIGN_70G11\CAD_Sheets\WHAID570G11_Border.dgn

WILLETT HOFMANN & ASSOCIATES INC
ENGINEERING ARCHITECTURE LANDSCAPE ARCHITECTURE
801 EAST 2ND STREET, DIXON, IL (815) 284-3381
T: 815 284 3381 DES CONTRACT: 184 000918

USER NAME = afull	DESIGNED - AMF	REVISED -	
	DRAWN - AMF	REVISED -	
PLOT SCALE = 0.16666633 ' / in.	CHECKED - GFS	REVISED -	
PLOT DATE = 3/5/2024	DATE -	REVISED -	

STATE OF ILLINOIS
DEPARTMENT OF TRANSPORTATION

FAS 1476 (OLD US RTE 51)
CENTERLINE ALIGNMENT

SCALE: 1"=100' | SHEET 2 OF 9 SHEETS | STA. 114+00.00 TO STA. 144+00.00

F.A. RTE.	SECTION	COUNTY	TOTAL SHEETS	SHEET NO.
*	(55/56)RS-5,57-1(1)RS-1	MCLEAN	85	8
		CONTRACT NO. 70G11		
	ILLINOIS	FED. AID PROJECT		

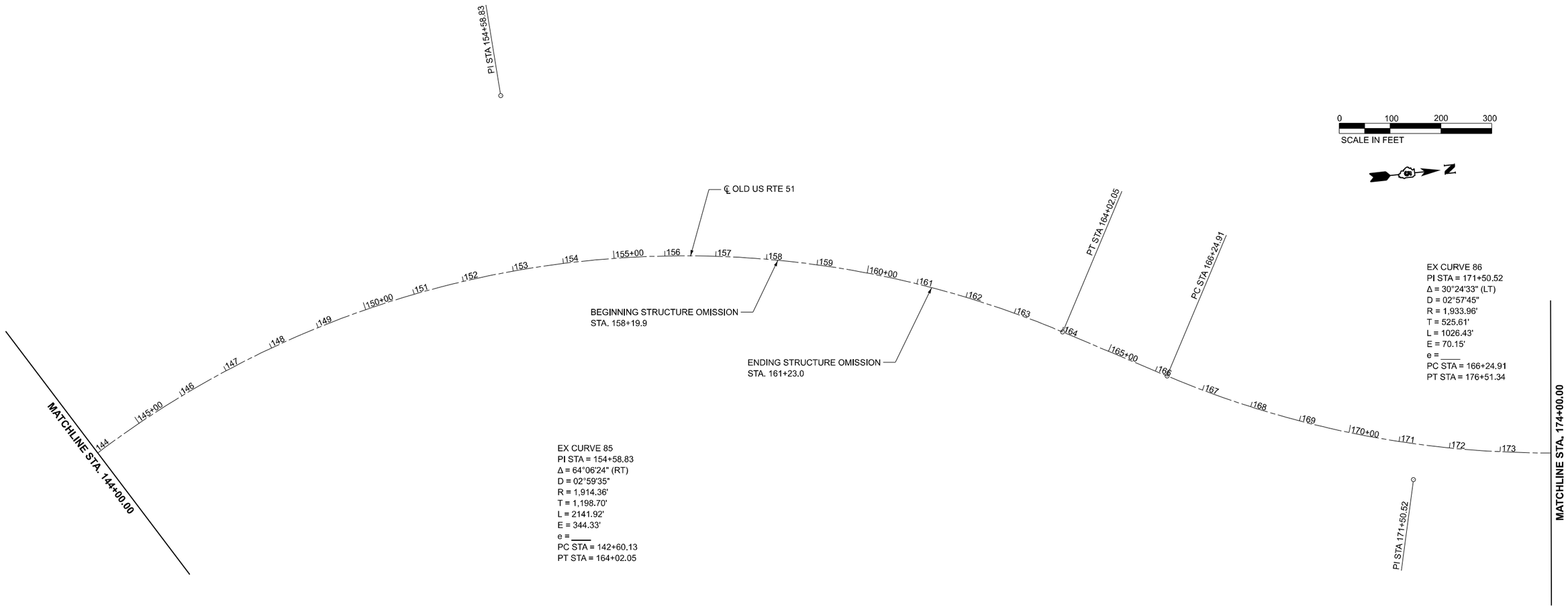

MODEL: Border
FILE NAME: S:\PROJECTS\2023\1371D23_IDOT\DS\WO 1 Contract 70G11\DESIGN_70G11\CAD_Sheets\WHAID570G11_Border.dgn

WILLETT HOFMANN & ASSOCIATES INC
PROFESSIONAL DESIGN FIRM 184.001.001
309 EAST PARK STREET, UNION, IL 61091-0367
T 815 284 3381 DESIGN FIRM: # 184.000918

USER NAME = afull	DESIGNED - AMF	REVISED -	
	DRAWN - AMF	REVISED -	
PLOT SCALE = 0.16666633 ' / in.	CHECKED - GFS	REVISED -	
PLOT DATE = 3/5/2024	DATE -	REVISED -	

STATE OF ILLINOIS
DEPARTMENT OF TRANSPORTATION

FAS 1476 (OLD US RTE 51)
CENTERLINE ALIGNMENT

SCALE: 1"=100' | SHEET 3 OF 9 SHEETS | STA. 144+00.00 TO STA. 174+00.00

F.A. RTE.	SECTION	COUNTY	TOTAL SHEETS	SHEET NO.
*	(55/56)RS-5,57-1(1)RS-1	MCLEAN	85	9
		CONTRACT NO. 70G11		
	ILLINOIS	FED. AID PROJECT		

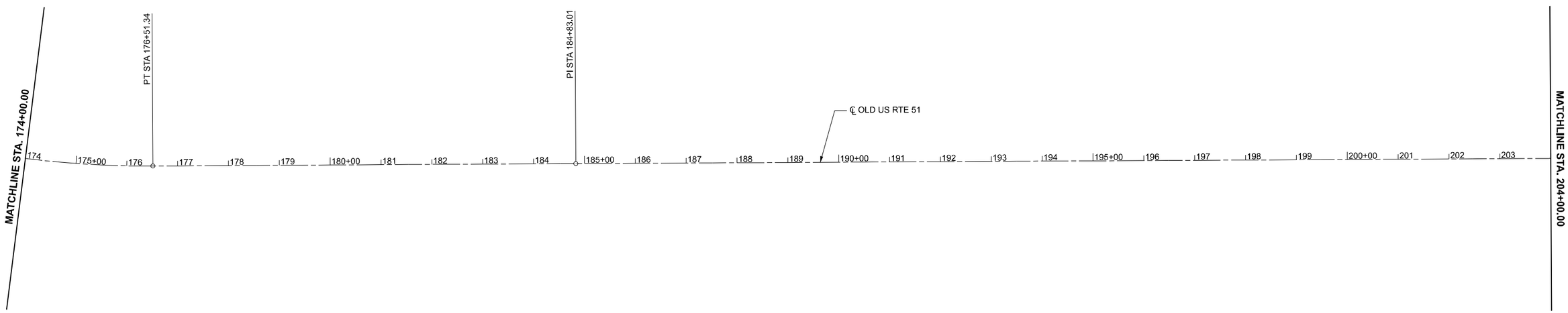

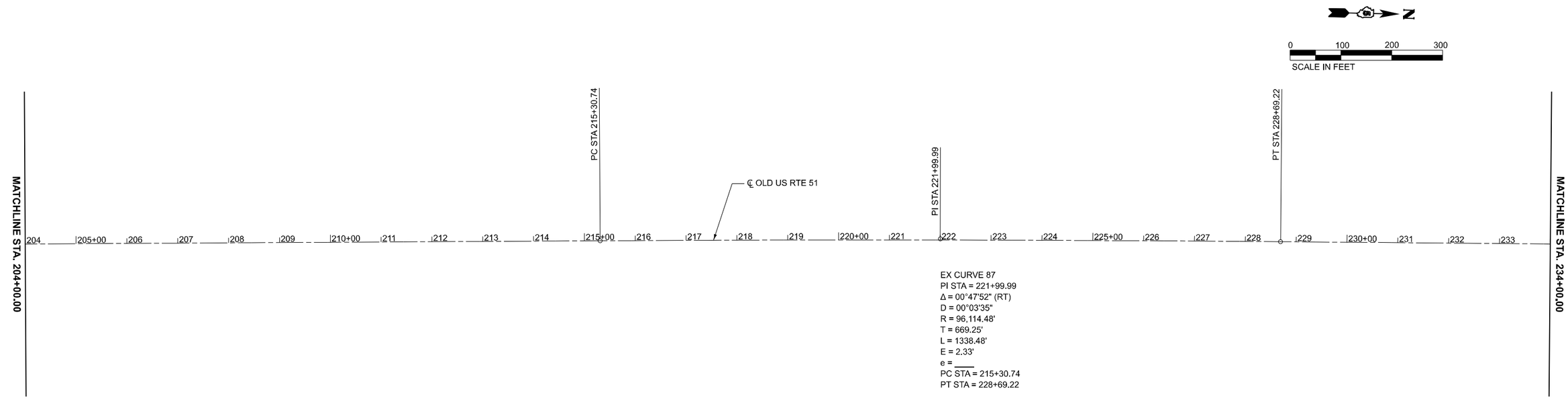

EX CURVE 87
PI STA = 221+99.99
Δ = 00°47'52" (RT)
D = 00°03'35"
R = 96,114.48'
T = 669.25'
L = 1338.48'
E = 2.33'
e = ____
PC STA = 215+30.74
PT STA = 228+69.22

MODEL: Border
FILE NAME: S:\PROJECTS\2023\1371D23_IDOTD5\WO 1 Contract 70G11\DESIGN_70G11\CAD_Sheets\WHAID570G11_Border.dgn

WILLETT HOFMANN & ASSOCIATES INC
ENGINEERING ARCHITECTURE TRANSPORTATION
895 EAST 200 ST SUITE, 2 NOW, IL 61821-6587
T: 815-28-3081 DESIGNFIRM: F-84-900918

USER NAME = afull	DESIGNED - AMF	REVISED -	
	DRAWN - AMF	REVISED -	
PLOT SCALE = 0.16666633 ' / in.	CHECKED - GFS	REVISED -	
PLOT DATE = 3/5/2024	DATE -	REVISED -	

STATE OF ILLINOIS
DEPARTMENT OF TRANSPORTATION

FAS 1476 (OLD US RTE 51)
CENTERLINE ALIGNMENT

SCALE: 1"=100' | SHEET 4 OF 9 SHEETS | STA. 174+00.00 TO STA. 234+00.00

F.A. RTE.	SECTION	COUNTY	TOTAL SHEETS	SHEET NO.
*	(55/56)RS-5,57-1(1)RS-1	MCLEAN	85	10
		CONTRACT NO. 70G11		
	ILLINOIS	FED. AID PROJECT		

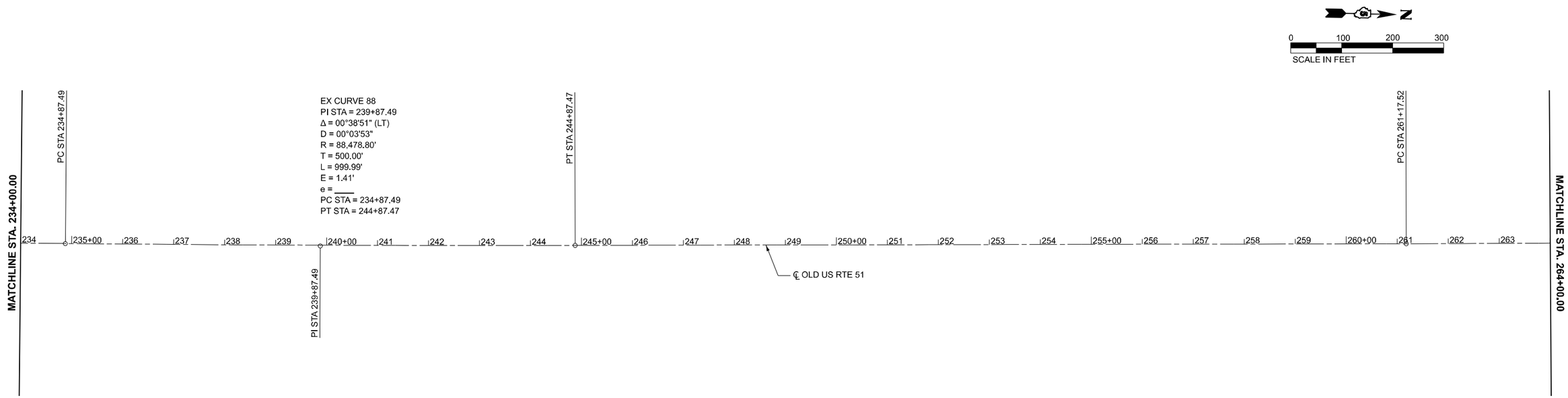

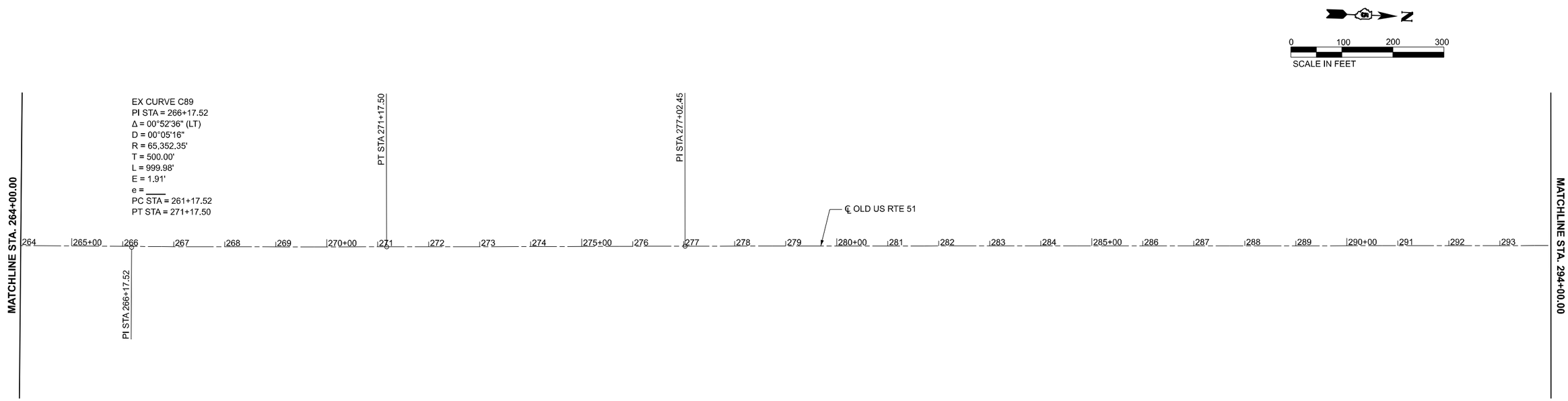

MODEL: Border
FILE NAME: S:\PROJECTS\2023\1371D23_IDOTD5\WO 1 Contract 70G11\DESIGN_70G11\CAD Sheets\WHA\D570G11_Border.dgn

WILLETT HOFMANN & ASSOCIATES INC
ENGINEERING ARCHITECTURE TRANSPORTATION
809 EAST 2ND STREET, DIXON, IL 61021-0367
T: 815 284 3081 DESIGN@WHA-E.COM 84-000918

USER NAME = afull	DESIGNED - AMF	REVISED -	
	DRAWN - AMF	REVISED -	
PLOT SCALE = 0.16666633 ' / in.	CHECKED - GFS	REVISED -	
PLOT DATE = 3/5/2024	DATE -	REVISED -	

STATE OF ILLINOIS
DEPARTMENT OF TRANSPORTATION

FAS 1476 (OLD US RTE 51)
CENTERLINE ALIGNMENT

SCALE: 1"=100' | SHEET 5 OF 9 SHEETS | STA. 234+00.00 TO STA. 294+00.00

F.A. RTE.	SECTION	COUNTY	TOTAL SHEETS	SHEET NO.
*	(55/56)RS-5,57-1(1)RS-1	MCLEAN	85	11
		CONTRACT NO. 70G11		
	ILLINOIS	FED. AID PROJECT		

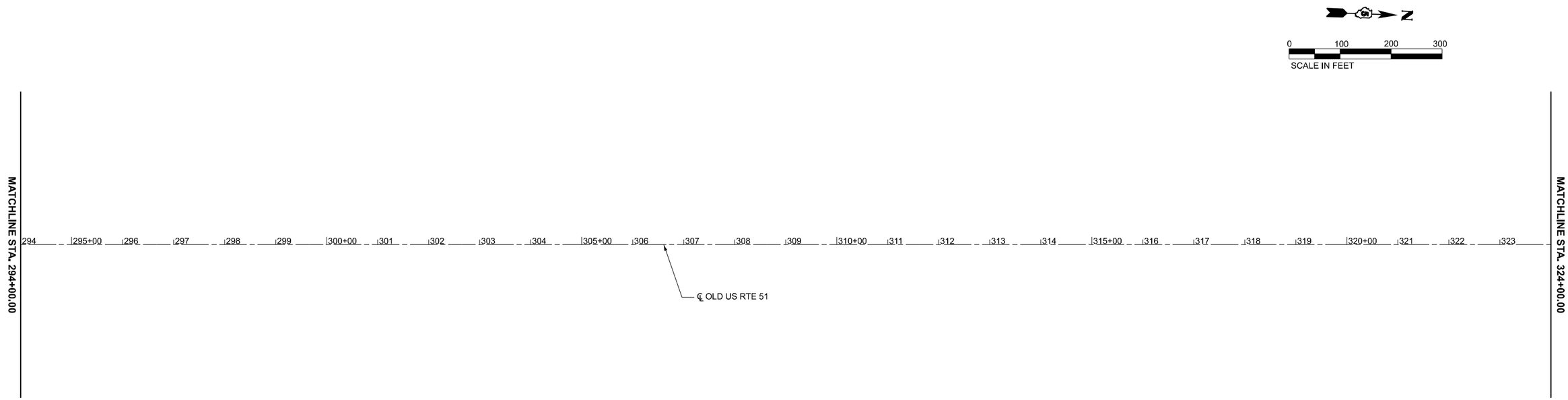

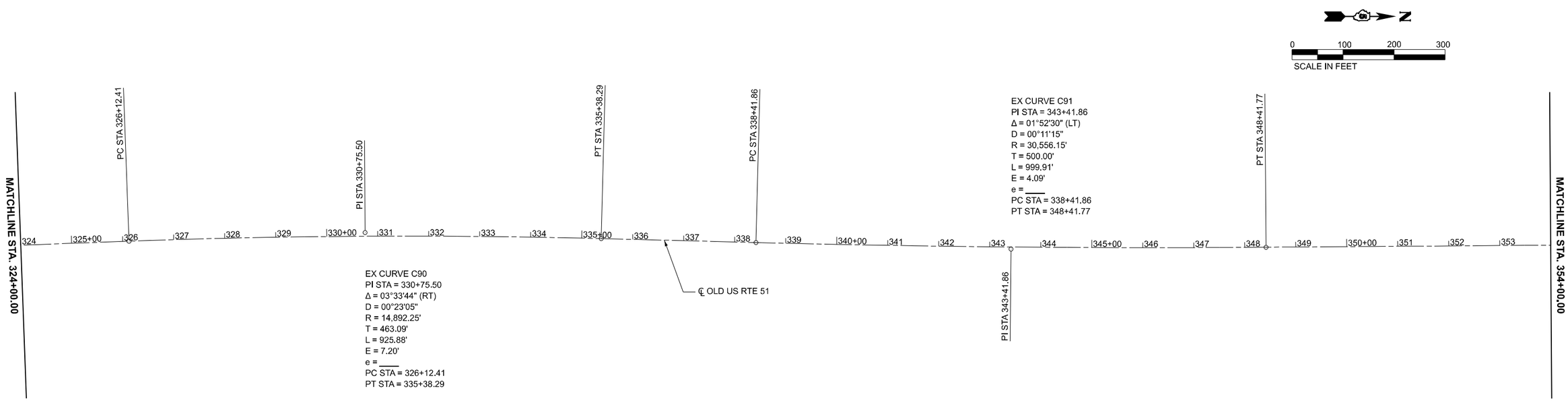

MODEL: Border
FILE NAME: S:\PROJECTS\2023\1371D23_IDOT\DS\WO 1 Contract 70G11\DESIGN_70G11\CAD_Sheets\WHAID570G11_Border.dgn

WILLETT HOFMANN & ASSOCIATES INC
PROFESSIONAL DESIGN FIRM - LICENSE NO. 184-000798
809 EAST 290 STREET, OSWEGO, ILLINOIS 60543
T 815 284 3381 DESIGN FIRM: 184-000798

USER NAME = afull	DESIGNED - AMF	REVISED -	
	DRAWN - AMF	REVISED -	
PLOT SCALE = 0.16666633 ' / in.	CHECKED - GFS	REVISED -	
PLOT DATE = 3/5/2024	DATE -	REVISED -	

STATE OF ILLINOIS
DEPARTMENT OF TRANSPORTATION

FAS 1476 (OLD US RTE 51)
CENTERLINE ALIGNMENT

SCALE: 1"=100' | SHEET 6 OF 9 SHEETS | STA. 294+00.00 TO STA. 354+00.00

F.A. RTE.	SECTION	COUNTY	TOTAL SHEETS	SHEET NO.
*	(55/56)RS-5,57-1(1)RS-1	MCLEAN	85	12

CONTRACT NO. 70G11

ILLINOIS | FED. AID PROJECT

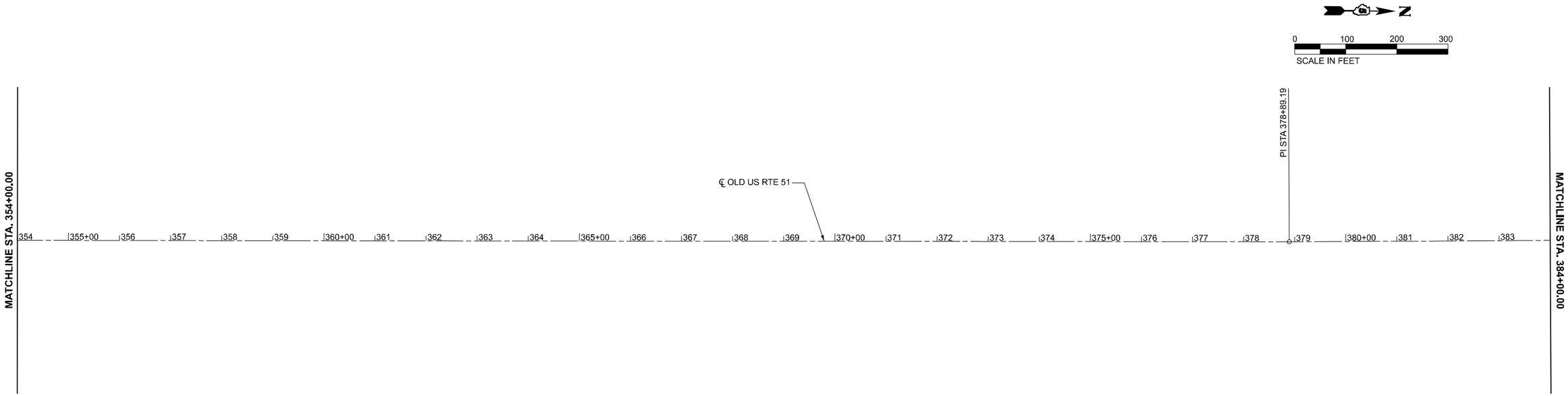

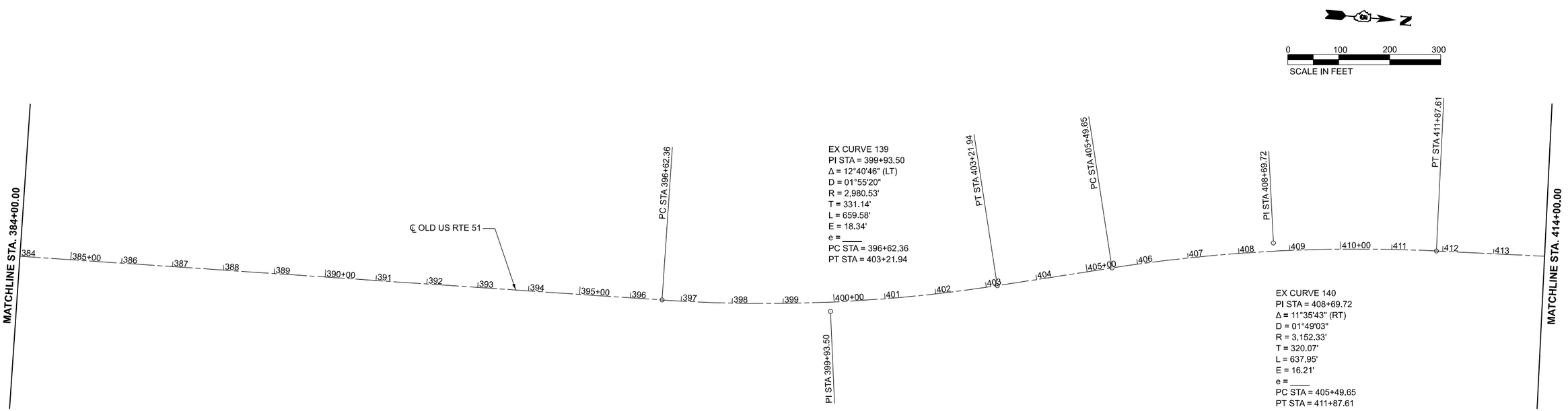

MODEL: Border
FILE NAME: S:\PROJECTS\2023\1371D23_IDOTD5\WO 1 Contract 70G11\DESIGN_70G11\CAD_Sheets\WHA\D570G11_Border.dgn

WILLETT HOFMANN & ASSOCIATES, INC.
PROFESSIONAL ENGINEERS AND LAND SURVEYORS
809 EAST 2ND STREET, DIXON, IL 61021-0367
T: 815-284-3381 DESIGN FIRM: # 184-000918

USER NAME = afull	DESIGNED - AMF	REVISED -	
	DRAWN - AMF	REVISED -	
PLOT SCALE = 0.16666633 ' / in.	CHECKED - GFS	REVISED -	
PLOT DATE = 3/5/2024	DATE -	REVISED -	

STATE OF ILLINOIS
DEPARTMENT OF TRANSPORTATION

FAS 1476 (OLD US RTE 51)
CENTERLINE ALIGNMENT

SCALE: 1"=100' | SHEET 7 OF 9 SHEETS | STA. 354+00.00 TO STA. 414+00.00

F.A. RTE.	SECTION	COUNTY	TOTAL SHEETS	SHEET NO.
*	(55/56)RS-5,57-1(1)RS-1	MCLEAN	85	13
		CONTRACT NO. 70G11		
	ILLINOIS	FED. AID PROJECT		

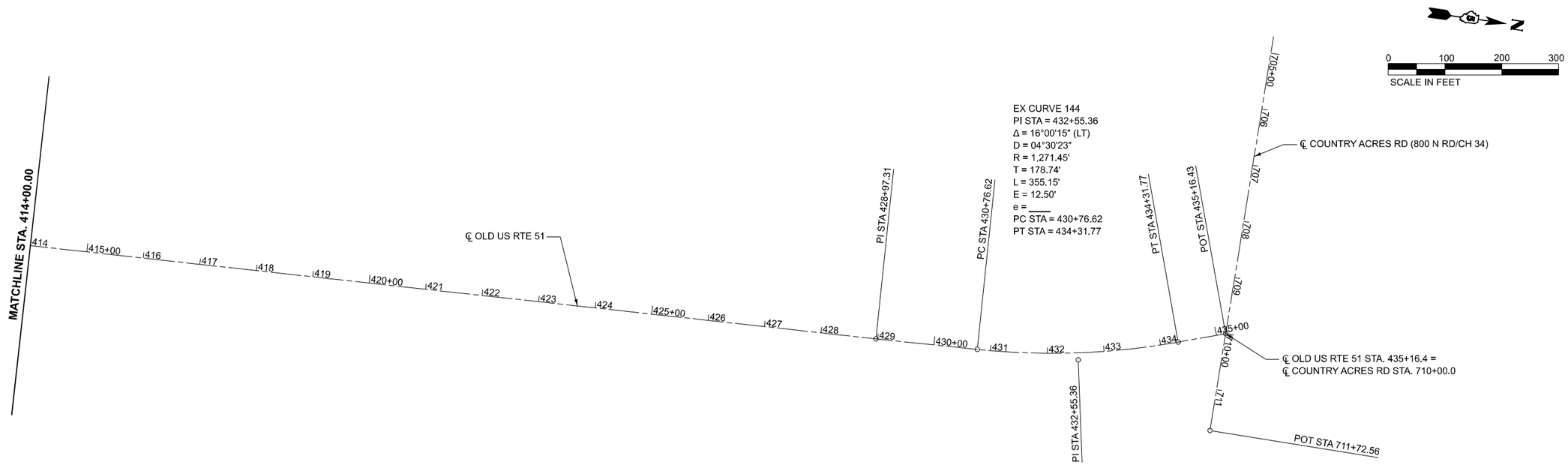

MODEL: Border
FILE NAME: S:\PROJECTS\2023\1371D23_IDOTD5\WO 1 Contract 70G11\DESIGN_70G11\CAD_Sheets\WHAID570G11_Border.dgn

WILLETT HOFMANN & ASSOCIATES, INC.
PROFESSIONAL ENGINEERS AND LAND SURVEYORS
809 EAST 2ND STREET, DIXON, IL 61021-0367
T: 815 284 3381 DESIGN FIRM: # 184-000918

USER NAME = afull	DESIGNED - AMF	REVISED -	
	DRAWN - AMF	REVISED -	
PLOT SCALE = 0.16666633 ' / in.	CHECKED - GFS	REVISED -	
PLOT DATE = 3/5/2024	DATE -	REVISED -	

STATE OF ILLINOIS
DEPARTMENT OF TRANSPORTATION

FAS 1476/FAU 6380 (OLD US RTE 51)
CENTERLINE ALIGNMENT

SCALE: 1"=100' | SHEET 8 OF 9 SHEETS | STA. 414+00.00 TO STA. 435+16.41

F.A. RTE.	SECTION	COUNTY	TOTAL SHEETS	SHEET NO.
*	(55/56)RS-5,57-1(1)RS-1	MCLEAN	85	14
		CONTRACT NO. 70G11		
	ILLINOIS	FED. AID PROJECT		

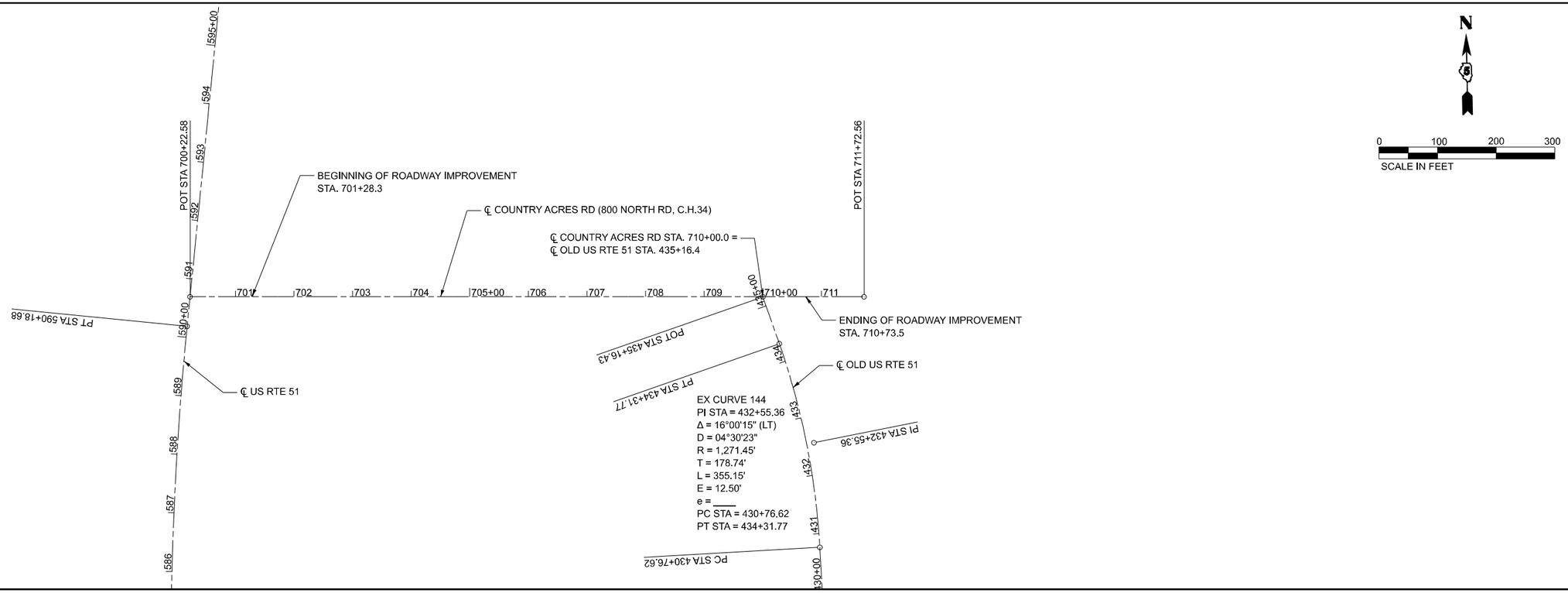

MODEL: Border
FILE NAME: S:\PROJECTS\2023\1371D23_IDOTD5\WO 1 Contract 70G11\DESIGN_70G11\CAD_Sheets\WHAID570G11_Border.dgn

WILLETT HOFMANN & ASSOCIATES, INC.
PROFESSIONAL ENGINEERS AND LAND SURVEYORS
809 EAST 200 STREET, DANVILLE, ILLINOIS 61832-5667
T: 217-446-0500 FAX: 217-446-0506

USER NAME = afull	DESIGNED - AMF	REVISED -	
	DRAWN - AMF	REVISED -	
PLOT SCALE = 0.16666633 ' / in.	CHECKED - GFS	REVISED -	
PLOT DATE = 3/5/2024	DATE -	REVISED -	

STATE OF ILLINOIS
DEPARTMENT OF TRANSPORTATION

FAU 6380 (E 800 NORTH ROAD)
CENTERLINE ALIGNMENT

SCALE: 1"=100' | SHEET 9 OF 9 SHEETS | STA. 701+28.30 TO STA. 710+73.47

F.A. RTE.	SECTION	COUNTY	TOTAL SHEETS	SHEET NO.
*	(55/56)RS-5,57-1(1)RS-1	MCLEAN	85	15
		CONTRACT NO. 70G11		
	ILLINOIS	FED. AID PROJECT		

EXISTING TYPICAL CROSS SECTION

STATION	TO	STATION
54+45.00		90+68.00
125+15.00		134+72.00
178+00.00		435+16.00

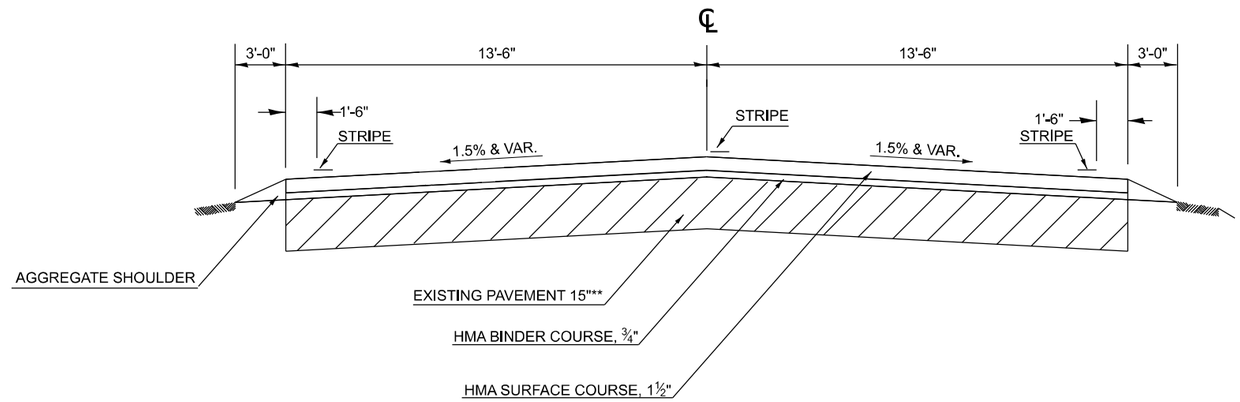

** EXISTING PAVEMENT CONSISTS OF:
9" NON-REINFORCED PCC BASE COURSE
6" & VARIABLE ASPHALT PAVEMENT

PROPOSED TYPICAL CROSS SECTION

STATION	TO	STATION
54+45.00		90+68.00
125+15.00		133+24.20*
134+14.90*		134+72.00
178+00.00		435+16.00

* OMISSION FOR STRUCTURE NO. 057-0225
STA. 133+24.2 TO STA. 134+14.9

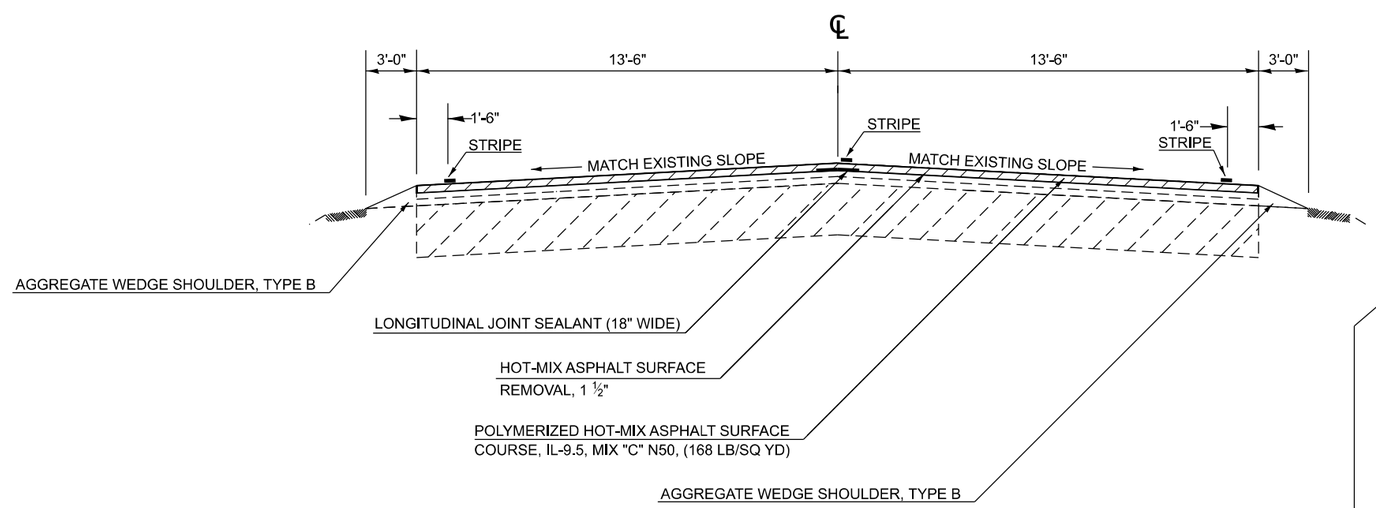

STEEL PLATE BEAM GUARDRAIL DETAIL

STA. 241+19 - 243+86 RT
STA. 241+19 - 243+86 LT
STA. 255+82 - 257+99 RT
STA. 261+15 - 263+33 RT
STA. 261+22 - 263+39 LT
STA. 298+76 - 300+93 RT

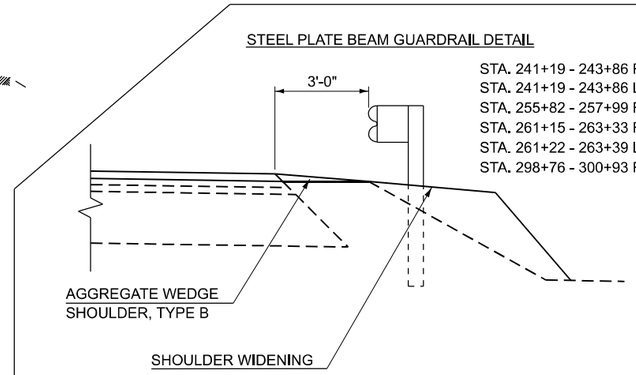

MODEL: Border
FILE NAME: S:\PROJECTS\2023\1371D23_IDOTD5\WO 1 Contract 70G11\DESIGN_70G11\CAD_Sheets\WHAD570G11_Border.dgn

WILLETT HOFMANN & ASSOCIATES INC
PROFESSIONAL ENGINEERS LAND SURVEYORS
801 EAST DIVISION STREET, DIXON, IL (815) 284-3387
T: 815 284 3381 DESIGN FIRM: # 184-000918

USER NAME = afull	DESIGNED - AMF	REVISED -	
	DRAWN - TJA	REVISED -	
PLOT SCALE = 0.16666633 ' / in.	CHECKED - GFS	REVISED -	
PLOT DATE = 3/5/2024	DATE -	REVISED -	

STATE OF ILLINOIS
DEPARTMENT OF TRANSPORTATION

OR 2/FAS 1476/FAU 6380 (OLD US 51)
TYPICAL SECTIONS

SCALE: N.T.S. | SHEET 1 OF 5 SHEETS | STA. | TO STA.

F.A. RTE.	SECTION	COUNTY	TOTAL SHEETS	SHEET NO.
*	(55/56)RS-5,57-1(1)RS-1	MCLEAN	85	16
		CONTRACT NO. 70G11		
	ILLINOIS	FED. AID PROJECT		

EXISTING TYPICAL CROSS SECTION

STATION	TO	STATION
90+68.00		106+45.00
107+45.00		110+30.00

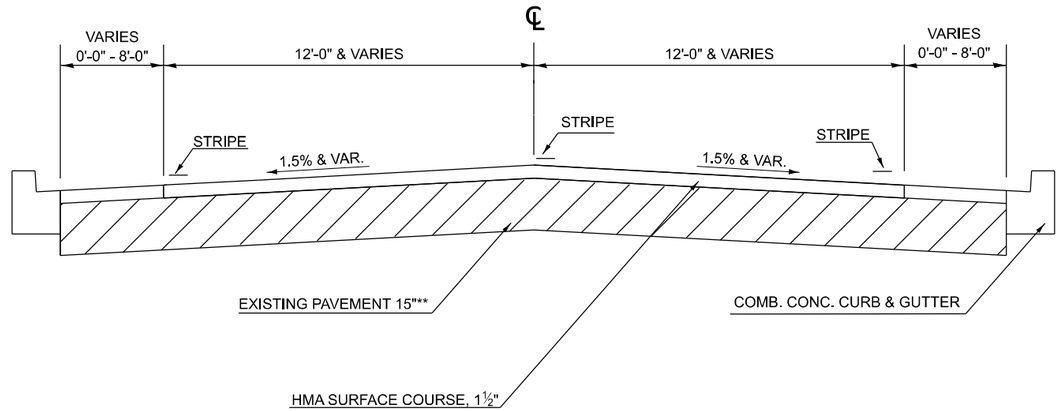

** EXISTING PAVEMENT CONSISTS OF:
9" NON-REINFORCED PCC BASE COURSE
6" & VARIABLE ASPHALT PAVEMENT

PROPOSED TYPICAL CROSS SECTION

STATION	TO	STATION
90+68.00		106+44.50*
107+45.20*		110+30.00

* OMISSION FOR US ROUTE 136
STA. 106+44.5 TO STA. 107+45.2

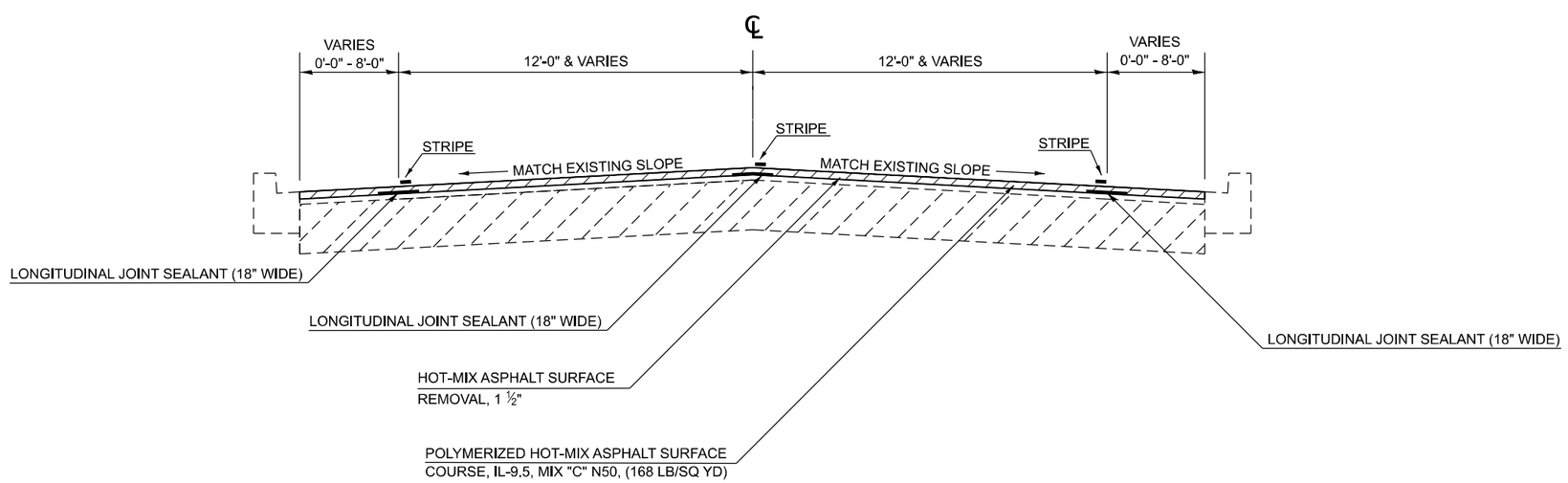

MODEL: Border
FILE NAME: S:\PROJECTS\2023\1371D23_IDOTD5\WO 1 Contract 70G11\DESIGN_70G11\CAD_Sheets\WHA\D570G11_Border.dgn

WILLETT HOFMANN & ASSOCIATES, INC.
PROFESSIONAL ENGINEERS, LAND SURVEYORS
809 EAST 2ND STREET, DIXON, IL 61021-0367
T: 815 284 3381 DESIGN@WHA-E.COM

USER NAME = afull	DESIGNED - AMF	REVISED -	
	DRAWN - TJA	REVISED -	
PLOT SCALE = 0.16666633 ' / in.	CHECKED - GFS	REVISED -	
PLOT DATE = 3/5/2024	DATE -	REVISED -	

STATE OF ILLINOIS
DEPARTMENT OF TRANSPORTATION

FAS 1476 (OLD US 51)
TYPICAL SECTIONS

SCALE: N.T.S. | SHEET 2 OF 5 SHEETS | STA. | TO STA.

F.A. RTE.	SECTION	COUNTY	TOTAL SHEETS	SHEET NO.
*	(55/56)RS-5,57-1(1)RS-1	MCLEAN	85	17
		CONTRACT NO. 70G11		
	ILLINOIS	FED. AID PROJECT		

EXISTING TYPICAL CROSS SECTION

STATION	TO	STATION
110+30.00		125+15.00

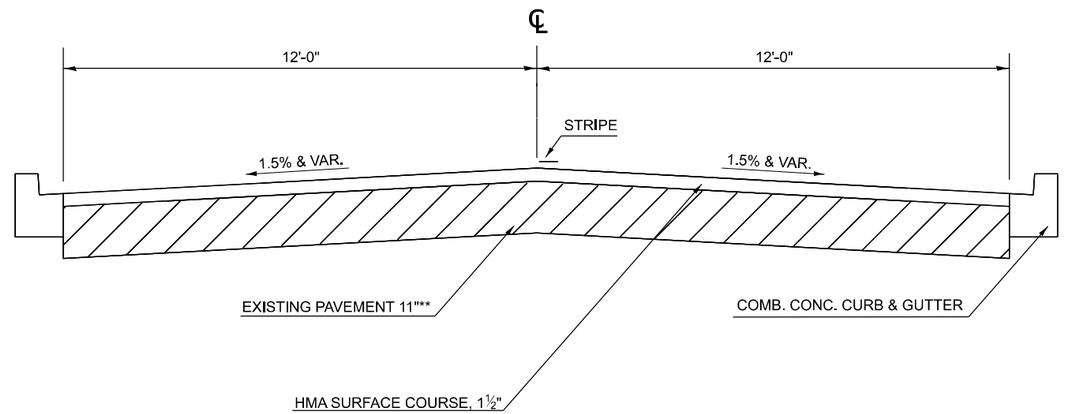

** EXISTING PAVEMENT CONSISTS OF:
9" NON-REINFORCED PCC BASE COURSE
6" & VARIABLE ASPHALT PAVEMENT

PROPOSED TYPICAL CROSS SECTION

STATION	TO	STATION
110+30.00		125+15.00

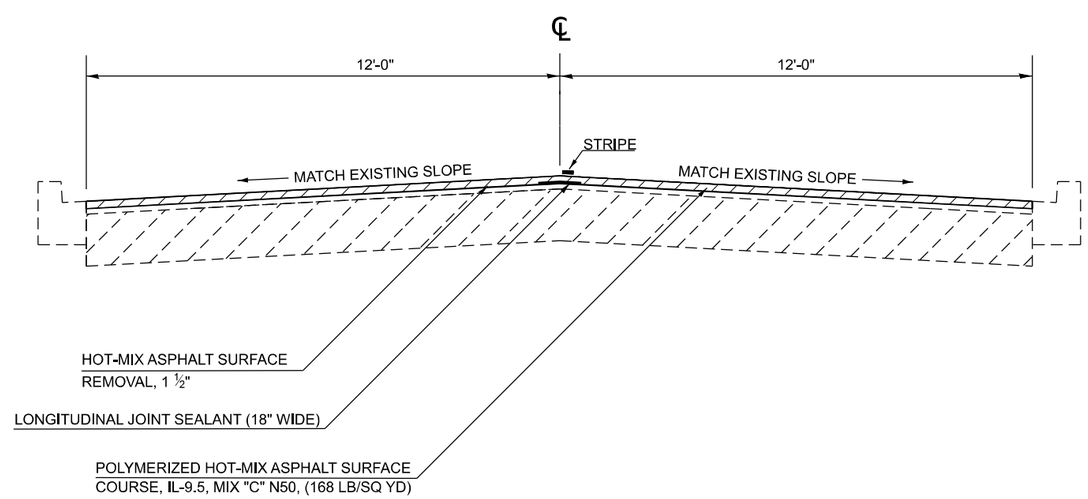

MODEL: Border
FILE NAME: S:\PROJECTS\2023\1371D23_IDOTD5\WO 1 Contract 70G11\DESIGN_70G11\CAD_Sheets\WHAID570G11_Border.dgn

WILLETT HOFMANN & ASSOCIATES, INC.
PROFESSIONAL ENGINEERS AND LAND SURVEYORS
809 EAST PAINT STREET, PAXTON, IL 60957-0367
T: 815-284-3381 DESIGN FIRM: 184-000918

USER NAME = afull	DESIGNED - AMF	REVISED -	
	DRAWN - TJA	REVISED -	
PLOT SCALE = 0.16666633 ' / in.	CHECKED - GFS	REVISED -	
PLOT DATE = 3/5/2024	DATE -	REVISED -	

STATE OF ILLINOIS
DEPARTMENT OF TRANSPORTATION

FAS 1476 (OLD US 51)
TYPICAL SECTIONS

SCALE: N.T.S. | SHEET 3 OF 5 SHEETS | STA. | TO STA.

F.A. RTE.	SECTION	COUNTY	TOTAL SHEETS	SHEET NO.
*	(55/56)RS-5,57-1(1)RS-1	MCLEAN	85	18
		CONTRACT NO. 70G11		
	ILLINOIS	FED. AID PROJECT		

EXISTING TYPICAL CROSS SECTION

STATION	TO	STATION
134+72.00		178+00.00

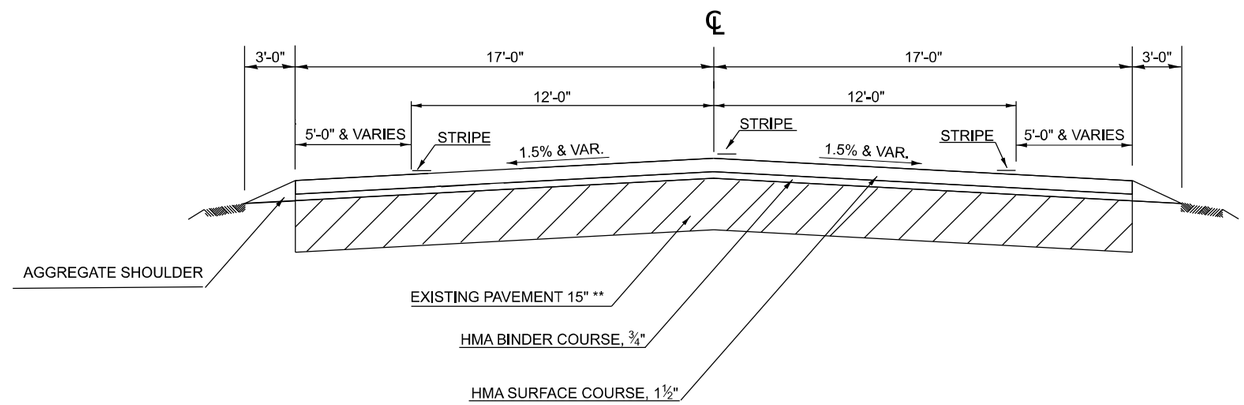

** EXISTING PAVEMENT CONSISTS OF:
9" STABILIZED BASE COURSE
6" & VARIABLE ASPHALT PAVEMENT

PROPOSED TYPICAL CROSS SECTION

STATION	TO	STATION
134+72.00		158+19.90*
161+23.00*		178+00.00

* OMISSION FOR STRUCTURE NO. 057-0056
STA. 158+19.9 TO STA. 161+23.0

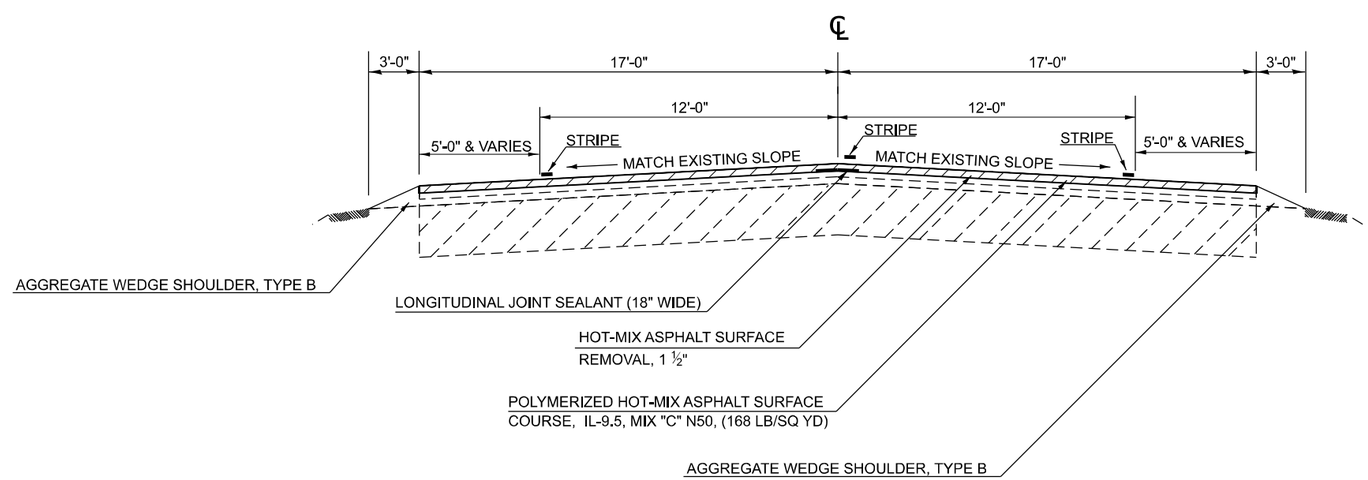

MODEL: Border
FILE NAME: S:\PROJECTS\2023\1371D23_IDOTD5\WO 1 Contract 70G11\DESIGN_70G11\CAD_Sheets\WHA\D570G11_Border.dgn

WILLETT HOFMANN & ASSOCIATES, INC.
PROFESSIONAL ENGINEERS AND LAND SURVEYORS
809 EAST 2ND STREET, DIXON, IL 61021-0367
T: 815-284-3081 DESIGN@WHA-E.COM 815-284-3033

USER NAME = afull	DESIGNED - AMF	REVISED -	
	DRAWN - TJA	REVISED -	
PLOT SCALE = 0.16666633 ' / in.	CHECKED - GFS	REVISED -	
PLOT DATE = 3/5/2024	DATE -	REVISED -	

STATE OF ILLINOIS
DEPARTMENT OF TRANSPORTATION

FAS 1476 (OLD US 51)
TYPICAL SECTIONS

SCALE: N.T.S. | SHEET 4 OF 5 SHEETS | STA. | TO STA.

F.A. RTE.	SECTION	COUNTY	TOTAL SHEETS	SHEET NO.
*	(55/56)RS-5,57-1(1)RS-1	MCLEAN	85	19
		CONTRACT NO. 70G11		
	ILLINOIS	FED. AID PROJECT		

EXISTING TYPICAL CROSS SECTION

STATION 701+28.3 TO STATION 710+73.5

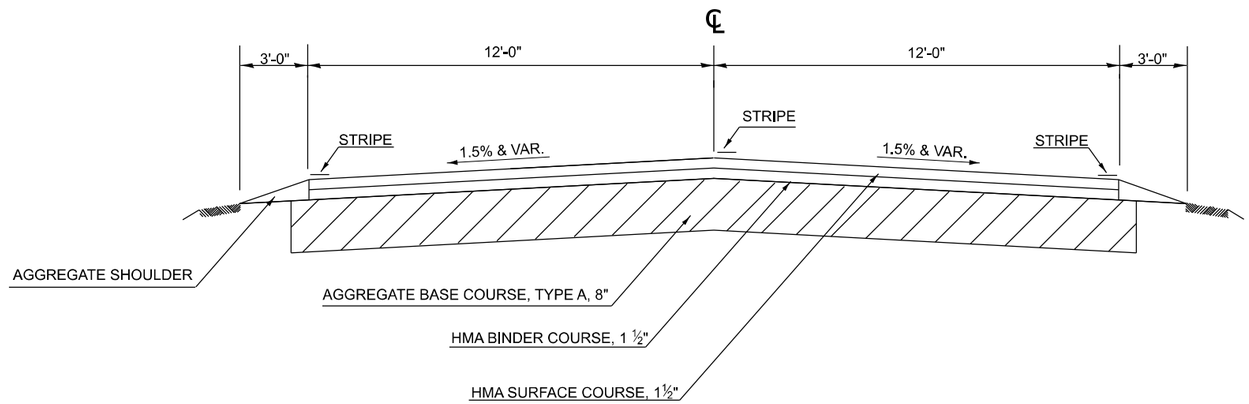

PROPOSED TYPICAL CROSS SECTION

STATION 701+28.3 TO STATION 710+73.5

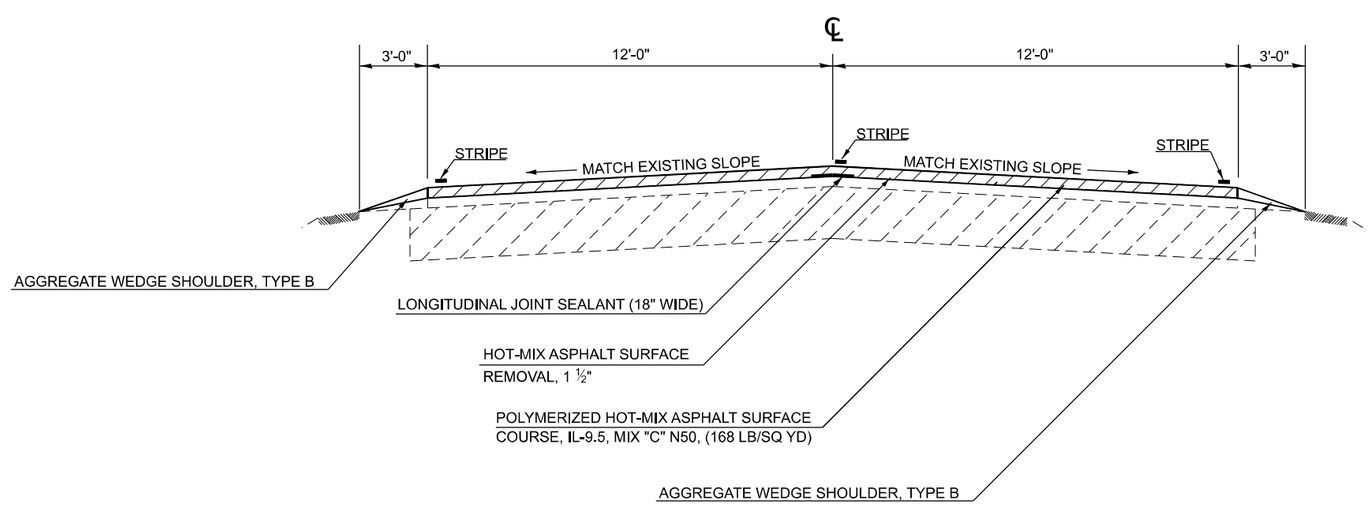

MODEL: Border
FILE NAME: S:\PROJECTS\2023\1371D23_IDOTD5\WO 1 Contract 70G11\DESIGN_70G11\CAD_Sheets\WHAID570G11_Border.dgn

WILLETT HOFMANN & ASSOCIATES, INC.
PROFESSIONAL ENGINEERS AND LAND SURVEYORS
809 EAST 2ND STREET, DIXON, IL 61021-0367
T: 815 284 3381 DESIGN@WHA-E.COM 815 284 3383

USER NAME = afull	DESIGNED - AMF	REVISED -	
	DRAWN - TJA	REVISED -	
PLOT SCALE = 0.16666633 ' / in.	CHECKED - GFS	REVISED -	
PLOT DATE = 3/5/2024	DATE -	REVISED -	

STATE OF ILLINOIS
DEPARTMENT OF TRANSPORTATION

FAU 6380 (OLD US 51)
TYPICAL SECTIONS

SCALE: N.T.S. | SHEET 5 OF 5 SHEETS | STA. | TO STA.

F.A. RTE.	SECTION	COUNTY	TOTAL SHEETS	SHEET NO.
*	(55/56)RS-5,57-1(1)RS-1	MCLEAN	85	20
		CONTRACT NO. 70G11		
	ILLINOIS	FED. AID PROJECT		

SCHEDULE OF QUANTITIES

PATCHING SCHEDULE									
LOCATION							44201803	44201823	44201827
							CLASS D PATCHES, TYPE II, 13 INCH	CLASS D PATCHES, TYPE I, 15 INCH	CLASS D PATCHES, TYPE II, 15 INCH
STATION	TO	STATION	LT/RT	NUMBER	WIDTH	LENGTH	SQ YD	SQ YD	SQ YD
				EACH	FT	FT			
OR 2 (OLD US 51) (RURAL)									
54+57	TO	106+54	LT/RT	1	13.5	4.5	6.8		
54+57	TO	106+54	LT/RT	2	13.5	6	18.0		
54+57	TO	106+54	LT/RT	1	12	4.5	6.0		
54+57	TO	106+54	LT/RT	2	12	6	16.0		
SUBTOTAL							46.8		
USE							47		
FAS 1476 (OLD US 51) (URBAN)									
107+45	TO	147+59	LT/RT	1	13.5	4.5	6.8		
107+45	TO	147+59	LT/RT	1	13.5	6	9.0		
107+45	TO	147+59	LT/RT	1	12	4.5			6.0
107+45	TO	147+59	LT/RT	1	12	6			8.0
110+59	TO	110+67	RT	1					8.8
118+61	TO	118+77	LT	1					13.0
118+95	TO	119+04	RT	1				2.2	
SUBTOTAL							15.8	2.2	35.8
USE							16	3	36
FAS 1476 (OLD US 51) (RURAL)									
147+58	TO	420+58	LT/RT	14	13.5	4.5	94.5		
147+58	TO	420+58	LT/RT	22	13.5	6	198.0		
147+58	TO	420+58	LT/RT	2	12	4.5	12.0		
147+58	TO	420+58	LT/RT	2	12	6	16.0		
SUBTOTAL							304.5		
USE							305		
FAU 6380 (OLD US 51) (URBAN)									
420+58	TO	435+16	LT/RT	1	13.5	4.5			6.8
420+58	TO	435+16	LT/RT	1	13.5	6			9.0
701+28	TO	710+73	LT/RT	1	12	4.5			6.0
701+28	TO	710+73	LT/RT	1	12	6			8.0
SUBTOTAL									29.8
USE									30
TOTAL							368	3	66

NOTE: SCHEDULE PROVIDED INCLUDES ALLOWANCES BASED ON FIELD ESTIMATES AND ADDITIONAL PATCHING REQUIRED AT DESIGNATED LOCATIONS TO ACCOMMODATE THE ADA RAMP INSTALLATION SHOWN. PATCH LOCATIONS WILL BE LOCATED BY THE ENGINEER IN THE FIELD. FINAL PAYMENT WILL BE BASED ON MEASURED WORK INSTALLED.

AGGEGATE SHOULDER SCHEDULE							
LOCATION							48102100
STATION	TO	STATION	LT/RT	SHOULDER LENGTH	SHOULDER WIDTH	AVERAGE SHOULDER THICKNESS	AGGREGATE WEDGE SHOULDER, TYPE B
				FT	FT	INCHES	TON
OR 2 (OLD US 51) (RURAL)							
54+57	TO	69+00	LT	1460	3	1 1/2	42
54+57	TO	69+00	RT	1455	3	1 1/2	41
69+00	TO	84+00	LT	1500	3	1 1/2	43
69+00	TO	84+00	RT	1500	3	1 1/2	43
84+00	TO	93+28	LT	928	3	1 1/2	26
84+00	TO	92+99	RT	899	3	1 1/2	26
SUBTOTAL							221
FAS 1476 (OLD US 51) (URBAN)							
125+15	TO	129+00	RT	385	3	1 1/2	11
127+02	TO	129+00	LT	198	3	1 1/2	6
129+00	TO	133+24	LT	424	3	1 1/2	12
129+00	TO	133+24	RT	424	3	1 1/2	12
134+15	TO	144+00	LT	985	3	1 1/2	28
134+15	TO	144+00	RT	985	3	1 1/2	28
144+00	TO	147+58	LT	358	3	1 1/2	10
144+00	TO	147+58	RT	358	3	1 1/2	10
SUBTOTAL							117
FAS 1476 (OLD US 51) (RURAL)							
147+58	TO	158+20	LT	1062	3	1 1/2	30
147+58	TO	158+20	RT	1062	3	1 1/2	30
161+23	TO	174+00	LT	1277	3	1 1/2	36
161+23	TO	174+00	RT	1277	3	1 1/2	36

AGGEGATE SHOULDER SCHEDULE - CONTINUED							
LOCATION							48102100
STATION	TO	STATION	LT/RT	SHOULDER LENGTH	SHOULDER WIDTH	AVERAGE SHOULDER THICKNESS	AGGREGATE WEDGE SHOULDER, TYPE B
				FT	FT	INCHES	TON
FAS 1476 (OLD US 51) (RURAL) - CONTINUED							
174+00	TO	189+00	LT	1500	3	1 1/2	43
174+00	TO	189+00	RT	1500	3	1 1/2	43
189+00	TO	204+00	LT	1500	3	1 1/2	43
189+00	TO	204+00	RT	1500	3	1 1/2	43
204+00	TO	219+00	LT	1500	3	1 1/2	43
204+00	TO	219+00	RT	1500	3	1 1/2	43
219+00	TO	234+00	LT	1500	3	1 1/2	43
219+00	TO	234+00	RT	1500	3	1 1/2	43
234+00	TO	241+61	LT	761	3	1 1/2	22
234+00	TO	241+62	RT	762	3	1 1/2	22
243+88	TO	249+00	RT	512	3	1 1/2	15
243+90	TO	249+00	LT	510	3	1 1/2	15
249+00	TO	255+83	LT	683	3	1 1/2	19
249+00	TO	255+82	RT	682	3	1 1/2	19
257+93	TO	261+23	RT	330	3	1 1/2	9
257+98	TO	261+22	LT	324	3	1 1/2	9
263+29	TO	264+00	RT	71	3	1 1/2	2
263+33	TO	264+00	LT	67	3	1 1/2	2
264+00	TO	268+79	LT	479	3	1 1/2	14
264+00	TO	268+75	RT	475	3	1 1/2	14
270+80	TO	279+00	RT	820	3	1 1/2	23
271+10	TO	279+00	LT	790	3	1 1/2	22
279+00	TO	286+84	RT	784	3	1 1/2	22
279+00	TO	286+90	LT	790	3	1 1/2	22
289+07	TO	294+00	RT	493	3	1 1/2	14
289+15	TO	294+00	LT	485	3	1 1/2	14
294+00	TO	298+75	RT	475	3	1 1/2	14
294+00	TO	307+71	LT	1371	3	1 1/2	39
300+98	TO	307+37	RT	639	3	1 1/2	18
309+43	TO	324+00	RT	1457	3	1 1/2	41
309+52	TO	324+00	LT	1448	3	1 1/2	41
324+00	TO	339+00	LT	1500	3	1 1/2	43
324+00	TO	339+00	RT	1500	3	1 1/2	43
339+00	TO	354+00	LT	1500	3	1 1/2	43
339+00	TO	354+00	RT	1500	3	1 1/2	43
354+00	TO	369+00	LT	1500	3	1 1/2	43
354+00	TO	369+00	RT	1500	3	1 1/2	43
369+00	TO	384+00	LT	1500	3	1 1/2	43
369+00	TO	384+00	RT	1500	3	1 1/2	43
384+00	TO	399+00	LT	1500	3	1 1/2	43
384+00	TO	399+00	RT	1500	3	1 1/2	43
399+00	TO	414+00	LT	1500	3	1 1/2	43
399+00	TO	414+00	RT	1500	3	1 1/2	43
414+00	TO	420+58	LT	658	3	1 1/2	19
414+00	TO	420+58	RT	658	3	1 1/2	19
SUBTOTAL							1462
FAU 6380 (OLD US 51) (URBAN)							
420+58	TO	429+00	LT	842	3	1 1/2	24
420+58	TO	429+00	RT	842	3	1 1/2	24
429+00	TO	434+75	LT	575	3	1 1/2	16
429+00	TO	434+55	RT	555	3	1 1/2	16
701+28	TO	710+73	LT	945	3	1 1/2	27
701+28	TO	709+63	RT	835	3	1 1/2	24
710+50	TO	710+73	RT	23	3	1 1/2	1
SUBTOTAL							132
TOTAL							1932

NOTE: MEASUREMENTS SHOWN WERE OBTAINED USING CADD SOFTWARE. MEASUREMENTS TO BE VERIFIED IN THE FIELD.

MAINLINE HMA PAVING SCHEDULE								
LOCATION				40600290	40600370	40604150	44000155	48203100
				BITUMINOUS MATERIALS (TACK COAT)	LONGITUDINAL JOINT SEALANT	POLYMERIZED HOT-MIX ASPHALT SURFACE COURSE, IL-9.5 MIX "C", N50	HOT-MIX ASPHALT SURFACE REMOVAL, 1 1/2"	HOT-MIX ASPHALT SHOULDERS
STATION	TO	STATION	LT/RT	POUND	FOOT	TON	SQ YD	TON
OR 2 (OLD US 51) (RURAL)								
54+57	TO	69+00	LT/RT	1982	1443	370	4405	
69+00	TO	84+00	LT/RT	2025	1500	378	4500	
84+00	TO	99+00	LT/RT	2559	3101	478	5686	
99+00	TO	106+45	LT/RT	1601	2235	299	3557	
SUBTOTAL				8167	8279	1525	18148	
FAS 1476 (OLD US 51) (URBAN)								
107+45	TO	114+00	LT/RT	1003	1227	187	2228	
114+00	TO	129+00	LT/RT	1844	1500	344	4097	
129+00	TO	133+24	LT/RT	573	424	107	1272	
134+15	TO	144+00	LT/RT	1615	985	301	3588	
144+00	TO	147+58	LT/RT	609	358	114	1352	
SUBTOTAL				5644	4494	1053	12537	
FAS 1476 (OLD US 51) (RURAL)								
147+58	TO	158+20	LT/RT	1805	1062	337	4012	
161+23	TO	174+00	LT/RT	2171	1277	405	4824	
174+00	TO	189+00	LT/RT	2147	1500	401	4772	
189+00	TO	204+00	LT/RT	2025	1500	378	4500	
204+00	TO	219+00	LT/RT	2025	1500	378	4500	
219+00	TO	234+00	LT/RT	2025	1500	378	4500	
234+00	TO	249+00	LT/RT	2025	1500	378	4500	
241+56	TO	243+93	LT	33			73	6
241+58	TO	243+92	RT	24			53	4
249+00	TO	264+00	LT/RT	2025	1500	378	4500	
255+80	TO	258+10	LT	29			64	5
255+82	TO	258+07	RT	28			63	5
261+13	TO	263+44	LT	35			78	7
261+13	TO	263+40	RT	28			62	5
264+00	TO	279+00	LT/RT	2025	1500	378	4500	
268+72	TO	271+11	RT	25			55	5
268+76	TO	271+14	LT	37			82	7
279+00	TO	294+00	LT/RT	2025	1500	378	4500	
286+83	TO	289+09	RT	39			86	7
286+85	TO	289+16	LT	20			44	4
294+00	TO	309+00	LT/RT	2025	1500	378	4500	
298+71	TO	301+02	RT	33			73	6
307+25	TO	309+56	RT	29			65	5
307+70	TO	309+57	LT	20			45	4
309+00	TO	324+00	LT/RT	2025	1500	378	4500	
324+00	TO	339+00	LT/RT	2025	1500	378	4500	
339+00	TO	354+00	LT/RT	2025	1500	378	4500	
354+00	TO	369+00	LT/RT	2025	1500	378	4500	
369+00	TO	384+00	LT/RT	2025	1500	378	4500	
384+00	TO	399+00	LT/RT	2025	1500	378	4500	
399+00	TO	414+00	LT/RT	2025	1500	378	4500	
414+00	TO	420+58	LT/RT	888	658	166	1974	
SUBTOTAL				37766	26997	6979	83925	70
FAU 6380 (OLD US 51) (URBAN)								
420+58	TO	429+00	LT/RT	1137	842	212	2526	
429+00	TO	435+05	LT/RT	864	605	161	1921	
701+28	TO	710+74	LT/RT	1038	946	194	2307	
SUBTOTAL				3039	2393	567	6754	
TOTAL				54616	42163	10124	121364	70

MILLED SURFACE TACK COAT APLICATION RATE: 0.05 LB/SQ FT
POLYMERIZED HOT-MIX ASPHALT SURFACE COURSE, IL-9.5, MIX "C", N70
& HOT-MIX ASPHALT SHOULDERS APPLICATION RATE: 112 LBS/SQ. YD./INCH

SCHEDULE OF QUANTITIES

GUARDRAIL SCHEDULE

LOCATION				63000003 STEEL PLATE BEAM GUARDRAIL, TYPE A, 9 FOOT POSTS	63100167 TRAFFIC BARRIER TERMINAL, TYPE 1 (SPECIAL) TANGENT	63200310 GUARDRAIL REMOVAL	72501000 TERMINAL MARKER-DIRECT APPLIED	78200005 GUARDRAIL REFLECTORS, TYPE A	20400800 FURNISHED EXCAVATION
STATION	TO	STATION	LT/RT	FOOT	EACH	FOOT	EACH	EACH	CU. YD.
FAS 1476 (OLD US RTE 51) (RURAL)									
240+40	TO	243+86	RT	246	2	218	2	6	20
241+00	TO	244+13	LT	213	2	217	2	5	16
255+80	TO	258+05	RT	125	2	217	2	4	3
260+99	TO	263+49	RT	150	2	217	2	5	26
261+06	TO	263+51	LT	145	2	217	2	5	14
298+47	TO	301+22	RT	175	2	217	2	5	61
SUBTOTAL				1054	12	1303	12	30	140
TOTAL				1054	12	1303	12	30	140

UTILITY CASTING ADJUSTMENT SCHEDULE

LOCATION			561019210 WATER VALVES TO BE ADJUSTED	60255500 MANHOLES TO BE ADJUSTED	60260100 INLETS TO BE ADJUSTED	X0323455 ADJUST MONITORING WELL	X8140115 HANDHOLE TO BE ADJUSTED
STATION	OFFSET	LT/RT	EACH	EACH	EACH	EACH	EACH
OR 2 (OLD US 51) (RURAL)							
98+64	24'	LT	1				
103+10	13'	RT	1				
103+39	30'	RT	1				
SUBTOTAL			3				
FAS 1476 (OLD US 51) (URBAN)							
109+08	15'	LT		1			
110+41	18'	RT					1
110+52	20'	RT			1		
110+53	20'	LT			1		
110+64	28'	RT		1			
110+66	20'	LT		1			
111+04	15'	LT		1			
114+32	23'	RT				1	
114+38	22'	RT			1		
114+52	42'	LT			1		
114+61	22'	LT		1			
114+67	26'	LT		1			
114+82	42'	LT			1		
114+86	23'	RT	1				
114+95	21'	RT	1				
114+98	22'	RT	1				
118+25	12'	RT	1				
118+36	30'	RT					1
118+61	20'	LT		1			
118+74	26'	LT	1				
118+78	21'	LT		1			
118+79	19'	RT	1				
118+80	33'	LT			1		
118+83	21'	RT	1				
118+90	27'	RT	1				
118+91	22'	RT	1				
118+94	12'	RT	1				
120+03	22'	LT			1		
SUBTOTAL			10	8	7	1	2
TOTAL			13	8	7	1	2

EROSION CONTROL SCHEDULE

LOCATION				21101615 TOPSOIL FURNISH AND PLACE, 4"	25000210 SEEDING CLASS 2A	25000400 NITROGEN FERTILIZER NUTRIET	25000500 PHOSPHOROUS FERTILIZER NUTRIENT	25000600 POTASSIUM FERTILIZER NUTRIENT	25100630 EROSION CONTROL BLANKET	28000250.0 TEMPORARY EROSION CONTROL SEEDING	28000400 PERIMETER EROSION BARRIER	COMMENT
STATION	TO	STATION	LT/RT	SQ YD	ACRE	POUND	POUND	POUND	SQ YD	POUND	FOOT	
FAS 1476 (OLD US RTE 51) (RURAL)												
239+99	TO	240+92	RT	84	0.02	1.6	1.6	1.6	84	1.7	97	SHOULDER WIDENING
240+46	TO	241+59	LT	123	0.03	2.3	2.3	2.3	123	2.6	116	SHOULDER WIDENING
243+33	TO	243+98	RT	53	0.01	1.0	1.0	1.0	53	1.1	65.5	SHOULDER WIDENING
243+61	TO	244+50	LT	57	0.01	1.1	1.1	1.1	57	1.2	87.5	SHOULDER WIDENING
255+39	TO	256+35	RT	94	0.02	1.7	1.7	1.7	94	1.9	97	SHOULDER WIDENING
257+52	TO	258+46	RT	63	0.01	1.2	1.2	1.2	63	1.3	94	SHOULDER WIDENING
260+64	TO	261+49	RT	93	0.02	1.7	1.7	1.7	93	1.9	94	SHOULDER WIDENING
260+65	TO	261+56	LT	45	0.01	0.8	0.8	0.8	45	0.9	89.5	SHOULDER WIDENING
262+97	TO	263+91	RT	132	0.03	2.5	2.5	2.5	132	2.7	103	SHOULDER WIDENING
263+02	TO	263+94	LT	96	0.02	1.8	1.8	1.8	96	2.0	96	SHOULDER WIDENING
298+03	TO	299+00	RT	105	0.02	1.9	1.9	1.9	105	2.2	98.5	SHOULDER WIDENING
300+66	TO	301+69	RT	167	0.03	3.1	3.1	3.1	167	3.4	116	SHOULDER WIDENING
SUBTOTAL				1112	0.23	20.7	20.7	20.7	1112	23.0	1154	
USE				1210	0.25	23	23	23	1210	25	1154	
TOTAL				1210	0.25	23	23	23	1210	25	1154	

PERMANENT AND TEMPORARY PAVEMENT MARKING SCHEDULE

LOCATION						78001110 PAINT PAVEMENT MARKING - LINE 4"	78000400 THERMOPLASTIC PAVEMENT MARKING - LINE 6"	78000650 THERMOPLASTIC PAVEMENT MARKING - LINE 24"	78011035 GROOVING FOR RECESSED PAVEMENT MARKING 7"	78011125 GROOVING FOR RECESSED PAVEMENT MARKING 25""	78001180 PAINT PAVEMENT MARKING - LINE 24"	78100100 RAISED REFLECTIVE PAVEMENT MARKER TWO-WAY AMBER
STATION	TO	STATION	LOCATION	TYPE	LENGTH	FOOT	FOOT	FOOT	FOOT	FOOT	FOOT	EACH
OR 2 (OLD US 51) (RURAL)												
54+60	TO	71+68	EDGE LINE, LT	SOLID-WHITE	1723	1723						
54+85	TO	71+68	EDGE LINE, RT	SOLID-WHITE	1683	1683						
54+85			STOP BAR	SOLID-WHITE	13						13	
55+00	TO	71+68	CENTER LINE	SKIP-DASH	1668	417						21
71+68	TO	80+20	EDGE LINE, LT & RT	SOLID-WHITE	852	1704						
			CENTER LINE	SOLID-YELLOW	852	852						11
				SKIP-DASH	852	213						
80+20	TO	82+00	CENTER LINE	SOLID YELLOW	180	360						4
			EDGE LINE, LT & RT	SOLID-WHITE	180	360						
82+00	TO	89+27	CENTER LINE	SOLID-YELLOW	727	727						9
				SKIP-DASH	727	182						
			EDGE LINE	SOLID-WHITE	727	1454						
89+27	TO	106+46	CENTER LINE	SKIP-DASH	1718	430						21
			EDGE LINE, LT	SOLID-WHITE	1718	1561						
			EDGE LINE, RT	SOLID-WHITE	1718	1604						
SUBTOTAL						13270					13	66
FAS 1476 (OLD US 51) (URBAN)												
107+45	TO	110+31	EDGE LINE	SOLID-WHITE	286	572						
107+45	TO	117+57	CENTER LINE	SKIP-DASH	1012	253						13
PRAIRIE STREET INTERSECTION			CROSS WALK	SOLID-WHITE	120.1		120		120			
			STOP BAR	SOLID-WHITE	23.5			24		24		
MAIN STREET INTERSECTION			CROSS WALK	SOLID-WHITE	144.2		144		144			
			STOP BAR	SOLID-WHITE	31.9			32		32		
CLARKE STREET INTERSECTION			CROSS WALK	SOLID-WHITE	139		139		139			
			STOP BAR	SOLID-WHITE	29.8			30		30		
RANDOLPH STREET INTERSECTION			CROSS WALK	SOLID-WHITE	646		65		65			
			STOP BAR	SOLID-WHITE	12			12		12		
117+57	TO	123+82	CENTER LINE	SOLID-YELLOW	625	625						8
				SKIP-DASH	625	156						
123+82	TO	129+80	CENTER LINE	SOLID-YELLOW	598	1196						14
125+14	TO	129+80	EDGE LINE	SOLID-WHITE	466	932						
129+80	TO	137+25	CENTER LINE	SOLID-YELLOW	745	745						9
				SKIP-DASH	745	186						
			EDGE LINE	SOLID-WHITE	745	1490						
137+25	TO	138+95	CENTER LINE	SKIP-DASH	170	43						2
			EDGE LINE	SOLID-WHITE	170	340						
138+95	TO	146+71	CENTER LINE	SOLID-YELLOW	776	776						
				SKIP-DASH	776	194						10
			EDGE LINE	SOLID-WHITE	776	1552						
146+71	TO	147+58	CENTER LINE	SOLID-YELLOW	87	174						4
			EDGE LINE	SOLID-WHITE	87	174						
SUBTOTAL						9408	468	98	468	98		60

MODEL: Border
FILE NAME: S:\PROJECTS\2023\1371D23_IDOT05\WO 1 Contract 70G11\DESIGN_70G11\CAD Sheets\WHAID570G11_Border.dgn

WILLETT HOFMANN & ASSOCIATES INC
ENGINEERING ARCHITECTURE LAND SURVEYING
801 EAST ENGLISH STREET, DANVILLE, ILLINOIS 61832
T 815 284 3381 DESIGNFIRM # 184 000919

USER NAME = afull	DESIGNED - AMF	REVISED -	
	DRAWN - TJA	REVISED -	
PLOT SCALE = 0.16666633 ' / in.	CHECKED - GFS	REVISED -	
PLOT DATE = 3/5/2024	DATE -	REVISED -	

STATE OF ILLINOIS
DEPARTMENT OF TRANSPORTATION

SCHEDULE OF QUANTITIES

SCALE: N/A | SHEET 2 OF 5 SHEETS | STA. TO STA.

F.A. RTE.	SECTION	COUNTY	TOTAL SHEETS	SHEET NO.
*	(55/56)RS-5,57-1(1)RS-1	MCLEAN	85	22

CONTRACT NO. 70G11

ILLINOIS | FED. AID PROJECT

SCHEDULE OF QUANTITIES

PERMANENT AND TEMPORARY PAVEMENT MARKING SCHEDULE - CONTINUED

LOCATION						78001110 PAINT PAVEMENT MARKING - LINE 4"	78000400 THERMOPLASTIC PAVEMENT MARKING - LINE 6"	78000650 THERMOPLASTIC PAVEMENT MARKING - LINE 24"	78011035 GROOVING FOR RECESSED PAVEMENT MARKING 7"	78011125 GROOVING FOR RECESSED PAVEMENT MARKING 25""	78001180 PAINT PAVEMENT MARKING - LINE 24"	78100100 RAISED REFLECTIVE PAVEMENT MARKER TWO-WAY AMBER
STATION	TO	STATION	LOCATION	TYPE	LENGTH	FOOT	FOOT	FOOT	FOOT	FOOT	FOOT	EACH
FAS 1476 (OLD US 51) (RURAL)												
147+58	TO	150+24	CENTER LINE	SOLID-YELLOW	266	532						6
			EDGELINE	SOLID-WHITE	266	532						
150+24	TO	158+18	CENTER LINE	SKIP-DASH	794	199						
				SOLID-YELLOW	794	794						10
			EDGE LINE	SOLID-WHITE	794	1496						
158+18	TO	176+51	CENTER LINE	SKIP-DASH	1833	458						23
			EDGE LINE	SOLID-WHITE	1833	3530						
176+51	TO	189+06	CENTER LINE	SKIP-DASH	1255	314						16
			EDGE LINE	SOLID-WHITE	1255	2510						
189+06	TO	205+98	CENTER LINE	SKIP-DASH	1692	423						
				SOLID-YELLOW	1692	1692						21
			EDGE LINE	SOLID-WHITE	1692	3316						
205+98	TO	228+74	CENTER LINE	SKIP-DASH	2276	569						28
			EDGE LINE	SOLID-WHITE	2276	4484						
228+74	TO	238+30	CENTER LINE	SKIP-DASH	956	239						
				SOLID-YELLOW	956	956						12
			EDGE LINE	SOLID-WHITE	956	1817						
238+30	TO	248+78	CENTER LINE	SOLID-YELLOW	1048	2096						26
			EDGE LINE	SOLID-WHITE	1048	2042						
248+78	TO	255+92	CENTER LINE	SKIP-DASH	714	179						
				SOLID-YELLOW	714	714						9
			EDGE LINE	SOLID-WHITE	714	1396						
255+92	TO	258+25	CENTER LINE	SOLID-YELLOW	233	466						6
			EDGE LINE	SOLID-WHITE	233	466						
258+25	TO	266+04	CENTER LINE	SKIP-DASH	779	195						
				SOLID-YELLOW	779	779						10
			EDGE LINE	SOLID-WHITE	779	1503						
266+04	TO	315+17	CENTER LINE	SOLID-YELLOW	4913	9826						122
			EDGE LINE	SOLID-WHITE	4913	9580						
315+17	TO	325+16	CENTER LINE	SKIP-DASH	999	250						
				SOLID-YELLOW	999	999						12
			EDGE LINE	SOLID-WHITE	999	1998						
325+16	TO	331+87	CENTER LINE	SKIP-DASH	671	168						8
			EDGE LINE	SOLID-WHITE	671	1342						
331+87	TO	336+09	CENTER LINE	SKIP-DASH	422	106						
				SOLID-YELLOW	422	422						5
			EDGE LINE	SOLID-WHITE	422	767						
336+09	TO	347+91	CENTER LINE	SOLID-YELLOW	1182	2364						30
			EDGE LINE	SOLID-WHITE	1182	2222						
347+91	TO	368+66	CENTER LINE	SKIP-DASH	2075	520						26
			EDGE LINE	SOLID-WHITE	2075	4150						
368+66	TO	378+50	CENTER LINE	SKIP-DASH	984	246						
				SOLID-YELLOW	984	984						12
			EDGE LINE	SOLID-WHITE	984	1968						
378+50	TO	380+64	CENTER LINE	SOLID-YELLOW	214	428						6
			EDGE LINE	SOLID-WHITE	214	166						
380+64	TO	388+55	CENTER LINE	SKIP-DASH	791	198						
				SOLID-YELLOW	791	791						10
			EDGE LINE	SOLID-WHITE	791	1582						
388+55	TO	420+58	CENTER LINE	SKIP-DASH	3203	801						40
			EDGE LINE	SOLID-WHITE	3203	6406						
SUBTOTAL						81981						438
FAU 6380 (OLD US 51) (URBAN)												
420+58	TO	422+67	CENTER LINE	SKIP-DASH	209	52						3
			EDGE LINE	SOLID-WHITE	209	418						
422+67	TO	434+91	CENTER LINE	SOLID-YELLOW	1226	2452						30
			EDGE LINE	SOLID-WHITE	1200	2195						
434+91			STOP BAR	SOLID-WHITE	21						21	
701+28	TO	703+63	CENTER LINE	SOLID-YELLOW	235	470						6
			EDGE LINE	SOLID-WHITE	235	470						
703+63	TO	710+73	CENTER LINE	SKIP-DASH	710	178						9
			EDGE LINE	SOLID-WHITE	710	1260						
709+75			STOP BAR	SOLID-WHITE	12.5						13	
710+41			STOP BAR	SOLID-WHITE	11						11	
SUBTOTAL						7495					45	48
TOTAL						112154	468	98	468	98	58	612

NOTE: IF REQUIRED BY JOB CONDITIONS, THE CONTRACTOR SHALL PROVIDE TEMPORARY PAINT PAVEMENT MARKINGS IN THE QUANTITY AND LOCATIONS OUTLINED ON THE ABOVE SCHEDULE.
IF REQUIRED, TEMPORARY PAINT PAVEMENT MARKINGS SHALL BE PROVIDED OF THE WIDTH AND COLOR SCHEDULED IN LIEU OF THE THERMOPLASTIC PAVEMENT MARKINGS INDICATED.

INLET FILTER SCHEDULE

LOCATION			28000510 INLET FILETERS
STATION	OFFSET	LT/RT	EACH
OR 2 (OLD US RTE 51) (RURAL)			
95+32	25'	LT	1
95+85	24'	LT	1
98+57	27'	LT	1
99+12	24'	LT	1
101+40	22'	RT	1
101+40	22'	LT	1
102+09	22'	RT	1
103+85	22'	RT	1
SUBTOTAL			8
FAS 1476 (OLD US RTE 51) (URBAN)			
108+02	22'	LT	1
110+51	32'	RT	1
110+52	20'	RT	1
110+53	20'	LT	1
113+65	15'	RT	1
113+65	15'	LT	1
114+38	21'	RT	1
114+52	42'	LT	1
114+82	42'	LT	1
116+50	15'	RT	1
116+50	15'	LT	1
117+46	15'	RT	1
117+46	15'	LT	1
118+44	35'	LT	1
118+79	44'	LT	1
118+80	33'	LT	1
119+96	15'	RT	1
120+02	22'	LT	1
120+43	49'	RT	1
120+93	15'	LT	1
120+96	15'	RT	1
123+02	15'	LT	1
SUBTOTAL			22
FAS 1476 (OLD US RTE 51) (RURAL)			
332+72	24'	LT	1
333+29	24'	LT	1
SUBTOTAL			2
TOTAL			32

SURVEY MARKER SCHEDULE

PT NO.	NORTHING	EASTING	STATION	OFFSET	LT/RT	DESCRIPTION	TYPE	RESET AFTER CONSTRUCTION
OR 2 (OLD US 51) (RURAL)								
101	1323063.478	804534.224	54+44.58	0.00	RT	INT POINT	MAG NAIL	TYPE 2 (SPECIAL)
5	1323137.699	804533.464	55+18.80	0.00	RT	PI	MAG NAIL	TYPE 2 (SPECIAL)
80	1323447.982	804530.289	58+29.10	0.00	RT	PI	MAG NAIL	TYPE 2 (SPECIAL)
81	1325355.100	804502.273	77+36.43	0.00	RT	PI	MAG NAIL	TYPE 2 (SPECIAL)
PC10	1326209.169	804489.020	85+90.60	0.00	RT	PC	MAG NAIL	TYPE 2 (SPECIAL)
PT10	1327151.696	804248.632	95+72.25	0.00	RT	PT	MAG NAIL	TYPE 2 (SPECIAL)
PC82	1327359.569	804139.372	98+07.09	0.00	RT	PC	MAG NAIL	TYPE 2 (SPECIAL)
PT82	1328207.756	803918.709	106+91.24	0.00	RT	PT	MAG NAIL	TYPE 2 (SPECIAL)
SUBTOTAL								8
FAS 1476 (OLD US 51) (URBAN)								
PC83	1329743.031	803880.159	122+27.00	0.00	RT	PC	MAG NAIL	TYPE 2 (SPECIAL)
PT83	1330466.178	803640.747	129+99.88	0.00	RT	PT	MAG NAIL	TYPE 2 (SPECIAL)
PC85	1331496.015	802914.334	142+60.13	0.00	RT	PC	MAG NAIL	TYPE 2 (SPECIAL)
SUBTOTAL								3
FAS 1467 (OLD US 51) (RURAL)								
PT85	1333524.889	802802.874	164+02.06	0.00	RT	PT	MAG NAIL	TYPE 2 (SPECIAL)
PC86	1333719.977	802910.607	166+24.92	0.00	RT	PC	MAG NAIL	TYPE 2 (SPECIAL)
PT86	1334705.523	803150.935	176+51.35	0.00	RT	PT	MAG NAIL	TYPE 2 (SPECIAL)
SWR14	1335536.901	803129.160	184+83.01	0.00	RT	PI	MAG NAIL	TYPE 2 (SPECIAL)
C87	1339252.646	803033.143	221+99.98	2.33	LT	PI	MAG NAIL	TYPE 2 (SPECIAL)
C88	1341040.035	803011.856	239+87.48	1.41	RT	PI	MAG NAIL	TYPE 2 (SPECIAL)
C89	1343669.369	802950.816	266+17.51	1.91	RT	PI	MAG NAIL	TYPE 2 (SPECIAL)
44	1344753.519	802909.042	277+02.46	0.00	RT	PI	MAG NAIL	TYPE 2 (SPECIAL)
C90	1350122.862	802709.557	330+75.35	7.20	LT	PI	MAG NAIL	TYPE 2 (SPECIAL)
C91	1351389.119	802741.266	343+41.81	4.09	RT	PI	MAG NAIL	TYPE 2 (SPECIAL)
92	1354936.436	802713.997	378+89.19	0.00	RT	PI	MAG NAIL	TYPE 2 (SPECIAL)
PC139	1356709.429	802689.023	396+62.36	0.00	RT	PC	MAG NAIL	TYPE 2 (SPECIAL)
PT139	1357362.553	802607.131	403+21.94	0.00	RT	PT	MAG NAIL	TYPE 2 (SPECIAL)
PC140	1357583.987	802554.025	405+49.66	0.00	RT	PC	MAG NAIL	TYPE 2 (SPECIAL)
PT140	1358215.125	802468.818	411+87.61	0.00	RT	PT	MAG NAIL	TYPE 2 (SPECIAL)
SUBTOTAL								15
FAU 6380 (OLD US 51) (URBAN)								
68	1359923.903	802412.396	428+97.32	0.00	RT	PI	MAG NAIL	TYPE 2 (SPECIAL)
PC144	1360103.070	802405.291	430+76.63	0.00	RT	PC	MAG NAIL	TYPE 2 (SPECIAL)
144	1360281.668	802398.209	432+54.20	12.50	RT	PI	MAG NAIL	TYPE 2 (SPECIAL)
PT144	1360451.390	802342.161	434+31.77	0.00	RT	PT	MAG NAIL	TYPE 2 (SPECIAL)
145	1360531.777	802315.615	435+16.43	0.00	RT	INT POINT	MAG NAIL	TYPE 2 (SPECIAL)
SUBTOTAL								5
TOTAL								31

SHORT TERM PAVEMENT MARKING SCHEDULE

LOCATION						70300100 SHORT TERM PAVEMENT MARKING			70300150 SHORT TERM PAVEMENT MARKING REMOVAL
STATION	TO	STATION	LOCATION	TYPE	LENGTH	FOOT	APPLY AFTER	COLOR	SQ FT
OR 2 (OLD US 51) (RURAL)									
54+57	TO	106+45	CL	SKIP-DASH	5188	1548	MILLING, PRIME & HMA SURFACE	YELLOW	511
SUBTOTAL						1548			511
FAS 1476 (OLD US 51) (URBAN)									
107+45	TO	133+24	CL	SKIP-DASH	2579	768	MILLING, PRIME & HMA SURFACE	YELLOW	253
134+15	TO	147+58	CL	SKIP-DASH	1343	396	MILLING, PRIME & HMA SURFACE	YELLOW	131
SUBTOTAL						1164			384
FAS 1476 (OLD US 51) (RURAL)									
147+58	TO	158+20	CL	SKIP-DASH	1062	312	MILLING, PRIME & HMA SURFACE	YELLOW	103
161+23	TO	420+58	CL	SKIP-DASH	25935	7776	MILLING, PRIME & HMA SURFACE	YELLOW	2566
SUBTOTAL						8088			2669
FAU 6380 (OLD US 51) (URBAN)									
420+58	TO	435+16	CL	SKIP-DASH	1458	432	MILLING, PRIME & HMA SURFACE	YELLOW	143
701+28	TO	710+73	CL	SKIP-DASH	945	276	MILLING, PRIME & HMA SURFACE	YELLOW	91
SUBTOTAL						708			234
TOTAL						11508			3798

MODEL: Border
FILE NAME: S:\PROJECTS\2023\1371D23_IDOTD5\WO 1 Contract 70G11\DESIGN_70G11\CAD_Sheets\WHAID570G11_Border.dgn

WILLETT HOFMANN & ASSOCIATES INC
809 EAST 200 STREET, DANVILLE, ILLINOIS 61832-5367
T: 217 446 3081 FAX: 217 446 3082 E: 844 900 9189

USER NAME = afull	DESIGNED - AMF	REVISED -	
	DRAWN - TJA	REVISED -	
PLOT SCALE = 0.16666633 ' / in.	CHECKED - GFS	REVISED -	
PLOT DATE = 3/5/2024	DATE -	REVISED -	

STATE OF ILLINOIS
DEPARTMENT OF TRANSPORTATION

SCHEDULE OF QUANTITIES

SCALE: N/A | SHEET 3 OF 5 SHEETS | STA. | TO STA.

F.A. RTE.	SECTION	COUNTY	TOTAL SHEETS	SHEET NO.
*	(55/56)RS-5,57-1(1)RS-1	MCLEAN	85	23
		CONTRACT NO. 70G11		
	ILLINOIS	FED. AID PROJECT		

SCHEDULE OF QUANTITIES

INCIDENTAL HMA PAVING SCHEDULE

LOCATION				WIDTH (MAINLINE EOP TO OUTSIDE EDGE)	40600290 BITUMINOUS MATERIALS (TACK COAT)	40600990 TEMPORARY RAMP	40800050 INCIDENTAL HOT-MIX ASPHALT SURFACING	X4400196 HOT-MIX ASPHALT SURFACE REMOVAL (SPECIAL)
STATION	LT/RT	DESCRIPTION	MATERIAL	FOOT	POUND	SQ YD	TON	SQ. YD.
OR 2 (OLD US 51) (RURAL)								
54+57	LT/RT	100 N ROAD	HMA			43		
68+41	LT	FIELD ENTRANCE	AGG	3	5		1	10
80+77	RT	FIELD ENTRANCE	AGG	3	5		1	12
80+85	LT	PRIVATE ENTRANCE	HMA	10	18		3	39
81+06	RT	FIELD ENTRANCE	AGG	3	4		1	8
86+11	RT	COMM. ENTRANCE	CONC	9.7	48		9	107
87+32	LT	COMM. ENTRANCE	AGG	4.8	21		4	46
90+10	LT	COMM. ENTRANCE	AGG	9.5	26		5	58
90+22	RT	BUCHANAN STREET	HMA	10	41	39	8	91
91+98	LT	COMM. ENTRANCE	AGG	9.8	27		5	60
93+54	LT	COMM. ENTRANCE	AGG	9.3	22		4	48
95+60	LT	POPLAR STREET	HMA	8.8	23	27	4	51
98+83	LT	OAK STREET	HMA	10	26	27	5	57
103+55	RT	SULLIVAN STREET	HMA	8.5	18	22	3	41
106+45	LT/RT	US RTE 136 (SOUTH)	HMA			24		
SUBTOTAL					284	182	53	628
FAS 1476 (OLD US 51) (URBAN)								
107+45	LT/RT	US RTE 136 (NORTH)	HMA			24		
110+75	RT	PRAIRIE STREET	HMA	45	52	12	14	117
110+80	LT	PRAIRIE STREET	HMA	45	58	12	11	129
114+65	RT	MAIN STREET	HMA	41	76	23	22	170
114+67	LT	MAIN STREET	HMA	46	61	13	16	136
118+60	RT	CLARKE STREET	HMA	43	62	15	16	137
118+63	LT	CLARKE STREET	HMA	45	67	17	25	149
120+27	LT	RANDOLPH STREET	HMA	45	59	12	12	131
124+41	RT	PETERSON COURT	HMA	10	19	19	4	43
126+52	RT	PRIVATE ENTRANCE	CONC	10	10		2	22
127+12	RT	PRIVATE ENTRANCE	AGG	10	10		2	22
133+24	LT/RT	STR. 057-0225 (SOUTH)	CONC			15		
134+15	LT/RT	STR. 057-0225 (NORTH)	CONC			15		
135+22	RT	COMM. ENTRANCE	AGG	10	26		5	58
136+20	LT	COMM. ENTRANCE	AGG	8	8		2	18
139+41	RT	PRIVATE ENTRANCE	HMA	10	19		4	43
140+00	LT	MAILBOX T.O.	HMA	7	15		3	33
145+89	RT	PRIVATE ENTRANCE	HMA	10	22		4	48
146+86	LT	MAILBOX T.O.	HMA	6	12		2	27
SUBTOTAL					576	177	144	1283
FAS 1476 (OLD US 51) (RURAL)								
148+76	LT	PRIVATE ENTRANCE	AGG	10	52		10	117
156+26	RT	275 N ROAD	HMA	10	58	38	11	129
158+20	LT/RT	STR. 057-0056 (SOUTH)	CONC			18		
161+23	LT/RT	STR. 057-0056 (NORTH)	CONC			19		
167+03	LT	300 N ROAD	HMA	10	48	45	9	107
175+26	RT	FIELD ENTRANCE	AGG	3	4		1	10
180+86	RT	PRIVATE ENTRANCE	AGG	10	23		4	50
181+25	LT	PRIVATE ENTRANCE	CONC	10	16		3	36
183+49	LT	PRIVATE ENTRANCE	HMA	10	12		2	26
183+61	RT	PRIVATE ENTRANCE	AGG	10	15		3	34
184+83	RT	FIELD ENTRANCE	AGG	3	2		0	5
192+87	RT	FIELD ENTRANCE	AGG	3	4		1	8
193+33	LT	350 N ROAD	HMA	10	23	21	4	51
197+22	LT	PRIVATE ENTRANCE	HMA	10	17		3	37
206+32	RT	PRIVATE ENTRANCE	AGG	10	14		3	31
206+35	LT	PRIVATE ENTRANCE	AGG	8.2	12		2	26
207+49	RT	COMM. ENTRANCE	CONC	10	49		9	108
211+00	RT	COMM. ENTRANCE	CONC	10	37		7	82
215+98	RT	COMM. ENTRANCE	CONC	10	26		5	58
218+18	RT	PRIVATE ENTRANCE	AGG	10	14		3	30
219+97	LT	400 N ROAD	HMA	10	27	26	5	59
222+22	LT	PRIVATE ENTRANCE	AGG	3	4		1	8
223+29	RT	PRIVATE ENTRANCE	AGG	3	4		1	10
225+34	RT	MAILBOX T.O.	HMA	3	5		1	12
225+37	LT	PRIVATE ENTRANCE	AGG	9	7		1	15
229+97	RT	MAILBOX T.O.	HMA	3.8	6		1	14
230+10	LT	PRIVATE ENTRANCE	AGG	3	6		1	14
230+37	RT	425 N ROAD	HMA	10	23	21	4	50
231+37	LT	COUNTRY LANE	HMA	10	16	14	3	36
231+95	RT	PRIVATE ENTRANCE	AGG	10	16		3	36
232+77	LT	PRIVATE ENTRANCE	HMA	10	9		2	21
234+49	RT	PRIVATE ENTRANCE	HMA	10	14		3	30

INCIDENTAL HMA PAVING SCHEDULE - CONTINUED

LOCATION				WIDTH (MAINLINE EOP TO OUTSIDE EDGE)	40600290 BITUMINOUS MATERIALS (TACK COAT)	40600990 TEMPORARY RAMP	40800050 INCIDENTAL HOT-MIX ASPHALT SURFACING	X4400196 HOT-MIX ASPHALT SURFACE REMOVAL (SPECIAL)
STATION	LT/RT	DESCRIPTION	MATERIAL	FOOT	POUND	SQ YD	TON	SQ. YD.
FAS 1476 (OLD US 51) (RURAL) - CONTINUED								
238+24	LT	PRIVATE ENTRANCE	AGG	2	3		1	7
238+97	RT	PRIVATE ENTRANCE	HMA	10	20		4	45
244+20	RT	PRIVATE ENTRANCE	HMA	10	20		4	44
245+44	RT	MAILBOX T.O.	HMA	5.5	11		2	24
246+05	RT	PRIVATE ENTRANCE	HMA	10	12		2	28
246+21	LT	450 N ROAD	HMA	10	22	21	4	48
248+21	RT	PRIVATE ENTRANCE	AGG	10	17	0	3	38
250+41	RT	CIRCLE DRIVE (SOUTH)	HMA	10	16	16	3	36
253+34	RT	PRIVATE ENTRANCE	AGG	3.5	4		1	9
254+52	RT	PRIVATE ENTRANCE	AGG	3	3		1	7
255+47	LT	PRIVATE ENTRANCE	HMA	10	18		3	40
260+32	RT	CIRCLE DRIVE (NORTH)	HMA	10	19	18	4	42
264+80	RT	PRIVATE ENTRANCE	AGG	6.6	13		3	30
265+84	RT	MAILBOX T.O.	HMA	3	4		1	9
265+86	LT	PRIVATE ENTRANCE	AGG	9.5	11		2	25
268+35	RT	PRIVATE ENTRANCE	HMA	10	14		3	32
271+77	LT	FIELD ENTRANCE	AGG	3	2		1	5
271+83	RT	PRIVATE ENTRANCE	HMA	10	13		2	29
278+92	RT	PRIVATE ENTRANCE	AGG	9	13		3	30
280+98	LT	PRIVATE ENTRANCE	HMA	10	14		3	31
281+05	RT	PRIVATE ENTRANCE	AGG	10	15		3	34
286+04	LT	COUNTRY OAKS RD	HMA	10	18	17	3	40
286+06	RT	COUNTRY OAKS RD	HMA	10	28	28	5	62
291+39	RT	PRIVATE ENTRANCE	HMA	10	13		2	28
291+42	LT	MAILBOX T.O.	HMA	3	5		1	11
293+73	RT	FIELD ENTRANCE	AGG	3	2		1	5
293+80	LT	PRIVATE ENTRANCE	AGG	8	17		3	38
307+38	LT	KNOB HILL DRIVE	HMA	10	31	30	6	70
311+21	LT	FIELD ENTRANCE	AGG	3	4		1	9
311+60	RT	FIELD ENTRANCE	AGG	3	2		1	5
314+35	LT	RHEA DRIVE	HMA	10	31	28	6	69
315+21	LT	PRIVATE ENTRANCE	AGG	8	14		3	30
323+60	LT	FIELD ENTRANCE	AGG	3	2		1	5
330+95	LT	PRIVATE ENTRANCE	AGG	9	18		3	41
333+00	LT	RANDOLPH ROAD (SOUTH)	HMA	11	50	33	9	112
337+65	LT	PRIVATE ENTRANCE	AGG	10	21		4	46
337+95	RT	PRIVATE ENTRANCE	AGG	10	23		4	51
338+89	RT	RANDOLPH ROAD (NORTH)	HMA	10	63	59	12	141
339+85	LT	PRIVATE ENTRANCE	HMA	10	13		2	29
342+13	LT	PRIVATE ENTRANCE	HMA	10	12		2	26
345+00	LT	PRIVATE ENTRANCE	AGG	5	6		1	14
358+67	RT	FIELD ENTRANCE	AGG	3	4		1	8
359+81	LT	FIELD ENTRANCE	AGG	2.5	4		1	9
376+46	LT	FIELD ENTRANCE	AGG	3.5	2		1	4
379+73	RT	700 N ROAD	HMA	10	74	70	14	165
379+89	LT	700 N ROAD	HMA	10	103	87	19	230
387+07	LT	FIELD ENTRANCE	AGG	2	2		1	4
388+30	RT	FIELD ENTRANCE	AGG	3	2		1	5
399+47	RT	FIELD ENTRANCE	AGG	3	2		1	5
408+04	LT	FIELD ENTRANCE	AGG	2.5	2		1	5
417+24	RT	PRIVATE ENTRANCE	AGG	6.7	8		1	17
417+35	LT	FIELD ENTRANCE	AGG	3	2		1	5
SUB TOTAL					1405	609	271	3132
FAU 6380 (OLD US 51) (URBAN)								
421+84	RT	PRIVATE ENTRANCE	CONC	10	12		2	27.7
421+85	LT	PRIVATE ENTRANCE	AGG	8	13		2	28.7
423+05	LT	BRIAN DRIVE	HMA	10	23	22	4	50.7
427+74	LT	MARGO LANE	HMA	10	24	23	4	53.1
432+43	LT	MARK LANE	HMA	10	22	21	4	48.2
701+28	LT/RT	US RTE 51	HMA			12		
702+57	RT	FIELD ENTRANCE	AGG	3	3		1	5.8
703+08	LT	FIELD ENTRANCE	AGG	3	3		1	6.1
709+89	LT	FIELD ENTRANCE	AGG	3	3		1	6.4
710+74	LT/RT	COUNTRY ACRES RD	HMA			12		
SUBTOTAL					103	90	19	227
TOTAL					2368	1058	487	5270

MILLED SURFACE TACK COAT APLICATION RATE: 0.05 LB/SQ FT

INCIDENTAL HOT-MIX ASPHALT SURFACING APPLICATION RATE: 112 LBS/SQ YD/INCH

MODEL: Border
FILE NAME: S:\PROJECTS\2023\1371D23_IDOT\DS\WO 1 Contract 70G11\DESIGN_70G11\CAD_Sheets\WHAIDS70G11_Border.dgn

WILLETT HOFMANN & ASSOCIATES INC
Architecture Structural Civil Transportation
801 EAST 2ND STREET, DIXON, IL 61021-0367
T 815 284 3381 DESIGNFIRM: # 184 000918

USER NAME = afull	DESIGNED - AMF	REVISED -	
	DRAWN - TJA	REVISED -	
PLOT SCALE = 0.16666633 ' / in.	CHECKED - GFS	REVISED -	
PLOT DATE = 3/5/2024	DATE -	REVISED -	

STATE OF ILLINOIS
DEPARTMENT OF TRANSPORTATION

SCHEDULE OF QUANTITIES

SCALE: N/A | SHEET 4 OF 5 SHEETS | STA. TO STA.

F.A. RTE.	SECTION	COUNTY	TOTAL SHEETS	SHEET NO.
*	(55/56)RS-5,57-1(1)RS-1	MCLEAN	85	24

CONTRACT NO. 70G11

ILLINOIS | FED. AID PROJECT

SCHEDULE OF QUANTITIES

SIDEWALK & ADA RAMP SCHEDULE									
LOCATION		REMOVAL ITEMS			PROPOSED ITEMS				
		44000200	44000500	44000600	42300400	42400200	42400800	60604400	X6061700
		DRIVEWAY PAVEMENT REMOVAL	COMBINATION CURB AND GUTTER REMOVAL	SIDEWALK REMOVAL	PORTLAND CEMENT CONCRETE DRIVEWAY PAVEMENT, 8 INCH	PORTLAND CEMENT CONCRETE SIDEWALK 5 INCH	DETECTABLE WARNINGS	COMBINATION CONCRETE CURB AND GUTTER, TYPE B-6.18	COMBINATION CONCRETE CURB AND GUTTER, TYPE B (SPECIAL)
		AREA	LENGTH	AREA	AREA	AREA	AREA	LENGTH	LENGTH
INTERSECTION	QUADRANT	SQ YD	FOOT	SQ FT	SQ YD	SQ FT	SQ FT	FOOT	FOOT
FAS 1476 (OLD US 51) (URBAN)									
PRAIRIE STREET	NW		43.65	138.31		173.36	16		43.65
PRAIRIE STREET	SW		39.48	85.45		118.08	16		39.48
PRAIRIE STREET	NE		46.01	161.49		189.04	16		46.01
PRAIRIE STREET	SE		54.23	256.59		365.67	20.34		54.23
SUBTOTAL			183.37	641.84		846.15	68.34		183.37
MAIN STREET	NW		52.37	157.25		197.94	16		52.37
MAIN STREET	SW		50.32	92.94		136.57	16		50.32
MAIN STREET	NE	15.88	64.34	54.66	7.40	213.43	16	64.34	
MAIN STREET	SE	22.51	57.68	192.47	20.91	211.69	16	57.68	
SUBTOTAL		38.39	224.71	497.32	28.31	759.63	64	122.02	102.69
CLARKE STREET	NW		42.32	186.71		192.91	16		42.32
CLARKE STREET	SW		30.83	137.96		187.15	16		30.83
CLARKE STREET	NE		47.50	92.95		125.01	16		47.50
CLARKE STREET	SE		48.31	63.25		143.12	16		48.31
SUBTOTAL			168.96	480.87		648.19	64		168.96
RANDOLPH STREET	NW		42.43	47.20		46.71	8		42.43
RANDOLPH STREET	SW		17.94	0.00		275.15	8		17.94
SUBTOTAL			60.37	47.20		321.86	16		60.37
TOTAL		38.39	637.41	1667.23	28.31	2575.83	212.34	122.02	515.39
USE		38	637	1667	28	2576	212	122	515

STORM SEWER & UTILITY ADJUSTMENT SCHEDULE									
LOCATION		PROPOSED STORM SEWER					RELOCATIONS & ADJUSTMENTS		
		20800150	550A0050	550A0340	60218500	60236200	60255800	60256400	72400205
		TRENCH BACKFILL	STORM SEWERS, CLASS A, TYPE 1, 12"	STORM SEWERS, CLASS A, TYPE 2, 12"	MANHOLES, TYPE A, 4'-DIAMETER, TYPE 3 FRAME AND GRATE	INLETS, TYPE A, TYPE 8 GRATE	MANHOLES TO BE ADJUSTED WITH NEW TYPE 1 FRAME, CLOSED LID	MANHOLES TO BE ADJUSTED WITH NEW TYPE 8 GRATE	REMOVE & RELOCATE SIGN PANEL ASSEMBLY - TYPE A
		VOLUME	LENGTH	LENGTH	EACH	EACH	EACH	EACH	EACH
INTERSECTION	QUADRANT	CU YD	FOOT	FOOT					
FAS 1476 (OLD US 51) (URBAN)									
PRAIRIE STREET	NW								
PRAIRIE STREET	SW								
PRAIRIE STREET	NE								
PRAIRIE STREET	SE	0.88	11.34			1	1		1
SUBTOTAL		0.88	11.34			1	1		1
MAIN STREET	NW								
MAIN STREET	SW								
MAIN STREET	NE								2
MAIN STREET	SE								
SUBTOTAL									2
CLARKE STREET	NW	19.72		30.09	1				
CLARKE STREET	SW								
CLARKE STREET	NE								
CLARKE STREET	SE								
SUBTOTAL		19.72		30.09	1				
RANDOLPH STREET	NW								
RANDOLPH STREET	SW							1	
SUBTOTAL								1	
TOTAL		20.60	11.34	30.09	1	1	1	1	3
USE		21	11	30	1	1	1	1	3

CURB AND GUTTER SCHEDULE - MAINLINE					
LOCATION					X6061700
					COMBINATION CONCRETE CURB AND GUTTER, TYPE B (SPECIAL)
STATION	TO	STATION	OFFSET	LT/RT	FOOT
FAS 1476 (OLD US RTE 51) (URBAN)					
117+11	TO	117+29	15'	RT	18
SUBTOTAL					18
TOTAL					18

MODEL: Border
FILE NAME: S:\PROJECTS\2023\3171D23_IDOTD5\WO 1 Contract 70G11\DESIGN_70G11\CAD_Sheets\WHAID570G11_Border.dgn

WILLETT HOFMANN & ASSOCIATES INC
ENGINEERING ARCHITECTURE LAND SURVEYING
809 EAST 200 STREET, CHICAGO, IL 61821-0587
T 217 239 3587 FAX CONTRIBUTE T 844 900 9115

USER NAME = afull	DESIGNED - AMF	REVISED -	
	DRAWN - TJA	REVISED -	
PLOT SCALE = 0.16666633 ' / in.	CHECKED - GFS	REVISED -	
PLOT DATE = 3/13/2024	DATE -	REVISED -	

STATE OF ILLINOIS
DEPARTMENT OF TRANSPORTATION

SCHEDULE OF QUANTITIES

SCALE: N/A | SHEET 5 OF 5 SHEETS | STA. | TO STA.

F.A. RTE.	SECTION	COUNTY	TOTAL SHEETS	SHEET NO.
*	(55/56)RS-5,57-1(1)RS-1	MCLEAN	85	25
		CONTRACT NO. 70G11		
	ILLINOIS	FED. AID PROJECT		

STA. 54+56.8 TO STA. 69+00

HOT-MIX ASPHALT PAVEMENT REMOVAL (1 1/2")
POLYMERIZED HOT-MIX ASPHALT SURFACE COURSE, IL-9.5, MIX "C" N70, (168 LBS/SQYD)

HOT-MIX ASPHALT SURFACE REMOVAL (SPECIAL)
INCIDENTAL HOT-MIX ASPHALT SURFACING (168 LBS/SQ YD)

0 50 100 150
SCALE IN FEET

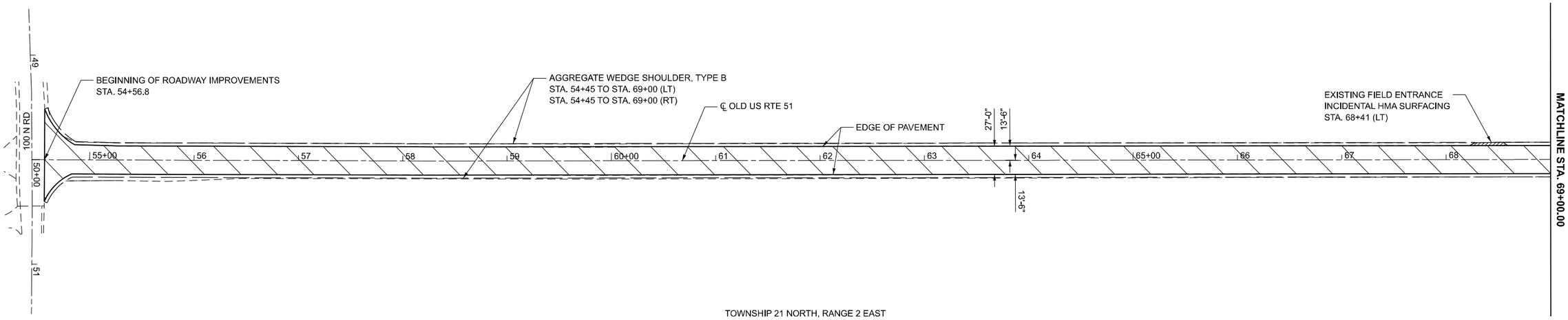

TOWNSHIP 21 NORTH, RANGE 2 EAST

STA. 69+00 TO STA. 84+00

HOT-MIX ASPHALT PAVEMENT REMOVAL (1 1/2")
POLYMERIZED HOT-MIX ASPHALT SURFACE COURSE, IL-9.5, MIX "C" N70, (168 LBS/SQYD)

HOT-MIX ASPHALT SURFACE REMOVAL (SPECIAL)
INCIDENTAL HOT-MIX ASPHALT SURFACING (168 LBS/SQ YD)

0 50 100 150
SCALE IN FEET

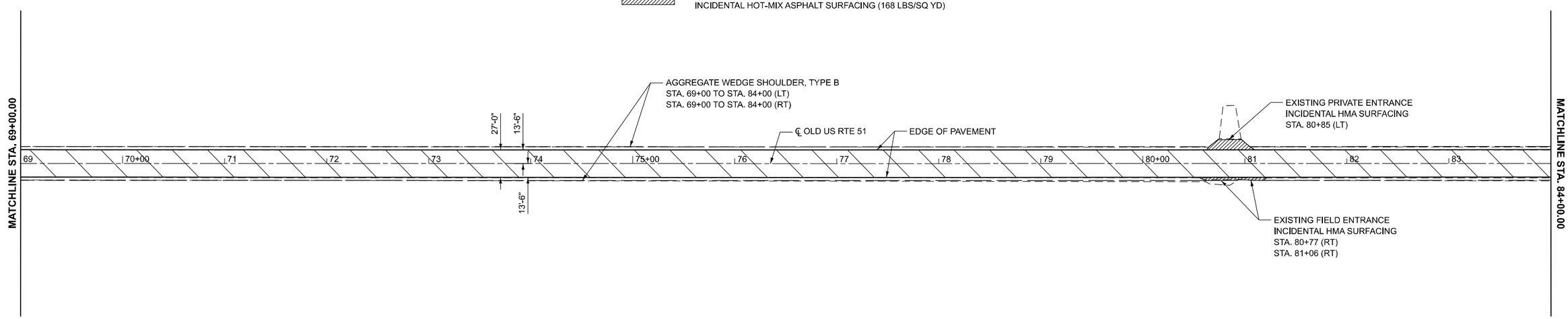

TOWNSHIP 21 NORTH, RANGE 2 EAST

MODEL: Border
FILE NAME: S:\PROJECTS\2023\1371D23_IDOTD5\WO 1 Contract 70G11\DESIGN_70G11\CAD_Sheets\WHA\D570G11_Border.dgn

WILLETT HOFMANN & ASSOCIATES, INC.
ENGINEERING ARCHITECTURE LAND SURVEYING
809 EAST 200 STREET, LOMBARD, IL 60148-4567
T 630 268 3300 F 630 268 3301 WWW.WHA-INC.COM

USER NAME = afull	DESIGNED - AMF	REVISED -	
	DRAWN - TJA	REVISED -	
PLOT SCALE = 0.16666633 ' / in.	CHECKED - GFS	REVISED -	
PLOT DATE = 3/5/2024	DATE -	REVISED -	

STATE OF ILLINOIS
DEPARTMENT OF TRANSPORTATION

PROPOSED ROADWAY PLANS
OLD US RTE 51

SCALE: 1"=50' | SHEET 1 OF 14 SHEETS | STA. 54+56.79 TO STA. 84+00.00

F.A. RTE.	SECTION	COUNTY	TOTAL SHEETS	SHEET NO.
*	(55/56)RS-5,57-1(1)RS-1	MCLEAN	85	26
		CONTRACT NO. 70G11		
	ILLINOIS	FED. AID PROJECT		

STA. 84+00 TO STA. 99+00

HOT-MIX ASPHALT PAVEMENT REMOVAL (1 1/2")
POLYMERIZED HOT-MIX ASPHALT SURFACE COURSE, IL-9.5, MIX "C" N70, (168 LBS/SQYD)

HOT-MIX ASPHALT SURFACE REMOVAL (SPECIAL)
INCIDENTAL HOT-MIX ASPHALT SURFACING (168 LBS/SQ YD)

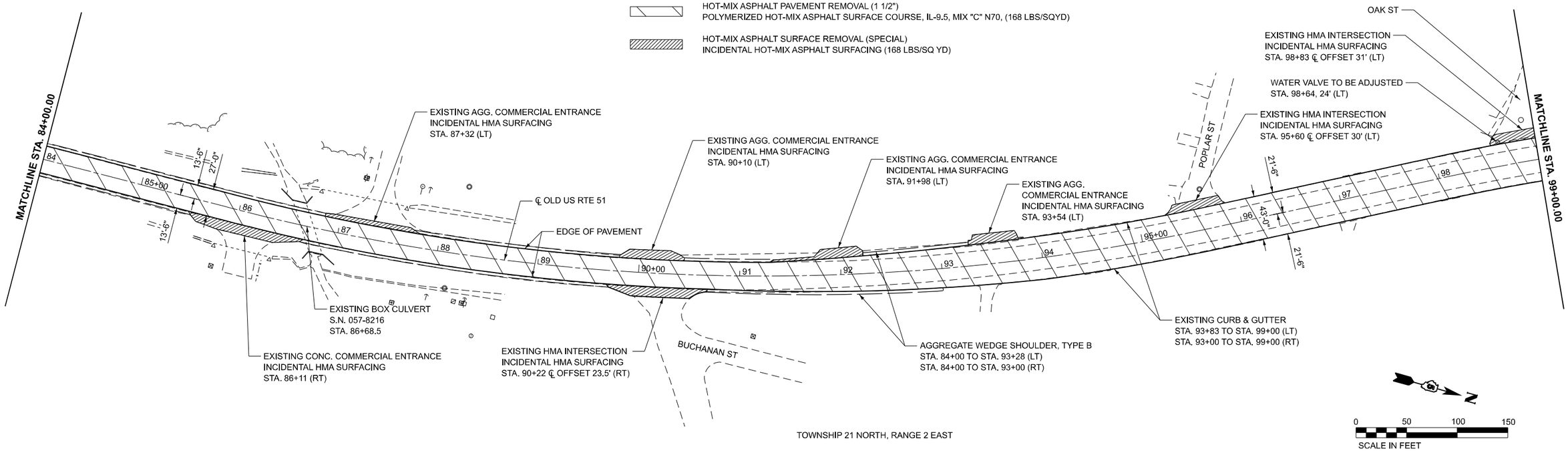

TOWNSHIP 21 NORTH, RANGE 2 EAST

STA. 99+00 TO STA. 106+45 & STA. 107+45 TO STA. 114+00

HOT-MIX ASPHALT PAVEMENT REMOVAL (1 1/2")
POLYMERIZED HOT-MIX ASPHALT SURFACE COURSE, IL-9.5, MIX "C" N70, (168 LBS/SQYD)

HOT-MIX ASPHALT SURFACE REMOVAL (SPECIAL)
INCIDENTAL HOT-MIX ASPHALT SURFACING (168 LBS/SQ YD)

NOTE: REFER TO THE ADA RAMP DETAIL SHEETS FOR ADDITIONAL UTILITY STRUCTURE ADJUSTMENT LOCATIONS

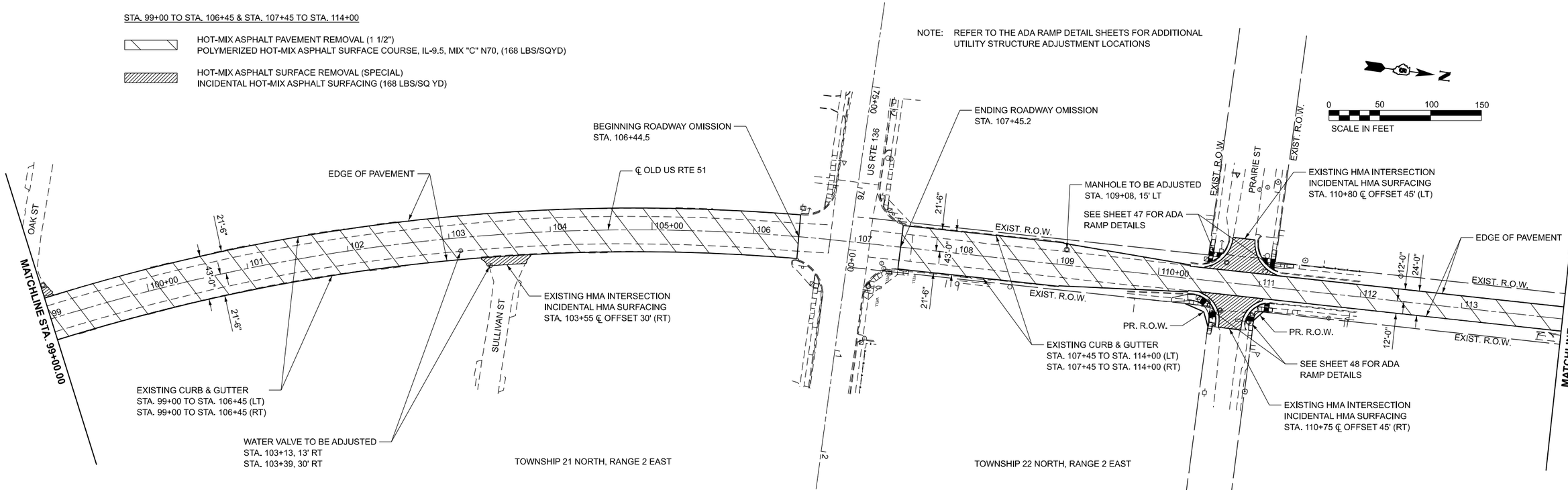

TOWNSHIP 21 NORTH, RANGE 2 EAST

TOWNSHIP 22 NORTH, RANGE 2 EAST

MODEL: Border
FILE NAME: S:\PROJECTS\2023\1371D23_IDOTD5\WO 1 Contract 70G11\DESIGN_70G11\CAD_Sheets\WHAD570G11_Border.dgn

WILLETT HOFMANN & ASSOCIATES INC
ENGINEERING ARCHITECTURE LANDSCAPE ARCHITECTURE
801 EAST DIVISION STREET, DIXON, ILLINOIS 61021
T 815 284 3381 DESIGN FIRM: # 184.000919

USER NAME = afull	DESIGNED - AMF	REVISED -	
	DRAWN - TJA	REVISED -	
PLOT SCALE = 0.16666633 ' / in.	CHECKED - GFS	REVISED -	
PLOT DATE = 3/5/2024	DATE -	REVISED -	

STATE OF ILLINOIS
DEPARTMENT OF TRANSPORTATION

PROPOSED ROADWAY PLANS
OLD US ROUTE 51

SCALE: 1"=50' | SHEET 2 OF 14 SHEETS | STA. 84+00.00 TO STA. 114+00.00

F.A. RTE.	SECTION	COUNTY	TOTAL SHEETS	SHEET NO.
*	(55/56)RS-5,57-1(1)RS-1	MCLEAN	85	27
		CONTRACT NO. 70G11		
	ILLINOIS	FED. AID PROJECT		

NOTE: REFER TO THE ADA RAMP DETAIL SHEETS FOR ADDITIONAL UTILITY STRUCTURE ADJUSTMENT LOCATIONS

STA. 114+00 TO STA. 129+00

HOT-MIX ASPHALT PAVEMENT REMOVAL (1 1/2")
POLYMERIZED HOT-MIX ASPHALT SURFACE COURSE, IL-9.5, MIX "C" N70, (168 LBS/SQYD)

HOT-MIX ASPHALT SURFACE REMOVAL (SPECIAL)
INCIDENTAL HOT-MIX ASPHALT SURFACING (168 LBS/SQ YD)

0 50 100 150
SCALE IN FEET

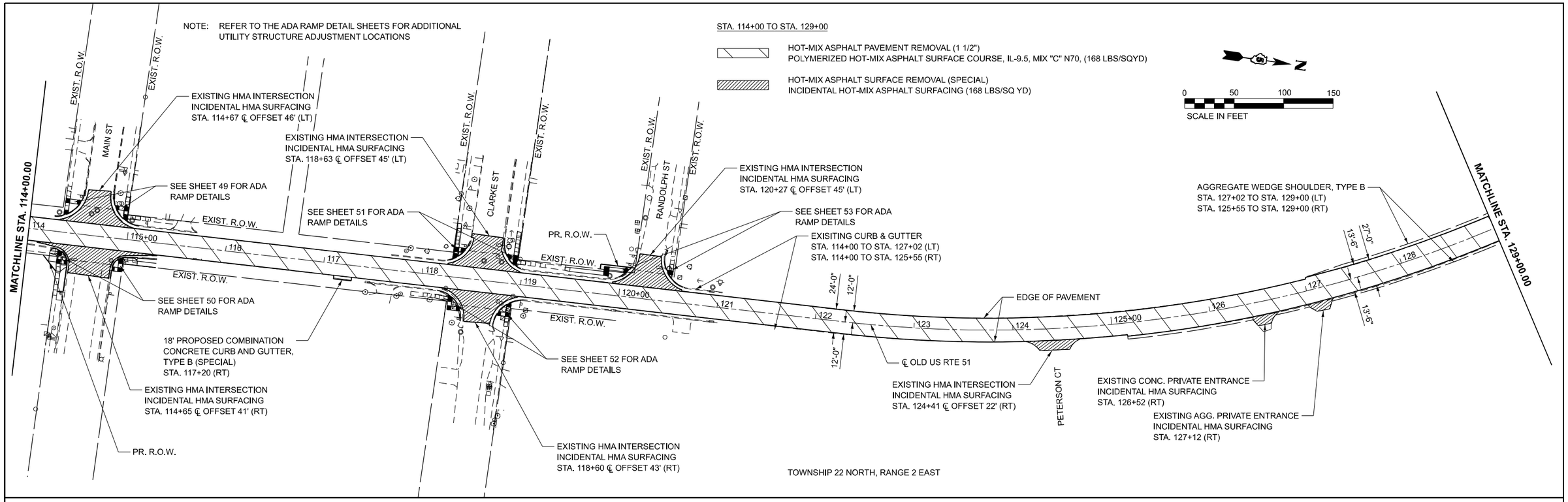

TOWNSHIP 22 NORTH, RANGE 2 EAST

STA. 129+00 TO STA. 144+00

HOT-MIX ASPHALT PAVEMENT REMOVAL (1 1/2")
POLYMERIZED HOT-MIX ASPHALT SURFACE COURSE, IL-9.5, MIX "C" N70, (168 LBS/SQYD)

HOT-MIX ASPHALT SURFACE REMOVAL (SPECIAL)
INCIDENTAL HOT-MIX ASPHALT SURFACING (168 LBS/SQ YD)

TOWNSHIP 22 NORTH, RANGE 2 EAST

0 50 100 150
SCALE IN FEET

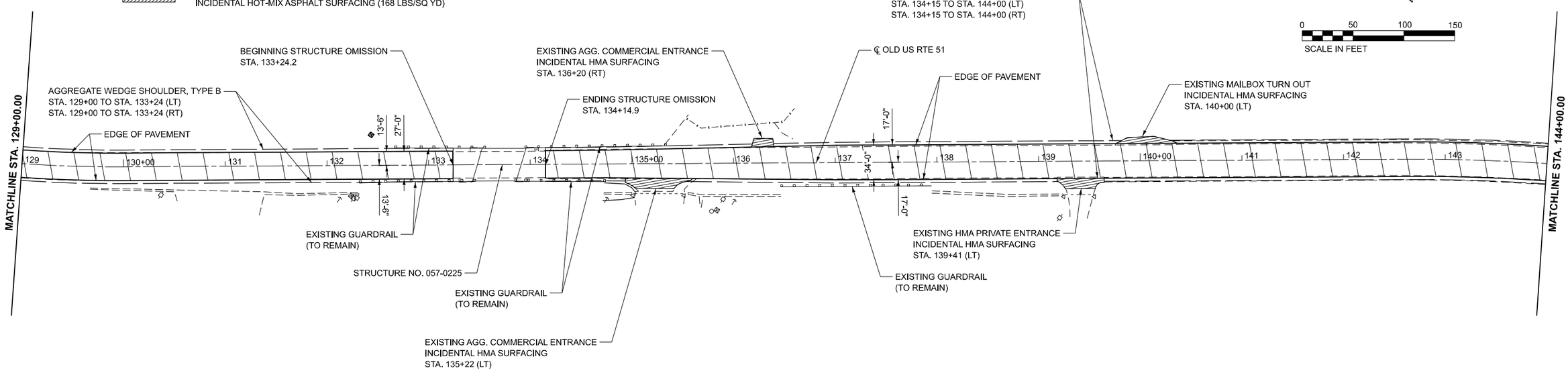

MODEL: Border
FILE NAME: S:\PROJECTS\2023\1371023_IDOT\DS\WO 1 Contract 70G11\DESIGN_70G11\CAD_Sheets\WHAID570G11_Border.dgn

WILLETT HOFMANN & ASSOCIATES INC
PROFESSIONAL DESIGN FIRM 184.000938
809 EAST 2ND STREET, DIXON, IL 61021-0367
T: 815 284 3381 DESIGN FIRM: # 184.000938

USER NAME = afull	DESIGNED - AMF	REVISED -	
	DRAWN - TJA	REVISED -	
PLOT SCALE = 0.16666633 ' / in.	CHECKED - GFS	REVISED -	
PLOT DATE = 3/13/2024	DATE -	REVISED -	

STATE OF ILLINOIS
DEPARTMENT OF TRANSPORTATION

PROPOSED ROADWAY PLANS
OLD US RTE 51

SCALE: 1"=50' | SHEET 3 OF 14 SHEETS | STA. 114+00.00 TO STA. 144+00.00

F.A. RTE.	SECTION	COUNTY	TOTAL SHEETS	SHEET NO.
*	(55/56)RS-5,57-1(1)RS-1	MCLEAN	85	28
		CONTRACT NO. 70G11		
	ILLINOIS	FED. AID PROJECT		

TOWNSHIP 22 NORTH, RANGE 2 EAST

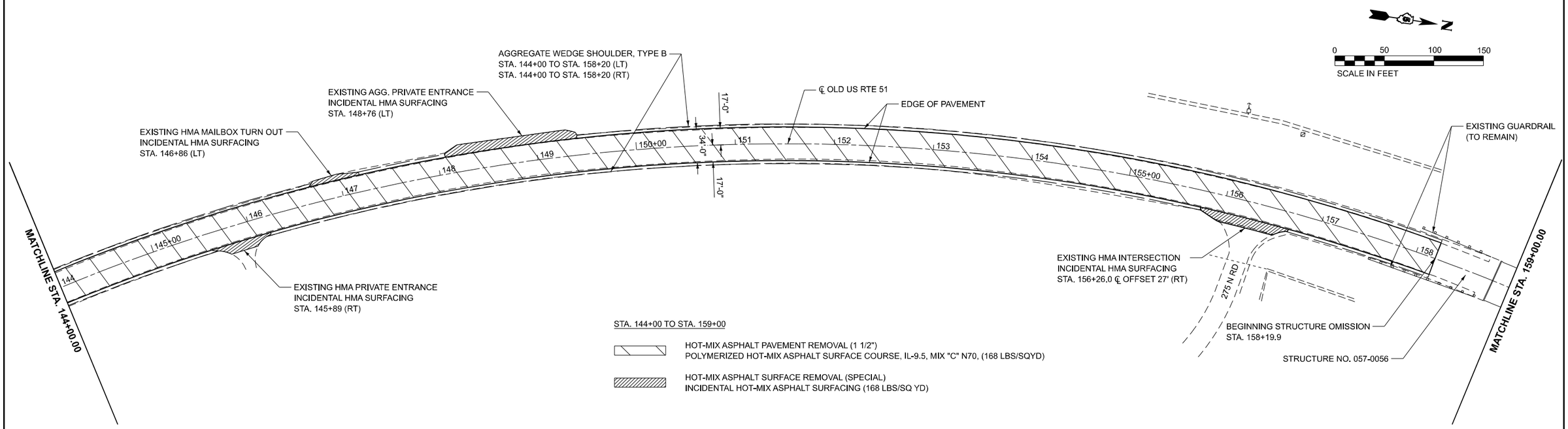

TOWNSHIP 22 NORTH, RANGE 2 EAST

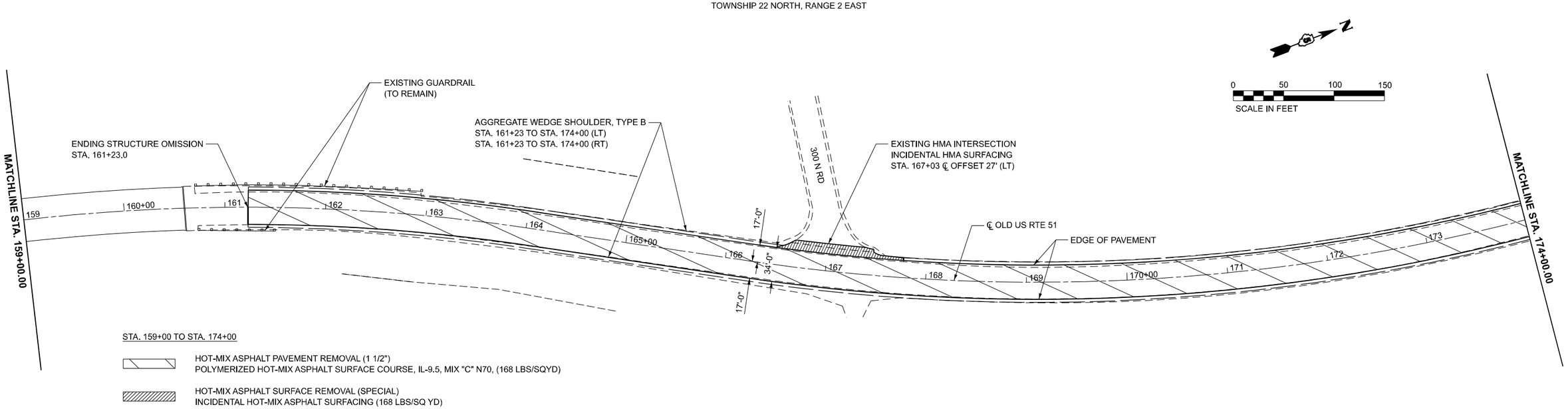

MODEL: Border
FILE NAME: S:\PROJECTS\2023\1371D23_IDOT D5\WO 1 Contract 70G11\DESIGN_70G11\CAD_Sheets\WHA\D570G11_Border.dgn

WILLETT HOFMANN & ASSOCIATES, INC.
PROFESSIONAL ENGINEERS - LAND SURVEYORS
809 EAST 2ND STREET, DIXON, IL 61021-0367
T: 815-284-3081 - DESIGN@WHA-E.COM

USER NAME = afull	DESIGNED - AMF	REVISED -	
	DRAWN - TJA	REVISED -	
PLOT SCALE = 0.16666633 ' / in.	CHECKED - GFS	REVISED -	
PLOT DATE = 3/5/2024	DATE -	REVISED -	

STATE OF ILLINOIS
DEPARTMENT OF TRANSPORTATION

PROPOSED ROADWAY PLANS
OLD US RTE 51

SCALE: 1"=50' | SHEET 4 OF 14 SHEETS | STA. 144+00.00 TO STA. 174+00.00

F.A. RTE.	SECTION	COUNTY	TOTAL SHEETS	SHEET NO.
*	(55/56)RS-5,57-1(1)RS-1	MCLEAN	85	29
		CONTRACT NO. 70G11		
	ILLINOIS	FED. AID PROJECT		

STA. 174+00 TO STA. 189+00

HOT-MIX ASPHALT PAVEMENT REMOVAL (1 1/2")
POLYMERIZED HOT-MIX ASPHALT SURFACE COURSE, IL-9.5, MIX "C" N70, (168 LBS/SQYD)

HOT-MIX ASPHALT SURFACE REMOVAL (SPECIAL)
INCIDENTAL HOT-MIX ASPHALT SURFACING (168 LBS/SQ YD)

0 50 100 150
SCALE IN FEET

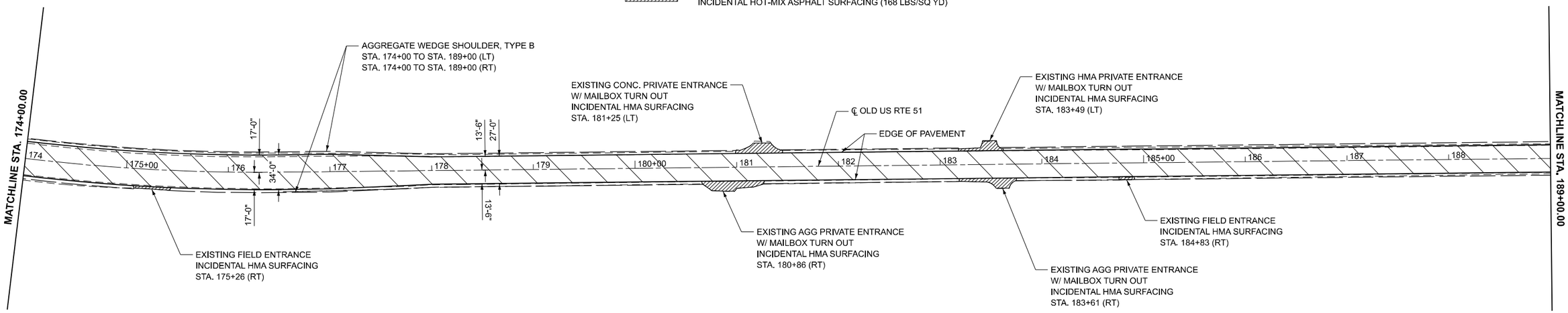

TOWNSHIP 22 NORTH, RANGE 2 EAST

TOWNSHIP 22 NORTH, RANGE 2 EAST

0 50 100 150
SCALE IN FEET

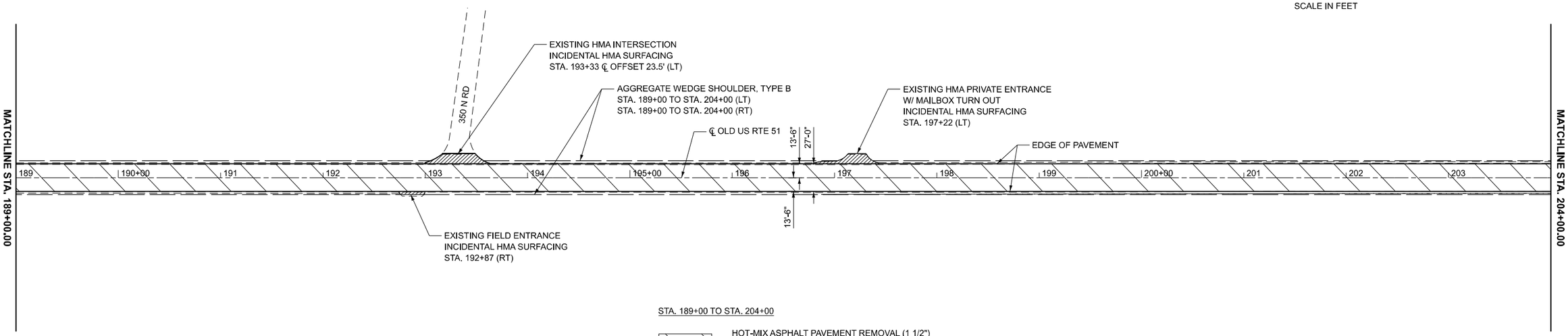

STA. 189+00 TO STA. 204+00

HOT-MIX ASPHALT PAVEMENT REMOVAL (1 1/2")
POLYMERIZED HOT-MIX ASPHALT SURFACE COURSE, IL-9.5, MIX "C" N70, (168 LBS/SQYD)

HOT-MIX ASPHALT SURFACE REMOVAL (SPECIAL)
INCIDENTAL HOT-MIX ASPHALT SURFACING (168 LBS/SQ YD)

MODEL: Border
FILE NAME: S:\PROJECTS\2023\1371D23_IDOT05\WO 1 Contract 70G11\DESIGN_70G11\CAD_Sheets\WHAID570G11_Border.dgn

WILLETT HOFMANN & ASSOCIATES INC
PROFESSIONAL DESIGN FIRM 184.000919
801 EAST DIVISION ST., DIXON, IL 61021-0587
T 815 284 3381 DESIGNFIRM@184.000919

USER NAME = afull	DESIGNED - AMF	REVISED -	
	DRAWN - TJA	REVISED -	
PLOT SCALE = 0.16666633 ' / in.	CHECKED - GFS	REVISED -	
PLOT DATE = 3/5/2024	DATE -	REVISED -	

STATE OF ILLINOIS
DEPARTMENT OF TRANSPORTATION

PROPOSED ROADWAY PLANS
OLD US RTE 51

SCALE: 1"=50' | SHEET 5 OF 14 SHEETS | STA. 174+00.00 TO STA. 204+00.00

F.A. RTE.	SECTION	COUNTY	TOTAL SHEETS	SHEET NO.
*	(55/56)RS-5,57-1(1)RS-1	MCLEAN	85	30

CONTRACT NO. 70G11

ILLINOIS | FED. AID PROJECT

STA. 204+00 TO STA. 219+00

HOT-MIX ASPHALT PAVEMENT REMOVAL (1 1/2")
POLYMERIZED HOT-MIX ASPHALT SURFACE COURSE, IL-9.5, MIX "C" N70, (168 LBS/SQYD)

HOT-MIX ASPHALT SURFACE REMOVAL (SPECIAL)
INCIDENTAL HOT-MIX ASPHALT SURFACING (168 LBS/SQ YD)

0 50 100 150
SCALE IN FEET

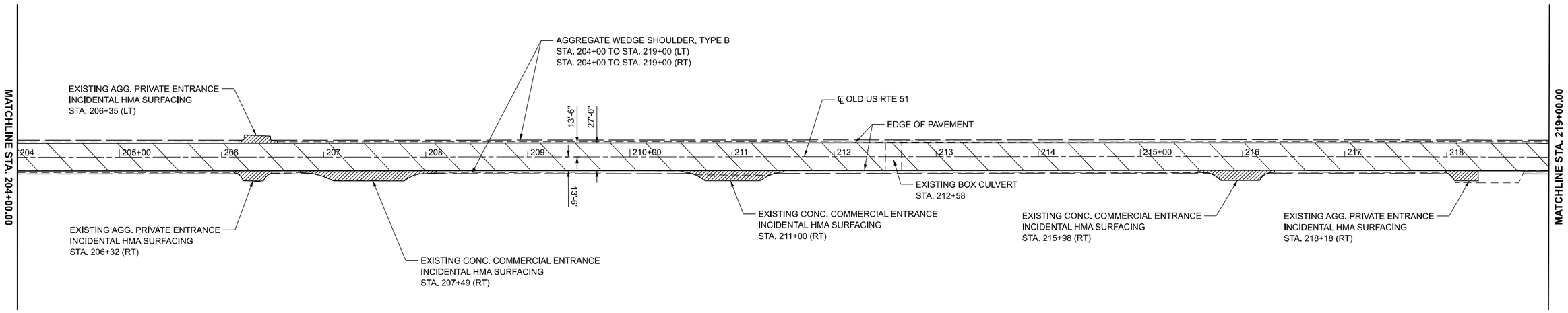

TOWNSHIP 22 NORTHER, RANGE 2 EAST

TOWNSHIP 22 NORTHER, RANGE 2 EAST

0 50 100 150
SCALE IN FEET

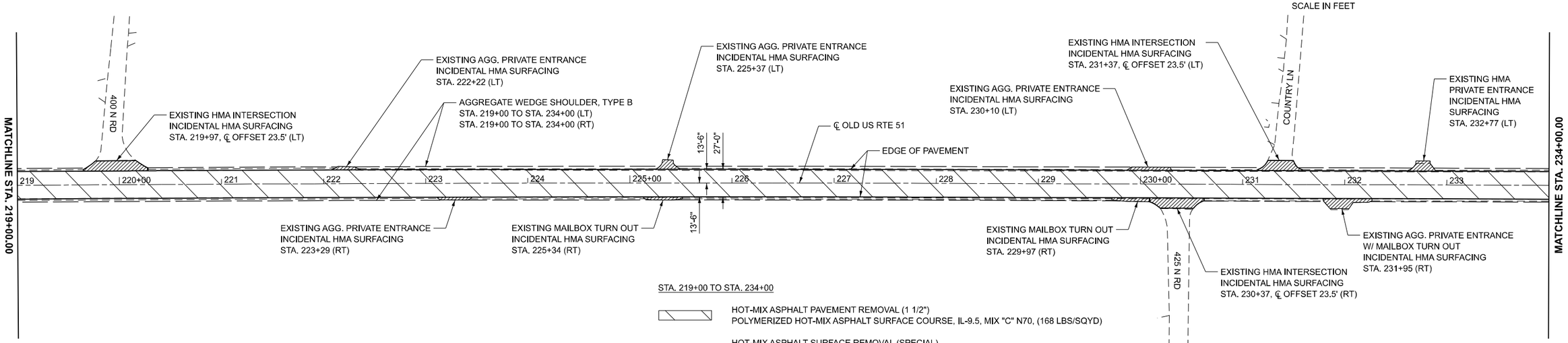

STA. 219+00 TO STA. 234+00

HOT-MIX ASPHALT PAVEMENT REMOVAL (1 1/2")
POLYMERIZED HOT-MIX ASPHALT SURFACE COURSE, IL-9.5, MIX "C" N70, (168 LBS/SQYD)

HOT-MIX ASPHALT SURFACE REMOVAL (SPECIAL)
INCIDENTAL HOT-MIX ASPHALT SURFACING (168 LBS/SQ YD)

MODEL: Border
FILE NAME: S:\PROJECTS\2023\1371D23_IDOTD5\WO 1 Contract 70G11\DESIGN_70G11\CAD Sheets\WHA\D570G11_Border.dgn

WILLETT HOFMANN & ASSOCIATES, INC.
PROFESSIONAL ENGINEERS AND LAND SURVEYORS
809 EAST 2ND STREET, DIXON, IL 61021-0367
T: 815 284 3381 FAX: CONTRIBUTE T: 815 980 9919

USER NAME = afull	DESIGNED - AMF	REVISED -	
	DRAWN - TJA	REVISED -	
PLOT SCALE = 0.16666633 ' / in.	CHECKED - GFS	REVISED -	
PLOT DATE = 3/5/2024	DATE -	REVISED -	

STATE OF ILLINOIS
DEPARTMENT OF TRANSPORTATION

PROPOSED ROADWAY PLANS
OLD US RTE 51

SCALE: 1"=50' | SHEET 6 OF 14 SHEETS | STA. 204+00.00 TO STA. 234+00.00

F.A. RTE.	SECTION	COUNTY	TOTAL SHEETS	SHEET NO.
*	(55/56)RS-5,57-1(1)RS-1	MCLEAN	85	31
		CONTRACT NO. 70G11		
	ILLINOIS	FED. AID PROJECT		

STA. 234+00 TO STA. 249+00

TOWNSHIP 22 NORTH, RANGE 2 EAST

HOT-MIX ASPHALT PAVEMENT REMOVAL (1 1/2")
POLYMERIZED HOT-MIX ASPHALT SURFACE COURSE, IL-9.5, MIX "C" N70, (168 LBS/SQYD)

HOT-MIX ASPHALT SURFACE REMOVAL (SPECIAL)
INCIDENTAL HOT-MIX ASPHALT SURFACING (168 LBS/SQ YD)

HOT-MIX ASPHALT SURFACE REMOVAL (1 1/2")
HOT-MIX ASPHALT SHOULDERS (168 LBS/SQ YD)

N

0 50 100 150
SCALE IN FEET

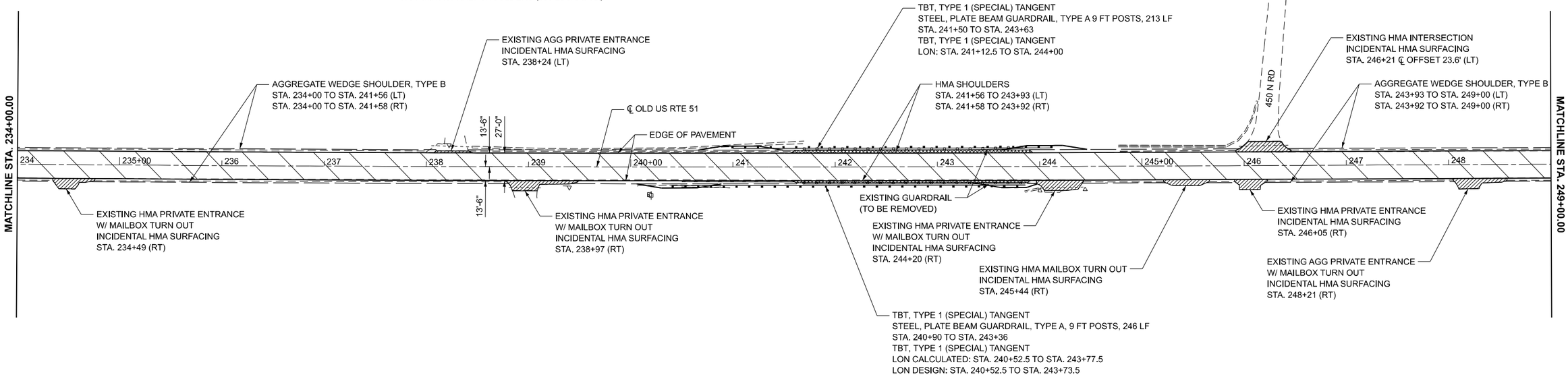

STA. 249+00 TO STA. 264+00

TOWNSHIP 22 NORTH, RANGE 2 EAST

HOT-MIX ASPHALT PAVEMENT REMOVAL (1 1/2")
POLYMERIZED HOT-MIX ASPHALT SURFACE COURSE, IL-9.5, MIX "C" N70, (168 LBS/SQYD)

HOT-MIX ASPHALT SURFACE REMOVAL (SPECIAL)
INCIDENTAL HOT-MIX ASPHALT SURFACING (168 LBS/SQ YD)

HOT-MIX ASPHALT SURFACE REMOVAL (1 1/2")
HOT-MIX ASPHALT SHOULDERS (168 LBS/SQ YD)

N

0 50 100 150
SCALE IN FEET

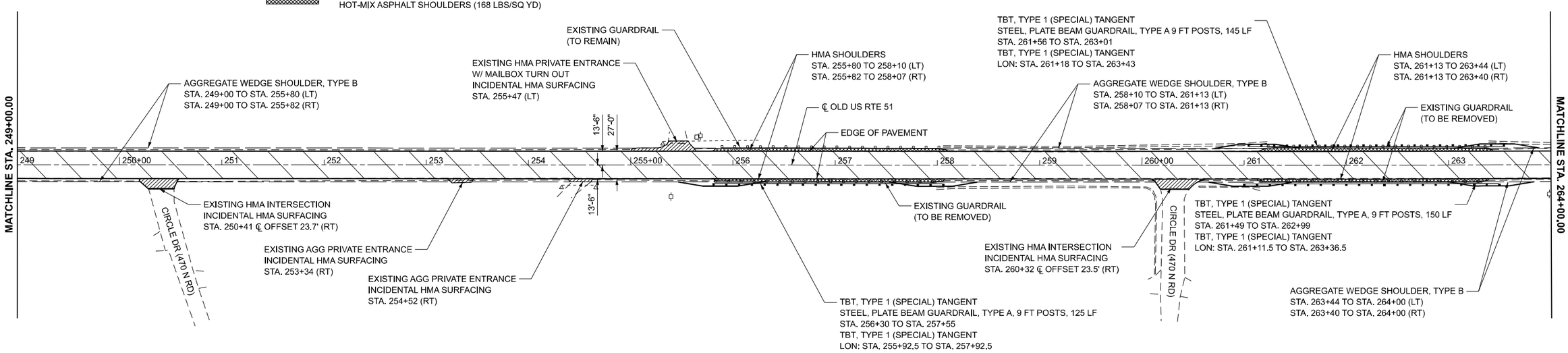

MODEL: Border
FILE NAME: S:\PROJECTS\2023\1371D23_IDOT\DS\WO 1 Contract 70G11\DESIGN_70G11\CAD Sheets\WHAIDS70G11_Border.dgn

WILLETT HOFMANN & ASSOCIATES INC
ARCHITECTURE · ENGINEERING · PLANNING
801 EAST 2ND STREET, DIXON, IL 61021-0367
T: 815 284 3381 DESIGN FIRM #: 184 000918

USER NAME = afull	DESIGNED - AMF	REVISED -	
	DRAWN - TJA	REVISED -	
PLOT SCALE = 0.16666633 ' / in.	CHECKED - GFS	REVISED -	
PLOT DATE = 3/5/2024	DATE -	REVISED -	

STATE OF ILLINOIS
DEPARTMENT OF TRANSPORTATION

PROPOSED ROADWAY PLANS
OLD US RTE 51

SCALE: 1"=50' | SHEET 7 OF 14 SHEETS | STA. 234+00.00 TO STA. 264+00.00

F.A. RTE.	SECTION	COUNTY	TOTAL SHEETS	SHEET NO.
*	(55/56)RS-5,57-1(1)RS-1	MCLEAN	85	32
		CONTRACT NO. 70G11		
	ILLINOIS	FED. AID PROJECT		

STA. 264+00 TO STA. 279+00

HOT-MIX ASPHALT PAVEMENT REMOVAL (1 1/2")
POLYMERIZED HOT-MIX ASPHALT SURFACE COURSE, IL-9.5, MIX "C" N70, (168 LBS/SQYD)

HOT-MIX ASPHALT SURFACE REMOVAL (SPECIAL)
INCIDENTAL HOT-MIX ASPHALT SURFACING (168 LBS/SQ YD)

HOT-MIX ASPHALT SURFACE REMOVAL (1 1/2")
HOT-MIX ASPHALT SHOULDERS (168 LBS/SQ YD)

0 50 100 150
SCALE IN FEET

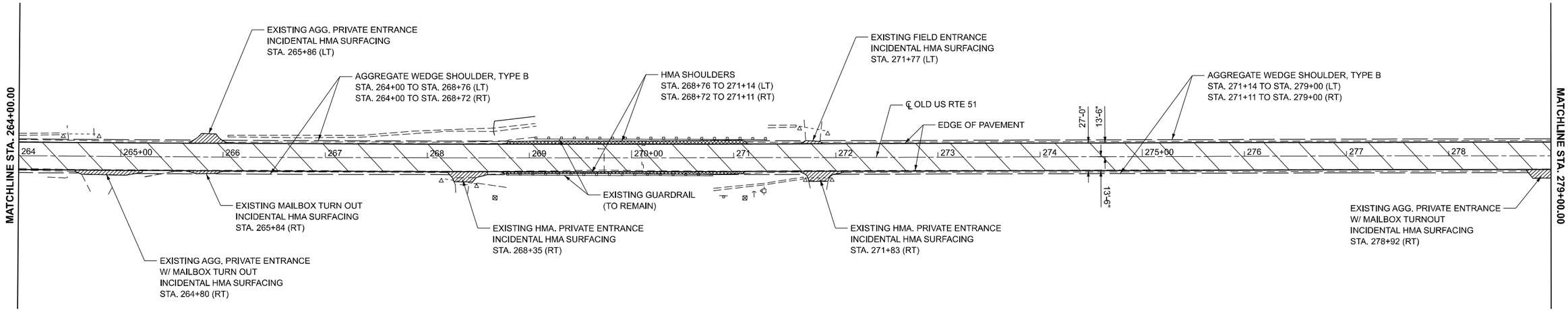

TOWNSHIP 22 NORTH, RANGE 2 EAST

STA. 279+00 TO STA. 294+00

TOWNSHIP 22 NORTH, RANGE 2 EAST

HOT-MIX ASPHALT PAVEMENT REMOVAL (1 1/2")
POLYMERIZED HOT-MIX ASPHALT SURFACE COURSE, IL-9.5, MIX "C" N70, (168 LBS/SQYD)

HOT-MIX ASPHALT SURFACE REMOVAL (SPECIAL)
INCIDENTAL HOT-MIX ASPHALT SURFACING (168 LBS/SQ YD)

HOT-MIX ASPHALT SURFACE REMOVAL (1 1/2")
HOT-MIX ASPHALT SHOULDERS (168 LBS/SQ YD)

0 50 100 150
SCALE IN FEET

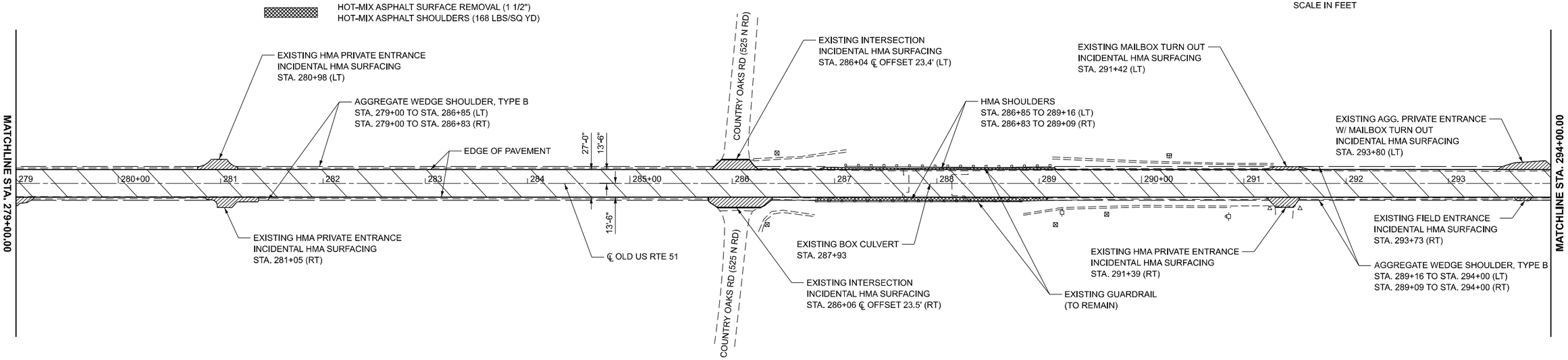

MODEL: Border
FILE NAME: S:\PROJECTS\2023\1371D23_IDOT\DS\WO 1 Contract 70G11\DESIGN_70G11\CAD Sheets\WHAID570G11_Border.dgn

WILLETT HOFMANN & ASSOCIATES INC
ARCHITECTURE ENGINEERING LAND SURVEYING
807 EAST ZWICK STREET, DIXON, IL 61021-0397
T: 815 284 3381 DESIGNFIRM #: 184 000918

USER NAME = afull	DESIGNED - AMF	REVISED -	
	DRAWN - TJA	REVISED -	
PLOT SCALE = 0.16666633 ' / in.	CHECKED - GFS	REVISED -	
PLOT DATE = 3/5/2024	DATE -	REVISED -	

STATE OF ILLINOIS
DEPARTMENT OF TRANSPORTATION

PROPOSED ROADWAY PLANS
OLD US RTE 51

SCALE: 1"=50' | SHEET 8 OF 14 SHEETS | STA. 264+00.00 TO STA. 294+00.00

F.A. RTE.	SECTION	COUNTY	TOTAL SHEETS	SHEET NO.
*	(55/56)RS-5,57-1(1)RS-1	MCLEAN	85	33
		CONTRACT NO. 70G11		
	ILLINOIS	FED. AID PROJECT		

STA. 294+00 TO STA. 309+00

HOT-MIX ASPHALT PAVEMENT REMOVAL (1 1/2")
POLYMERIZED HOT-MIX ASPHALT SURFACE COURSE, IL-9.5, MIX "C" N70, (168 LBS/SQYD)

HOT-MIX ASPHALT SURFACE REMOVAL (SPECIAL)
INCIDENTAL HOT-MIX ASPHALT SURFACING (168 LBS/SQ YD)

HOT-MIX ASPHALT SURFACE REMOVAL (1 1/2")
HOT-MIX ASPHALT SHOULDERS (168 LBS/SQ YD)

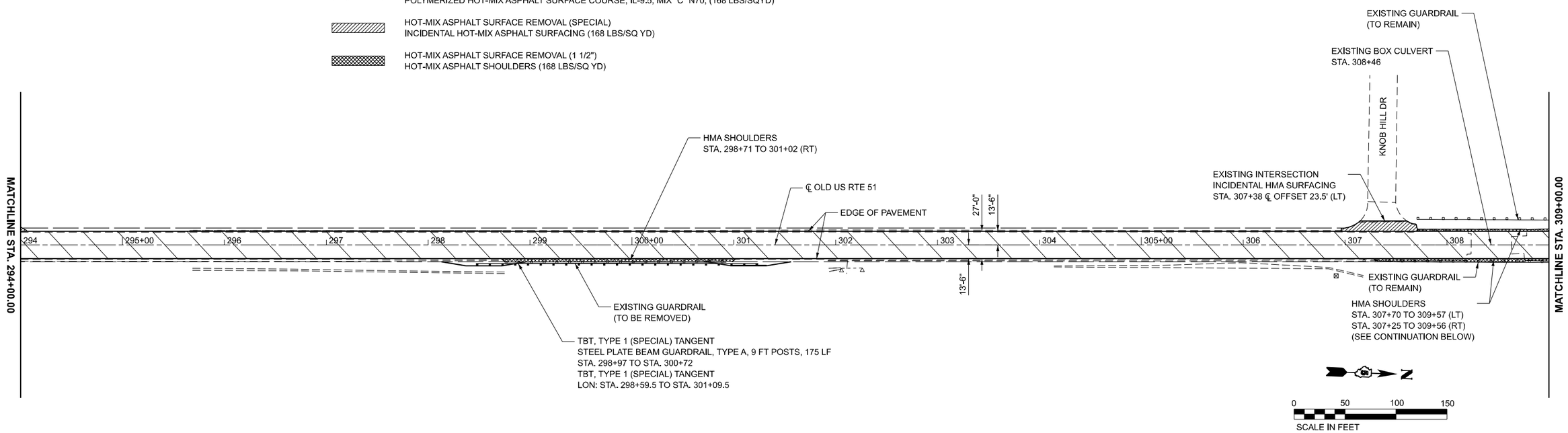

TOWNSHIP 22 NORTH, RANGE 2 EAST

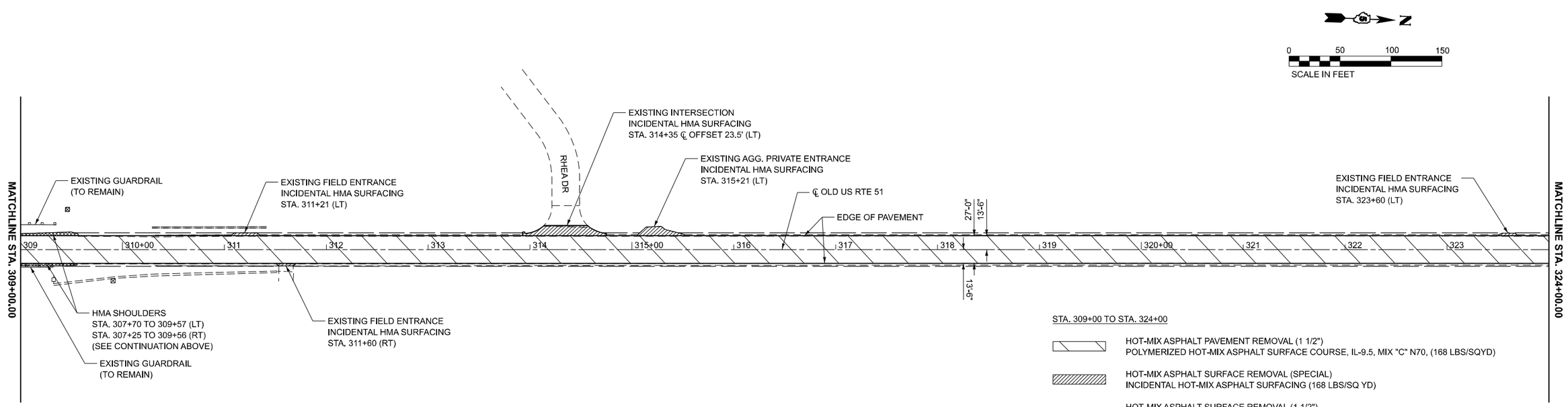

STA. 309+00 TO STA. 324+00

HOT-MIX ASPHALT PAVEMENT REMOVAL (1 1/2")
POLYMERIZED HOT-MIX ASPHALT SURFACE COURSE, IL-9.5, MIX "C" N70, (168 LBS/SQYD)

HOT-MIX ASPHALT SURFACE REMOVAL (SPECIAL)
INCIDENTAL HOT-MIX ASPHALT SURFACING (168 LBS/SQ YD)

HOT-MIX ASPHALT SURFACE REMOVAL (1 1/2")
HOT-MIX ASPHALT SHOULDERS (168 LBS/SQ YD)

TOWNSHIP 22 NORTH, RANGE 2 EAST

MODEL: Border
FILE NAME: S:\PROJECTS\2023\1371D23_IDOT\DS\WO 1 Contract 70G11\DESIGN_70G11\CAD_Sheets\WHA\D570G11_Border.dgn

WILLETT HOFMANN & ASSOCIATES, INC.
PROFESSIONAL ENGINEERS CONSULTING
809 EAST 2ND STREET, DIXON, IL 61021-0367
T: 815-284-3381 FAX: 815-284-3000

USER NAME = afull	DESIGNED - AMF	REVISED -	
	DRAWN - TJA	REVISED -	
PLOT SCALE = 0.16666633 ' / in.	CHECKED - GFS	REVISED -	
PLOT DATE = 3/5/2024	DATE -	REVISED -	

STATE OF ILLINOIS
DEPARTMENT OF TRANSPORTATION

PROPOSED ROADWAY PLANS
OLD US RTE 51

SCALE: 1"=50' | SHEET 9 OF 14 SHEETS | STA. 294+00.00 TO STA. 324+00.00

F.A. RTE.	SECTION	COUNTY	TOTAL SHEETS	SHEET NO.
*	(55/56)RS-5,57-1(1)RS-1	MCLEAN	85	34
		CONTRACT NO. 70G11		
	ILLINOIS	FED. AID PROJECT		

STA. 324+00 TO STA. 339+00

HOT-MIX ASPHALT PAVEMENT REMOVAL (1 1/2")
POLYMERIZED HOT-MIX ASPHALT SURFACE COURSE, IL-9.5, MIX "C" N70, (168 LBS/SQYD)

HOT-MIX ASPHALT SURFACE REMOVAL (SPECIAL)
INCIDENTAL HOT-MIX ASPHALT SURFACING (168 LBS/SQ YD)

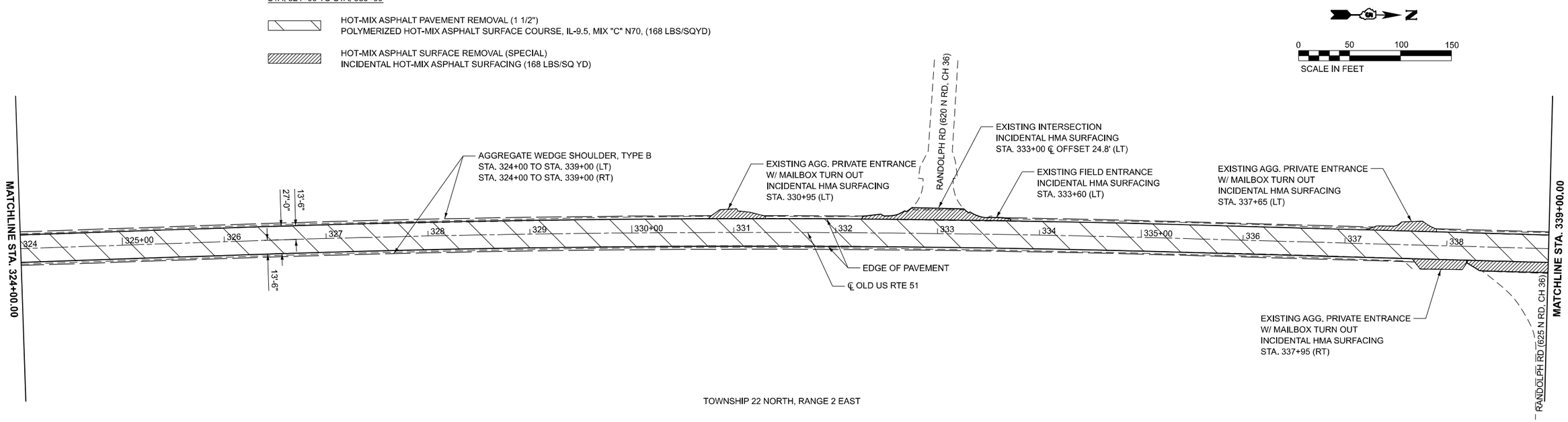

TOWNSHIP 22 NORTH, RANGE 2 EAST

STA. 339+00 TO STA. 354+00

HOT-MIX ASPHALT PAVEMENT REMOVAL (1 1/2")
POLYMERIZED HOT-MIX ASPHALT SURFACE COURSE, IL-9.5, MIX "C" N70, (168 LBS/SQYD)

HOT-MIX ASPHALT SURFACE REMOVAL (SPECIAL)
INCIDENTAL HOT-MIX ASPHALT SURFACING (168 LBS/SQ YD)

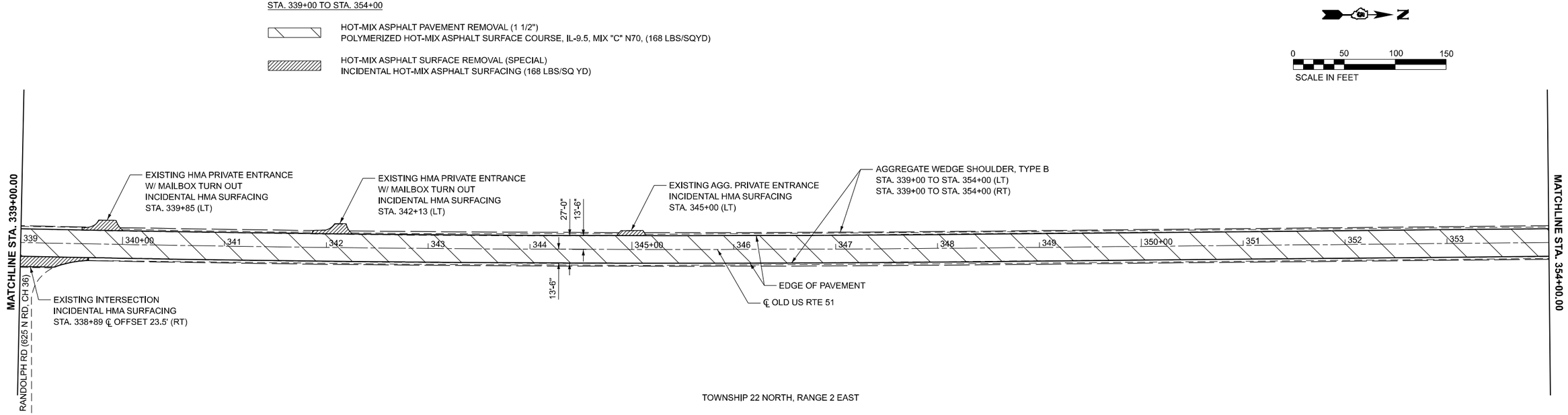

TOWNSHIP 22 NORTH, RANGE 2 EAST

MODEL: Border
FILE NAME: S:\PROJECTS\2023\1371D23_IDOT\D5\WO 1 Contract 70G11\DESIGN_70G11\CAD_Sheets\WHA\D570G11_Border.dgn

WILLETT HOFMANN & ASSOCIATES, INC.
PROFESSIONAL ENGINEERS, LAND SURVEYORS
809 EAST 2ND STREET, DIXON, IL 61021-0367
T: 815 284-3381 FAX: (24/7 DIRECT) 815 284-3000

USER NAME = afull	DESIGNED - AMF	REVISED -	
	DRAWN - TJA	REVISED -	
PLOT SCALE = 0.16666633 ' / in.	CHECKED - GFS	REVISED -	
PLOT DATE = 3/5/2024	DATE -	REVISED -	

STATE OF ILLINOIS
DEPARTMENT OF TRANSPORTATION

PROPOSED ROADWAY PLANS
OLD US RTE 51

SCALE: 1"=50' | SHEET 10 OF 14 SHEETS | STA. 324+00.00 TO STA. 354+00.00

F.A. RTE.	SECTION	COUNTY	TOTAL SHEETS	SHEET NO.
*	(55/56)RS-5,57-1(1)RS-1	MCLEAN	85	35
		CONTRACT NO. 70G11		
	ILLINOIS	FED. AID PROJECT		

STA. 354+00 TO STA. 369+00

HOT-MIX ASPHALT PAVEMENT REMOVAL (1 1/2")
POLYMERIZED HOT-MIX ASPHALT SURFACE COURSE, IL-9.5, MIX "C" N70, (168 LBS/SQYD)

HOT-MIX ASPHALT SURFACE REMOVAL (SPECIAL)
INCIDENTAL HOT-MIX ASPHALT SURFACING (168 LBS/SQ YD)

0 50 100 150
SCALE IN FEET

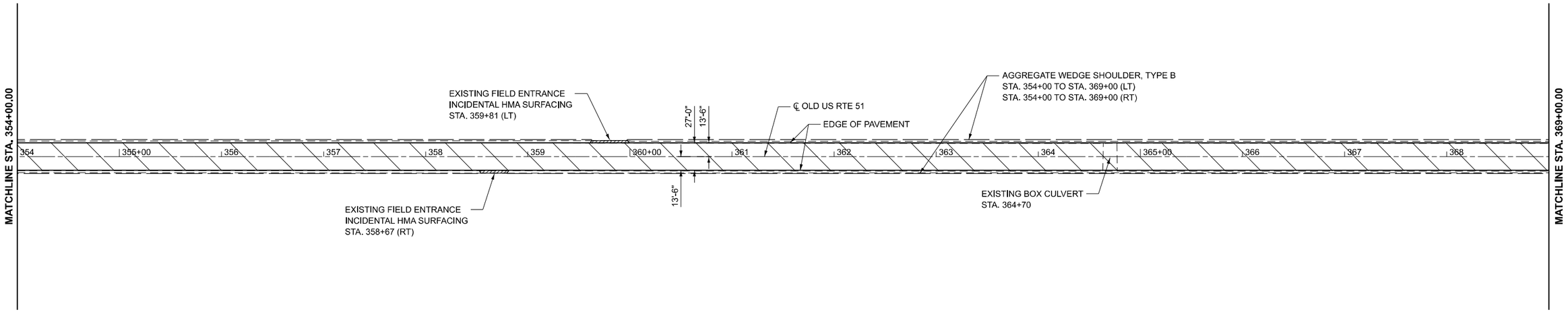

TOWNSHIP 22 NORTH, RANGE 2 EAST

STA. 369+00 TO STA. 384+00

HOT-MIX ASPHALT PAVEMENT REMOVAL (1 1/2")
POLYMERIZED HOT-MIX ASPHALT SURFACE COURSE, IL-9.5, MIX "C" N70, (168 LBS/SQYD)

HOT-MIX ASPHALT SURFACE REMOVAL (SPECIAL)
INCIDENTAL HOT-MIX ASPHALT SURFACING (168 LBS/SQ YD)

0 50 100 150
SCALE IN FEET

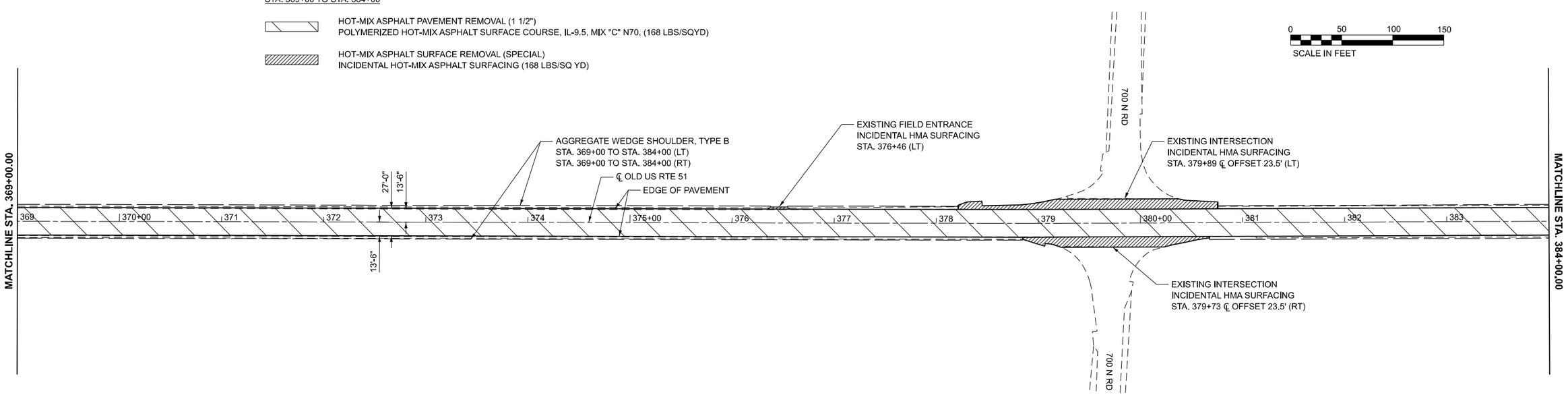

TOWNSHIP 22 NORTH, RANGE 2 EAST

MODEL: Border
FILE NAME: S:\PROJECTS\2023\1371D23_IDOT D5\WO 1 Contract 70G11\DESIGN_70G11\CAD_Sheets\WHA\D570G11_Border.dgn

WILLETT HOFMANN & ASSOCIATES, INC.
PROFESSIONAL ENGINEERS AND LAND SURVEYORS
809 EAST 200 STREET, DANVILLE, ILLINOIS 61832-5667
T: 217-446-0500 FAX: 217-446-0501

USER NAME = afull	DESIGNED - AMF	REVISED -	
	DRAWN - TJA	REVISED -	
PLOT SCALE = 0.16666633 ' / in.	CHECKED - GFS	REVISED -	
PLOT DATE = 3/5/2024	DATE -	REVISED -	

STATE OF ILLINOIS
DEPARTMENT OF TRANSPORTATION

PROPOSED ROADWAY PLANS
OLD US RTE 51

SCALE: 1"=50' | SHEET 11 OF 14 SHEETS | STA. 354+00.00 TO STA. 384+00.00

F.A. RTE.	SECTION	COUNTY	TOTAL SHEETS	SHEET NO.
*	(55/56)RS-5,57-1(1)RS-1	MCLEAN	85	36
		CONTRACT NO. 70G11		
	ILLINOIS	FED. AID PROJECT		

STA. 384+00 TO STA. 399+00

HOT-MIX ASPHALT PAVEMENT REMOVAL (1 1/2")
POLYMERIZED HOT-MIX ASPHALT SURFACE COURSE, IL-9.5, MIX "C" N70, (168 LBS/SQYD)

HOT-MIX ASPHALT SURFACE REMOVAL (SPECIAL)
INCIDENTAL HOT-MIX ASPHALT SURFACING (168 LBS/SQ YD)

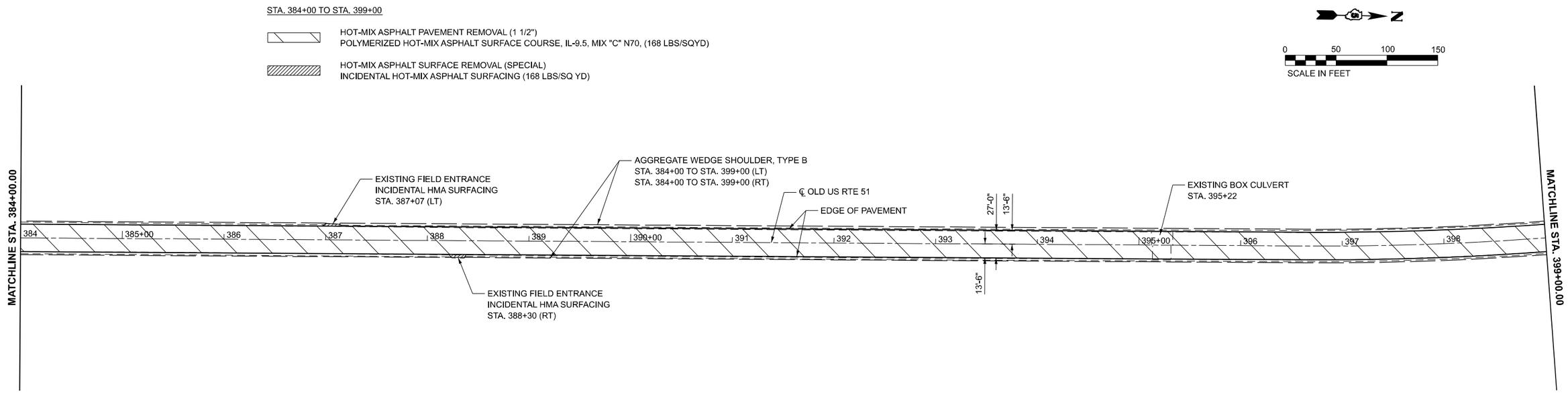

TOWNSHIP 22 NORTH, RANGE 2 EAST

STA. 399+00 TO STA. 414+00

HOT-MIX ASPHALT PAVEMENT REMOVAL (1 1/2")
POLYMERIZED HOT-MIX ASPHALT SURFACE COURSE, IL-9.5, MIX "C" N70, (168 LBS/SQYD)

HOT-MIX ASPHALT SURFACE REMOVAL (SPECIAL)
INCIDENTAL HOT-MIX ASPHALT SURFACING (168 LBS/SQ YD)

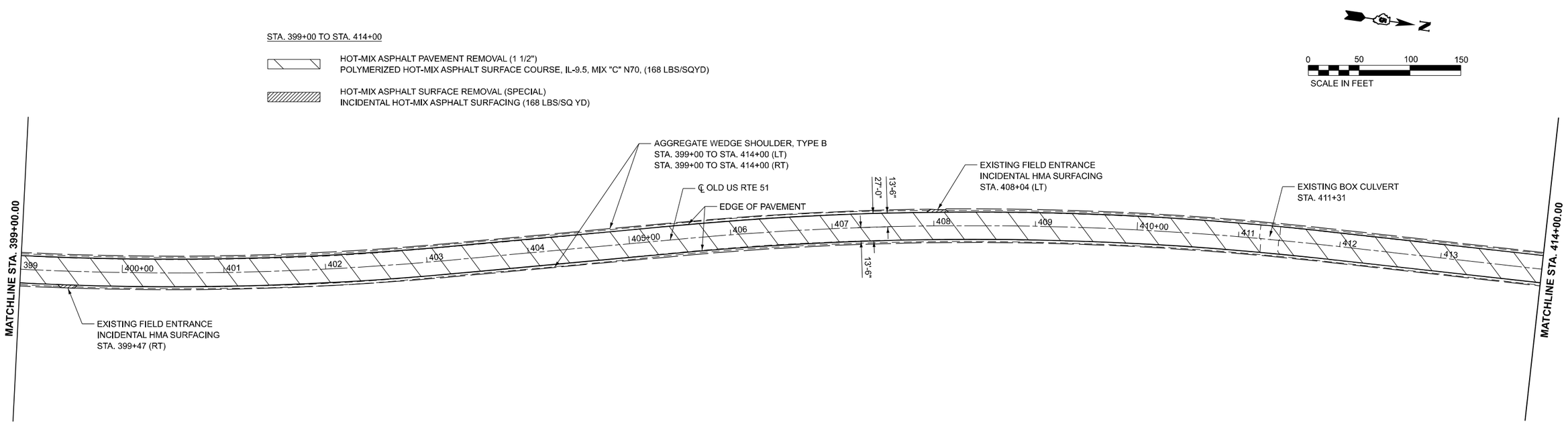

TOWNSHIP 22 NORTH, RANGE 2 EAST

MODEL: Border
FILE NAME: S:\PROJECTS\2023\1371D23_IDOT\D5\WO 1 Contract 70G11\DESIGN_70G11\CAD_Sheets\WHA\D570G11_Border.dgn

WILLETT HOFMANN & ASSOCIATES, INC.
PROFESSIONAL ENGINEERS, LAND SURVEYORS
809 EAST 2ND STREET, DIXON, IL 61021-0367
T: 815 284-3381 DESIGN@WHA-E.COM 815 284-3383

USER NAME = afull	DESIGNED - AMF	REVISED -	
	DRAWN - TJA	REVISED -	
PLOT SCALE = 0.16666633 ' / in.	CHECKED - GFS	REVISED -	
PLOT DATE = 3/5/2024	DATE -	REVISED -	

STATE OF ILLINOIS
DEPARTMENT OF TRANSPORTATION

PROPOSED ROADWAY PLANS
OLD US RTE 51

SCALE: 1"=50' | SHEET 12 OF 14 SHEETS | STA. 384+00.00 TO STA. 414+00.00

F.A. RTE.	SECTION	COUNTY	TOTAL SHEETS	SHEET NO.
*	(55/56)RS-5,57-1(1)RS-1	MCLEAN	85	37
		CONTRACT NO. 70G11		
	ILLINOIS	FED. AID PROJECT		

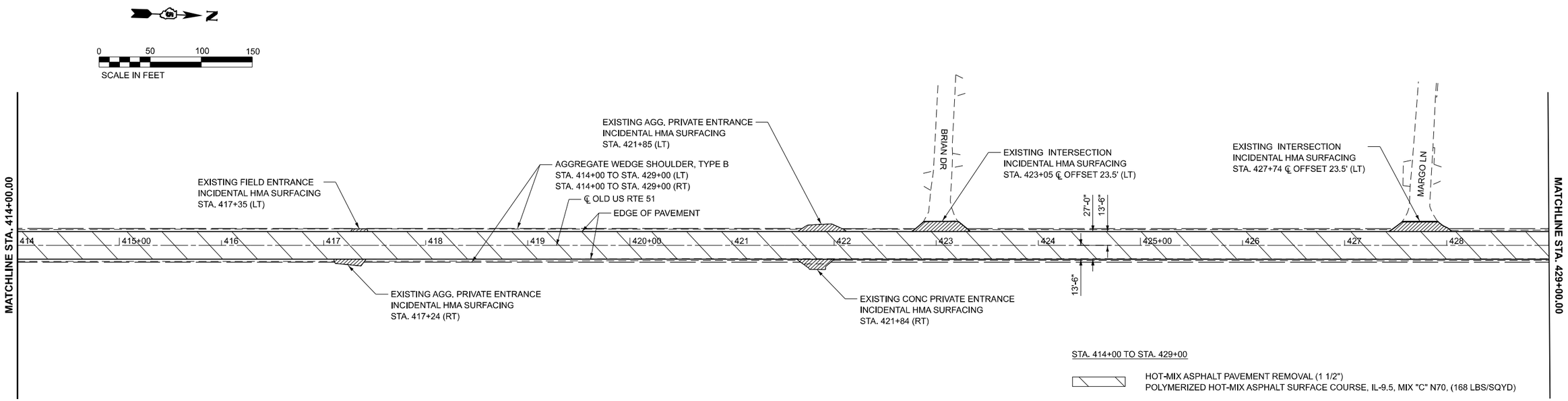

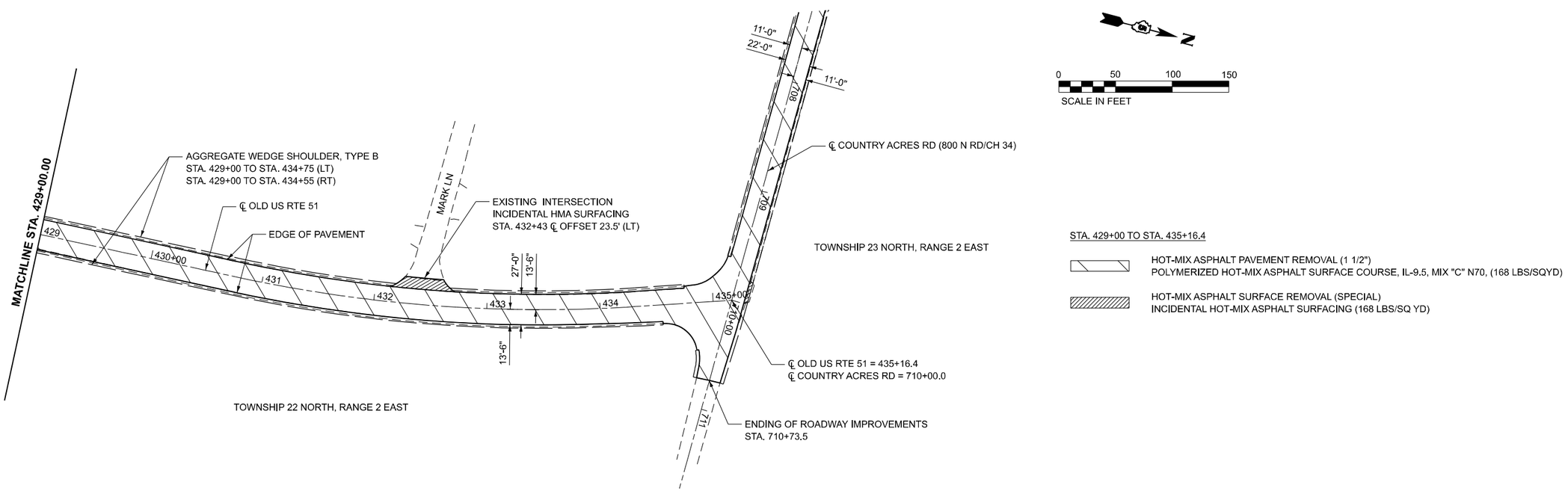

MODEL: Border
FILE NAME: S:\PROJECTS\2023\1371D23_IDOT D5\WO 1 Contract 70G11\DESIGN_70G11\CAD Sheets\WHA\D570G11_Border.dgn

WILLETT HOFMANN & ASSOCIATES, INC.
PROFESSIONAL ENGINEERS AND LAND SURVEYORS
809 EAST 2ND STREET, DIXON, IL 61021-0367
T: 815 284-3381 FAX: CONTRIBUTE T: 815 980-9918

USER NAME = afull	DESIGNED - AMF	REVISED -	
	DRAWN - TJA	REVISED -	
PLOT SCALE = 0.16666633 ' / in.	CHECKED - GFS	REVISED -	
PLOT DATE = 3/5/2024	DATE -	REVISED -	

STATE OF ILLINOIS
DEPARTMENT OF TRANSPORTATION

PROPOSED ROADWAY PLANS
OLD US RTE 51

SCALE: 1"=50' | SHEET 13 OF 14 SHEETS | STA. 414+00.00 TO STA. 435+16.41

F.A. RTE.	SECTION	COUNTY	TOTAL SHEETS	SHEET NO.
*	(55/56)RS-5,57-1(1)RS-1	MCLEAN	85	38
		CONTRACT NO. 70G11		
	ILLINOIS	FED. AID PROJECT		

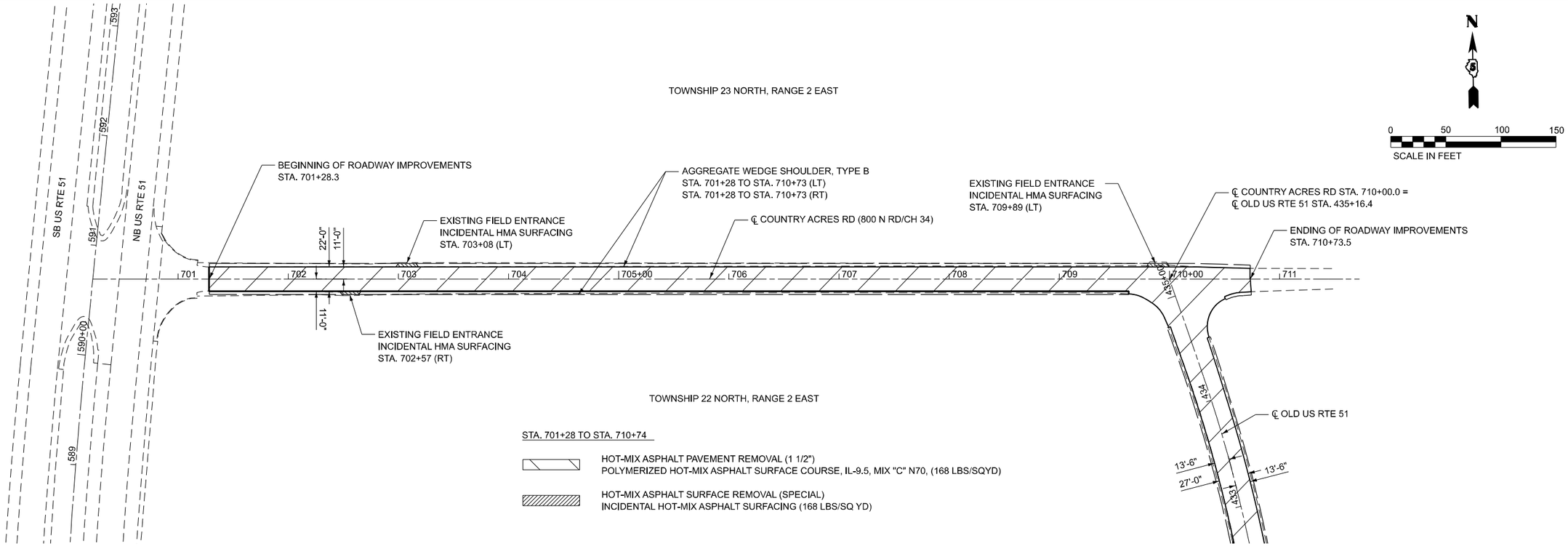

MODEL: Border
FILE NAME: S:\PROJECTS\2023\1371D23_IDOTD5\WO 1 Contract 70G11\DESIGN_70G11\CAD_Sheets\WHAID570G11_Border.dgn

WILLETT HOFMANN & ASSOCIATES, INC.
PROFESSIONAL ENGINEERS · LAND SURVEYORS
809 EAST 200 STREET, DANVILLE, ILLINOIS 61832-5367
T: 217-446-3081 DESIGN FIRM: 184-000918

USER NAME = afull	DESIGNED - AMF	REVISED -	
	DRAWN - TJA	REVISED -	
PLOT SCALE = 0.16666633 ' / in.	CHECKED - GFS	REVISED -	
PLOT DATE = 3/5/2024	DATE -	REVISED -	

STATE OF ILLINOIS
DEPARTMENT OF TRANSPORTATION

PROPOSED ROADWAY PLANS
E. 800 NORTH ROAD

SCALE: 1"=50' | SHEET 14 OF 14 SHEETS | STA. 701+28.30 TO STA. 710+73.47

F.A. RTE.	SECTION	COUNTY	TOTAL SHEETS	SHEET NO.
*	(55/56)RS-5,57-1(1)RS-1	MCLEAN	85	39
		CONTRACT NO. 70G11		
	ILLINOIS	FED. AID PROJECT		

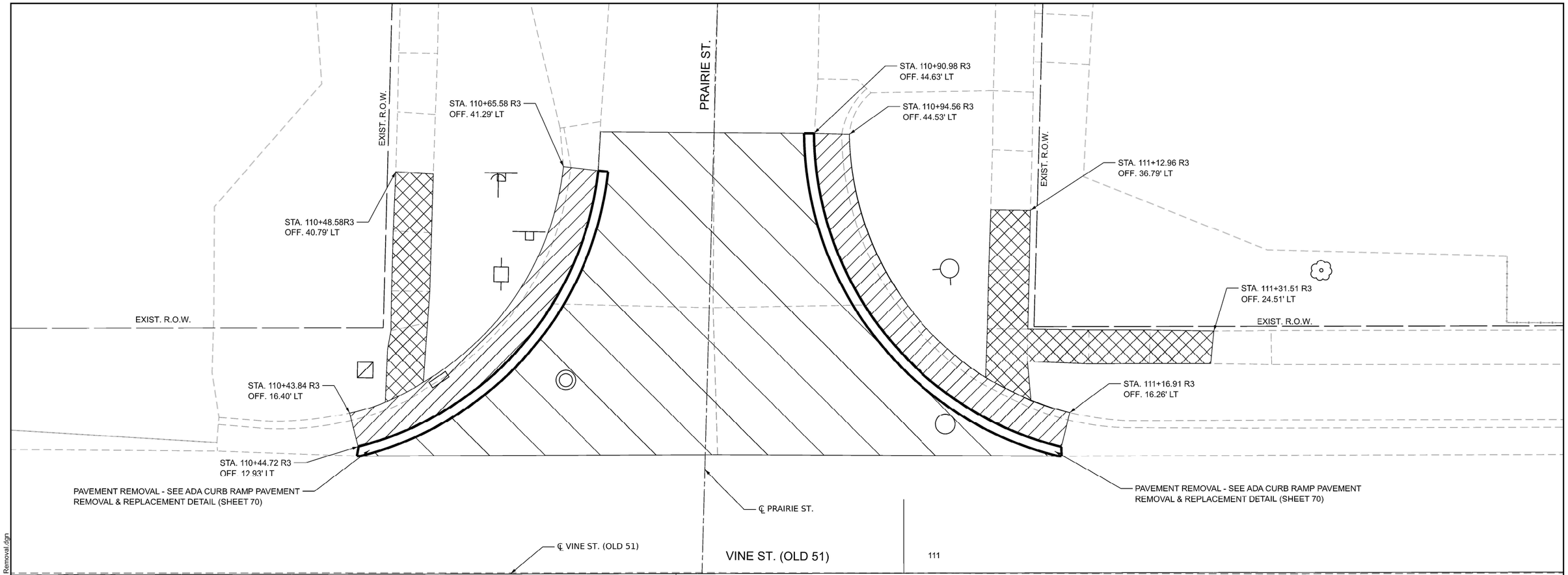

LEGEND:

HOT-MIX ASPHALT SURFACE REMOVAL (SPECIAL)

SIDEWALK REMOVAL

COMBINATION CURB AND GUTTER REMOVAL

N

0 5 10 15

SCALE IN FEET

MODEL: Prairie West Removal [Sheet]
FILE NAME: F:\Projects\30 IDOT\50.155A.23_PTB_207_040_Heyworth ADA (Sub to Willett Hoffman)\Workfile\Sheets\D570G11-sht-ADA Paire West Removal.dgn

HERMANN & Associates, LLC
Civil Engineers

USER NAME = justin	DESIGNED - CRM	REVISED -	
	DRAWN - AMH	REVISED -	
PLOT SCALE = 0.16666633 ' / in.	CHECKED - JSW	REVISED -	
PLOT DATE = 3/18/2024	DATE -	REVISED -	

STATE OF ILLINOIS
DEPARTMENT OF TRANSPORTATION

REMOVAL PLAN - PRAIRIE WEST
OLD US 51 / VINE ST.

SCALE: 1"=5' | SHEET OF 14 SHEETS | STA. TO STA.

F.A. RTE.	SECTION	COUNTY	TOTAL SHEETS	SHEET NO.
*	(55/56)RS-5,57-1(1)RS-1	MCLEAN	85	40
		CONTRACT NO. 70G11		
		ILLINOIS	FED. AID PROJECT	

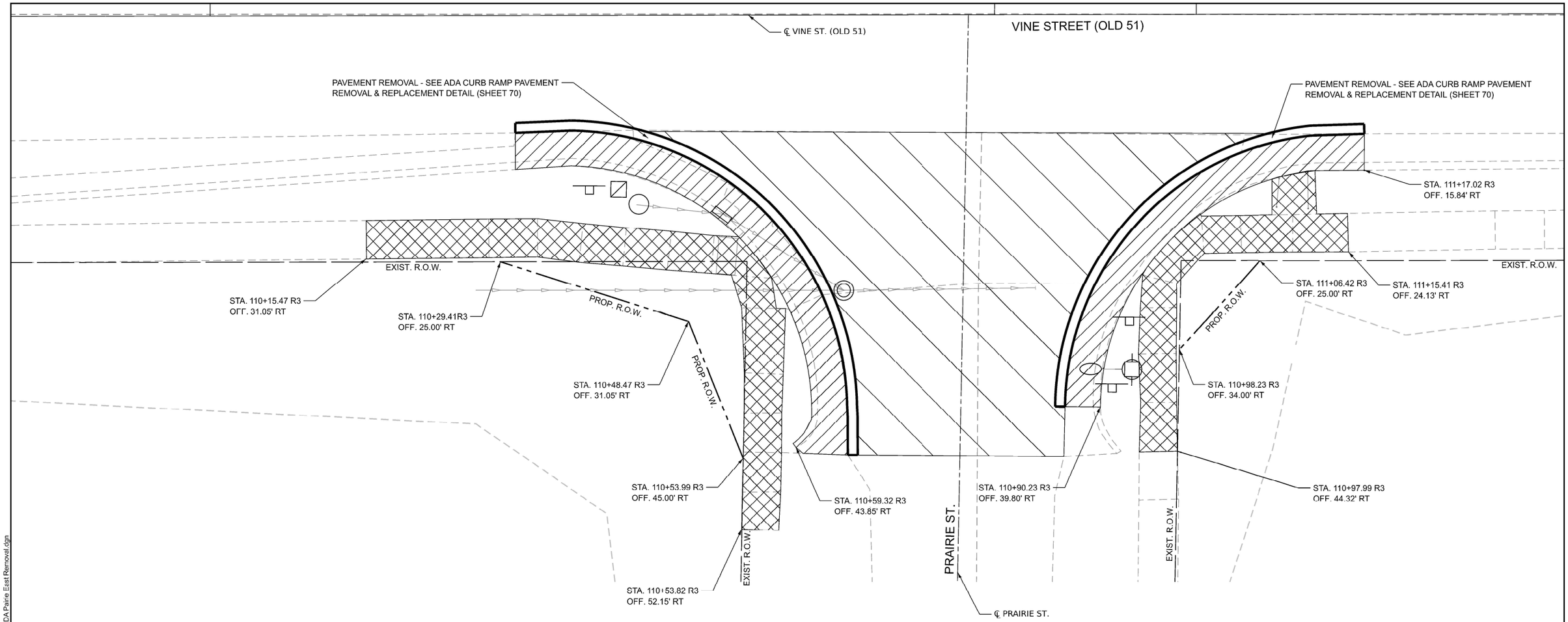

LEGEND:

HOT-MIX ASPHALT SURFACE REMOVAL (SPECIAL)

SIDEWALK REMOVAL

COMBINATION CURB AND GUTTER REMOVAL

0 5 10 15
SCALE IN FEET

MODEL: Prairie East Removal [Sheet]
FILE NAME: F:\Projects\30 IDOT\50.155A.23_PTB_207_040 -Heyworth ADA (Sub to Willett Hoffman)\Workfile\Sheets\D570G11-sht-ADA Paire East Removal.dgn

HERMANN & Associates, LLC
Civil Engineers

USER NAME = justin	DESIGNED - CRM	REVISED -	
	DRAWN - AMH	REVISED -	
PLOT SCALE = 0.16666633 ' / in.	CHECKED - JSW	REVISED -	
PLOT DATE = 3/18/2024	DATE -	REVISED -	

STATE OF ILLINOIS
DEPARTMENT OF TRANSPORTATION

REMOVAL PLAN - PRAIRIE EAST
OLD US 51 / VINE ST.

SCALE: 1"=5' | SHEET OF 14 SHEETS | STA. TO STA.

F.A. RTE.	SECTION	COUNTY	TOTAL SHEETS	SHEET NO.
*	(55/56)RS-5,57-1(1)RS-1	MCLEAN	85	41
		CONTRACT NO. 70G11		
	ILLINOIS	FED. AID PROJECT		

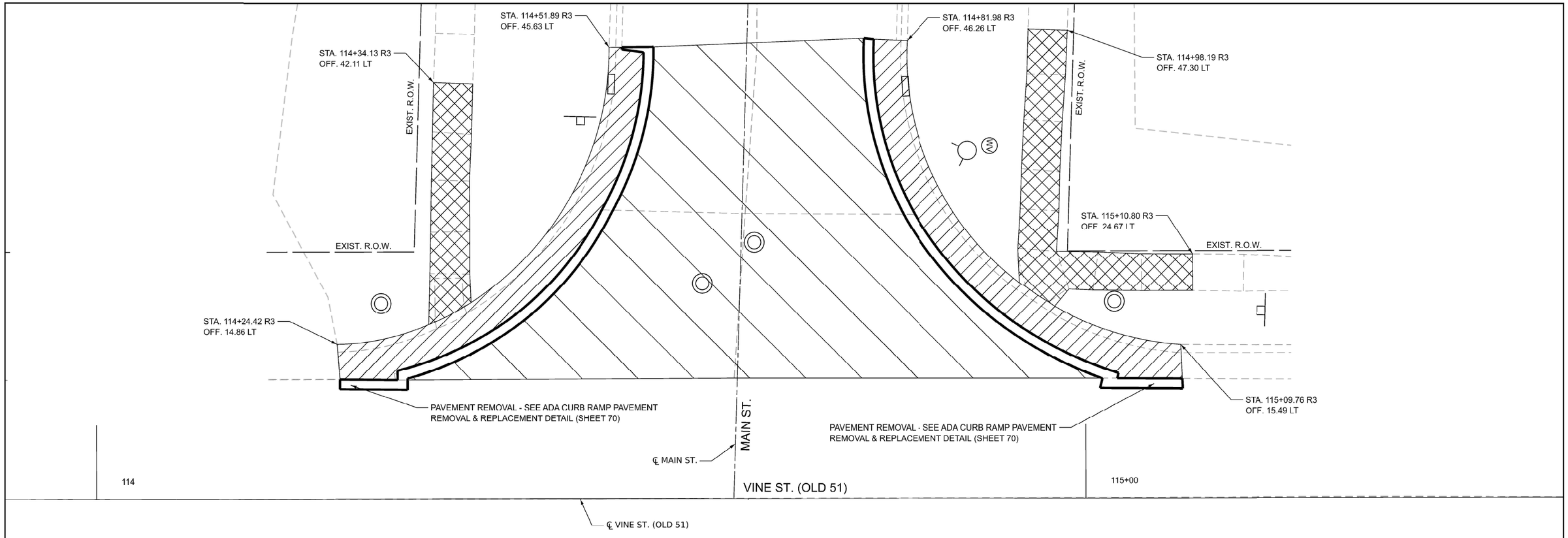

LEGEND:

HOT-MIX ASPHALT SURFACE REMOVAL (SPECIAL)

SIDEWALK REMOVAL

COMBINATION CURB AND GUTTER REMOVAL

0 5 10 15
SCALE IN FEET

MODEL: Main West Removal [Sheet]
FILE NAME: F:\Projects\30 IDOT\50_155A_23_PTB_207_040_-keyworth ADA (Sub to Villlett Hoffman)\Workfile\Sheets\D570G11-sht-ADA Main West Removal.dgn

HERMANN & Associates, LLC
Civil Engineers

USER NAME = jusliri	DESIGNED - CRM	REVISED -	
	DRAWN - AMH	REVISED -	
PLOT SCALE = 0.16666633 ' / in.	CHECKED - JSW	REVISED -	
PLOT DATE = 3/18/2024	DATE -	REVISED -	

STATE OF ILLINOIS
DEPARTMENT OF TRANSPORTATION

REMOVAL PLAN - MAIN WEST
OLD US 51 / VINE ST.

SCALE: 1"=5' | SHEET OF 14 SHEETS | STA. TO STA.

F.A. RTE.	SECTION	COUNTY	TOTAL SHEETS	SHEET NO.
*	(55/56)RS-5,57-1(1)RS-1	MCLEAN	85	42
		CONTRACT NO. 70G11		
	ILLINOIS	FED. AID PROJECT		

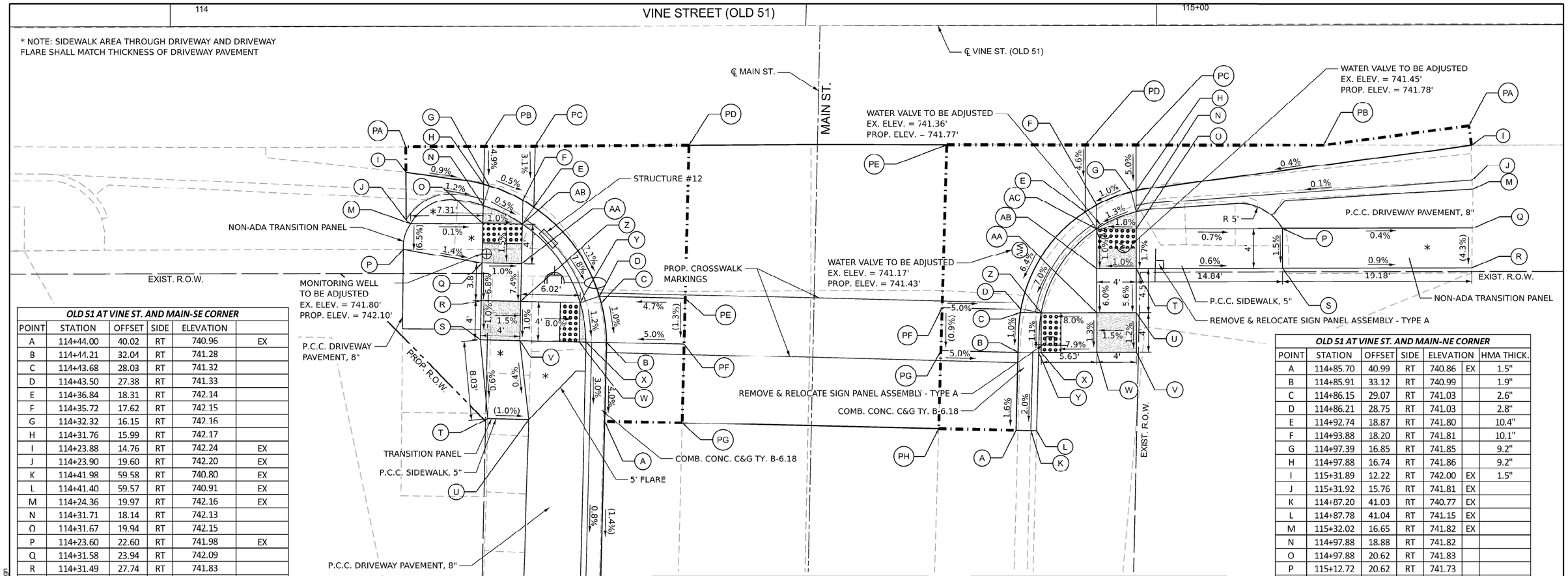

OLD 51 AT VINE ST. AND MAIN-SE CORNER					
POINT	STATION	OFFSET	SIDE	ELEVATION	
A	114+44.00	40.02	RT	740.96	EX
B	114+44.21	32.04	RT	741.28	
C	114+43.68	28.03	RT	741.32	
D	114+43.50	27.38	RT	741.33	
E	114+36.84	18.31	RT	742.14	
F	114+35.72	17.62	RT	742.15	
G	114+32.32	16.15	RT	742.16	
H	114+31.76	15.99	RT	742.17	
I	114+23.88	14.76	RT	742.24	EX
J	114+23.90	19.60	RT	742.20	EX
K	114+41.98	59.58	RT	740.80	EX
L	114+41.40	59.57	RT	740.91	EX
M	114+24.36	19.97	RT	742.16	EX
N	114+31.71	18.14	RT	742.13	
O	114+31.67	19.94	RT	742.15	
P	114+23.60	22.60	RT	741.98	EX
Q	114+31.58	23.94	RT	742.09	
R	114+31.49	27.74	RT	741.83	
S	114+31.39	31.74	RT	741.79	
T	114+32.14	39.74	RT	741.74	EX
U	114+36.28	39.84	RT	741.70	EX
V	114+35.39	31.83	RT	741.73	
W	114+41.41	31.98	RT	741.25	
X	114+42.12	31.99	RT	741.24	
Y	114+41.50	27.98	RT	741.29	
Z	114+35.49	27.84	RT	741.77	
AA	114+35.57	24.03	RT	742.05	
AB	114+35.67	20.03	RT	742.11	
AC	114+35.63	59.83	RT	741.56	EX
AD	114+43.48	59.62	RT	740.80	EX

OLD 51 AT VINE ST. AND MAIN-SE CORNER PAVEMENT						
POINT	STATION	OFFSET	SIDE	ELEVATION		HMA THICK.
PA	114+23.87	12.17	RT	742.40	EX	1.5"
PB	114+31.85	12.14	RT	742.36	EX	1.5"
PC	114+36.98	12.12	RT	742.33	EX	1.5"
PD	114+52.58	12.07	RT	742.24	EX	1.5"
PE	114+52.17	27.58	RT	741.74	EX	1.5"
PF	114+52.05	32.22	RT	741.68	EX	1.5"
PG	114+51.84	40.20	RT	741.57	EX	1.5"

OLD 51 AT VINE ST. AND MAIN-NE CORNER PAVEMENT						
POINT	STATION	OFFSET	SIDE	ELEVATION		HMA THICK.
PA	115+31.63	10.24	RT	742.01	EX	1.5"
PB	115+16.88	12.18	RT	742.04	EX	1.5"
PC	114+97.88	12.12	RT	742.09	EX	1.5"
PD	114+97.74	12.11	RT	742.10	EX	1.5"
PE	114+78.74	12.07	RT	742.13	EX	1.5"
PF	114+78.24	28.55	RT	741.43	EX	1.5"
PG	114+78.11	32.93	RT	741.39	EX	1.5"
PH	114+77.87	40.81	RT	741.31	EX	1.5"

OLD 51 AT VINE ST. AND MAIN-NE CORNER						
POINT	STATION	OFFSET	SIDE	ELEVATION		HMA THICK.
A	114+85.70	40.99	RT	740.86	EX	1.5"
B	114+85.91	33.12	RT	740.99		1.9"
C	114+86.15	29.07	RT	741.03		2.6"
D	114+86.21	28.75	RT	741.03		2.8"
E	114+92.74	18.87	RT	741.80		10.4"
F	114+93.88	18.20	RT	741.81		10.1"
G	114+97.39	16.85	RT	741.85		9.2"
H	114+97.88	16.74	RT	741.86		9.2"
I	115+31.89	12.22	RT	742.00	EX	1.5"
J	115+31.92	15.76	RT	741.81	EX	
K	114+87.20	41.03	RT	740.77	EX	
L	114+87.78	41.04	RT	741.15	EX	
M	115+32.02	16.65	RT	741.82	EX	
N	114+97.88	18.88	RT	741.82		
O	114+97.88	20.62	RT	741.83		
P	115+12.72	20.62	RT	741.73		
Q	115+31.96	20.62	RT	741.66	EX	
R	115+31.90	24.62	RT	741.49	EX	
S	115+12.72	24.62	RT	741.67		
T	114+97.88	24.62	RT	741.76		
U	114+97.88	29.12	RT	741.51		
V	114+97.88	33.12	RT	741.46		
W	114+93.88	33.12	RT	741.40		
X	114+88.25	33.12	RT	740.96		
Y	114+88.00	33.12	RT	740.96		
Z	114+88.25	29.12	RT	741.00		
AA	114+93.88	29.12	RT	741.45		
AB	114+93.88	24.62	RT	741.72		
AC	114+93.88	20.62	RT	741.76		

STRUCTURE #12
STA. 114+38.32, 21.52' RT
EXIST. INLET TO BE ADJUSTED
EXIST. RIM ELEV. = 741.08
PROP. RIM ELEV. = 741.83

0 5 10 15
SCALE IN FEET

GENERAL NOTES:

1. REFER TO ADA CURB RAMP PAVEMENT REMOVAL & REPLACEMENT DETAIL (SHEET 70).
2. CONTRACTOR SHALL VERIFY EXISTING FIELD CONDITIONS PRIOR TO THE CONSTRUCTION OF ANY RAMP OR SIDEWALK. ANY ADJUSTMENTS NECESSARY TO MEET EXISTING FIELD CONDITIONS SHALL BE APPROVED BY THE ENGINEER PRIOR TO CONSTRUCTION.
3. PROPOSED PAVEMENT MARKINGS ARE PROVIDED FOR INFORMATION ONLY. SEE PROPOSED PAVEMENT MARKING PLAN (SHEETS 55 AND 56).
4. FLOW LINE ELEVATION PERPENDICULAR TO CURB IS 0.04' LOWER THAN BACK OF CURB. SEE STANDARD 606001.
5. AT DEPRESSED CURBS ADJACENT TO CURB RAMPS ACCESSIBLE TO THE DISABLED, THE PERPENDICULAR GUTTER FLAG SLOPE SHALL BE -5.0% UNLESS NOTED OTHERWISE.
6. LIMITS OF VAR. DEPTH H.M.A. TO BE COORDINATED WITH ENGINEER TO ACHIEVE 5.0% MAX. CROSSWALK RUNNING SLOPE, 5.0% MAX. COUNTERSLOPE, AND 2.0% MAX CROSSWALK CROSS SLOPE.
7. TOOLED JOINTS NOT SHOWN. TOOLED JOINTS SHOULD BE CONSTRUCTED IN ACCORDANCE WITH SECTION 424 OF THE STANDARD SPECS AND AS DIRECTED BY THE ENGINEER.

LEGEND:

LIMITS OF VARYING H.M.A. THICKNESS (SEE CHART FOR THICKNESS - THICKNESS IS FROM TOP OF PROPOSED TO MILLED SURFACE)

DETECTABLE WARNINGS

PROPOSED TURNING SPACE

( ) EXISTING ELEVATION / SLOPE

DRAINAGE NOTES:

1. INLET RIM ELEVATION IS LOCATED AT GUTTER FLOWLINE.
2. TYPE 8 GRATE RIM ELEVATION IS LOCATED AT TOP OF GRATE.

MODEL: Main East ADA Detail [Sheet]
FILE NAME: F:\Projects\30 IDOT\50_155A23_PTB_207_049 -Heyworth ADA (Sub to Willet Hoffman)\Workfile\Sheets\D570G11-sht-ADA Main East.dgn

HERMANN & Associates, LLC
Civil Engineers

USER NAME = justin	DESIGNED - CRM	REVISED -	
	DRAWN - AMH	REVISED -	
PLOT SCALE = 0.16666633 ' / in.	CHECKED - JSW	REVISED -	
PLOT DATE = 5/2/2024	DATE -	REVISED -	

STATE OF ILLINOIS
DEPARTMENT OF TRANSPORTATION

ADA DETAIL - MAIN EAST
OLD US 51 / VINE ST.

SCALE: 1"=5' | SHEET OF 14 SHEETS | STA. TO STA.

F.A. RTE.	SECTION	COUNTY	TOTAL SHEETS	SHEET NO.
*	(55/56)RS-5,57-1(1)RS-1	MCLEAN	85	50

CONTRACT NO. 70G11

ILLINOIS | FED. AID PROJECT

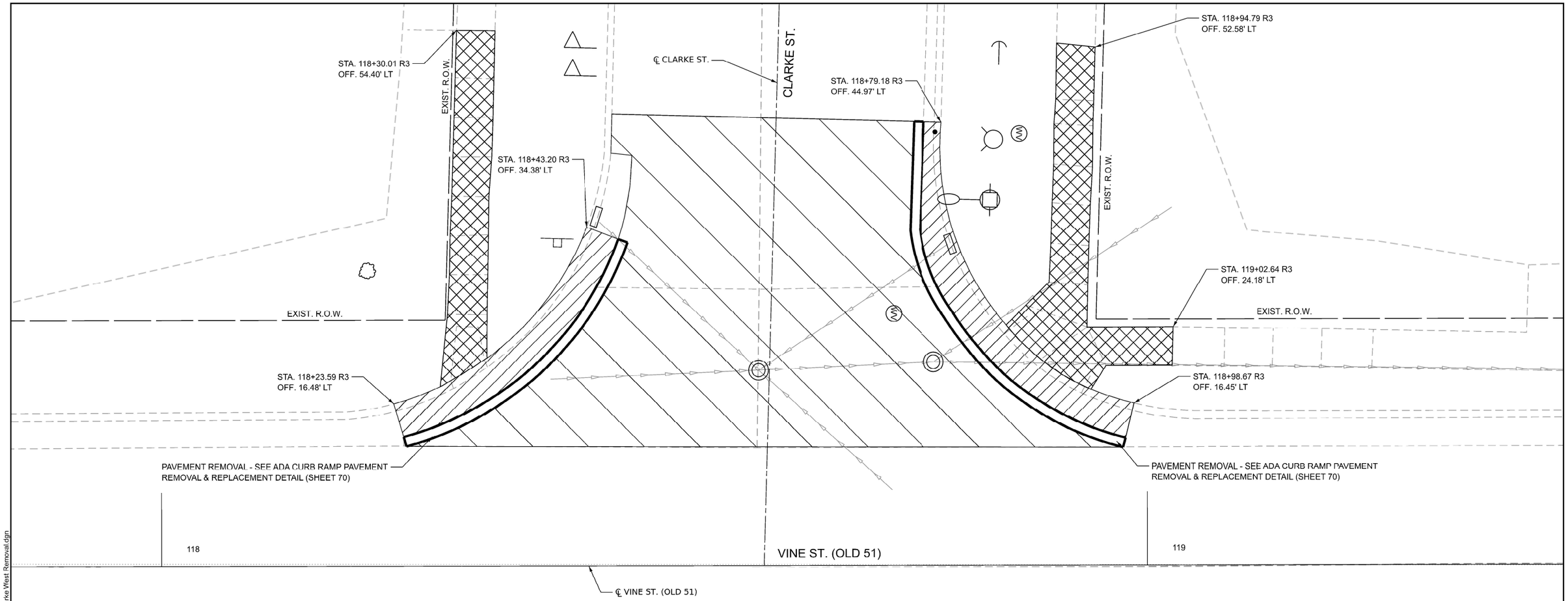

LEGEND:

HOT-MIX ASPHALT SURFACE REMOVAL (SPECIAL)

SIDEWALK REMOVAL

COMBINATION CURB AND GUTTER REMOVAL

0 5 10 15
SCALE IN FEET

MODEL: Clarke West Removal [Sheet]
FILE NAME: F:\Projects\50 IDOT\50.155A.23_PTB_207_040_Heyworth ADA (Sub to Villet Hoffman)\Workfile\Sheets\D570G11-sht-ADA Clarke West Removal.dgn

HERMANN & Associates, LLC
Civil Engineers

USER NAME = justin	DESIGNED - CRM	REVISED -	
	DRAWN - AMH	REVISED -	
PLOT SCALE = 0.16666633 ' / in.	CHECKED - JSW	REVISED -	
PLOT DATE = 3/18/2024	DATE -	REVISED -	

STATE OF ILLINOIS
DEPARTMENT OF TRANSPORTATION

REMOVAL PLAN - CLARKE WEST
OLD US 51 / VINE ST.

SCALE: 1"=5' | SHEET OF 14 SHEETS | STA. TO STA.

F.A. RTE.	SECTION	COUNTY	TOTAL SHEETS	SHEET NO.
*	(55/56)RS-5,57-1(1)RS-1	MCLEAN	85	44
		CONTRACT NO. 70G11		
	ILLINOIS	FED. AID PROJECT		

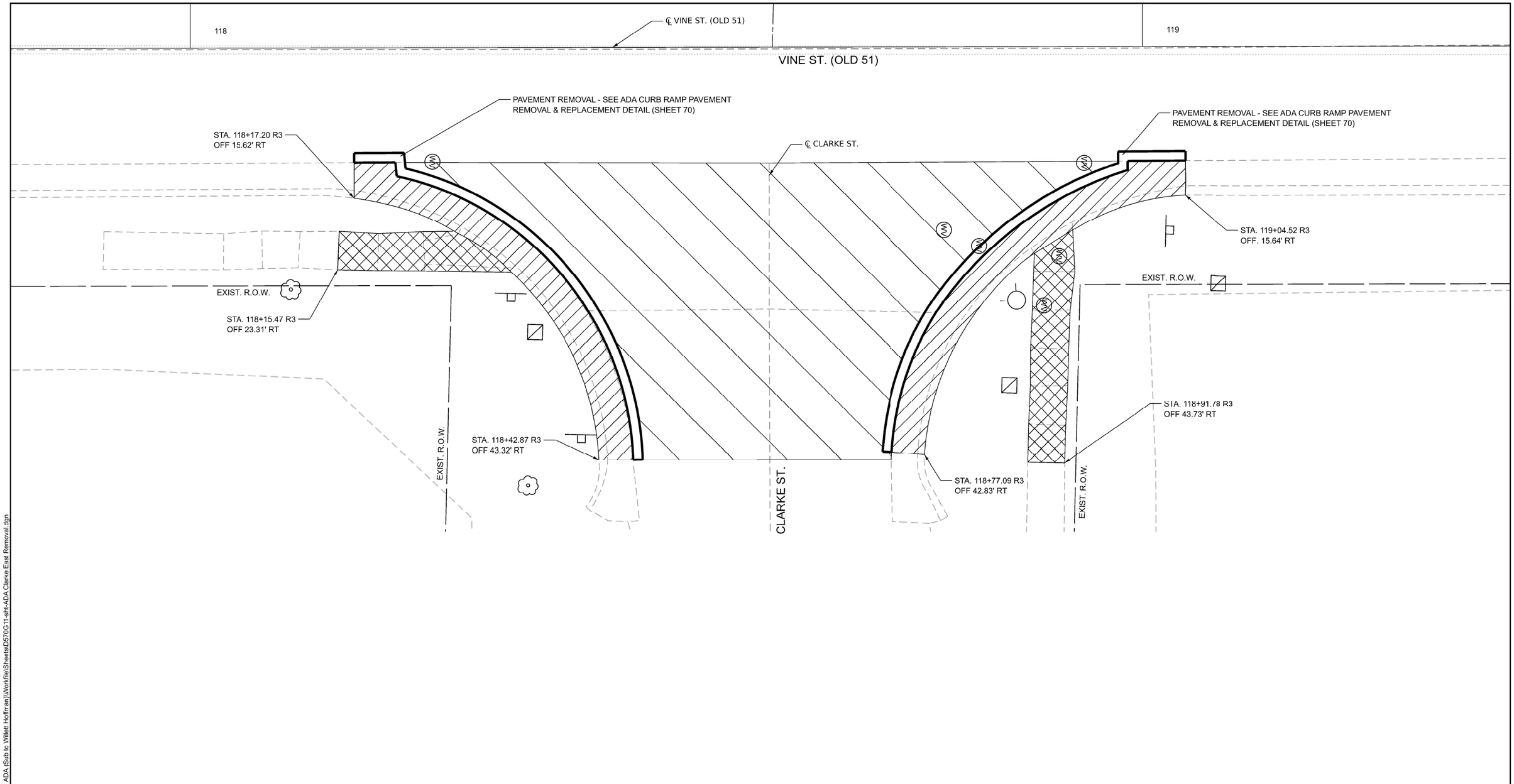

LEGEND:

HOT-MIX ASPHALT SURFACE REMOVAL (SPECIAL)

SIDEWALK REMOVAL

COMBINATION CURB AND GUTTER REMOVAL

N

0 5 10 15

SCALE IN FEET

MODEL: Clarke East Removal [Sheet]
FILE NAME: F:\Projects\30 IDOT\50.155A.23_PTB_207_040_-keyworth ADA (Sub to Villiet Hoffman)\Workfile\Sheets\D570G11-sht-ADA Clarke East Removal.dgn

HERMANN & Associates, LLC
Civil Engineers

USER NAME = jusliin	DESIGNED - CRM	REVISED -	
	DRAWN - AMH	REVISED -	
PLOT SCALE = 0.16666633 ' / in.	CHECKED - JSW	REVISED -	
PLOT DATE = 3/18/2024	DATE -	REVISED -	

STATE OF ILLINOIS
DEPARTMENT OF TRANSPORTATION

REMOVAL PLAN - CLARKE EAST
OLD US 51 / VINE ST.

SCALE: 1"=5' | SHEET OF 14 SHEETS | STA. TO STA.

F.A. RTE.	SECTION	COUNTY	TOTAL SHEETS	SHEET NO.
*	(55/56)RS-5,57-1(1)RS-1	MCLEAN	85	45

CONTRACT NO. 70G11

ILLINOIS | FED. AID PROJECT

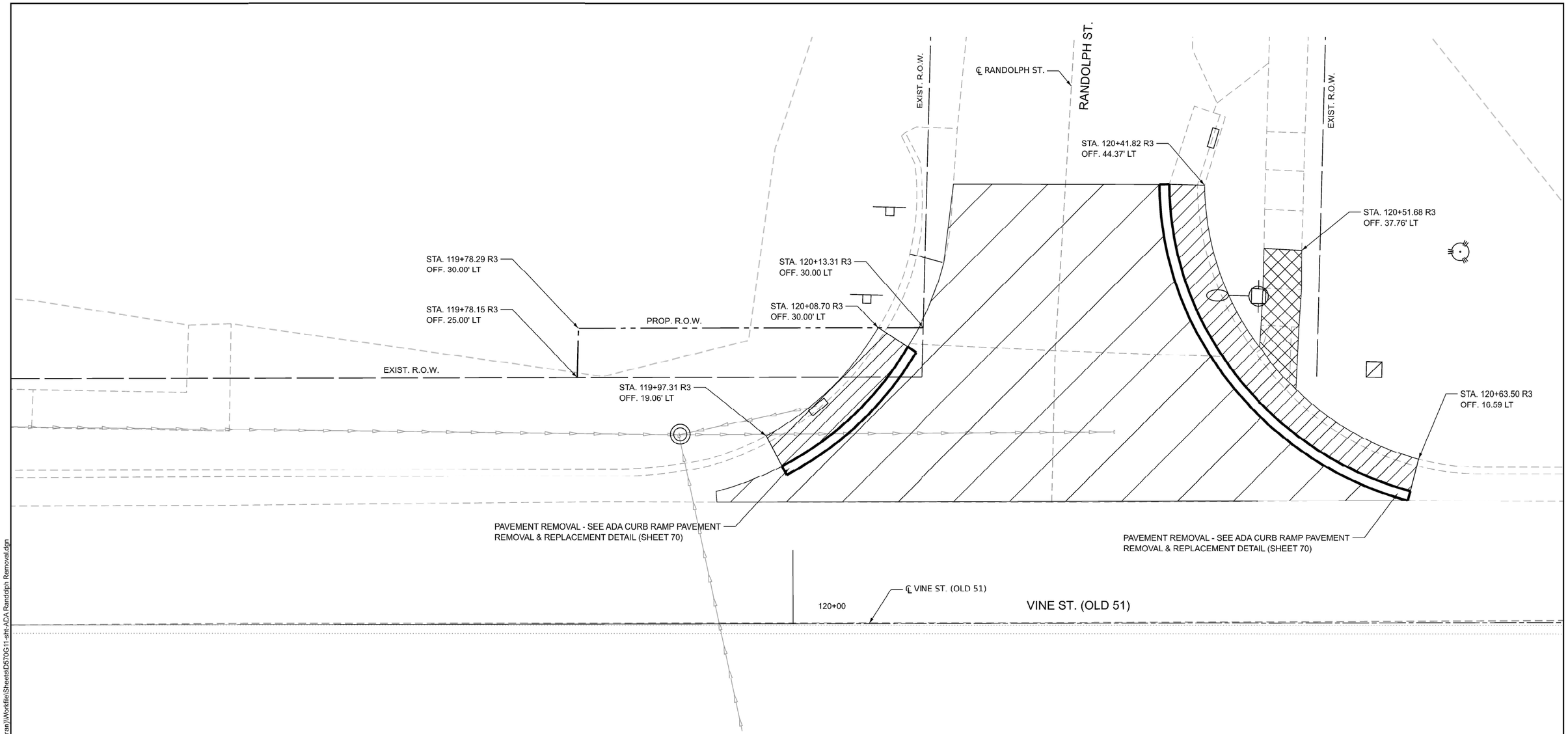

LEGEND:

HOT-MIX ASPHALT SURFACE REMOVAL (SPECIAL)

SIDEWALK REMOVAL

COMBINATION CURB AND GUTTER REMOVAL

N

0 5 10 15

SCALE IN FEET

MODEL: Randolph West Removal [Sheet]
FILE NAME: F:\Projects\30 IDOT\50.155A.23_PTB_207_040_Heyworth ADA (Sub to Willett Hoffman)\Workfile\Sheets\D570G11-sht-ADA Randdgn Removal.dgn

HERMANN & Associates, LLC
Civil Engineers

USER NAME = justin	DESIGNED - CRM	REVISED -	
	DRAWN - AMH	REVISED -	
PLOT SCALE = 0.16666633 ' / in.	CHECKED - JSW	REVISED -	
PLOT DATE = 3/18/2024	DATE -	REVISED -	

STATE OF ILLINOIS
DEPARTMENT OF TRANSPORTATION

REMOVAL PLAN - RANDOLPH WEST
OLD US 51 / VINE ST.

SCALE: 1"=5' | SHEET OF 14 SHEETS | STA. TO STA.

F.A. RTE.	SECTION	COUNTY	TOTAL SHEETS	SHEET NO.
*	(55/56)RS-5,57-1(1)RS-1	MCLEAN	85	46
		CONTRACT NO. 70G11		
	ILLINOIS	FED. AID PROJECT		

OLD 51 AT VINE ST. AND PRAIRIE-SW CORNER						
POINT	STATION	OFFSET	SIDE	ELEVATION		HMA THICK.
A	110+44.72	12.93	LT	748.38	EX	1.5"
B	110+46.81	13.54	LT	748.31		2.1"
C	110+48.44	14.11	LT	748.29		3.4"
D	110+50.97	15.21	LT	748.26		5.0"
E	110+53.14	16.37	LT	748.24		6.0"
F	110+60.09	21.79	LT	747.38		1.5"
G	110+62.18	24.16	LT	747.35		1.7"
H	110+63.68	26.18	LT	747.33		2.3"
I	110+64.88	28.08	LT	747.30		2.5"
J	110+69.14	40.88	LT	746.90	EX	1.5"
K	110+66.16	41.23	LT	746.98	EX	
L	110+43.98	15.84	LT	748.26	EX	
M	110+43.84	16.41	LT	748.88	EX	
N	110+65.58	41.29	LT	747.22	EX	
O	110+60.72	28.20	LT	747.22		
P	110+57.64	28.29	LT	747.25		
Q	110+51.88	28.46	LT	747.69		
R	110+52.00	32.46	LT	747.55		
S	110+52.38	40.57	LT	747.19	EX	
T	110+48.58	40.79	LT	747.32	EX	
U	110+48.00	32.57	LT	747.61		
V	110+47.88	28.57	LT	747.75		
W	110+47.77	24.58	LT	747.78		
X	110+47.36	19.81	LT	748.16		
Y	110+47.15	17.46	LT	748.18		
Z	110+51.34	19.46	LT	748.13		
AA	110+51.77	24.46	LT	747.73		
AB	110+57.52	24.29	LT	747.27		

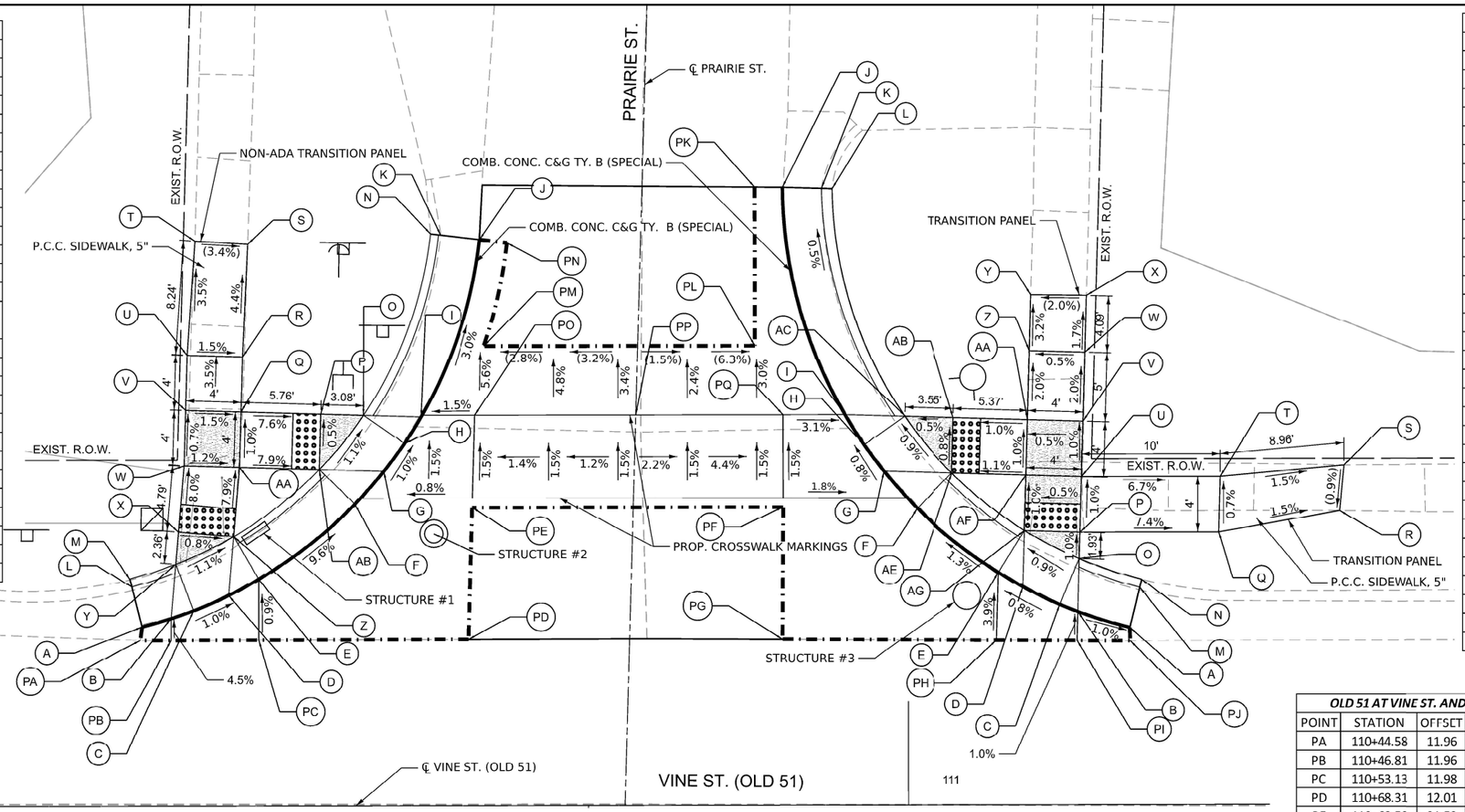

OLD 51 AT VINE ST. AND PRAIRIE-NW CORNER						
POINT	STATION	OFFSET	SIDE	ELEVATION		HMA THICK.
A	111+16.06	12.79	LT	747.11	EX	1.5"
B	111+12.31	13.95	LT	747.15		2.8"
C	111+11.00	14.48	LT	747.14		2.4"
D	111+08.35	15.75	LT	747.12		3.3"
E	111+06.58	16.77	LT	747.10		3.3"
F	111+00.69	21.43	LT	747.00		3.2"
G	110+98.27	24.12	LT	746.97		3.2"
H	110+96.84	26.04	LT	746.95		3.1"
I	110+95.46	28.20	LT	746.93		3.0"
J	110+90.98	44.63	LT	746.84	EX	1.5"
K	110+93.79	44.55	LT	746.72	EX	
L	110+94.56	44.53	LT	747.16	EX	
M	111+16.77	15.70	LT	746.96	EX	
N	111+16.91	16.27	LT	747.32	EX	
O	111+12.41	17.77	LT	747.03		
P	111+12.47	19.70	LT	747.01		
Q	111+22.47	19.70	LT	746.27		
R	111+31.19	21.20	LT	746.14	EX	
S	111+31.51	24.51	LT	746.17	EX	
T	111+22.59	23.70	LT	746.30		
U	111+12.58	23.70	LT	746.97		
V	111+12.70	27.70	LT	746.93		
W	111+12.84	32.70	LT	746.83		
X	111+12.96	36.79	LT	746.76	EX	
Y	111+08.95	36.84	LT	746.68	EX	
Z	111+08.84	32.81	LT	746.81		
AA	111+08.70	27.82	LT	746.91		
AB	111+03.33	27.97	LT	746.86		
AC	110+99.78	28.07	LT	746.84		
AE	111+03.21	23.97	LT	746.89		
AF	111+08.58	23.82	LT	746.95		
AG	111+08.47	19.82	LT	746.99		

OLD 51 AT VINE ST. AND PRAIRIE-WEST PAVEMENT						
POINT	STATION	OFFSET	SIDE	ELEVATION		HMA THICK.
PA	110+44.58	11.96	LT	748.42	EX	1.5"
PB	110+46.81	11.96	LT	748.38	EX	1.5"
PC	110+53.13	11.98	LT	748.28	EX	1.5"
PD	110+68.31	12.01	LT	748.03	EX	1.5"
PE	110+68.58	21.52	LT	747.46	EX	1.5"
PF	110+91.00	21.52	LT	747.17	EX	1.5"
PG	110+90.94	11.98	LT	747.62	EX	1.5"
PH	111+06.44	11.89	LT	747.29	EX	1.5"
PI	111+12.25	11.86	LT	747.17	EX	1.5"
PJ	111+16.07	11.84	LT	747.09	EX	1.5"
PK	110+88.98	44.65	LT	746.87	EX	1.5"
PL	110+88.98	33.20	LT	747.00	EX	1.5"
PM	110+69.43	33.20	LT	747.09	EX	1.5"
PN	110+71.13	40.64	LT	746.97	EX	1.5"
PO	110+68.77	28.20	LT	747.36		2.7"
PP	110+80.39	28.20	LT	747.50		1.9"
PQ	110+91.00	28.20	LT	747.07		2.3"

STRUCTURE #1
STA. 110+52.81, 19.70' LT
EXIST. INLET TO BE ADJUSTED
EXIST. RIM ELEV. = 747.60
PROP. RIM ELEV. = 747.94

STRUCTURE #2
STA. 110+65.69, 19.54' LT
EXIST. MANHOLE TO BE ADJUSTED
EXIST. RIM ELEV. = 747.81
PROP. RIM ELEV. = 747.81

STRUCTURE #3
STA. 111+04.18, 14.74' LT
EXIST. MANHOLE TO BE ADJUSTED
EXIST. RIM ELEV. = 747.11
PROP. RIM ELEV. = 747.20

0 5 10 15
SCALE IN FEET

GENERAL NOTES:

1. REFER TO ADA CURB RAMP PAVEMENT REMOVAL & REPLACEMENT DETAIL (SHEET 70).
2. CONTRACTOR SHALL VERIFY EXISTING FIELD CONDITIONS PRIOR TO THE CONSTRUCTION OF ANY RAMP OR SIDEWALK. ANY ADJUSTMENTS NECESSARY TO MEET EXISTING FIELD CONDITIONS SHALL BE APPROVED BY THE ENGINEER PRIOR TO CONSTRUCTION.
3. PROPOSED PAVEMENT MARKINGS ARE PROVIDED FOR INFORMATION ONLY. SEE PROPOSED PAVEMENT MARKING PLAN (SHEETS 55 AND 56).
4. FLOW LINE ELEVATION PERPENDICULAR TO CURB IS 0.04' LOWER THAN BACK OF CURB. SEE STANDARD 606001.
5. AT DEPRESSED CURBS ADJACENT TO CURB RAMPS ACCESSIBLE TO THE DISABLED, THE PERPENDICULAR GUTTER FLAG SLOPE SHALL BE -5.0% UNLESS NOTED OTHERWISE.
6. LIMITS OF VAR. DEPTH H.M.A. TO BE COORDINATED WITH ENGINEER TO ACHIEVE 5.0% MAX. CROSSWALK RUNNING SLOPE, 5.0% MAX. COUNTERSLOPE, AND 2.0% MAX CROSSWALK CROSS SLOPE.
7. TOOLED JOINTS NOT SHOWN. TOOLED JOINTS SHOULD BE CONSTRUCTED IN ACCORDANCE WITH SECTION 424 OF THE STANDARD SPECS AND AS DIRECTED BY THE ENGINEER.

LEGEND:

LIMITS OF VARYING H.M.A. THICKNESS (SEE CHART FOR THICKNESS - THICKNESS IS FROM TOP OF PROPOSED TO MILLED SURFACE)

DETECTABLE WARNINGS

PROPOSED TURNING SPACE

( ) EXISTING ELEVATION / SLOPE

DRAINAGE NOTES:

1. INLET RIM ELEVATION IS LOCATED AT GUTTER FLOWLINE.
2. TYPE 8 CRATE RIM ELEVATION IS LOCATED AT TOP OF CRATE.

MODEL: Prairie West ADA Detail [Sheet]
FILE NAME: F:\Projects\50 IDOT\50.155A.23_PTB_207_040_Heyworth ADA (Sub to Willett Hoffman)\Workfiles\Sheets\D570G11-sht-ADA Prairie West.dgn

HERMANN & Associates, LLC
Civil Engineers

USER NAME = jusliin	DESIGNED - CRM	REVISED -	
	DRAWN - AMH	REVISED -	
PLOT SCALE = 0.16666633 ' / in.	CHECKED - JSW	REVISED -	
PLOT DATE = 3/18/2024	DATE -	REVISED -	

STATE OF ILLINOIS
DEPARTMENT OF TRANSPORTATION

ADA DETAIL - PRAIRIE WEST
OLD US 51 / VINE ST.

SCALE: 1"=5' | SHEET OF 14 SHEETS | STA. TO STA.

F.A. RTE.	SECTION	COUNTY	TOTAL SHEETS	SHEET NO.
*	(55/56)RS-5,57-1(1)RS-1	MCLEAN	85	47
		CONTRACT NO. 70G11		
		ILLINOIS	FED. AID PROJECT	

OLD 51 AT VINE ST. AND PRAIRIE-SE CORNER						
POINT	STATION	OFFSET	SIDE	ELEVATION		HMA THICK.
A	110+30.94	11.92	RT	748.75	EX	1.5"
B	110+45.85	13.36	RT	748.37		1.5"
C	110+47.24	13.90	RT	748.35		1.5"
D	110+52.49	16.80	RT	748.29		4.8"
E	110+61.85	27.95	RT	747.71		1.5"
F	110+63.83	33.74	RT	747.65		1.5"
G	110+64.00	34.55	RT	747.64		1.5"
H	110+64.36	44.45	RT	747.58	EX	1.5"
I	110+61.36	44.33	RT	747.55	EX	
J	110+60.78	44.30	RT	747.55	EX	
K	110+60.33	34.52	RT	747.54		
L	110+58.61	29.47	RT	747.60		
M	110+50.43	19.73	RT	748.18		
N	110+45.85	17.20	RT	748.25		
O	110+30.94	15.63	RT	749.13	EX	
P	110+30.94	15.05	RT	748.72	EX	
Q	110+15.83	20.76	RT	748.86	EX	
R	110+15.83	24.69	RT	748.87	EX	
S	110+32.10	21.74	RT	749.07		
T	110+43.52	22.73	RT	748.20	EX	
U	110+46.99	24.65	RT	748.16		
V	110+53.17	32.01	RT	747.55		
W	110+54.48	35.84	RT	747.50		
X	110+54.92	40.74	RT	747.40		
Y	110+54.35	46.72	RT	747.45		
Z	110+53.82	52.15	RT	747.69	EX	
AA	110+57.57	52.28	RT	747.62	EX	
AB	110+58.35	46.89	RT	747.50		
AC	110+60.91	41.01	RT	747.42		
AD	110+58.92	40.91	RT	747.44		

OLD 51 AT VINE ST. AND PRAIRIE-SE CORNER PAVEMENT						
POINT	STATION	OFFSET	SIDE	ELEVATION		HMA THICK.
PB	110+45.85	11.24	RT	748.46	EX	1.5"
PD	110+53.63	15.16	RT	748.31	EX	1.5"
PE	110+63.66	27.10	RT	748.14	EX	1.5"
PF	110+67.43	28.58	RT	747.81	EX	1.5"
PG	110+67.44	34.58	RT	747.79	EX	1.5"
PH	110+67.44	44.58	RT	747.77	EX	1.5"
PI	110+67.43	32.93	RT	747.83	EX	1.5"
PJ	110+67.44	34.58	RT	747.81	EX	1.5"
PK	110+67.44	44.58	RT	747.70	EX	1.5"

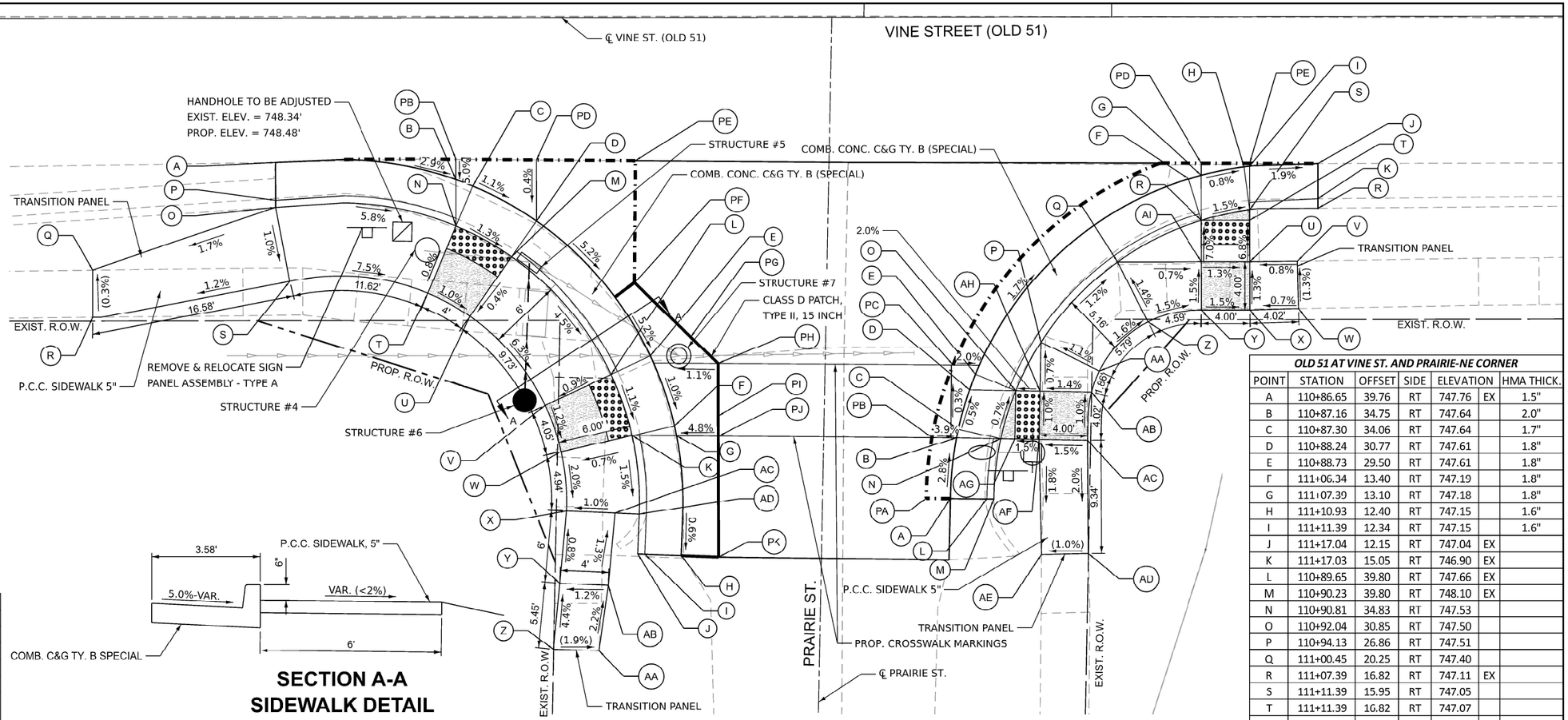

OLD 51 AT VINE ST. AND PRAIRIE-NE CORNER						
POINT	STATION	OFFSET	SIDE	ELEVATION		HMA THICK.
A	110+86.65	39.76	RT	747.76	EX	1.5"
B	110+87.16	34.75	RT	747.64		2.0"
C	110+87.30	34.06	RT	747.64		1.7"
D	110+88.24	30.77	RT	747.61		1.8"
E	110+88.73	29.50	RT	747.61		1.8"
F	111+06.34	13.40	RT	747.19		1.8"
G	111+07.39	13.10	RT	747.18		1.8"
H	111+10.93	12.40	RT	747.15		1.6"
I	111+11.39	12.34	RT	747.15		1.6"
J	111+17.04	12.15	RT	747.04	EX	
K	111+17.03	15.05	RT	746.90	EX	
L	110+89.65	39.80	RT	747.66	EX	
M	110+90.23	39.80	RT	748.10	EX	
N	110+90.81	34.83	RT	747.53		
O	110+92.04	30.85	RT	747.50		
P	110+94.13	26.86	RT	747.51		
Q	111+00.45	20.25	RT	747.40		
R	111+07.39	16.82	RT	747.11	EX	
S	111+11.39	15.95	RT	747.05		
T	111+11.39	16.82	RT	747.07		
U	111+11.39	20.25	RT	747.30		
V	111+15.31	20.22	RT	747.32	EX	
W	111+15.41	24.13	RT	747.38	EX	
X	111+11.39	24.25	RT	747.35		
Y	111+07.39	24.25	RT	747.41		
Z	111+02.95	25.21	RT	747.48		
AA	110+98.94	29.25	RT	747.57		
AB	110+98.29	30.98	RT	747.60		
AC	110+97.96	34.98	RT	747.64		
AD	110+97.99	44.32	RT	747.45	EX	
AE	110+94.14	44.40	RT	747.41	EX	
AF	110+93.96	34.90	RT	747.58		
AG	110+91.96	34.85	RT	747.55		
AH	110+94.04	30.90	RT	747.54		
AI	111+07.39	20.25	RT	747.35		

OLD 51 AT VINE ST. AND PRAIRIE-NE CORNER PAVEMENT						
POINT	STATION	OFFSET	SIDE	ELEVATION		HMA THICK.
PA	110+84.65	39.74	RT	747.82	EX	1.5"
PB	110+85.13	34.74	RT	747.72	EX	1.5"
PC	110+86.87	28.75	RT	747.64	EX	1.5"
PD	111+07.40	12.11	RT	747.20	EX	1.5"
PE	111+11.39	12.12	RT	747.15	EX	1.5"

STRUCTURE #4
STA. 110+43.52, 19.25' RT
EXIST. MANHOLE TO BE ADJUSTED
PROP. TYPE 1 FRAME, CLOSED LID
EXIST. RIM ELEV. = 748.33
PROP. RIM ELEV. = 748.32
EXIST. INVERT ELEV. = 745.64

STRUCTURE #5
STA. 110+51.89, 20.26' RT
EXIST. INLET TO BE ADJUSTED
EXIST. RIM ELEV. = 747.93
PROP. RIM ELEV. = 748.05
EXIST. INVERT ELEV. = 745.24 S (IN)
EXIST. INVERT ELEV. = 745.25 N (OUT)
PROP. INVERT ELEV. = 745.30 W (IN)

STRUCTURE #6
STA. 110+51.48, 31.59' RT
PROP. INLET
TYPE A, TYPE 8 GRATE
PROP. RIM ELEV. = 747.55
PROP. INVERT ELEV. = 745.47 W (OUT)
11.34' - S.S. CL A
TY 1, 12" @ 1.5%

STRUCTURE #7
STA. 110+64.20, 27.95' RT
EXIST. MANHOLE TO BE ADJUSTED
EXIST. RIM ELEV. = 747.99
PROP. RIM ELEV. = 747.73
55" FROM RIM TO BOTTOM
UNSURE OF N END POINT
UNSURE OF S ORIGIN

0 5 10 15
SCALE IN FEET

GENERAL NOTES:

1. REFER TO ADA CURB RAMP PAVEMENT REMOVAL & REPLACEMENT DETAIL (SHEET 70).
2. CONTRACTOR SHALL VERIFY EXISTING FIELD CONDITIONS PRIOR TO THE CONSTRUCTION OF ANY RAMP OR SIDEWALK. ANY ADJUSTMENTS NECESSARY TO MEET EXISTING FIELD CONDITIONS SHALL BE APPROVED BY THE ENGINEER PRIOR TO CONSTRUCTION.
3. PROPOSED PAVEMENT MARKINGS ARE PROVIDED FOR INFORMATION ONLY. SEE PROPOSED PAVEMENT MARKING PLAN (SHEETS 55 AND 56).
4. FLOW LINE ELEVATION PERPENDICULAR TO CURB IS 0.04' LOWER THAN BACK OF CURB. SEE STANDARD 606001.
5. AT DEPRESSED CURBS ADJACENT TO CURB RAMPS ACCESSIBLE TO THE DISABLED, THE PERPENDICULAR GUTTER FLAG SLOPE SHALL BE -5.0% UNLESS NOTED OTHERWISE.
6. LIMITS OF VAR. DEPTH H.M.A. TO BE COORDINATED WITH ENGINEER TO ACHIEVE 5.0% MAX. CROSSWALK RUNNING SLOPE, 5.0% MAX. COUNTERSLOPE, AND 2.0% MAX CROSSWALK CROSS SLOPE.
7. TOOLED JOINTS NOT SHOWN. TOOLED JOINTS SHOULD BE CONSTRUCTED IN ACCORDANCE WITH SECTION 424 OF THE STANDARD SPECS AND AS DIRECTED BY THE ENGINEER.

LEGEND:

LIMITS OF VARYING H.M.A. THICKNESS (SEE CHART FOR THICKNESS - THICKNESS IS FROM TOP OF PROPOSED TO MILLED SURFACE)

DETECTABLE WARNINGS

PROPOSED TURNING SPACE

( ) EXISTING ELEVATION / SLOPE

DRAINAGE NOTES:

1. INLET RIM ELEVATION IS LOCATED AT GUTTER FLOWLINE.
2. TYPE 8 GRATE RIM ELEVATION IS LOCATED AT TOP OF GRATE.

HERMANN & Associates, LLC Civil Engineers

USER NAME = justin	DESIGNED - CRM	REVISED -	
	DRAWN - AMH	REVISED -	
PLOT SCALE = 0.16666633 ' / in.	CHECKED - JSW	REVISED -	
PLOT DATE = 3/18/2024	DATE -	REVISED -	

STATE OF ILLINOIS
DEPARTMENT OF TRANSPORTATION

ADA DETAIL - PRAIRIE EAST
OLD US 51 / VINE ST.

SCALE: 1"=5' | SHEET OF 14 SHEETS | STA. TO STA.

F.A. RTE.	SECTION	COUNTY	TOTAL SHEETS	SHEET NO.
*	(55/56)RS-5,57-1(1)RS-1	MCLEAN	85	48
		CONTRACT NO. 70G11		
		ILLINOIS	FED. AID PROJECT	

MODEL: Prairie East ADA Detail [Sheet]
FILE NAME: F:\Projects\50 IDOT\50.155A_23_PTB_207_040_Heyworth ADA (Sub to Willet Hoffman)\Workfile\Sheets\D570G11-sht-ADA Paire East.dgn

OLD 51 AT VINE ST. AND MAIN-SW CORNER						
POINT	STATION	OFFSET	SIDE	ELEVATION		HMA THICK.
A	114+24.64	12.11	LT	742.41	EX	1.5"
B	114+33.34	13.74	LT	742.22		2.5"
C	114+34.84	14.33	LT	742.21		3.4"
D	114+37.40	15.53	LT	742.17		4.6"
E	114+39.39	16.67	LT	742.15		5.6"
F	114+50.64	27.99	LT	741.34		1.5"
G	114+51.62	29.72	LT	741.32		1.5"
H	114+52.88	32.41	LT	741.28		1.7"
I	114+53.38	33.67	LT	741.27		2.1"
J	114+55.48	45.66	LT	740.89	EX	1.5"
K	114+52.48	45.64	LT	740.74	EX	
L	114+24.40	15.06	LT	742.37	EX	
M	114+24.35	15.64	LT	742.70	EX	
N	114+51.89	45.63	LT	741.16	EX	
O	114+49.57	33.79	LT	741.17		
P	114+47.69	33.84	LT	741.18		
Q	114+37.95	34.13	LT	741.70		
R	114+38.09	41.96	LT	741.63	EX	
S	114+34.13	42.11	LT	741.60	EX	
T	114+33.96	34.25	LT	741.75		
U	114+33.84	30.26	LT	741.80		
V	114+33.52	19.84	LT	742.09		
W	114+33.46	17.64	LT	742.10		
X	114+37.52	19.72	LT	742.04		
Y	114+37.83	30.14	LT	741.75		
Z	114+47.57	29.84	LT	741.23		

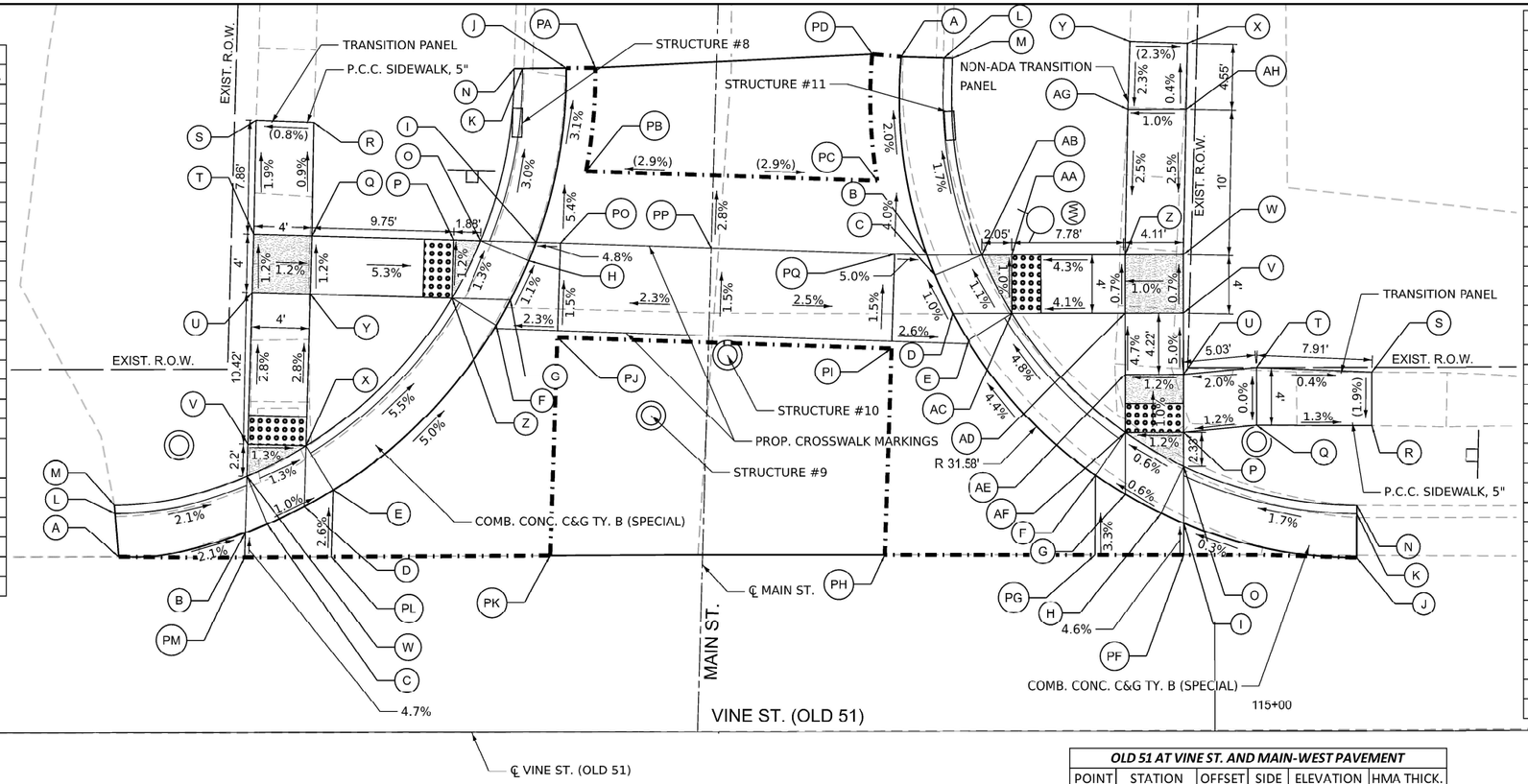

OLD 51 AT VINE ST. AND MAIN-NW CORNER						
POINT	STATION	OFFSET	SIDE	ELEVATION		HMA THICK.
A	114+78.46	46.41	LT	740.84	EX	1.5"
B	114+80.21	32.75	LT	741.11		1.7"
C	114+80.75	31.38	LT	741.12		1.5"
D	114+81.98	28.75	LT	741.15		1.5"
E	114+83.06	26.86	LT	741.17		1.5"
F	114+91.83	17.60	LT	741.74		5.6"
G	114+93.88	16.28	LT	741.75		4.9"
H	114+96.34	14.97	LT	741.77		3.7"
I	114+97.88	14.29	LT	741.78		3.8"
J	115+09.74	11.91	LT	741.82	EX	1.5"
K	115+09.76	14.91	LT	741.91	EX	
L	114+81.40	46.33	LT	740.77	EX	
M	114+81.98	46.31	LT	740.77	EX	
N	115+09.76	15.49	LT	742.08	EX	
O	114+97.88	18.21	LT	741.66		
P	114+97.88	20.54	LT	741.68		
Q	115+02.89	21.00	LT	741.74		
R	115+10.80	20.96	LT	741.64	EX	
S	115+10.80	24.67	LT	741.71	EX	
T	115+02.89	25.00	LT	741.74		
U	114+97.88	24.54	LT	741.64		
V	114+97.88	28.75	LT	741.43		
W	114+97.88	32.75	LT	741.40		
X	114+98.19	47.30	LT	741.63	EX	
Y	114+94.25	47.43	LT	741.72	EX	
Z	114+93.88	32.75	LT	741.36		
AA	114+86.11	32.75	LT	741.03		
AB	114+84.05	32.75	LT	741.02		
AC	114+86.11	28.75	LT	741.07		
AD	114+93.88	28.75	LT	741.39		
AE	114+93.88	24.54	LT	741.59		
AF	114+93.88	20.54	LT	741.63		
AG	114+94.10	42.75	LT	741.61		
AH	114+98.10	42.75	LT	741.65		

OLD 51 AT VINE ST. AND MAIN-WEST PAVEMENT						
POINT	STATION	OFFSET	SIDE	ELEVATION		HMA THICK.
PA	114+57.48	45.68	LT	740.96	EX	1.5"
PB	114+56.82	38.56	LT	741.11	EX	1.5"
PC	114+76.80	37.87	LT	741.07	EX	1.5"
PD	114+76.47	46.60	LT	740.91	EX	1.5"
PF	114+97.88	12.00	LT	741.88	EX	1.5"
PG	114+91.80	12.14	LT	741.92	EX	1.5"
PH	114+77.28	12.16	LT	742.03	EX	1.5"
PI	114+77.77	26.33	LT	741.32	EX	1.5"
PJ	114+54.83	27.13	LT	741.45	EX	1.5"
PK	114+54.32	12.15	LT	742.18	EX	1.5"
PL	114+39.26	12.13	LT	742.27	EX	1.5"
PM	114+33.29	12.12	LT	742.29	EX	1.5"
PO	114+55.06	33.62	LT	741.35		2.7"
PP	114+65.41	33.26	LT	741.54		2.2"
PQ	114+77.99	32.83	LT	741.22		2.4"

STRUCTURE #8
STA. 114+52.11, 41.89' LT
EXIST. INLET TO BE ADJUSTED
EXIST. RIM EL EV. = 740.60
PROP. RIM ELEV. = 740.87

STRUCTURE #9
STA. 114+61.26, 21.75' LT
EXIST. MANHOLE TO BE ADJUSTED
EXIST. RIM EL EV. = 741.87
PROP. RIM ELEV. = 741.87

STRUCTURE #10
STA. 114+66.50, 25.91' LT
EXIST. MANHOLE TO BE ADJUSTED
EXIST. RIM EL EV. = 741.81
PROP. RIM ELEV. = 741.81

STRUCTURE #11
STA. 114+81.79, 41.63' LT
EXIST. INLET TO BE ADJUSTED
EXIST. RIM EL EV. = 740.71
PROP. RIM ELEV. = 740.79

N

0 5 10 15
SCALE IN FEET

GENERAL NOTES:

1. REFER TO ADA CURB RAMP PAVEMENT REMOVAL & REPLACEMENT DETAIL (SHEET 70).
2. CONTRACTOR SHALL VERIFY EXISTING FIELD CONDITIONS PRIOR TO THE CONSTRUCTION OF ANY RAMP OR SIDEWALK. ANY ADJUSTMENTS NECESSARY TO MEET EXISTING FIELD CONDITIONS SHALL BE APPROVED BY THE ENGINEER PRIOR TO CONSTRUCTION.
3. PROPOSED PAVEMENT MARKINGS ARE PROVIDED FOR INFORMATION ONLY. SEE PROPOSED PAVEMENT MARKING PLAN (SHEETS 55 AND 56).
4. FLOW LINE ELEVATION PERPENDICULAR TO CURB IS 0.04' LOWER THAN BACK OF CURB. SEE STANDARD 606001.
5. AT DEPRESSED CURBS ADJACENT TO CURB RAMPS ACCESSIBLE TO THE DISABLED, THE PERPENDICULAR GUTTER FLAG SLOPE SHALL BE -5.0% UNLESS NOTED OTHERWISE.
6. LIMITS OF VAR. DEPTH H.M.A. TO BE COORDINATED WITH ENGINEER TO ACHIEVE 5.0% MAX. CROSSWALK RUNNING SLOPE, 5.0% MAX. COUNTERSLOPE, AND 2.0% MAX CROSSWALK CROSS SLOPE.
7. TOOLED JOINTS NOT SHOWN. TOOLED JOINTS SHOULD BE CONSTRUCTED IN ACCORDANCE WITH SECTION 424 OF THE STANDARD SPECS AND AS DIRECTED BY THE ENGINEER.

LEGEND:

LIMITS OF VARYING H.M.A. THICKNESS (SEE CHART FOR THICKNESS - THICKNESS IS FROM TOP OF PROPOSED TO MILLED SURFACE)

DETECTABLE WARNINGS

PROPOSED TURNING SPACE

( ) EXISTING ELEVATION / SLOPE

DRAINAGE NOTES:

1. INLET RIM ELEVATION IS LOCATED AT GUTTER FLOWLINE.
2. TYPE 8 GRATE RIM ELEVATION IS LOCATED AT TOP OF GRATE.

MODEL: Main West ADA Detail [Sheet]
FILE NAME: F:\Projects\70 IDOT\50.155A.23_PTB_207_040_Heyworth ADA (Sub to Villlet Hoffman)\Workfile\Sheets\D570G11-sht-ADA Main West.dgn

HERMANN & Associates, LLC
Civil Engineers

USER NAME = justin	DESIGNED - CRM	REVISED -	
	DRAWN - AMH	REVISED -	
PLOT SCALE = 0.16666633 ' / in.	CHECKED - JSW	REVISED -	
PLOT DATE = 3/18/2024	DATE -	REVISED -	

STATE OF ILLINOIS
DEPARTMENT OF TRANSPORTATION

ADA DETAIL - MAIN WEST
OLD US 51 / VINE ST.

SCALE: 1"=5' | SHEET OF 14 SHEETS | STA. TO STA.

F.A. RTE.	SECTION	COUNTY	TOTAL SHEETS	SHEET NO.
*	(55/56)RS-5,57-1(1)RS-1	MCLEAN	85	49
		CONTRACT NO. 70G11		
		ILLINOIS FED. AID PROJECT		

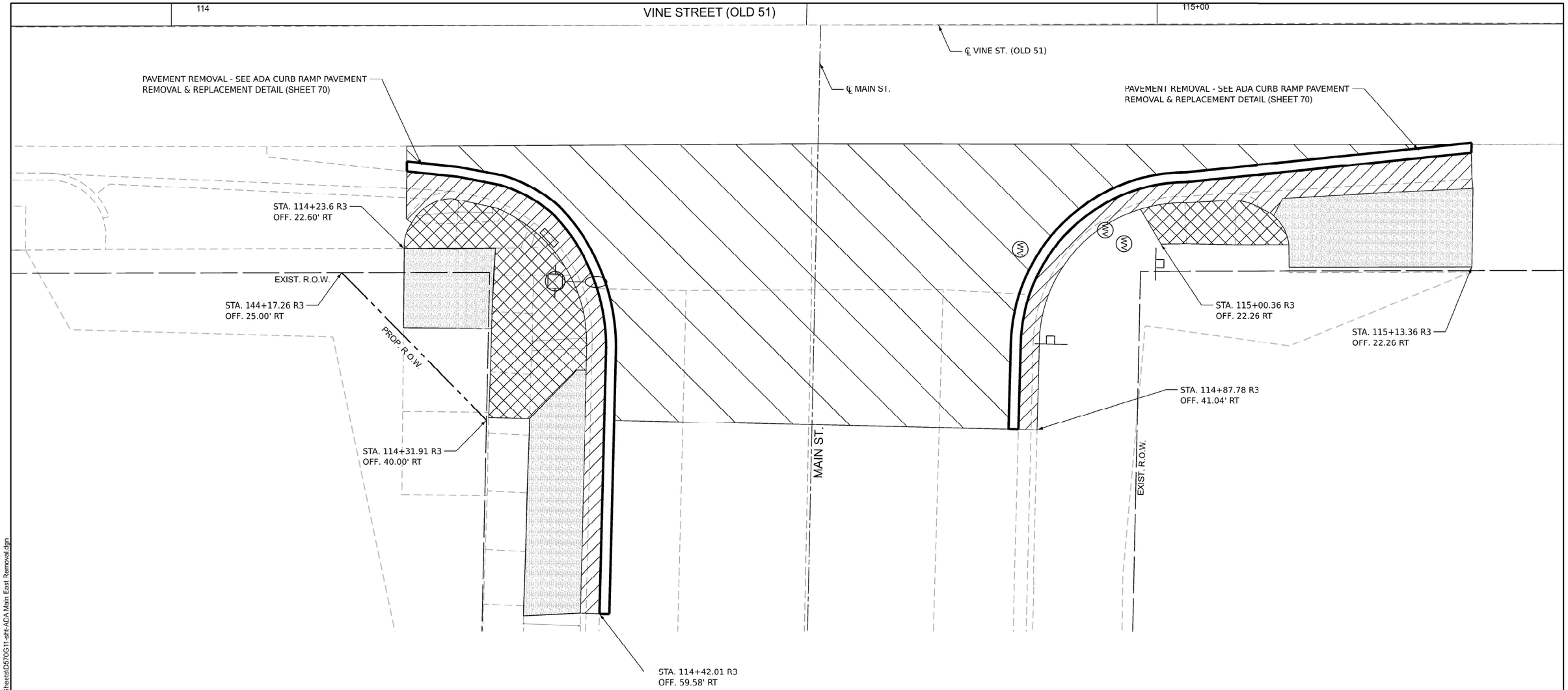

LEGEND:

- HOT-MIX ASPHALT SURFACE REMOVAL (SPECIAL)
- SIDEWALK REMOVAL
- COMBINATION CURB AND GUTTER REMOVAL
- DRIVEWAY PAVEMENT REMOVAL

N

0 5 10 15
SCALE IN FEET

MODEL: Main East Removal [Sheet]
FILE NAME: F:\Projects\30 IDOT\50.155A.23_PTB_207_040_Heyworth ADA (Sub to Willett Hoffman)\Workfile\Sheets\D570G11-sht-ADA Main East Removal.dgn

HERMANN & Associates, LLC
Civil Engineers

USER NAME = justin	DESIGNED - CRM	REVISED -	
	DRAWN - AMH	REVISED -	
PLOT SCALE = 0.16666633 ' / in.	CHECKED - JSW	REVISED -	
PLOT DATE = 5/2/2024	DATE -	REVISED -	

STATE OF ILLINOIS
DEPARTMENT OF TRANSPORTATION

REMOVAL PLAN - MAIN EAST
OLD US 51 / VINE ST.

SCALE: 1"=5' | SHEET OF 14 SHEETS | STA. TO STA.

F.A. RTE.	SECTION	COUNTY	TOTAL SHEETS	SHEET NO.
*	(55/56)RS-5,57-1(1)RS-1	MCLEAN	85	43
		CONTRACT NO. 70G11		
	ILLINOIS	FED. AID PROJECT		

OLD 51 AT VINE ST. AND CLARKE-SW CORNER						
POINT	STATION	OFFSET	SIDE	ELEVATION		HMA THICK.
A	118+46.55	33.11	LT	740.61	EX	1.5"
B	118+45.16	29.96	LT	740.78		2.8"
C	118+44.23	28.25	LT	740.80		2.8"
D	118+42.82	26.02	LT	740.83		1.8"
E	118+41.18	23.85	LT	740.86		1.5"
F	118+35.86	18.69	LT	741.55		5.9"
G	118+33.59	17.09	LT	741.57		4.9"
H	118+31.28	15.73	LT	741.61		3.7"
I	118+29.53	14.85	LT	741.63		3.1"
J	118+24.62	13.04	LT	741.68	EX	1.5"
K	118+23.76	15.91	LT	741.54	EX	
L	118+43.74	34.16	LT	740.62	EX	
M	118+43.19	34.37	LT	741.08	EX	
N	118+23.59	16.47	LT	741.88	EX	
O	118+29.64	18.92	LT	741.50		
P	118+29.72	21.68	LT	741.48		
Q	118+29.86	26.39	LT	741.11		
R	118+29.97	30.39	LT	741.13		
T	118+30.51	49.38	LT	741.84		
U	118+30.01	54.40	LT	741.88	EX	
V	118+33.91	54.29	LT	741.88	EX	
W	118+34.51	49.27	LT	741.82		
Y	118+33.97	30.27	LT	741.07		
Z	118+38.54	30.15	LT	740.71		
AA	118+41.15	30.07	LT	740.70		
AB	118+38.42	26.15	LT	740.75		
AC	118+33.85	26.28	LT	741.06		
AD	118+33.72	21.57	LT	741.44		

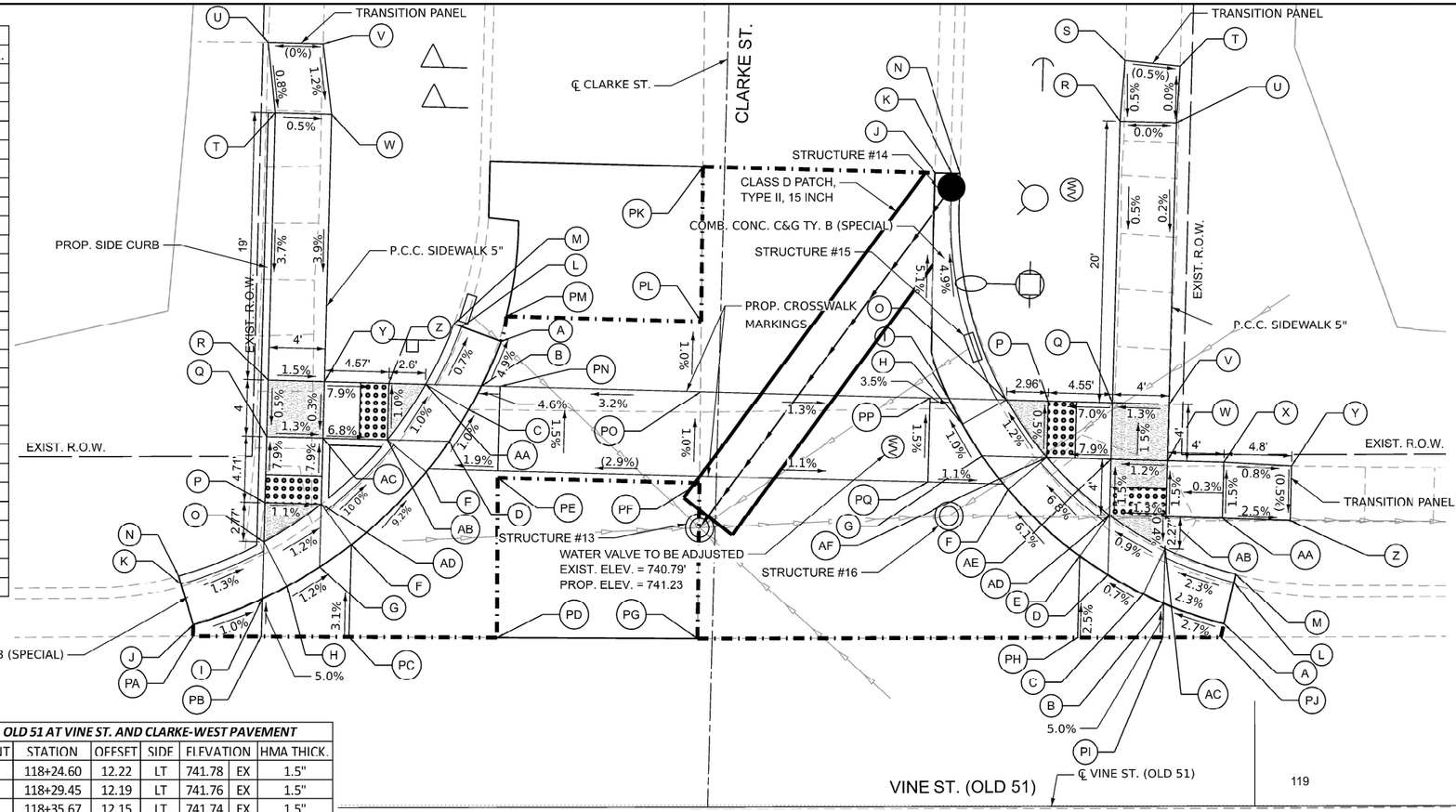

OLD 51 AT VINE ST. AND CLARKE-NW CORNER						
POINT	STATION	OFFSET	SIDE	ELEVATION		HMA THICK.
A	118+97.83	12.99	LT	741.72	EX	1.5"
B	118+93.56	14.43	LT	741.60		2.4"
C	118+92.11	15.08	LT	741.59		3.1"
D	118+89.61	16.46	LT	741.57		4.1"
E	118+87.62	17.80	LT	741.55		5.7"
F	118+82.55	22.51	LT	741.13		5.1"
G	118+80.69	24.95	LT	741.11		7.0"
H	118+79.30	27.17	LT	741.07		8.8"
I	118+78.35	29.02	LT	741.05		9.7"
J	118+77.40	45.02	LT	740.22	EX	1.5"
K	118+78.60	44.99	LT	740.14	EX	
L	118+98.54	15.90	LT	741.56	EX	
M	118+98.67	16.47	LT	741.94	EX	
N	118+79.18	44.97	LT	740.62	EX	
O	118+82.44	28.90	LT	740.96		
P	118+85.41	28.82	LT	741.00		
Q	118+89.96	28.69	LT	741.32		
R	118+90.52	48.68	LT	741.41		
S	118+90.89	53.00	LT	741.43	EX	
T	118+94.79	52.58	LT	741.41	EX	
U	118+94.52	48.57	LT	741.41		
V	118+93.96	28.57	LT	741.37		
W	118+93.84	24.58	LT	741.43		
X	11897.841	24.462	LT	741.44		
Y	119+02.64	24.18	LT	741.40	EX	
Z	119+02.54	20.29	LT	741.38	EX	
AA	118+97.73	20.46	LT	741.50		
AB	118+93.73	20.58	LT	741.49		
AC	118+93.67	18.31	LT	741.48		
AD	118+89.73	20.69	LT	741.44		
AE	118+89.84	24.69	LT	741.38		
AF	118+85.29	24.82	LT	741.02		

OLD 51 AT VINE ST. AND CLARKE-WEST PAVEMENT						
POINT	STATION	OFFSET	SIDE	ELEVATION		HMA THICK.
PA	118+24.60	12.22	LT	741.78	EX	1.5"
PB	118+29.45	12.19	LT	741.76	EX	1.5"
PC	118+35.67	12.15	LT	741.74	EX	1.5"
PD	118+46.21	12.08	LT	741.70	EX	1.5"
PE	118+46.28	23.42	LT	740.96	EX	1.5"
PF	118+60.58	23.02	LT	741.38	EX	1.5"
PG	118+60.42	11.99	LT	741.64	EX	1.5"
PH	118+87.45	12.01	LT	741.70	EX	1.5"
PI	118+93.49	12.01	LT	741.71	EX	1.5"
PJ	118+97.61	12.02	LT	741.72	EX	1.5"
PK	118+60.86	45.49	LT	741.26	EX	1.5"
PL	118+60.73	34.52	LT	741.26	EX	1.5"
PM	118+46.91	34.91	LT	740.61	EX	1.5"
PN	118+46.46	29.92	LT	740.85		3.1"
PO	118+60.67	29.52	LT	741.31		2.1"
PP	118+76.94	29.06	LT	741.10		10.2"
PQ	118+76.77	23.06	LT	741.19		6.3"

STRUCTURE #13
STA. 118+60.58, 19.85' LT
EXIST. MANHOLE TO BE ADJUSTED
EXIST. RIM ELEV. = 741.51
EXIST. INVERT ELEV. = 734.24 S (IN)
EXIST. INVERT ELEV. = 737.61 SW (IN)
EXIST. INVERT ELEV. = 737.59 NW (IN)
EXIST. INVERT ELEV. = 737.16 NE (IN)
EXIST. INVERT ELEV. = 733.82 N (OUT)
PROP. INVERT ELEV. – 734.92 NW (IN)
UNSURE OF NE ORIGIN
UNSURE OF S ORIGIN

STRUCTURE #14
STA. 118+78.55, 43.99' LT
PROP. MANHOLE
TYPE A, 4'-DIAMETER, TYPE 3 FRAME AND GRATE
PROP. RIM ELEV. = 740.20
PROP. INVERT ELEV. = 735.38 E (OUT)

STRUCTURE #15
STA. 118+80.08, 32.62' LT
EXIST. INLET TO BE ADJUSTED
EXIST. RIM ELEV. = 740.06
PROP. RIM ELEV. = 740.75
EXIST. INVERT ELEV. = 738.18 S (OUT)

STRUCTURE #16
STA. 118+78.35, 20.66' LT
EXIST. MANHOLE TO BE ADJUSTED
EXIST. RIM ELEV. = 741.01
PROP. RIM ELEV. = 741.28
EXIST. INVERT ELEV. = 733.76 S (IN)
EXIST. INVERT ELEV. = 734.66 NW (IN)
EXIST. INVERT ELEV. = 733.68 N (OUT)
UNSURE OF NE ORIGIN

0 5 10 15
SCALE IN FEET

GENERAL NOTES:

1. REFER TO ADA CURB RAMP PAVEMENT REMOVAL & REPLACEMENT DETAIL (SHEET 70).
2. CONTRACTOR SHALL VERIFY EXISTING FIELD CONDITIONS PRIOR TO THE CONSTRUCTION OF ANY RAMP OR SIDEWALK. ANY ADJUSTMENTS NECESSARY TO MEET EXISTING FIELD CONDITIONS SHALL BE APPROVED BY THE ENGINEER PRIOR TO CONSTRUCTION.
3. PROPOSED PAVEMENT MARKINGS ARE PROVIDED FOR INFORMATION ONLY. SEE PROPOSED PAVEMENT MARKING PLAN (SHEETS 55 AND 56).
4. FLOW LINE ELEVATION PERPENDICULAR TO CURB IS 0.04' LOWER THAN BACK OF CURB. SEE STANDARD 606001.
5. AT DEPRESSED CURBS ADJACENT TO CURB RAMPS ACCESSIBLE TO THE DISABLED, THE PERPENDICULAR GUTTER FLAG SLOPE SHALL BE -5.0% UNLESS NOTED OTHERWISE.
6. LIMITS OF VAR. DEPTH H.M.A. TO BE COORDINATED WITH ENGINEER TO ACHIEVE 5.0% MAX. CROSSWALK RUNNING SLOPE, 5.0% MAX. COUNTERSLOPE, AND 2.0% MAX CROSSWALK CROSS SLOPE.
7. TOOLED JOINTS NOT SHOWN. TOOLED JOINTS SHOULD BE CONSTRUCTED IN ACCORDANCE WITH SECTION 424 OF THE STANDARD SPECS AND AS DIRECTED BY THE ENGINEER.

LEGEND:

LIMITS OF VARYING H.M.A. THICKNESS (SEE CHART FOR THICKNESS - THICKNESS IS FROM TOP OF PROPOSED TO MILLED SURFACE)

DETECTABLE WARNINGS

PROPOSED TURNING SPACE

( ) EXISTING ELEVATION / SLOPE

DRAINAGE NOTES:

1. INLET RIM ELEVATION IS LOCATED AT GUTTER FLOWLINE.
2. TYPE 8 GRATE RIM ELEVATION IS LOCATED AT TOP OF GRATE.

HERMANN & Associates, LLC
Civil Engineers

USER NAME = jusliri	DESIGNED - CRM	REVISED -
	DRAWN - AMH	REVISED -
PLOT SCALE = 0.16666633 ' / in.	CHECKED - JSW	REVISED -
PLOT DATE = 3/18/2024	DATE -	REVISED -

STATE OF ILLINOIS
DEPARTMENT OF TRANSPORTATION

ADA DETAIL - CLARKE WEST
OLD US 51 / VINE ST.

SCALE: 1"=5' | SHEET OF 14 SHEETS | STA. TO STA.

F.A. RTE.	SECTION	COUNTY	TOTAL SHEETS	SHEET NO.
*	(55/56)RS-5,57-1(1)RS-1	MCLEAN	85	51
		CONTRACT NO. 70G11		
	ILLINOIS	FED. AID PROJECT		

MODEL: Clarke West ADA Detail [Sheet]
FILE NAME: F:\Projects\30 IDOT\50.155A.23_PTB_207_040_-Heyworth ADA (Sub to Willett Hofmann)\Workfile\Sheets\D570G11-sht-ADA Clarke West.dgn

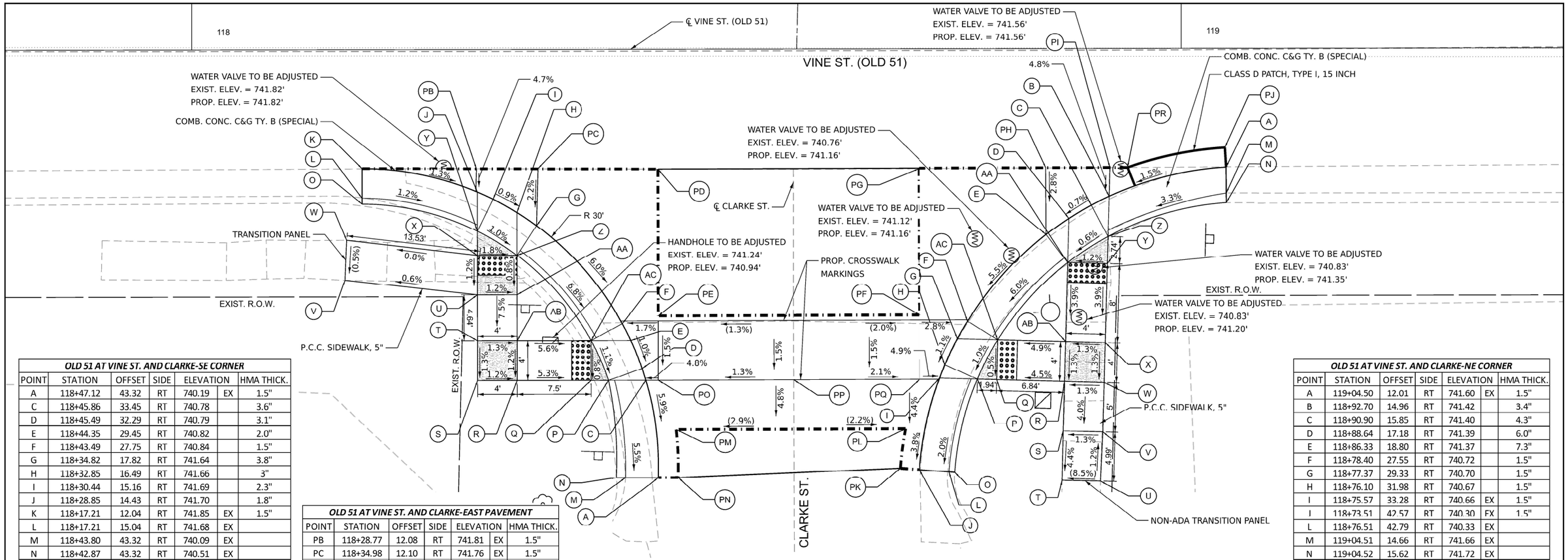

OLD 51 AT VINE ST. AND CLARKE-SE CORNER						
POINT	STATION	OFFSET	SIDE	ELEVATION		HMA THICK.
A	118+47.12	43.32	RT	740.19	EX	1.5"
C	118+45.86	33.45	RT	740.78		3.6"
D	118+45.49	32.29	RT	740.79		3.1"
E	118+44.35	29.45	RT	740.82		2.0"
F	118+43.49	27.75	RT	740.84		1.5"
G	118+34.82	17.82	RT	741.64		3.8"
H	118+32.85	16.49	RT	741.66		3"
I	118+30.44	15.16	RT	741.69		2.3"
J	118+28.85	14.43	RT	741.70		1.8"
K	118+17.21	12.04	RT	741.85	EX	1.5"
L	118+17.21	15.04	RT	741.68	EX	
M	118+43.80	43.32	RT	740.09	EX	
N	118+42.87	43.32	RT	740.51	EX	
O	118+17.20	15.62	RT	741.70	EX	
P	118+42.10	33.45	RT	740.68		
Q	118+40.34	33.45	RT	740.70		
R	118+32.85	33.45	RT	741.10		
S	118+28.85	33.45	RT	741.15		
T	118+28.85	29.45	RT	741.20		
U	118+28.85	24.81	RT	741.55		
V	118+15.47	23.31	RT	741.47	EX	
W	118+15.64	19.27	RT	741.49	EX	
X	118+28.85	20.81	RT	741.60		
Y	118+28.85	18.37	RT	741.58		
Z	118+32.85	20.82	RT	741.53		
AA	118+32.85	24.81	RT	741.50		
AB	118+32.85	29.45	RT	741.15		
AC	118+40.34	29.45	RT	740.73		

OLD 51 AT VINE ST. AND CLARKE-EAST PAVEMENT						
POINT	STATION	OFFSET	SIDE	ELEVATION		HMA THICK.
PB	118+28.77	12.08	RT	741.81	EX	1.5"
PC	118+34.98	12.10	RT	741.76	EX	1.5"
PD	118+47.12	12.14	RT	741.67	EX	1.5"
PE	118+47.12	26.95	RT	740.94	EX	1.5"
PF	118+73.48	26.90	RT	740.87	EX	1.5"
PG	118+73.46	12.09	RT	741.56	EX	1.5"
PH	118+86.31	12.06	RT	741.56	EX	1.5"
PI	118+92.79	12.05	RT	741.56	EX	1.5"
PJ	119+04.38	10.03	RT	741.61	EX	1.5"
PK	118+71.52	42.43	RT	740.41	EX	1.5"
PL	118+72.05	38.40	RT	740.53	EX	1.5"
PM	118+48.92	38.45	RT	740.43	EX	1.5"
PN	118+49.12	43.32	RT	740.28	EX	1.5"
PO	118+47.12	33.45	RT	740.84		4.1"
PP	118+60.78	33.42	RT	741.03		2.6"
PQ	118+73.50	33.40	RT	740.76		2.4"
PR	118+94.56	12.05	RT	741.56	EX	1.5"

OLD 51 AT VINE ST. AND CLARKE-NE CORNER						
POINT	STATION	OFFSET	SIDE	ELEVATION		HMA THICK.
A	119+04.50	12.01	RT	741.60	EX	1.5"
B	118+92.70	14.96	RT	741.42		3.4"
C	118+90.90	15.85	RT	741.40		4.3"
D	118+88.64	17.18	RT	741.39		6.0"
E	118+86.33	18.80	RT	741.37		7.3"
F	118+78.40	27.55	RT	740.72		1.5"
G	118+77.37	29.33	RT	740.70		1.5"
H	118+76.10	31.98	RT	740.67		1.5"
I	118+75.57	33.28	RT	740.66	EX	1.5"
J	118+73.51	42.57	RT	740.30	EX	1.5"
L	118+76.51	42.79	RT	740.33	EX	
M	119+04.51	14.66	RT	741.66	EX	
N	119+04.52	15.62	RT	741.72	EX	
O	118+77.09	42.83	RT	740.67	EX	
P	118+79.39	33.39	RT	740.56		
Q	118+81.33	33.44	RT	740.59		
R	118+88.17	33.64	RT	740.90		
S	118+88.03	38.64	RT	740.70		
T	118+87.91	43.65	RT	740.48	EX	
U	118+91.78	43.73	RT	740.81	EX	
V	118+92.03	38.75	RT	740.75		
W	118+92.17	33.75	RT	740.95		
X	118+92.29	29.75	RT	741.00		
Y	118+92.51	21.76	RT	741.31		
Z	118+92.59	19.02	RT	741.29		
AA	118+88.51	21.64	RT	741.26		
AB	118+88.29	29.64	RT	740.95		
AC	118+81.45	29.45	RT	740.61		

GENERAL NOTES:

1. REFER TO ADA CURB RAMP PAVEMENT REMOVAL & REPLACEMENT DETAIL (SHEET 70).
2. CONTRACTOR SHALL VERIFY EXISTING FIELD CONDITIONS PRIOR TO THE CONSTRUCTION OF ANY RAMP OR SIDEWALK. ANY ADJUSTMENTS NECESSARY TO MEET EXISTING FIELD CONDITIONS SHALL BE APPROVED BY THE ENGINEER PRIOR TO CONSTRUCTION.
3. PROPOSED PAVEMENT MARKINGS ARE PROVIDED FOR INFORMATION ONLY. SEE PROPOSED PAVEMENT MARKING PLAN (SHEETS 55 AND 56).
4. FLOW LINE ELEVATION PERPENDICULAR TO CURB IS 0.04' LOWER THAN BACK OF CURB. SEE STANDARD 606001.
5. AT DEPRESSED CURBS ADJACENT TO CURB RAMPS ACCESSIBLE TO THE DISABLED, THE PERPENDICULAR GUTTER FLAG SLOPE SHALL BE -5.0% UNLESS NOTED OTHERWISE.
6. LIMITS OF VAR. DEPTH H.M.A. TO BE COORDINATED WITH ENGINEER TO ACHIEVE 5.0% MAX. CROSSWALK RUNNING SLOPE, 5.0% MAX. COUNTERSLOPE, AND 2.0% MAX CROSSWALK CROSS SLOPE.
7. TOOLED JOINTS NOT SHOWN. TOOLED JOINTS SHOULD BE CONSTRUCTED IN ACCORDANCE WITH SECTION 424 OF THE STANDARD SPECS AND AS DIRECTED BY THE ENGINEER.

LEGEND:

LIMITS OF VARYING H.M.A. THICKNESS (SEE CHART FOR THICKNESS - THICKNESS IS FROM TOP OF PROPOSED TO MILLED SURFACE)

DETECTABLE WARNINGS

PROPOSED TURNING SPACE

( ) EXISTING ELEVATION / SLOPE

DRAINAGE NOTES:

1. INLET RIM ELEVATION IS LOCATED AT GUTTER FLOWLINE.
2. TYPE 8 GRATE RIM ELEVATION IS LOCATED AT TOP OF GRATE.

MODEL: Clarke East ADA Detail [Sheet]
FILE NAME: F:\Projects\50 IDOT\50.155A.23_PTB_207_049_-Heyworth ADA (Sub to Willett Hoffman)\Workfile\Sheets\D570G11-sht-ADA Clarke East.dgn

HERMANN & Associates, LLC
Civil Engineers

USER NAME = justin	DESIGNED - CRM	REVISED -	
	DRAWN - AMH	REVISED -	
PLOT SCALE = 0.16666633 ' / in.	CHECKED - JSW	REVISED -	
PLOT DATE = 3/18/2024	DATE -	REVISED -	

STATE OF ILLINOIS
DEPARTMENT OF TRANSPORTATION

ADA DETAIL - CLARKE EAST
OLD US 51 / VINE ST.

SCALE: 1"=5' | SHEET OF 14 SHEETS | STA. TO STA.

F.A. RTE.	SECTION	COUNTY	TOTAL SHEETS	SHEET NO.
*	(55/56)RS-5,57-1(1)RS-1	MCLEAN	85	52

CONTRACT NO. 70G11

ILLINOIS | FED. AID PROJECT

OLD 51 AT VINE ST. AND RANDOLPH-SW CORNER						
POINT	STATION	OFFSET	SIDE	ELEVATION		HMA THICK.
A	119+98.92	15.95	LT	741.37	EX	1.5"
B	120+06.45	21.50	LT	741.22		1.5"
C	120+08.74	24.00	LT	741.20		1.7"
D	120+10.25	25.97	LT	741.18		1.5"
E	120+11.58	28.00	LT	741.17	EX	1.5"
F	120+11.71	28.21	LT	741.17	EX	1.5"
G	120+09.30	29.64	LT	740.99	EX	
H	119+97.63	18.43	LT	741.22	EX	
I	119+97.31	19.06	LT	741.63	EX	
J	120+08.70	30.00	LT	741.46	EX	
K	120+07.40	28.00	LT	741.08		
L	120+03.99	28.00	LT	741.10		
M	119+87.20	28.00	LT	741.26		
N	119+82.20	28.00	LT	741.31		
O	119+82.20	24.00	LT	741.25		
P	119+82.20	23.00	LT	741.24		
Q	119+47.90	23.00	LT	741.35		
R	119+42.90	23.00	LT	741.37	EX	
S	119+42.83	19.64	LT	741.37	EX	
T	119+47.80	19.00	LT	741.33		
U	119+82.20	19.00	LT	741.18		
V	119+87.20	19.00	LT	741.13		
W	119+87.20	24.00	LT	741.20		
X	120+03.99	24.00	LT	741.12		

OLD 51 AT VINE ST. AND RANDOLPH-SW CORNER PAVEMENT						
POINT	STATION	OFFSET	SIDE	ELEVATION		HMA THICK.
PA	120+27.22	37.01	LT	741.22	EX	1.5"
PB	120+26.91	30.81	LT	741.28	EX	1.5"
PC	120+26.60	24.79	LT	741.34	EX	1.5"
PD	120+19.88	30.56	LT	741.19		2.0"
PE	120+15.26	36.59	LT	740.94	EX	1.5"
PF	120+12.86	30.31	LT	741.09	EX	1.5"

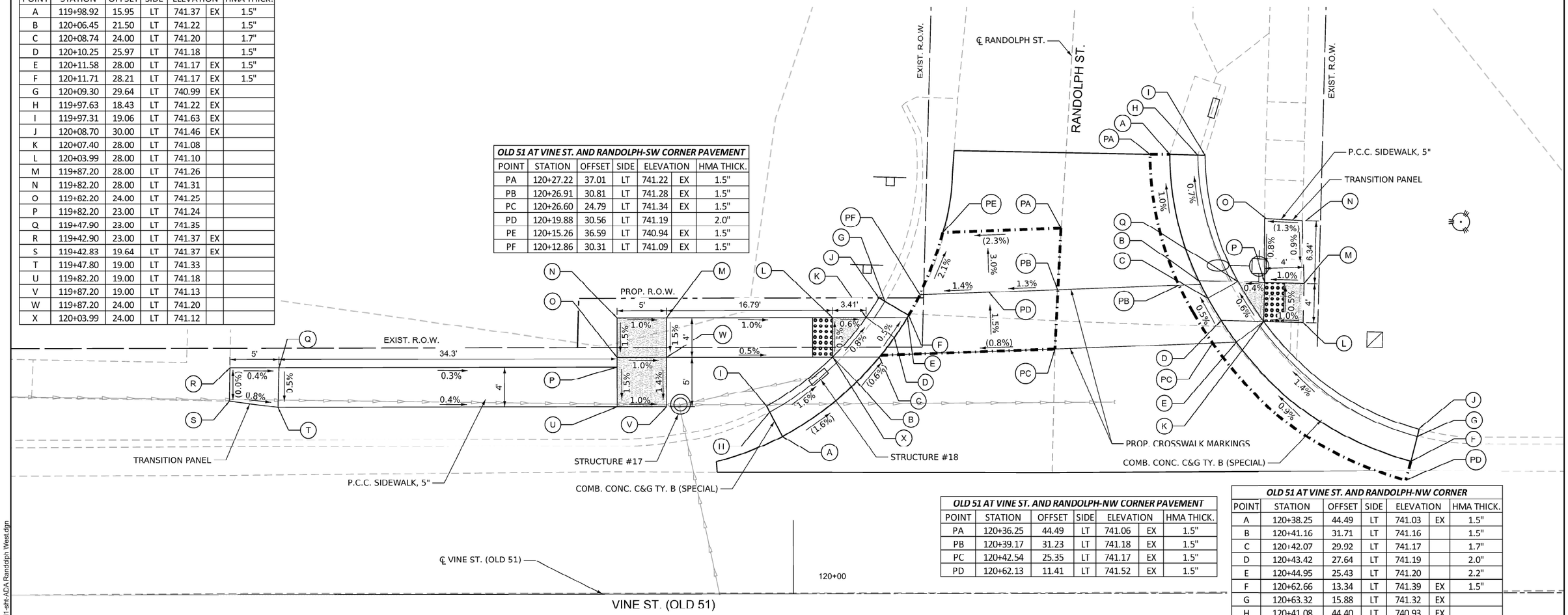

OLD 51 AT VINE ST. AND RANDOLPH-NW CORNER PAVEMENT						
POINT	STATION	OFFSET	SIDE	ELEVATION		HMA THICK.
PA	120+36.25	44.49	LT	741.06	EX	1.5"
PB	120+39.17	31.23	LT	741.18	EX	1.5"
PC	120+42.54	25.35	LT	741.17	EX	1.5"
PD	120+62.13	11.41	LT	741.52	EX	1.5"

OLD 51 AT VINE ST. AND RANDOLPH-NW CORNER						
POINT	STATION	OFFSET	SIDE	ELEVATION		HMA THICK.
A	120+38.25	44.49	LT	741.03	EX	1.5"
B	120+41.16	31.71	LT	741.16		1.5"
C	120+42.07	29.92	LT	741.17		1.7"
D	120+43.42	27.64	LT	741.19		2.0"
E	120+44.95	25.43	LT	741.20		2.2"
F	120+62.66	13.34	LT	741.39	EX	1.5"
G	120+63.32	15.88	LT	741.32	EX	
H	120+41.08	44.40	LT	740.93	EX	
I	120+41.82	44.37	LT	741.38	EX	
J	120+63.50	16.59	LT	741.66	EX	
K	120+47.75	27.53	LT	741.09		
L	120+51.75	27.42	LT	741.13		
M	120+51.86	31.41	LT	741.11		
N	120+51.68	37.76	LT	741.17	EX	
O	120+47.86	37.98	LT	741.12	EX	
P	120+47.86	31.52	LT	741.07		
Q	120+45.14	31.60	LT	741.06		

STRUCTURE #17
STA. 119+88.61, 19.23' LT
EXIST. MANHOLE TO BE ADJUSTED
PROP. TYPE 8 GRATE
EXIST. RIM ELEV. = 741.43
PROP. RIM ELEV. = 741.10
UNSURE OF E ORIGIN
UNSURE OF N ENDPOINT

STRUCTURE #18
STA. 120+02.58, 21.96' LT
EXIST. INLET TO BE ADJUSTED
EXIST. RIM ELEV. = 741.03
PROP. RIM ELEV. = 741.12

0 5 10 15
SCALE IN FEET

GENERAL NOTES:

1. REFER TO ADA CURB RAMP PAVEMENT REMOVAL & REPLACEMENT DETAIL (SHEET 70).
2. CONTRACTOR SHALL VERIFY EXISTING FIELD CONDITIONS PRIOR TO THE CONSTRUCTION OF ANY RAMP OR SIDEWALK. ANY ADJUSTMENTS NECESSARY TO MEET EXISTING FIELD CONDITIONS SHALL BE APPROVED BY THE ENGINEER PRIOR TO CONSTRUCTION.
3. PROPOSED PAVEMENT MARKINGS ARE PROVIDED FOR INFORMATION ONLY. SEE PROPOSED PAVEMENT MARKING PLAN (SHEETS 55 AND 56).
4. FLOW LINE ELEVATION PERPENDICULAR TO CURB IS 0.04' LOWER THAN BACK OF CURB. SEE STANDARD 606001.
5. AT DEPRESSED CURBS ADJACENT TO CURB RAMPS ACCESSIBLE TO THE DISABLED, THE PERPENDICULAR GUTTER FLAG SLOPE SHALL BE -5.0% UNLESS NOTED OTHERWISE.
6. LIMITS OF VAR. DEPTH H.M.A. TO BE COORDINATED WITH ENGINEER TO ACHIEVE 5.0% MAX. CROSSWALK RUNNING SLOPE, 5.0% MAX. COUNTERSLOPE, AND 2.0% MAX CROSSWALK CROSS SLOPE.
7. TOOLED JOINTS NOT SHOWN. TOOLED JOINTS SHOULD BE CONSTRUCTED IN ACCORDANCE WITH SECTION 424 OF THE STANDARD SPECS AND AS DIRECTED BY THE ENGINEER.

LEGEND:

LIMITS OF VARYING H.M.A. THICKNESS (SEE CHART FOR THICKNESS - THICKNESS IS FROM TOP OF PROPOSED TO MILLED SURFACE)

DETECTABLE WARNINGS

PROPOSED TURNING SPACE

( ) EXISTING ELEVATION / SLOPE

DRAINAGE NOTES:

1. INLET RIM ELEVATION IS LOCATED AT GUTTER FLOWLINE.
2. TYPE 8 GRATE RIM ELEVATION IS LOCATED AT TOP OF GRATE.

MODEL: Randolph West ADA Detail [Sheet]
FILE NAME: F:\Projects\30 DOT\50_155A 23_PTB_207_040_Heyworth ADA (Sub to Willett Hofman)\Workfile\Sheets\D570G11-sht-ADA Randolph West.dgn

HERMANN & Associates, LLC
Civil Engineers

USER NAME = jusliin	DESIGNED - CRM	REVISED -	
	DRAWN - AMH	REVISED -	
PLOT SCALE = 0.16666633 ' / in.	CHECKED - JSW	REVISED -	
PLOT DATE = 3/18/2024	DATE -	REVISED -	

STATE OF ILLINOIS
DEPARTMENT OF TRANSPORTATION

ADA DETAIL - RANDOLPH WEST
OLD US 51 / VINE ST.

SCALE: 1"=5' | SHEET OF 14 SHEETS | STA. TO STA.

F.A. RTE.	SECTION	COUNTY	TOTAL SHEETS	SHEET NO.
*	(55/56)RS-5,57-1(1)RS-1	MCLEAN	85	53

CONTRACT NO. 70G11
ILLINOIS | FED. AID PROJECT

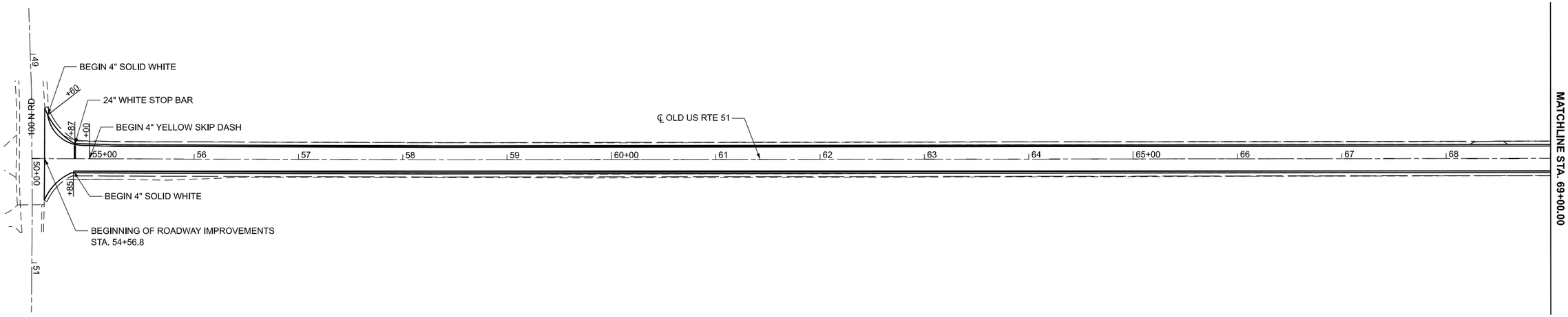

SEE DISTRICT 5 DETAIL NO. 7800AAAA FOR ADDITIONAL INFORMATION
SEE SCHEDULE OF QUANTITIES FOR ADDITIONAL STATIONING INFORMATION

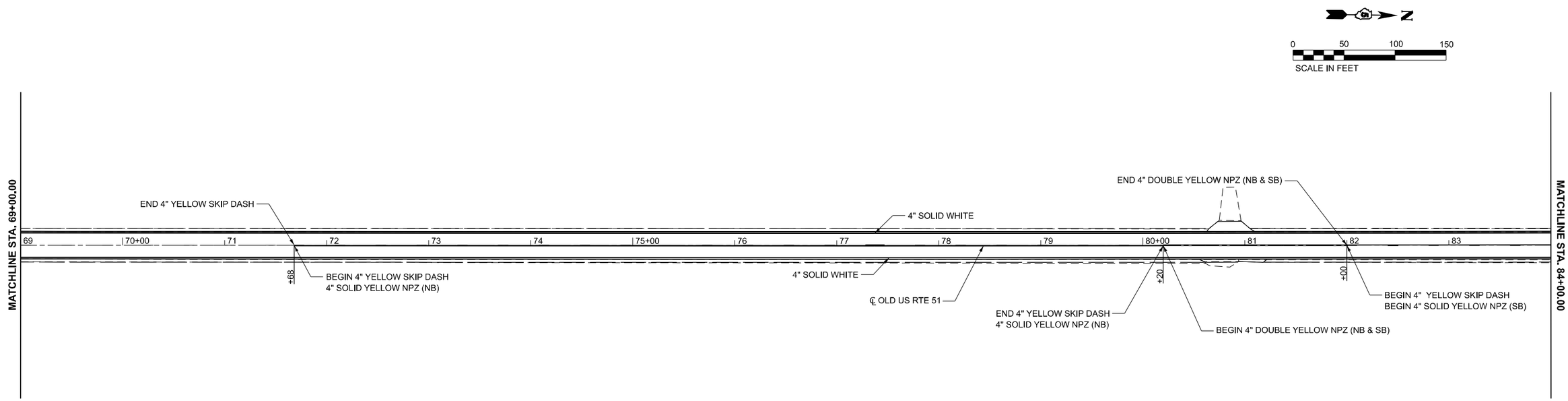

MODEL: Border
FILE NAME: S:\PROJECTS\2023\1371D23_IDOT D5\WO 1 Contract 70G11\DESIGN_70G11\CAD_Sheets\WHAD570G11_Border.dgn

WILLETT HOFMANN & ASSOCIATES INC
PROFESSIONAL DESIGN FIRM 184.000587
801 EAST 200 ST SUITE, O'FALLON, IL 62269-4587
T 618 624 3381 DESIGN FIRM: 184 000919

USER NAME = afull	DESIGNED - AMF	REVISED -	
	DRAWN - TJA	REVISED -	
PLOT SCALE = 0.16666633 ' / in.	CHECKED - GFS	REVISED -	
PLOT DATE = 3/5/2024	DATE -	REVISED -	

STATE OF ILLINOIS
DEPARTMENT OF TRANSPORTATION

PAVEMENT MARKING PLAN

SCALE: 1"=50' | SHEET 1 OF 14 SHEETS | STA. 54+56.79 TO STA. 84+00.00

F.A. RTE.	SECTION	COUNTY	TOTAL SHEETS	SHEET NO.
*	(55/56)RS-5,57-1(1)RS-1	MCLEAN	85	54
		CONTRACT NO. 70G11		
	ILLINOIS	FED. AID PROJECT		

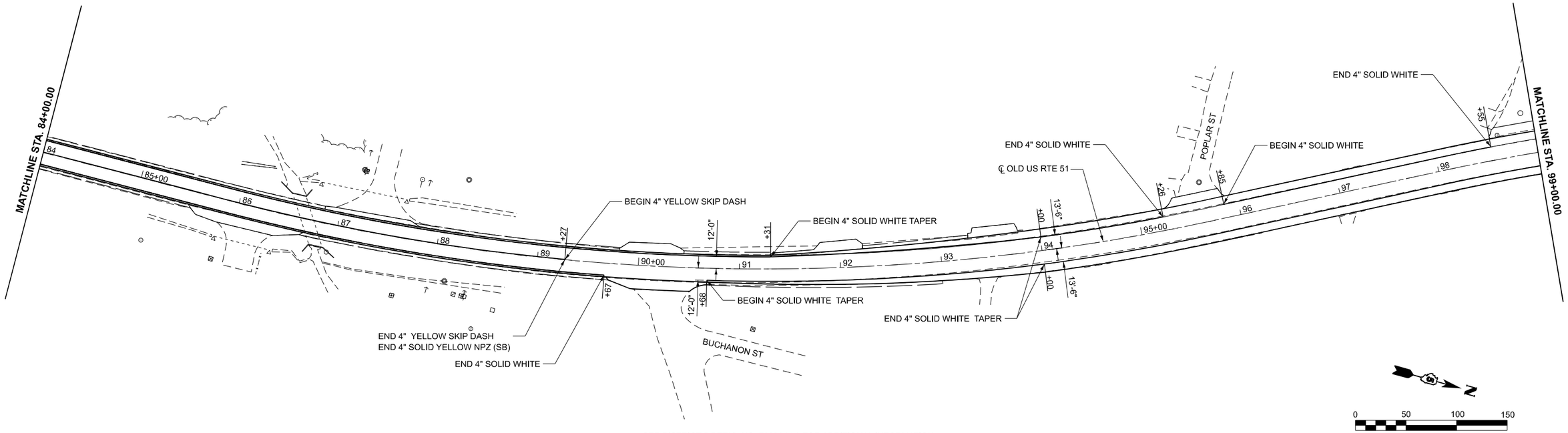

SEE DISTRICT 5 DETAIL NO. 7800AAAA FOR ADDITIONAL INFORMATION
SEE SCHEDULE OF QUANTITIES FOR ADDITIONAL STATIONING INFORMATION

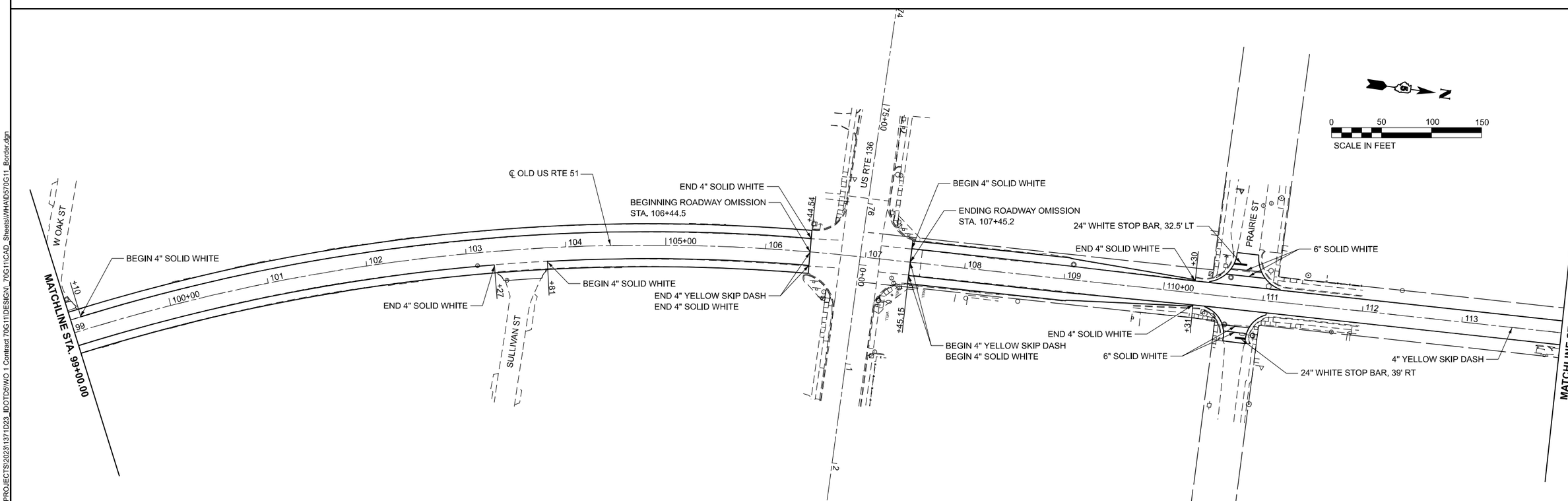

MODEL: Border
FILE NAME: S:\PROJECTS\2023\1371D23_IDOTD5\WO 1 Contract 70G11\DESIGN_70G11\CAD_Sheets\WHAD570G11_Border.dgn

WILLETT HOFMANN & ASSOCIATES INC
ENGINEERING ARCHITECTURE LANDSCAPE ARCHITECTURE
801 EAST DIVISION STREET, DIXON, IL (815) 284-3387
P. 815 284 3381 DESIGN FIRM: # 184.000919

USER NAME = afull	DESIGNED - AMF	REVISED -	
	DRAWN - TJA	REVISED -	
PLOT SCALE = 0.16666633 ' / in.	CHECKED - GFS	REVISED -	
PLOT DATE = 3/5/2024	DATE -	REVISED -	

STATE OF ILLINOIS
DEPARTMENT OF TRANSPORTATION

PAVEMENT MARKING PLANS

SCALE: 1"=50' | SHEET 2 OF 14 SHEETS | STA. 84+00.00 TO STA. 114+00.00

F.A. RTE.	SECTION	COUNTY	TOTAL SHEETS	SHEET NO.
*	(55/56)RS-5,57-1(1)RS-1	MCLEAN	85	55
		CONTRACT NO. 70G11		
	ILLINOIS	FED. AID PROJECT		

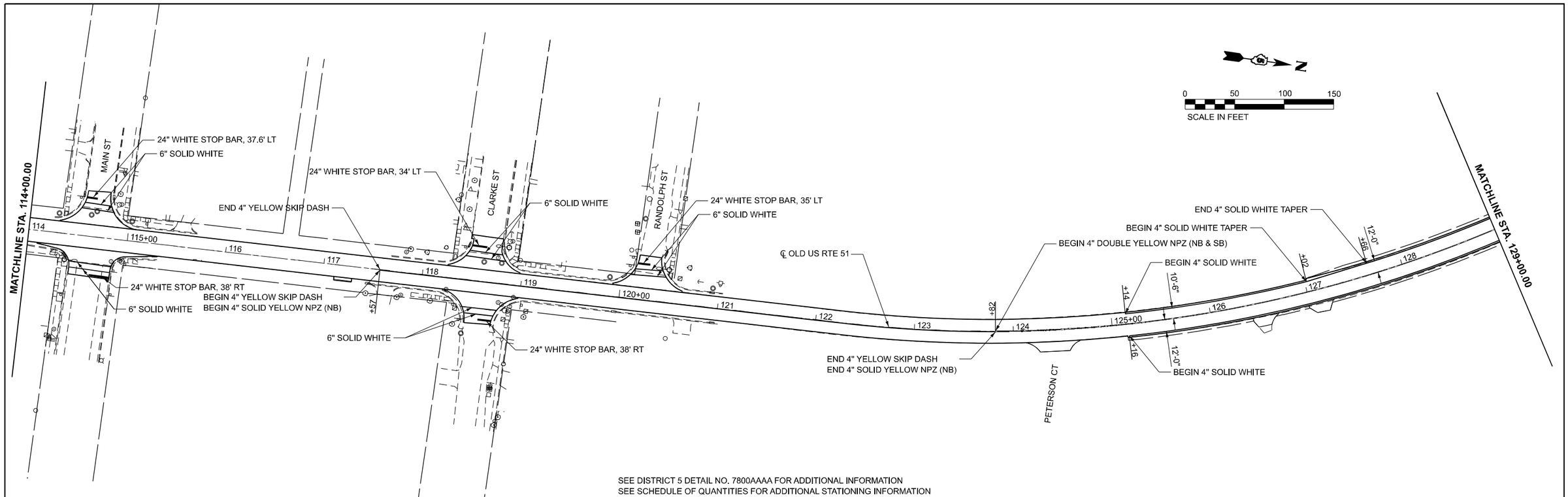

SEE DISTRICT 5 DETAIL NO. 7800AAAA FOR ADDITIONAL INFORMATION
SEE SCHEDULE OF QUANTITIES FOR ADDITIONAL STATIONING INFORMATION

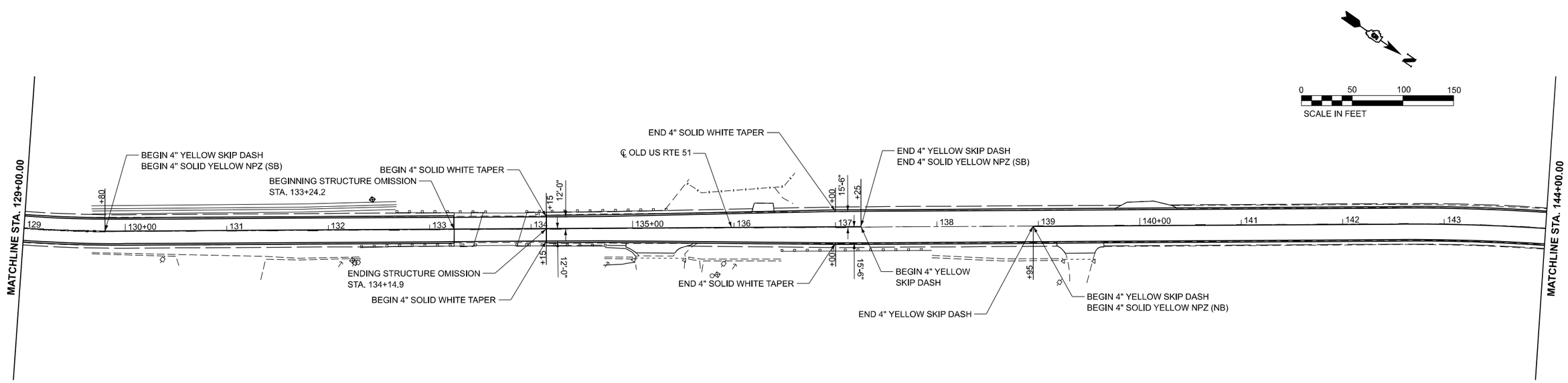

MODEL: Border
FILE NAME: S:\PROJECTS\2023\1371D23_IDOT D5\WO 1 Contract 70G11\DESIGN_70G11\CAD_Sheets\WHA\D570G11_Border.dgn

WILLETT HOFMANN & ASSOCIATES, INC.
PROFESSIONAL ENGINEERS AND LAND SURVEYORS
809 EAST 2ND STREET, DIXON, IL 61021-0367
T: 815 284 3081 DESIGN@WHA-E.COM 815 960 9910

USER NAME = afull	DESIGNED - AMF	REVISED -	
	DRAWN - TJA	REVISED -	
PLOT SCALE = 0.16666633 ' / in.	CHECKED - GFS	REVISED -	
PLOT DATE = 3/5/2024	DATE -	REVISED -	

STATE OF ILLINOIS
DEPARTMENT OF TRANSPORTATION

PAVEMENT MARKING PLANS

SCALE: 1"=50' | SHEET 3 OF 14 SHEETS | STA. 114+00.00 R3 TO STA. 144+00.00

F.A. RTE.	SECTION	COUNTY	TOTAL SHEETS	SHEET NO.
*	(55/56)RS-5,57-1(1)RS-1	MCLEAN	85	56
		CONTRACT NO. 70G11		
	ILLINOIS	FED. AID PROJECT		

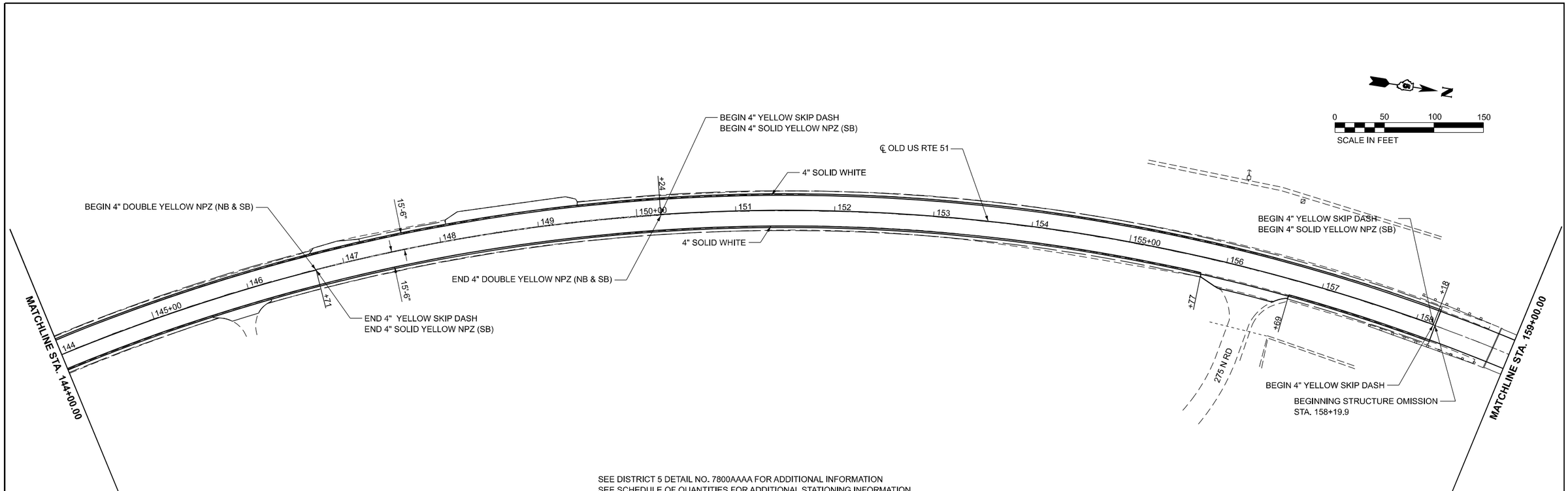

SEE DISTRICT 5 DETAIL NO. 7800AAAA FOR ADDITIONAL INFORMATION
SEE SCHEDULE OF QUANTITIES FOR ADDITIONAL STATIONING INFORMATION

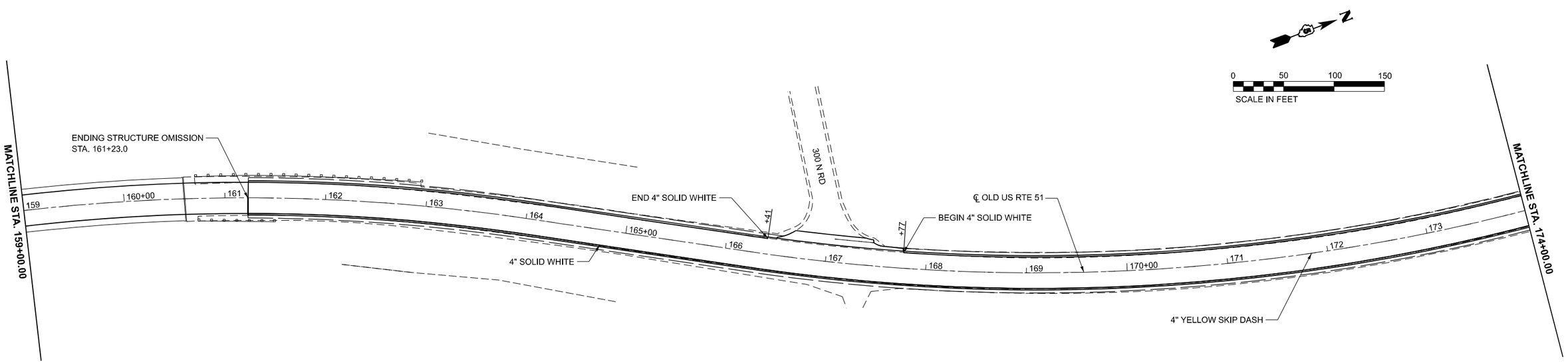

MODEL: Border
FILE NAME: S:\PROJECTS\2023\1371D23_IDOT D5\WO 1 Contract 70G11\DESIGN_70G11\CAD_Sheets\WHA\D570G11_Border.dgn

WILLETT HOFMANN & ASSOCIATES, INC.
PROFESSIONAL ENGINEERS AND LAND SURVEYORS
809 EAST 200 STREET, DANVILLE, ILLINOIS 61832-5667
TEL 217-446-0500 FAX 217-446-0503

USER NAME = afull	DESIGNED - AMF	REVISED -	
	DRAWN - TJA	REVISED -	
PLOT SCALE = 0.16666633 ' / in.	CHECKED - GFS	REVISED -	
PLOT DATE = 3/5/2024	DATE -	REVISED -	

STATE OF ILLINOIS
DEPARTMENT OF TRANSPORTATION

PAVEMENT MARKING PLANS

SCALE: 1"=50' | SHEET 4 OF 14 SHEETS | STA. 144+00.00 TO STA. 174+00.00

F.A. RTE.	SECTION	COUNTY	TOTAL SHEETS	SHEET NO.
*	(55/56)RS-5,57-1(1)RS-1	MCLEAN	85	57
		CONTRACT NO. 70G11		
	ILLINOIS	FED. AID PROJECT		

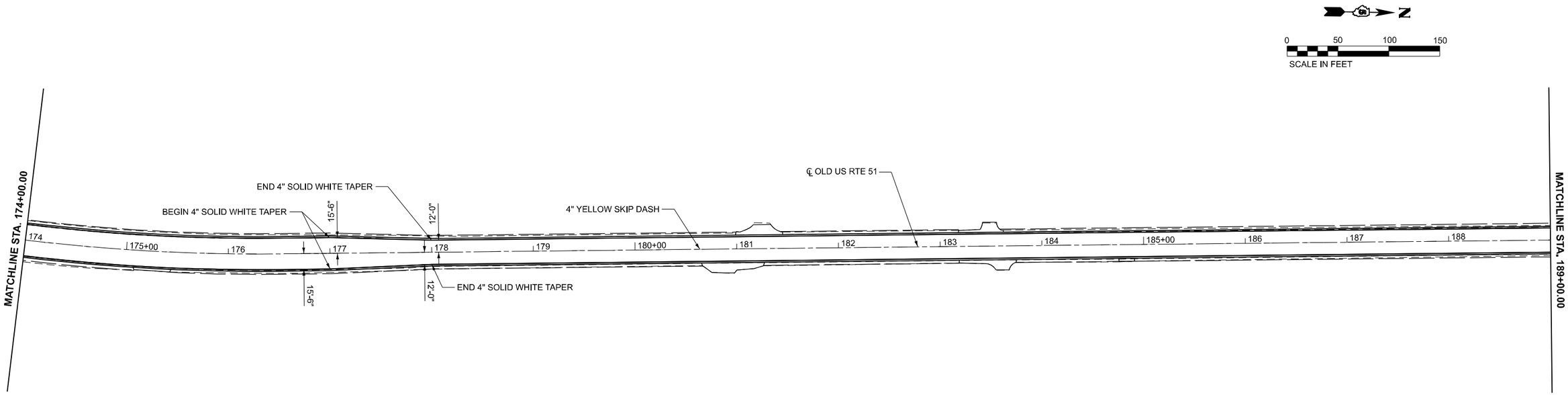

SEE DISTRICT 5 DETAIL NO. 7800AAAA FOR ADDITIONAL INFORMATION
SEE SCHEDULE OF QUANTITIES FOR ADDITIONAL STATIONING INFORMATION

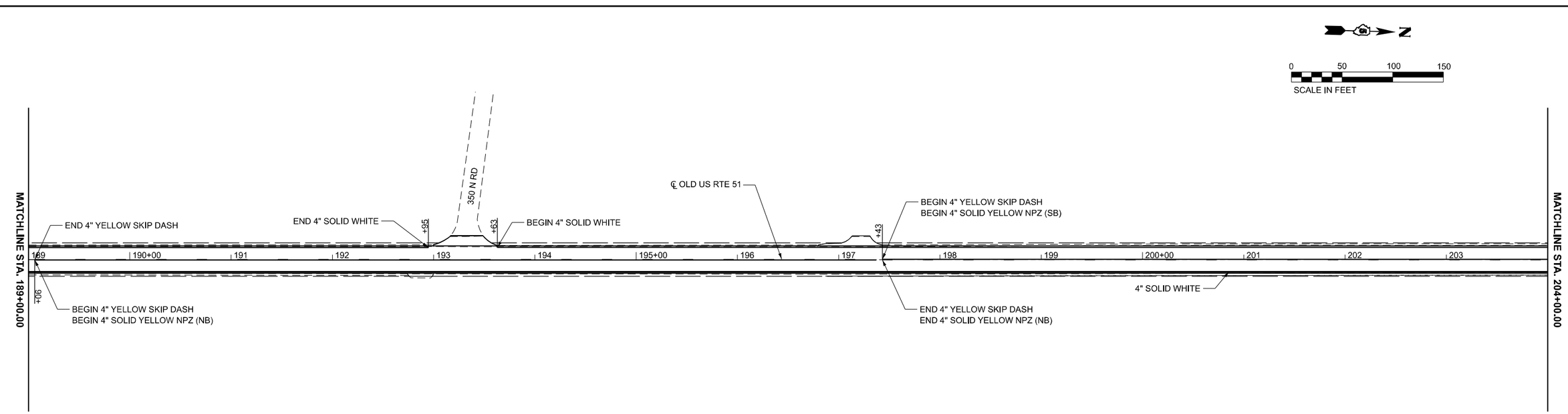

MODEL: Border
FILE NAME: S:\PROJECTS\2023\1371D23_IDOTD5\WO 1 Contract 70G11\DESIGN_70G11\CAD_Sheets\WHAID570G11_Border.dgn

WILLETT HOFMANN & ASSOCIATES INC
ENGINEERING ARCHITECTURE LANDSCAPE ARCHITECTURE
801 EAST 2ND STREET, DIXON, IL (815) 284-3287
T 815 284 3381 DESIGNFIRM: # 184 000919

USER NAME = afull	DESIGNED - AMF	REVISED -	
	DRAWN - TJA	REVISED -	
PLOT SCALE = 0.16666633 ' / in.	CHECKED - GFS	REVISED -	
PLOT DATE = 3/5/2024	DATE -	REVISED -	

STATE OF ILLINOIS
DEPARTMENT OF TRANSPORTATION

PAVEMENT MARKING PLANS

SCALE: 1"=50' | SHEET 5 OF 14 SHEETS | STA. 174+00.00 TO STA. 204+00.00

F.A. RTE.	SECTION	COUNTY	TOTAL SHEETS	SHEET NO.
*	(55/56)RS-5,57-1(1)RS-1	MCLEAN	85	58
		CONTRACT NO. 70G11		
	ILLINOIS	FED. AID PROJECT		

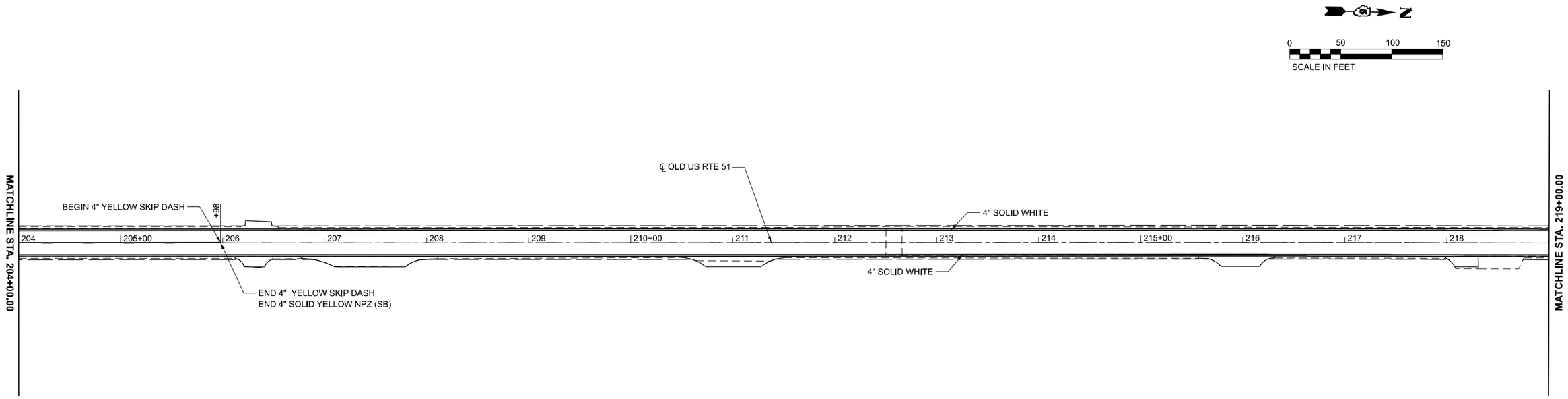

SEE DISTRICT 5 DETAIL NO. 7800AAAA FOR ADDITIONAL INFORMATION
SEE SCHEDULE OF QUANTITIES FOR ADDITIONAL STATIONING INFORMATION

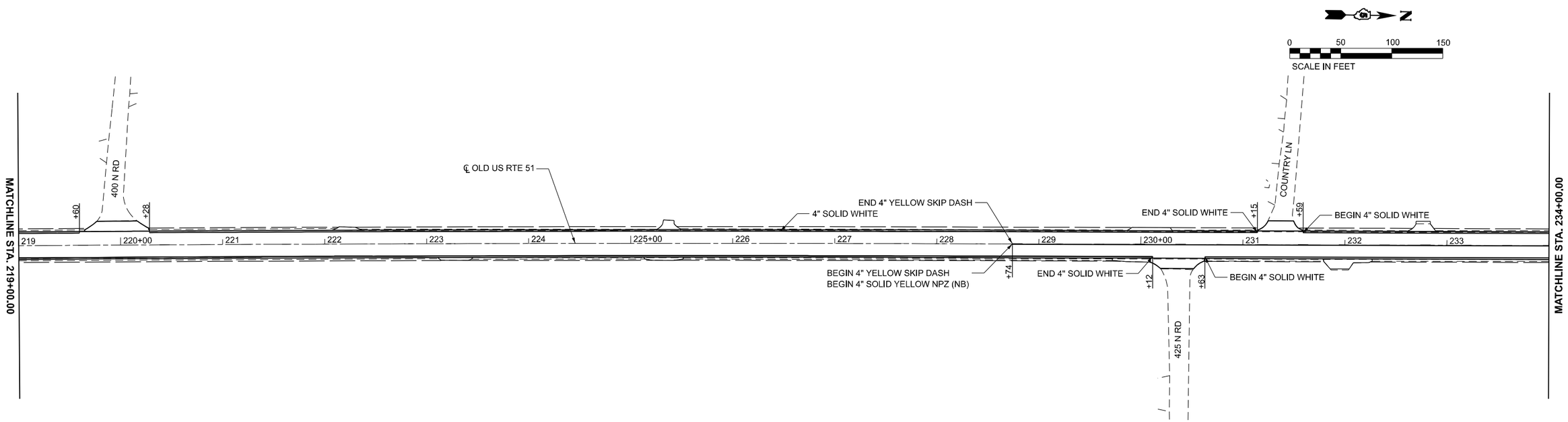

MODEL: Border
FILE NAME: S:\PROJECTS\2023\1371D23_IDOTD5\WO 1 Contract 70G11\DESIGN_70G11\CAD_Sheets\WHA\D570G11_Border.dgn

WILLETT HOFMANN & ASSOCIATES, INC.
PROFESSIONAL ENGINEERS AND LAND SURVEYORS
809 EAST 2ND STREET, DIXON, IL 61021-0367
T: 815 284 3381 DESIGN FIRM: # 184-000918

USER NAME = afull	DESIGNED - AMF	REVISED -	
	DRAWN - TJA	REVISED -	
PLOT SCALE = 0.16666633 ' / in.	CHECKED - GFS	REVISED -	
PLOT DATE = 3/5/2024	DATE -	REVISED -	

STATE OF ILLINOIS
DEPARTMENT OF TRANSPORTATION

PAVEMENT MARKING PLANS

SCALE: 1"=50' | SHEET 6 OF 14 SHEETS | STA. 204+00.00 TO STA. 234+00.00

F.A. RTE.	SECTION	COUNTY	TOTAL SHEETS	SHEET NO.
*	(55/56)RS-5,57-1(1)RS-1	MCLEAN	85	59
		CONTRACT NO. 70G11		
	ILLINOIS	FED. AID PROJECT		

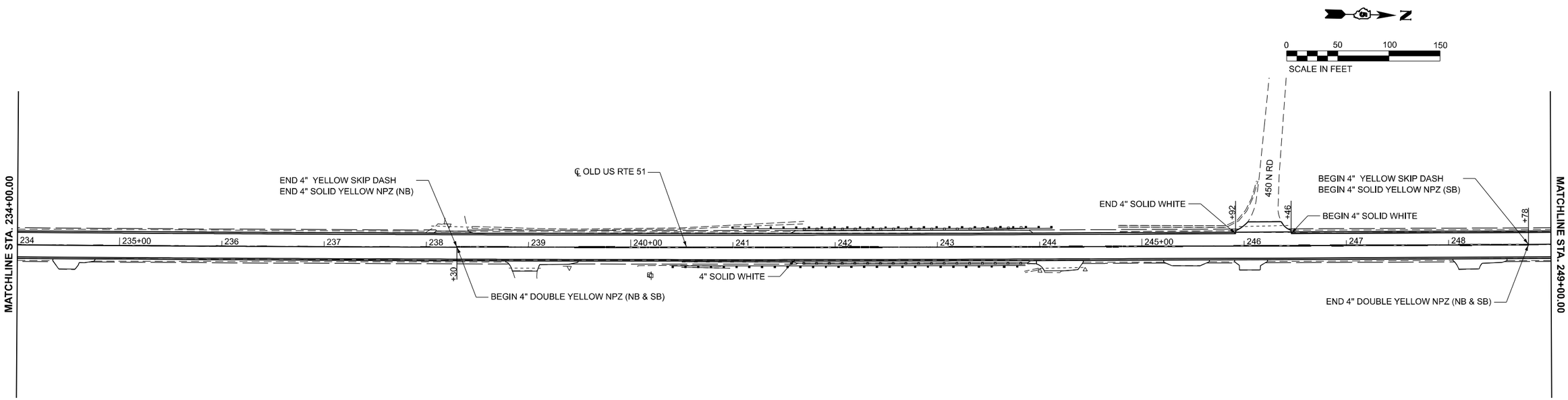

SEE DISTRICT 5 DETAIL NO. 7800AAAA FOR ADDITIONAL INFORMATION
SEE SCHEDULE OF QUANTITIES FOR ADDITIONAL STATIONING INFORMATION

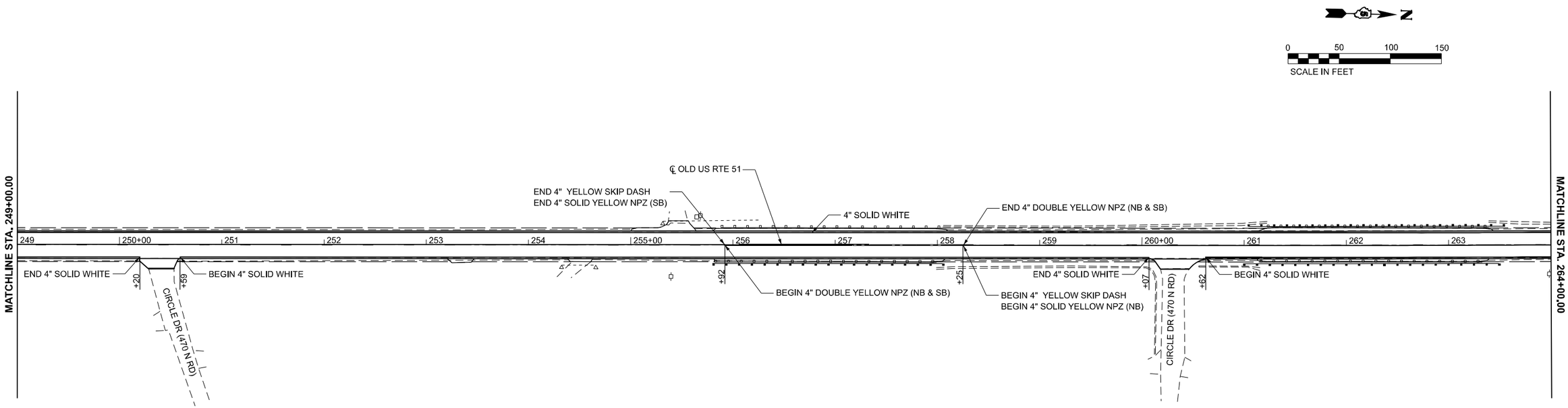

MODEL: Border
FILE NAME: S:\PROJECTS\2023\1371023_IDOT D5\WO 1 Contract 70G11\DESIGN_70G11\CAD_Sheets\WHA\D570G11_Border.dgn

WILLETT HOFMANN & ASSOCIATES INC
PROFESSIONAL ENGINEERS AND LAND SURVEYORS
809 EAST 2ND STREET, DIXON, IL 61021-0367
T: 815-284-3081 FAX: 815-284-3033

USER NAME = afull	DESIGNED - AMF	REVISED -	
	DRAWN - TJA	REVISED -	
PLOT SCALE = 0.16666633 ' / in.	CHECKED - GFS	REVISED -	
PLOT DATE = 3/5/2024	DATE -	REVISED -	

STATE OF ILLINOIS
DEPARTMENT OF TRANSPORTATION

PAVEMENT MARKING PLANS

SCALE: 1"=50' | SHEET 7 OF 14 SHEETS | STA. 234+00.00 TO STA. 264+00.00

F.A. RTE.	SECTION	COUNTY	TOTAL SHEETS	SHEET NO.
*	(55/56)RS-5,57-1(1)RS-1	MCLEAN	85	60
		CONTRACT NO. 70G11		
	ILLINOIS	FED. AID PROJECT		

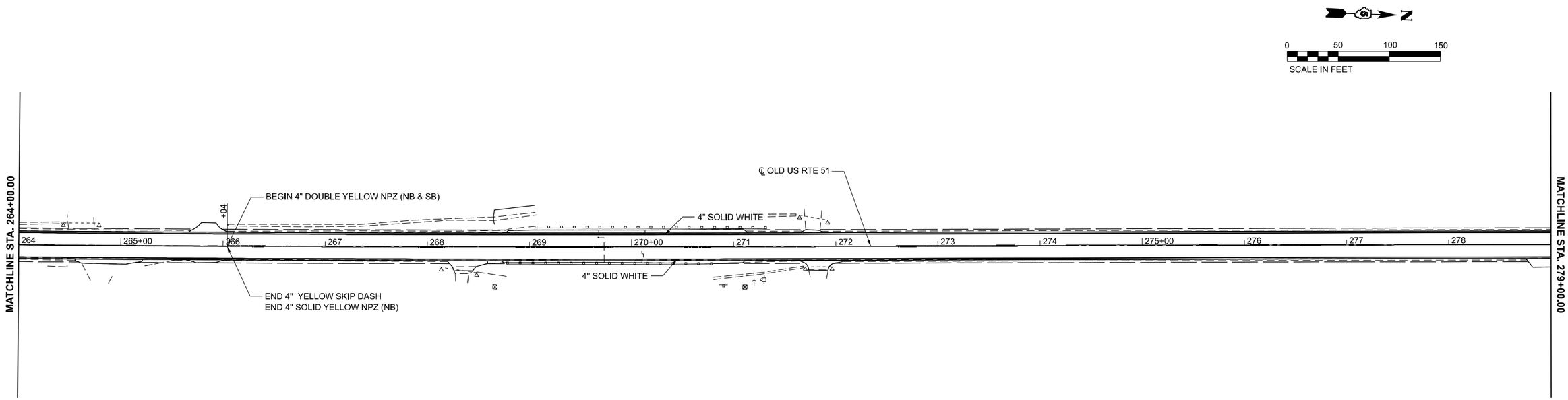

SEE DISTRICT 5 DETAIL NO. 7800AAAA FOR ADDITIONAL INFORMATION
SEE SCHEDULE OF QUANTITIES FOR ADDITIONAL STATIONING INFORMATION

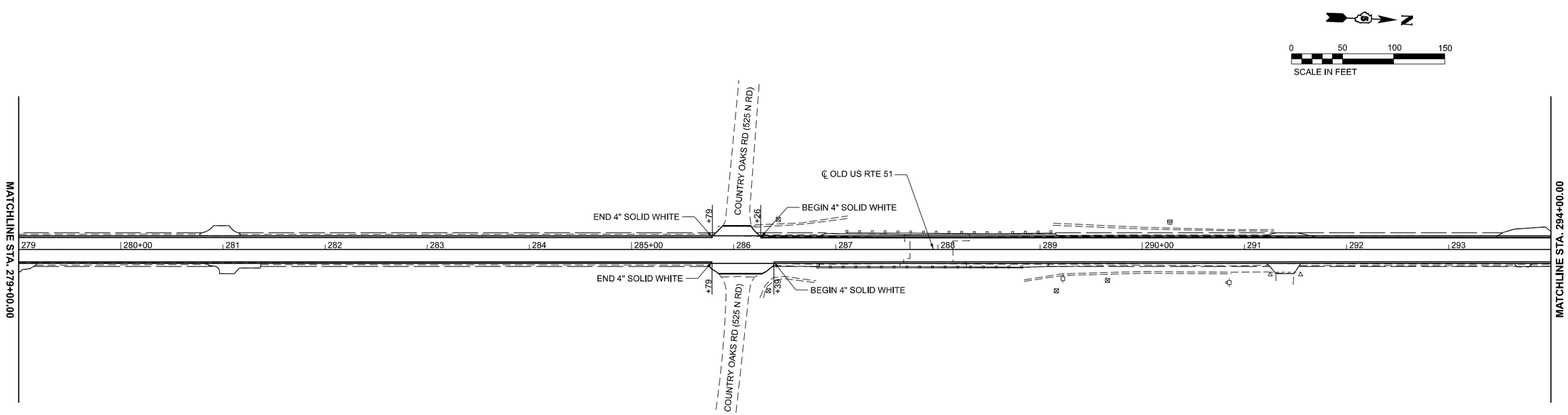

MODEL: Border
FILE NAME: S:\PROJECTS\2023\1371D23_IDOTD5\WO 1 Contract 70G11\DESIGN_70G11\CAD_Sheets\WHA\D570G11_Border.dgn

WILLETT HOFMANN & ASSOCIATES INC
PROFESSIONAL DESIGN FIRM 184-000918
809 EAST 2ND STREET, DIXON, IL 61021-0367
T: 815 284 3381 FAX: 815 284 3399

USER NAME = afull	DESIGNED - AMF	REVISED -	
	DRAWN - TJA	REVISED -	
PLOT SCALE = 0.16666633 ' / in.	CHECKED - GFS	REVISED -	
PLOT DATE = 3/5/2024	DATE -	REVISED -	

STATE OF ILLINOIS
DEPARTMENT OF TRANSPORTATION

PAVEMENT MARKING PLANS

SCALE: 1"=50' | SHEET 8 OF 14 SHEETS | STA. 264+00.00 TO STA. 294+00.00

F.A. RTE.	SECTION	COUNTY	TOTAL SHEETS	SHEET NO.
*	(55/56)RS-5,57-1(1)RS-1	MCLEAN	85	61
		CONTRACT NO. 70G11		
	ILLINOIS	FED. AID PROJECT		

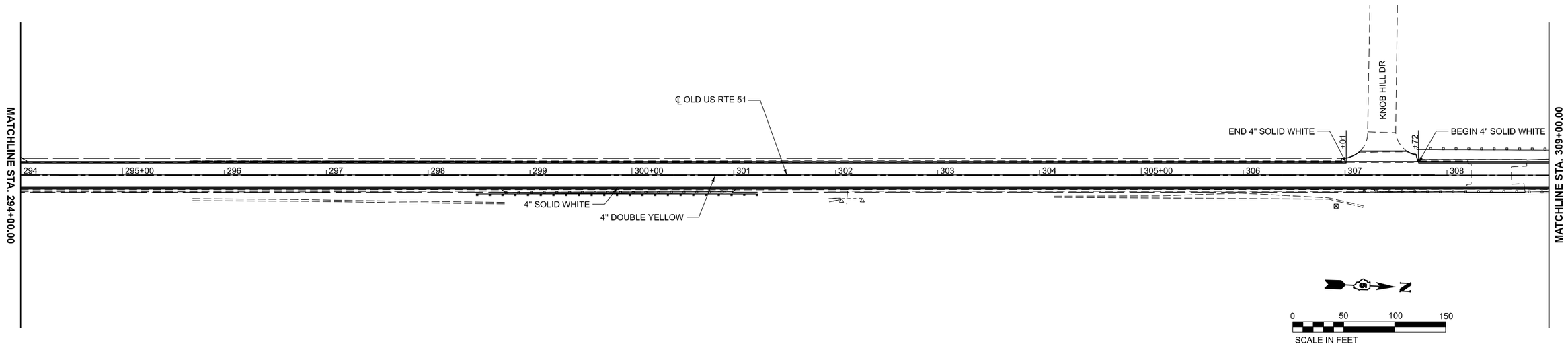

SEE DISTRICT 5 DETAIL NO. 7800AAAA FOR ADDITIONAL INFORMATION
SEE SCHEDULE OF QUANTITIES FOR ADDITIONAL STATIONING INFORMATION

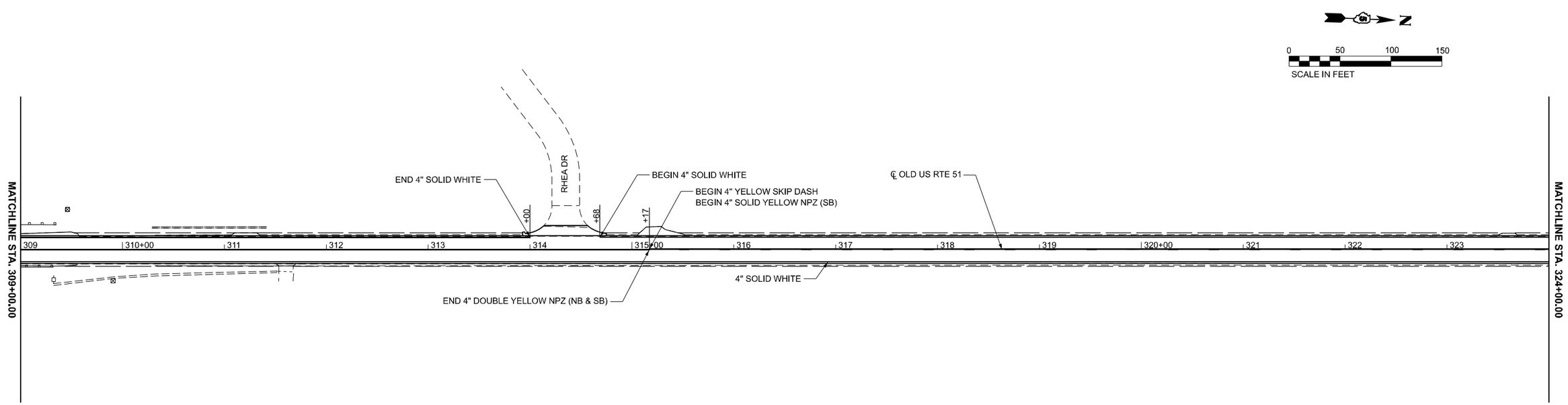

MODEL: Border
FILE NAME: S:\PROJECTS\2023\1371D23_IDOTD5\WO 1 Contract 70G11\DESIGN_70G11\CAD_Sheets\WHA\D570G11_Border.dgn

WILLETT HOFMANN & ASSOCIATES, INC.
PROFESSIONAL ENGINEERS, LAND SURVEYORS
809 EAST 2ND STREET, DIXON, IL 61021-0367
T: 815 284 3381 FAX: CONTRACT: F: 815 900 0918

USER NAME = afull	DESIGNED - AMF	REVISED -	
	DRAWN - TJA	REVISED -	
PLOT SCALE = 0.16666633 ' / in.	CHECKED - GFS	REVISED -	
PLOT DATE = 3/5/2024	DATE -	REVISED -	

STATE OF ILLINOIS
DEPARTMENT OF TRANSPORTATION

PAVEMENT MARKING PLANS

SCALE: 1"=50' | SHEET 9 OF 14 SHEETS | STA. 294+00.00 TO STA. 324+00.00

F.A. RTE.	SECTION	COUNTY	TOTAL SHEETS	SHEET NO.
*	(55/56)RS-5,57-1(1)RS-1	MCLEAN	85	62
		CONTRACT NO. 70G11		
	ILLINOIS	FED. AID PROJECT		

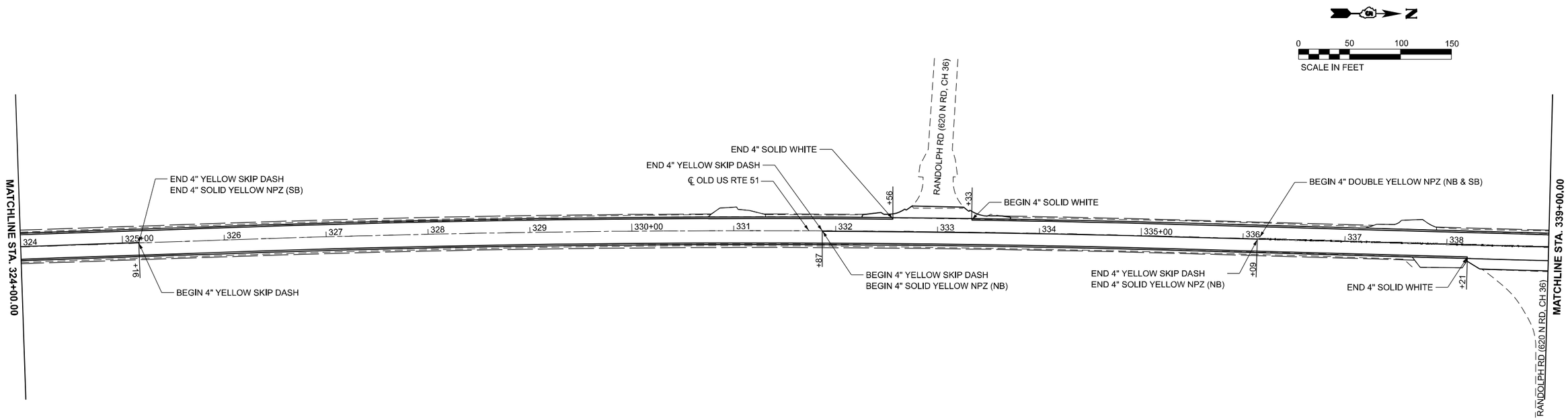

SEE DISTRICT 5 DETAIL NO. 7800AAAA FOR ADDITIONAL INFORMATION
SEE SCHEDULE OF QUANTITIES FOR ADDITIONAL STATIONING INFORMATION

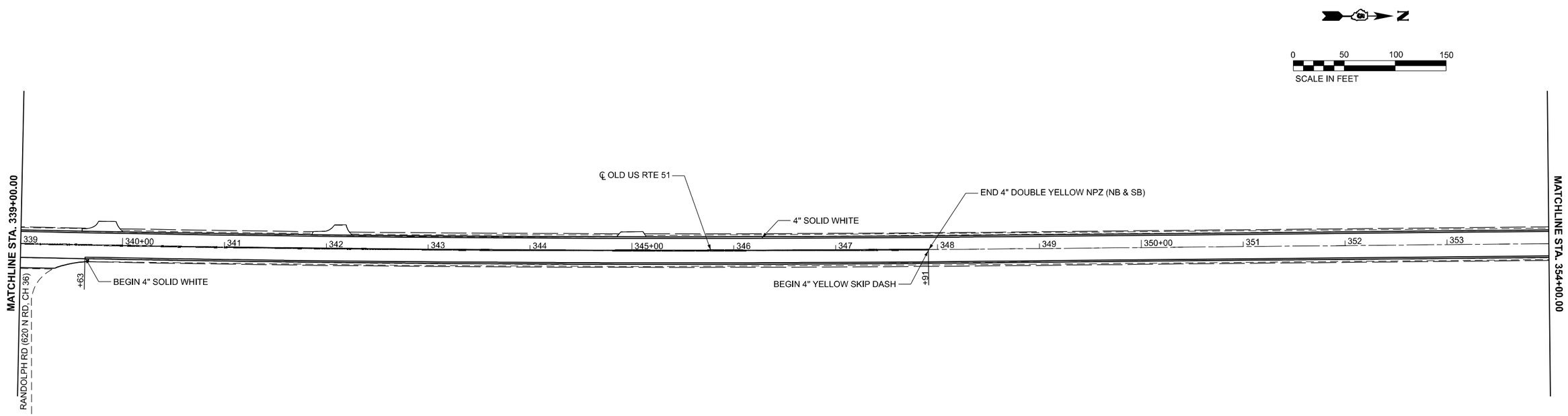

MODEL: Border
FILE NAME: S:\PROJECTS\2023\1371D23_IDOTD5\WO 1 Contract 70G11\DESIGN_70G11\CAD_Sheets\WHA\D570G11_Border.dgn

WILLETT HOFMANN & ASSOCIATES, INC.
PROFESSIONAL DESIGN FIRM 184-000818
809 EAST 2ND STREET, DIXON, IL 61021-0367
T: 815 284 3381 DESIGN FIRM: 184-000818

USER NAME = afull	DESIGNED - AMF	REVISED -	
	DRAWN - TJA	REVISED -	
PLOT SCALE = 0.16666633 ' / in.	CHECKED - GFS	REVISED -	
PLOT DATE = 3/5/2024	DATE -	REVISED -	

STATE OF ILLINOIS
DEPARTMENT OF TRANSPORTATION

PAVEMENT MARKINH PLANS

SCALE: 1"=50' | SHEET 10 OF 14 SHEETS | STA. 324+00.00 TO STA. 354+00.00

F.A. RTE.	SECTION	COUNTY	TOTAL SHEETS	SHEET NO.
*	(55/56)RS-5,57-1(1)RS-1	MCLEAN	85	63
		CONTRACT NO. 70G11		
	ILLINOIS	FED. AID PROJECT		

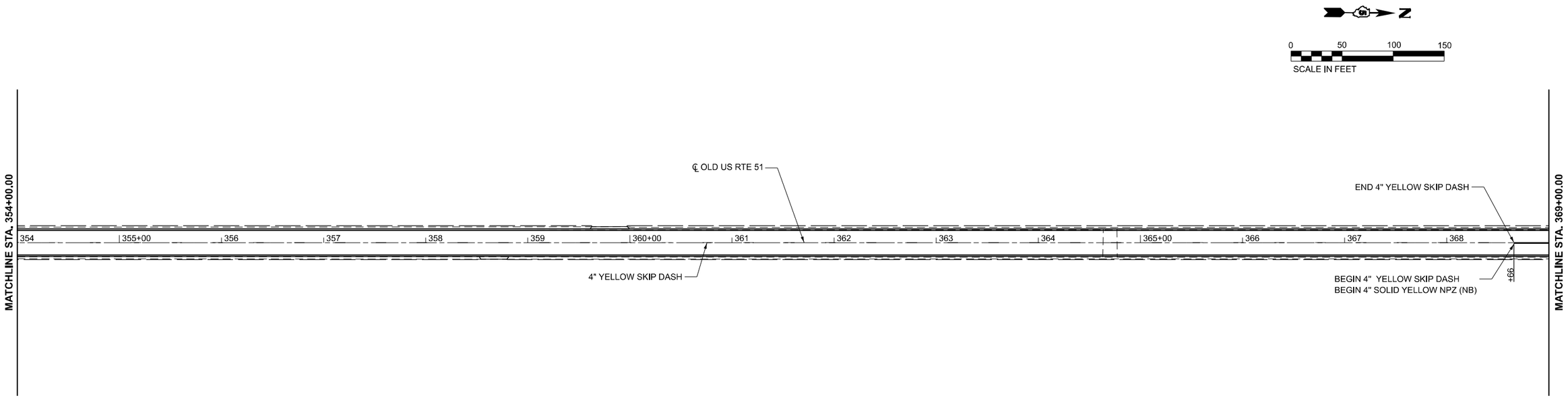

SEE DISTRICT 5 DETAIL NO. 7800AAAA FOR ADDITIONAL INFORMATION
SEE SCHEDULE OF QUANTITIES FOR ADDITIONAL STATIONING INFORMATION

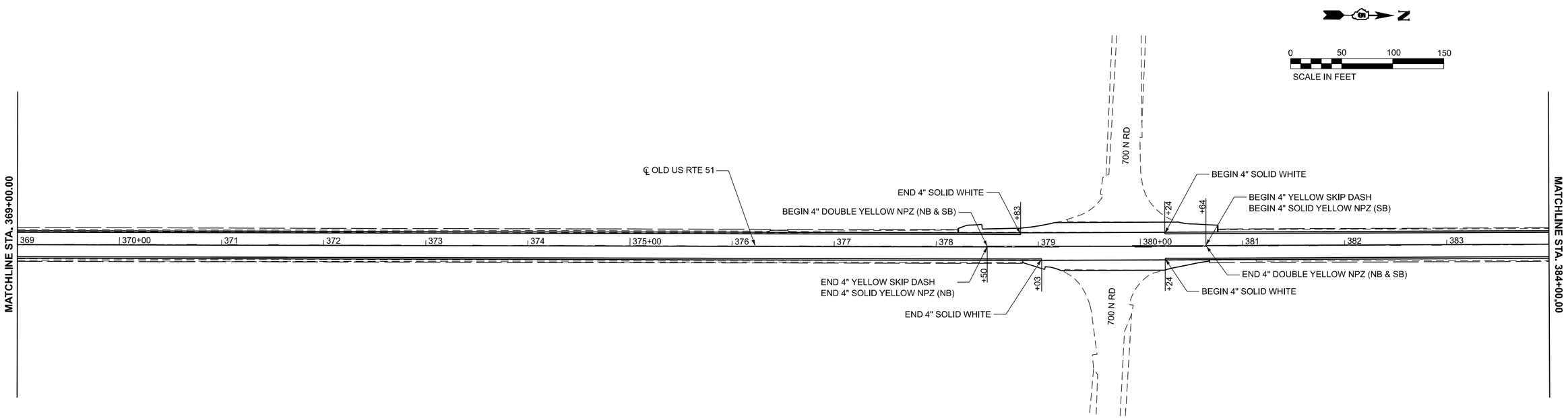

MODEL: Border
FILE NAME: S:\PROJECTS\2023\1371D23_IDOTD5\WO 1 Contract 70G11\DESIGN_70G11\CAD_Sheets\WHAID570G11_Border.dgn

WILLETT HOFMANN & ASSOCIATES, INC.
PROFESSIONAL ENGINEERS AND LAND SURVEYORS
809 EAST 290 STREET, UNION, IL 60180-9367
T: 815.284.3081 DESIGN@WHA-E.COM 815.900.0918

USER NAME = afull	DESIGNED - AMF	REVISED -	
	DRAWN - TJA	REVISED -	
PLOT SCALE = 0.16666633 ' / in.	CHECKED - GFS	REVISED -	
PLOT DATE = 3/5/2024	DATE -	REVISED -	

STATE OF ILLINOIS
DEPARTMENT OF TRANSPORTATION

PAVEMENT MARKING PLANS

SCALE: 1"=50' | SHEET 11 OF 14 SHEETS | STA. 354+00.00 R3 TO STA. 384+00.00 R3

F.A. RTE.	SECTION	COUNTY	TOTAL SHEETS	SHEET NO.
*	(55/56)RS-5,57-1(1)RS-1	MCLEAN	85	64
		CONTRACT NO. 70G11		
	ILLINOIS	FED. AID PROJECT		

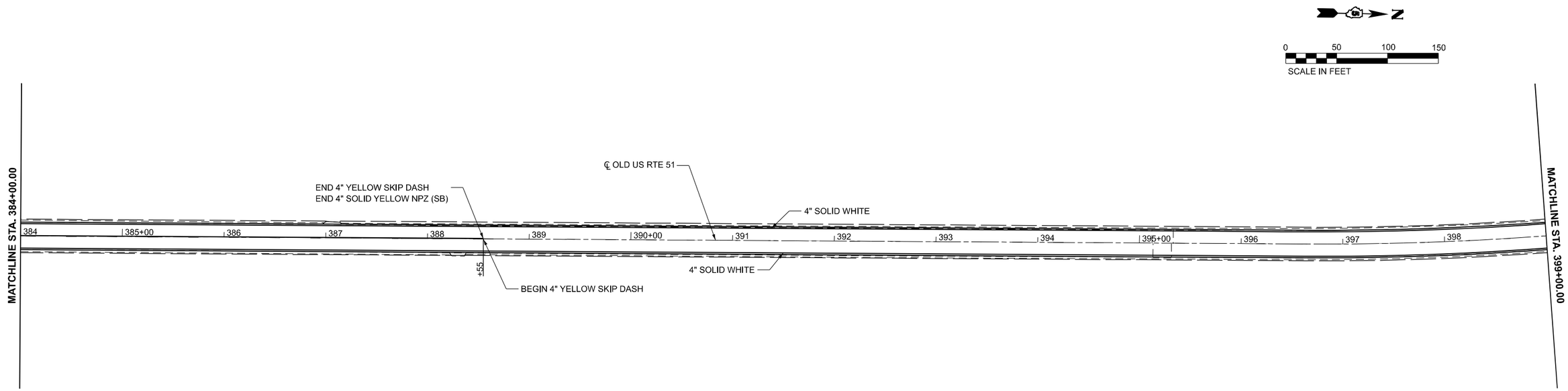

SEE DISTRICT 5 DETAIL NO. 7800AAAA FOR ADDITIONAL INFORMATION
SEE SCHEDULE OF QUANTITIES FOR ADDITIONAL STATIONING INFORMATION

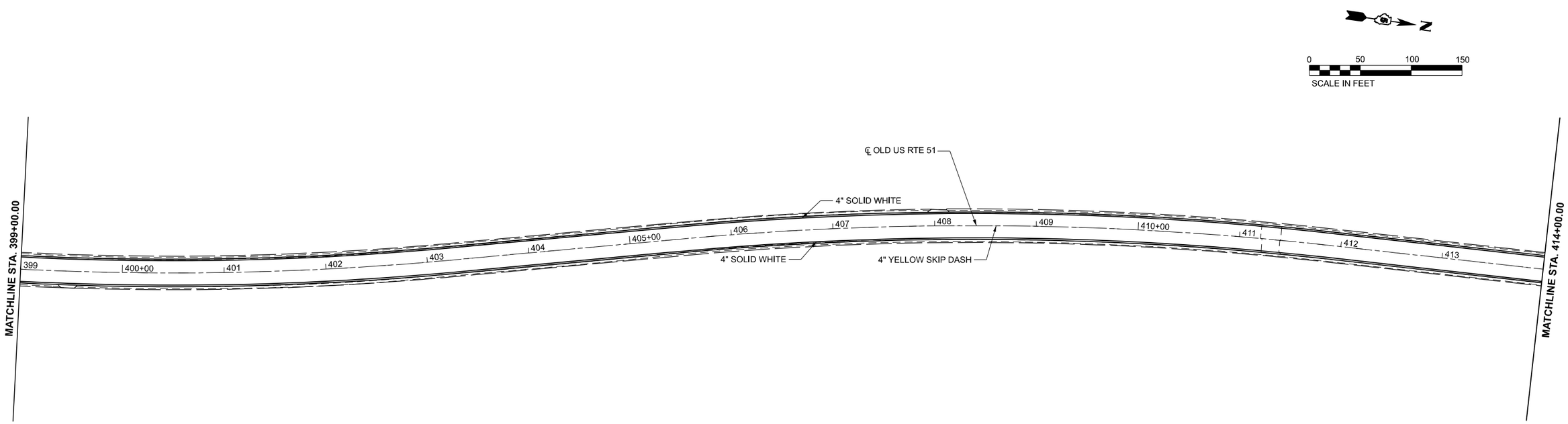

MODEL: Border
FILE NAME: S:\PROJECTS\2023\1371D23_IDOTD5\WO 1 Contract 70G11\DESIGN_70G11\CAD_Sheets\WHAID570G11_Border.dgn

WILLETT HOFMANN & ASSOCIATES, INC.
PROFESSIONAL ENGINEERS AND LAND SURVEYORS
809 EAST 2ND STREET, DIXON, IL 61021-0367
T: 815-284-3081 DESIGN FIRM: # 184-000918

USER NAME = afull	DESIGNED - AMF	REVISED -	
	DRAWN - TJA	REVISED -	
PLOT SCALE = 0.16666633 ' / in.	CHECKED - GFS	REVISED -	
PLOT DATE = 3/5/2024	DATE -	REVISED -	

STATE OF ILLINOIS
DEPARTMENT OF TRANSPORTATION

PAVEMENT MARKING PLANS

SCALE: 1"=50' | SHEET 12 OF 14 SHEETS | STA. 384+00.00 R3 TO STA. 414+00.00 R3

F.A. RTE.	SECTION	COUNTY	TOTAL SHEETS	SHEET NO.
*	(55/56)RS-5,57-1(1)RS-1	MCLEAN	85	65
		CONTRACT NO. 70G11		
	ILLINOIS	FED. AID PROJECT		

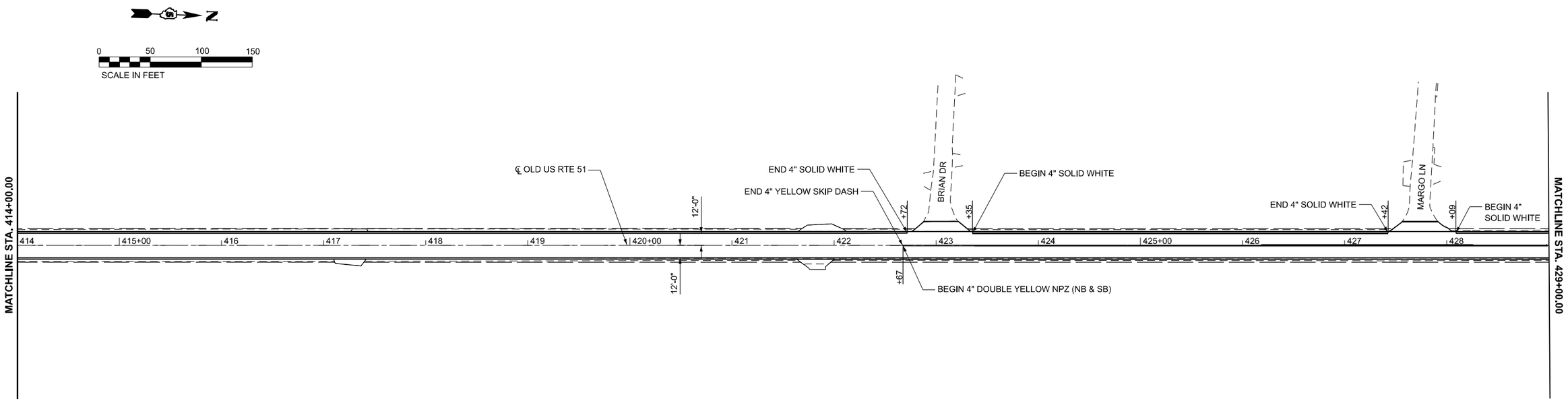

SEE DISTRICT 5 DETAIL NO. 7800AAAA FOR ADDITIONAL INFORMATION
SEE SCHEDULE OF QUANTITIES FOR ADDITIONAL STATIONING INFORMATION

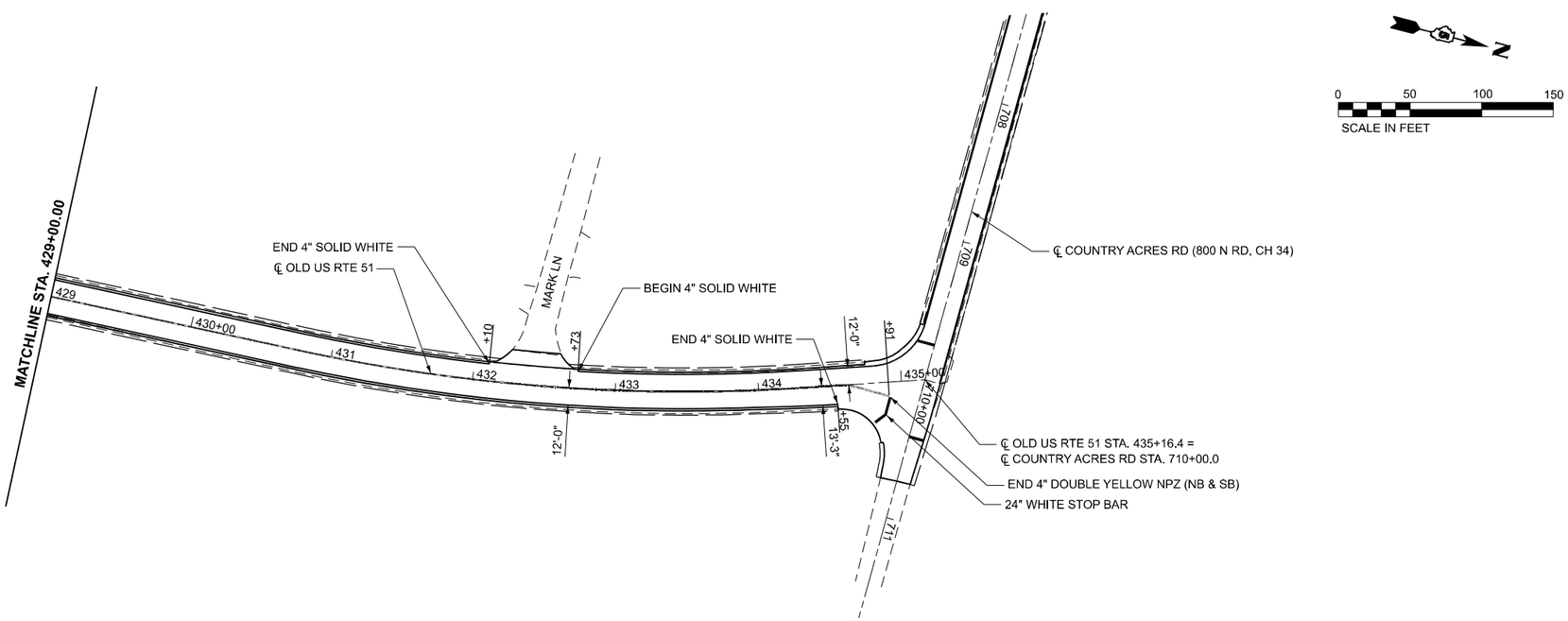

MODEL: Border
FILE NAME: S:\PROJECTS\2023\1371D23_IDOTD5\WO 1 Contract 70G11\DESIGN_70G11\CAD_Sheets\WHA\D570G11_Border.dgn

WILLETT HOFMANN & ASSOCIATES INC
PROFESSIONAL ENGINEERS AND LAND SURVEYORS
809 EAST 2ND STREET, DIXON, IL 61021-0367
T: 815 284-3381 DESIGN@WHA-E.COM 815-284-3383

USER NAME = afull	DESIGNED - AMF	REVISED -	
	DRAWN - TJA	REVISED -	
PLOT SCALE = 0.16666633 ' / in.	CHECKED - GFS	REVISED -	
PLOT DATE = 3/5/2024	DATE -	REVISED -	

STATE OF ILLINOIS
DEPARTMENT OF TRANSPORTATION

PAVEMENT MARKING PLANS

SCALE: 1"=50' | SHEET 13 OF 14 SHEETS | STA. 414+00.00 TO STA. 435+16.41

F.A. RTE.	SECTION	COUNTY	TOTAL SHEETS	SHEET NO.
*	(55/56)RS-5,57-1(1)RS-1	MCLEAN	85	66
		CONTRACT NO. 70G11		
	ILLINOIS	FED. AID PROJECT		

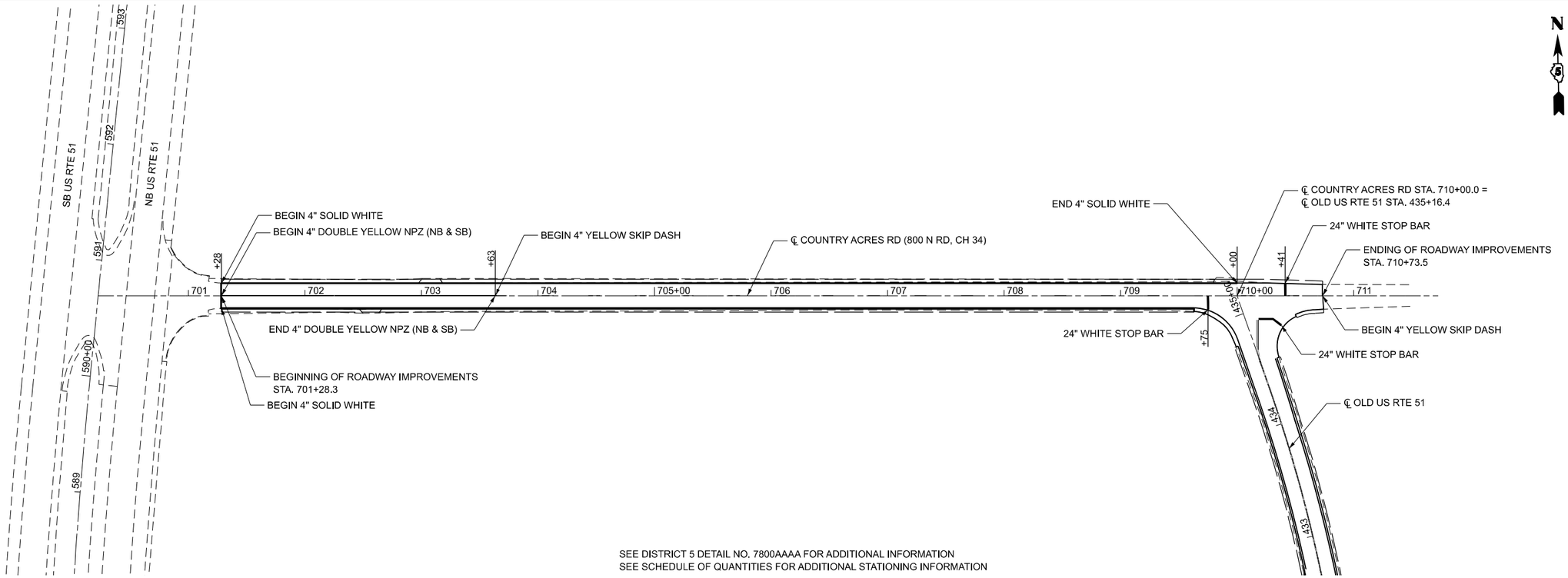

SEE DISTRICT 5 DETAIL NO. 7800AAAA FOR ADDITIONAL INFORMATION
SEE SCHEDULE OF QUANTITIES FOR ADDITIONAL STATIONING INFORMATION

MODEL: Border
FILE NAME: S:\PROJECTS\2023\1371D23_IDOT D5\WO 1 Contract 70G11\DESIGN_70G11\CAD_Sheets\WHAID570G11_Border.dgn

WILLETT HOFMANN & ASSOCIATES, INC.
PROFESSIONAL ENGINEERS AND LAND SURVEYORS
809 EAST 200 STREET, DANVILLE, ILLINOIS 61832-5667
T: 217-446-0500 FAX: 217-446-0501

USER NAME = afull	DESIGNED - AMF	REVISED -	
	DRAWN - TJA	REVISED -	
PLOT SCALE = 0.16666633 ' / in.	CHECKED - GFS	REVISED -	
PLOT DATE = 3/5/2024	DATE -	REVISED -	

STATE OF ILLINOIS
DEPARTMENT OF TRANSPORTATION

PAVEMENT MARKING PLANS

SCALE: 1"=50' | SHEET 14 OF 14 SHEETS | STA. 701+28.30 TO STA. 710+73.47

F.A. RTE.	SECTION	COUNTY	TOTAL SHEETS	SHEET NO.
*	(55/56)RS-5,57-1(1)RS-1	MCLEAN	85	67
		CONTRACT NO. 70G11		
	ILLINOIS	FED. AID PROJECT		

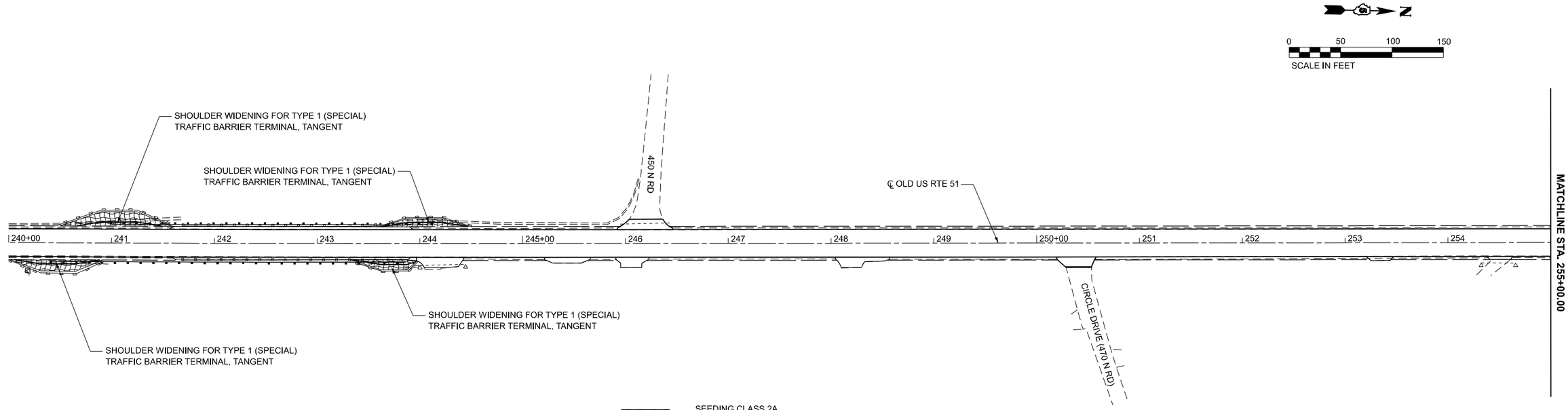

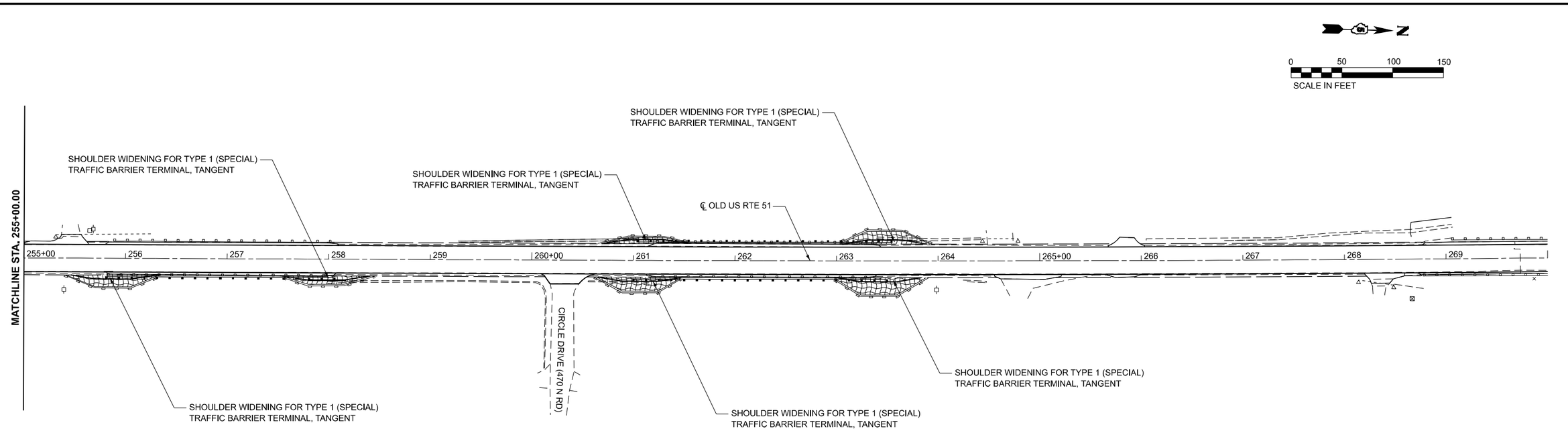

MODEL: Border
FILE NAME: S:\PROJECTS\2023\1371D23_IDOT\DS\WO 1 Contract 70G11\DESIGN_70G11\CAD_Sheets\WHAID\70G11_Border.dgn

WILLETT HOFMANN & ASSOCIATES INC
PROFESSIONAL DESIGN FIRM - LICENSE NO. 184-001598
809 EAST 200 STREET, O'FALLON, IL 62269-4367
T 618 624 3381 DESIGN FIRM: # 184-001598

USER NAME = afull	DESIGNED - AMF	REVISED -	
	DRAWN - TJA	REVISED -	
PLOT SCALE = 0.16666633 ' / in.	CHECKED - GFS	REVISED -	
PLOT DATE = 3/5/2024	DATE -	REVISED -	

STATE OF ILLINOIS
DEPARTMENT OF TRANSPORTATION

EROSION CONTROL PLAN

SCALE: 1"=50' | SHEET 1 OF 2 SHEETS | STA. 240+00.00 TO STA. 270+00.00

F.A. RTE.	SECTION	COUNTY	TOTAL SHEETS	SHEET NO.
*	(55/56)RS-5,57-1(1)RS-1	MCLEAN	85	68
		CONTRACT NO. 70G11		
	ILLINOIS	FED. AID PROJECT		

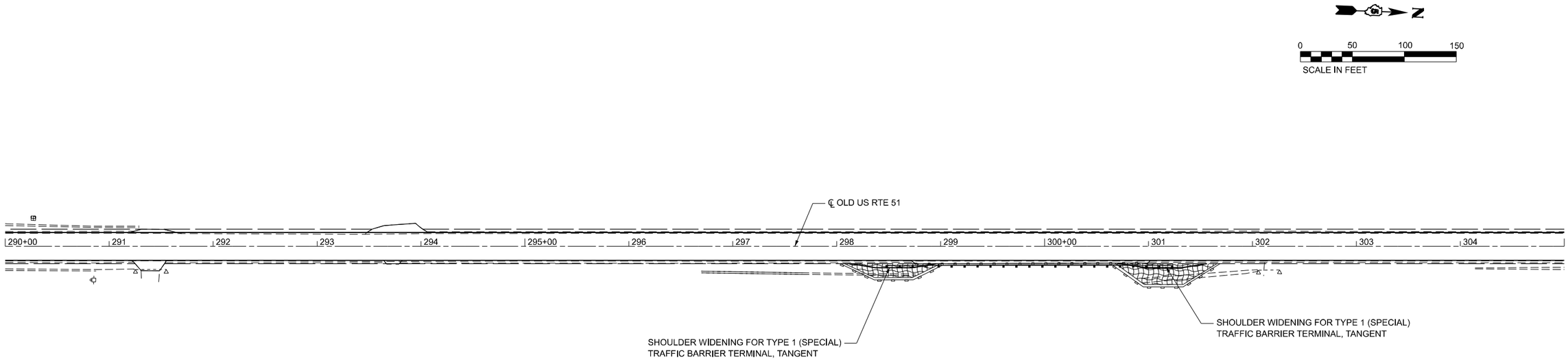

SEEDING CLASS 2A
W/ FERTILIZER NUTRIENTS
AND EROSION CONTROL BLANKET

PERIMETER EROSION BARRIER

MODEL: Border
FILE NAME: S:\PROJECTS\2023\1371D23_IDOTD5\WO 1 Contract 70G11\DESIGN_70G11\CAD_Sheets\WHAID570G11_Border.dgn

WILLETT HOFMANN & ASSOCIATES, INC.
PROFESSIONAL ENGINEERS AND LAND SURVEYORS
809 EAST 2ND STREET, DIXON, IL 61021-0367
T: 815 284 3381 DESIGN FIRM: # 184-000918

USER NAME = afull	DESIGNED - AMF	REVISED -	
	DRAWN - TJA	REVISED -	
PLOT SCALE = 0.16666633 ' / in.	CHECKED - GFS	REVISED -	
PLOT DATE = 3/5/2024	DATE -	REVISED -	

STATE OF ILLINOIS
DEPARTMENT OF TRANSPORTATION

EROSION CONTROL PLAN

SCALE: 1"=50' | SHEET 2 OF 2 SHEETS | STA. 290+00.00 R3 TO STA. 305+00.00 R3

F.A. RTE.	SECTION	COUNTY	TOTAL SHEETS	SHEET NO.
*	(55/56)RS-5,57-1(1)RS-1	MCLEAN	85	69
		CONTRACT NO. 70G11		
	ILLINOIS	FED. AID PROJECT		

ADA CURB RAMP PAVEMENT REMOVAL AND REPLACEMENT

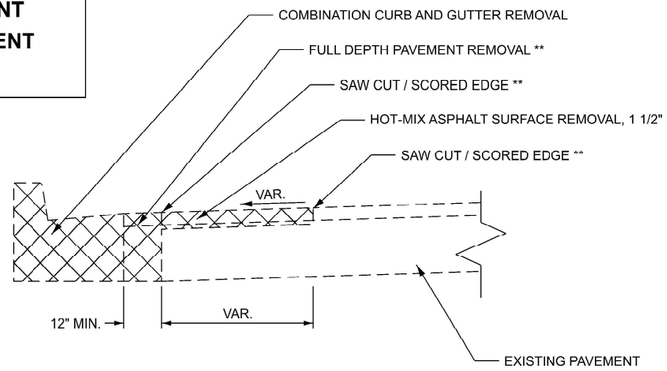

PAVEMENT REMOVAL

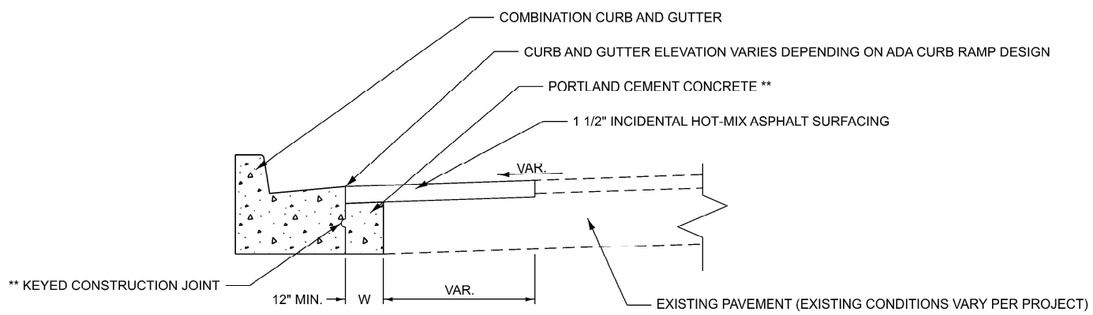

PAVEMENT REPLACEMENT

GENERAL NOTES

SEE STANDARD 606001 FOR CONCRETE CURB AND COMBINATION CURB AND GUTTER DETAILS NOT SHOWN

SEE STANDARD 420001 FOR KEYED CONSTRUCTION JOINT DETAILS.

SAW CUTTING / SCORING SHALL BE INCLUDED IN THE UNIT COST OF HOT-MIX ASPHALT SURFACE REMOVAL.

FULL DEPTH PAVEMENT REMOVAL SHALL BE INCLUDED IN THE UNIT COST OF COMBINATION CURB AND GUTTER REMOVAL.

PORTLAND CEMENT CONCRETE NEEDED TO FILL IN THE FORMWORK AREA IN FRONT OF THE COMBINATION CURB AND GUTTER SHALL BE INCLUDED IN THE UNIT COST OF COMBINATION CONCRETE CURB AND GUTTER .

IF THERE IS A CHANGE IN RADIUS AND THE DISTANCE BETWEEN THE NEW COMBINATION CURB AND GUTTER AND THE EXISTING PAVEMENT IS 4FT OF GREATER , THE PCC IN FRONT OF THE CURB AND GUTTER SHALL BE TIED TO THE NEW COMBINATION CURB AND GUTTER AND THE EXISTING PAVEMENT WITH TIE BARS. TIE BARS SHALL BE INCLUDED IN THE UNIT COST OF COMBINATION CONCRETE CURB AND GUTTER.

CONSTRUCTION SEQUENCE

1. REMOVE EXISTING FULL DEPTH PAVEMENT AND CURB AND GUTTER.

2. FORM AND POUR COMBINATION CONCRETE CURB AND GUTTER.

3. REPLACE FULL DEPTH PAVEMENT WITH PORTLAND CEMENT CONCRETE (UP TO 1 1/2" FROM FINISHED SURFACE ELEVATION TO ALLOW FOR HMA OVERLAY).

4. HOT-MIX ASPHALT REMOVAL AND REPLACEMENT.

NOTES

ALL DIMENSION ARE IN INCHES UNLESS OTHERWISE NOTED

** COST INCLUDED IN OTHER PAY ITEMS PER SPECIAL PROVISIONS

*** IF W > 24" TIE BARS SHALL BE USED INSTEAD OF KEYED CONSTRUCTION JOINT

COMBINATION CONCRETE CURB AND GUTTER, TYPE B SPECIAL

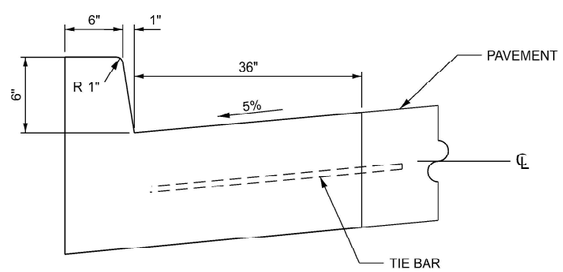

COMBINATION CONCRETE CURB AND GUTTER, TYPE B SPECIAL DETAIL

GENERAL NOTES

THE BOTTOM SLOPE OF CURB AND GUTTER CONSTRUCED ADJACENT TO PCC PAVEMENT SHALL BE THE SAME SLOPE AS THE SUBBASE OR 5% WHEN SUBBASE IS OMMITED.

LONGITUDINAL JOINT TIE BARS SHALL BE NO. 6 (NO. 19) AT 36" (900 MM) CENTERS IN ACCORDANCE WITH DETAILS FOR LONGITUDINAL CONSTRUCTION JOINT SHOWN ON STANDARD 420001.

A MINIMUM CLEARANCE OF 2" (50MM) BETWEEN THE END OF THE TIE BAR AND THE BACK OF THE CURB SHALL BE MAINTAINED.

THE DOWEL BARS SHOWN IN CONTRACTION JOINTS WILL ONLY BE REQUIRED FOR MONOLITHIC CONSTRUCTION.

MODEL: ADA CURB RAMP PAVEMENT REMOVAL [Sheet]
FILE NAME: F:\Projects\30 IDOT\50_15SA_23_PTB_207_040 -keyworth ADA (Sub to Willett Hofman)\Workfile\Sheets\D570G11-sht-details-ADA Curb Ramp Standard.dgn

HERMANN & Associates, LLC Civil Engineers	USER NAME = jusliri	DESIGNED -	REVISED -	STATE OF ILLINOIS DEPARTMENT OF TRANSPORTATION	ADA CURB RAMP PAVEMENT REMOVAL AND REPLACEMENT AND COMBINATION CONCRETE CURB AND GUTTER, TYPE B SPECIAL	F.A. RTE.	SECTION	COUNTY	TOTAL SHEETS / SHEET NO.
		DRAWN -	REVISED -			*	(55/56)RS-5,57-1(1)RS-1	MCLEAN	85 / 70
	PLOT SCALE = 0.16666633 ' / in.	CHECKED -	REVISED -			CONTRACT NO. 70G11			
	PLOT DATE = 3/5/2024	DATE -	REVISED -		SCALE: SHEET OF SHEETS STA. TO STA.	ILLINOIS	FED. AID PROJECT		

PROJECTS WITHOUT RECONSTRUCTION

S.M.A.R.T. IMPROVEMENTS
(ALSO CONTRACT MAINTENANCE)

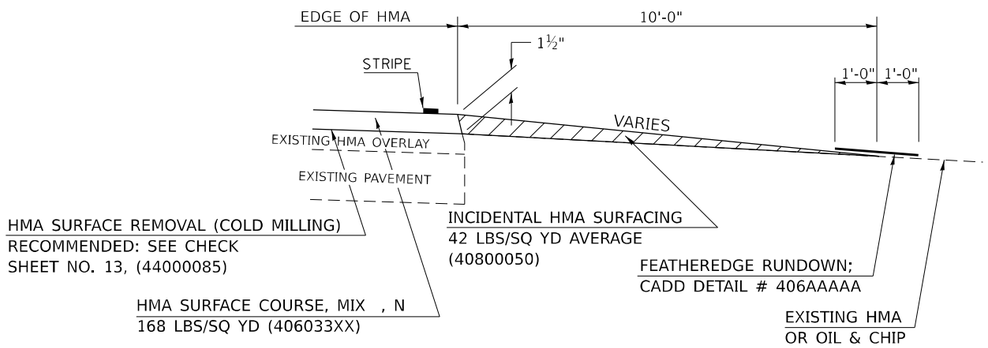

"3P" OR "3R" IMPROVEMENTS

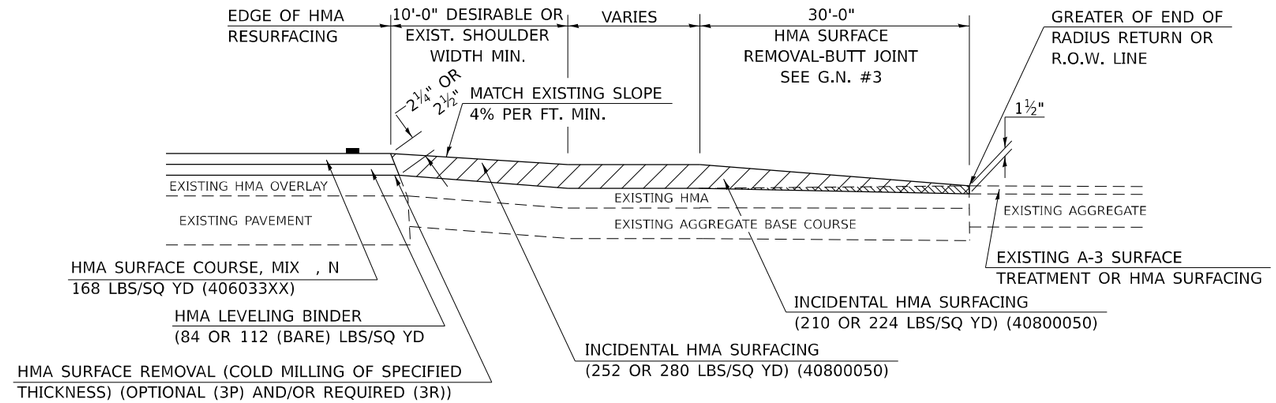

PROJECTS WITH RECONSTRUCTION
("3R" IMPROVEMENTS)

WITH HMA SHOULDER

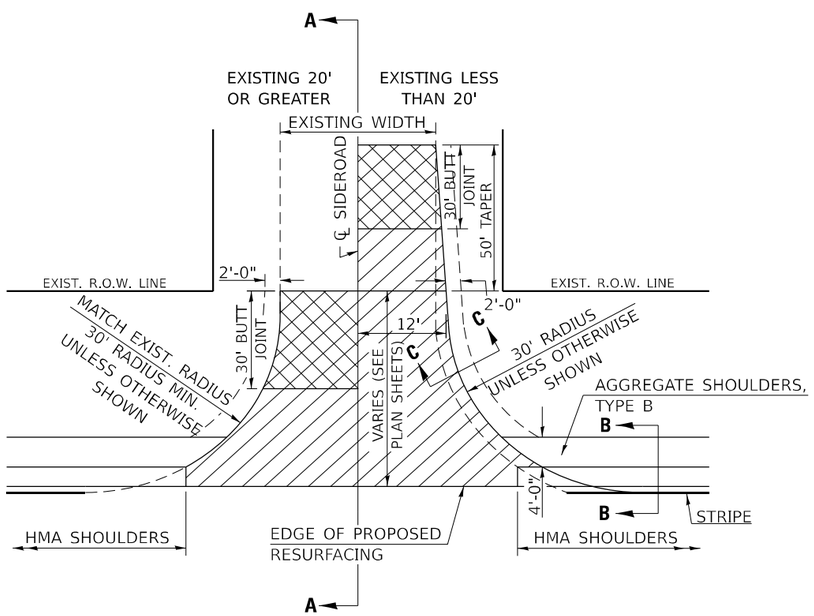

WITHOUT HMA SHOULDER

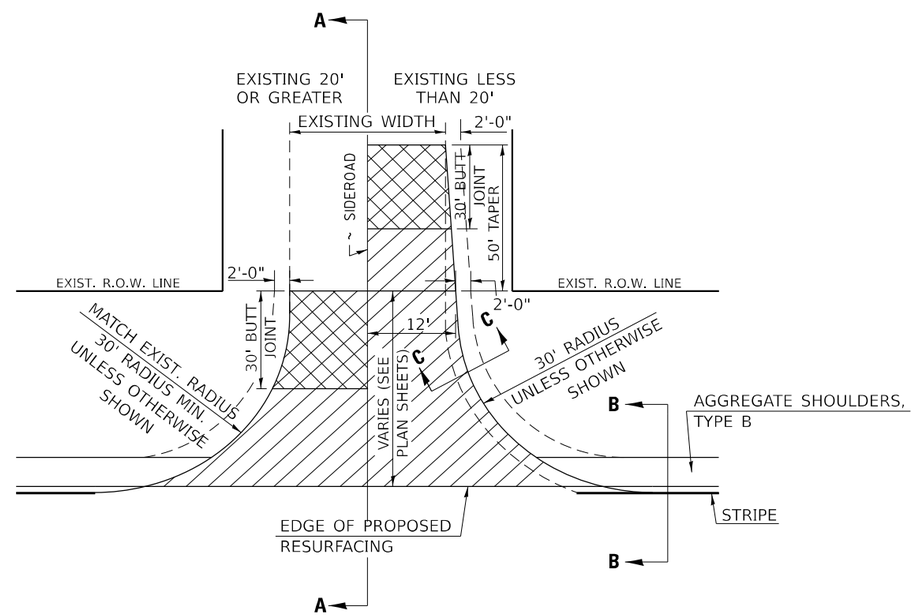

GENERAL NOTES

1. THE EXISTING SURFACE SHALL BE PREPARED IN ACCORDANCE WITH SECTION 408 OF THE STANDARD SPECIFICATIONS
2. PROPOSED SIDEROAD GRADES SHALL BE AS SHOWN IN THE PLANS AND/OR AS DIRECTED BY THE ENGINEER.
3. MAJOR SIDEROAD/SIDESTREETS (>400 ADT) SHALL HAVE "BUTT JOINTS" CONSTRUCTED WHETHER THE EXISTING ENTRANCE IS HMA OR PCC. MINOR SIDEROAD/SIDESTREETS (<400 ADT) SHALL HAVE "FEATHEREDGE RUNDOWNS".
4. AGGREGATE BASE COURSE, TYPE B OF THE THICKNESS SPECIFIED IN THE PLANS 6" MIN. SHALL BE USED WHERE IN THE OPINION OF THE ENGINEER THERE IS NOT 6" EXISTING BASE MATERIAL FOR THE PROPOSED SIDEROAD RETURNS. THIS MATERIAL SHALL BE USED TO WIDEN SIDEROAD RETURNS.
5. THE AGGREGATE BASE COURSE SHALL BE CONSTRUCTED 1' WIDER THAN THE SURFACE DIMENSIONS.
6. AGGREGATE SHOULDERS, TYPE B WILL BE WRAPPED AROUND THE SIDEROAD RETURNS. TAPER WIDTH FROM 4' ALONG MAINLINE TO 2' AT BACK OF RETURN.

Note: All dimensions are in INCHES (millimeters) unless otherwise shown.

DISTRICT 5 DETAIL NO. 408000AA

WILLETT HOFMANN & ASSOCIATES INC
ARCHITECTURE · ENGINEERING · PLANNING
801 EAST ONEIDA STREET, OSWEGO, ILLINOIS 60543
T 815 284 3081 DESIGN FIRM: # 184 000918

USER NAME = afull	DESIGNED - AMF	REVISED -	
	DRAWN - TJA	REVISED -	
PLOT SCALE = 0.16666633 ' / in.	CHECKED - GFS	REVISED -	
PLOT DATE = 3/5/2024	DATE -	REVISED -	

STATE OF ILLINOIS
DEPARTMENT OF TRANSPORTATION

SIDEROAD & SIDESTREETS (RURAL)

SCALE: | SHEET 1 OF 2 SHEETS | STA. | TO STA.

F.A. RTE.	SECTION	COUNTY	TOTAL SHEETS	SHEET NO.
*	(55/56)RS-5,57-1(1)RS-1	MCLEAN	85	71
		CONTRACT NO. 70G11		
		ILLINOIS	FED. AID PROJECT	

SECTION A–A
EXISTING HMA OR PCC SIDEROAD (>400 ADT)

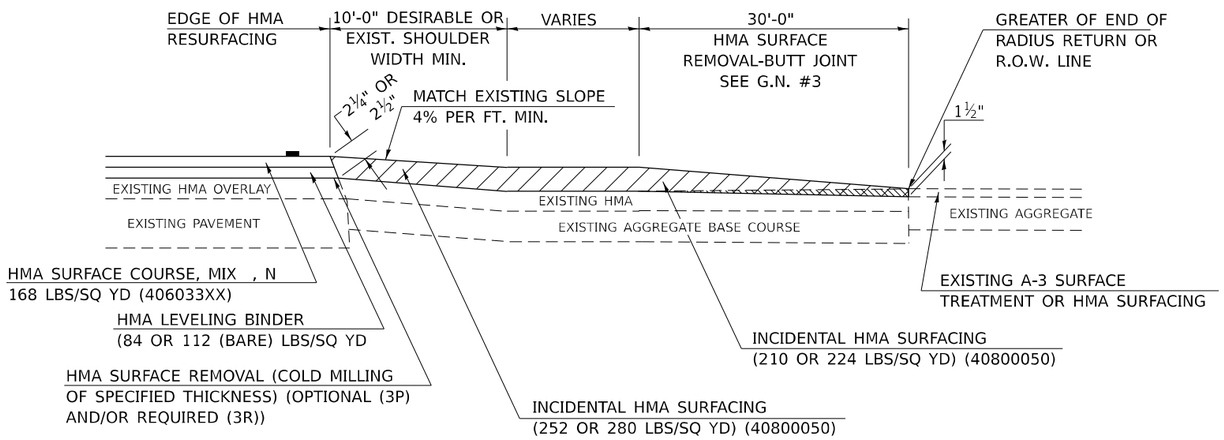

RURAL SIDEROAD DESIGN STANDARDS (PPM 40-06)									
	New Construction & 3R (Existing Width Less Than 20 ft)			3R (Existing Width 20 ft or Greater) & 3P			SMART & Contract Maintenance		
DESIGN ELEMENT	min.	des.	max.	min.	des.	max.	min.	des.	max.
SURFACE WIDTH (FT); (Measured at end of radius or row line; greatest distance from edge of traveled way)	24	24	Coordinate with Geometrics Engineer	Resurface existing configuration to completion of radius return or row line; greatest distance from edge of traveled way; major sideroads (> 400 adt) shall have "butt joints" constructed whether the entrance is hma or pcc; minor sideroads (< 400 adt) shall have "featheredge rundown" as shown in district cadd detail 406AAAA			resurface existing configuration with the completion of a 10 ft. featheredge rundown for ALL sideroads as shown in district cadd detail 406AAAAA		
RADIUS (FT)	30	30							
SHOULDER WIDTH (FT)	4	8	10						
SHOULDER SLOPE (%)	2	4	12						
ENTRANCE GRADE (%)	1	1 to 4	4						
BREAKOVER (%)	0	5	10						
SIDE SLOPE (FT)	1:10	1:6	1:4						
INTERSECTION ANGLE	60	75 to 90							
SURFACE TYPE									
INCIDENTAL HMA SURFACING (INCH)	4			taper from 2 1/4" to 1 1/2" or featheredge			taper from 1 1/2" to featheredge		
AGGREGATE BASE COURSE, TYPE A (INCH)	8	4		if applicable use item: 35800100 Preparation of Base					
PCC PAVEMENT (INCH)		8							

SECTION A–A
EXISTING AGGREGATE OR SEAL COAT SIDEROAD (<400 ADT)

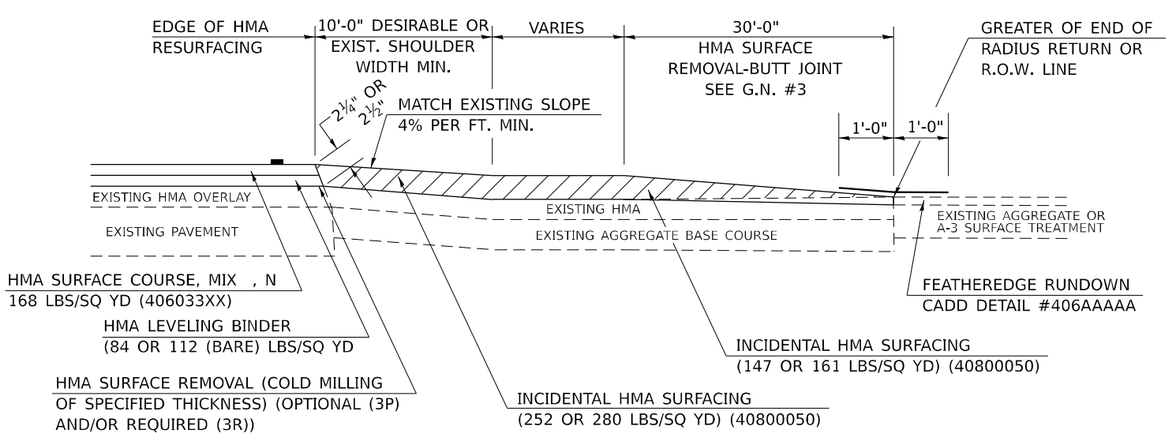

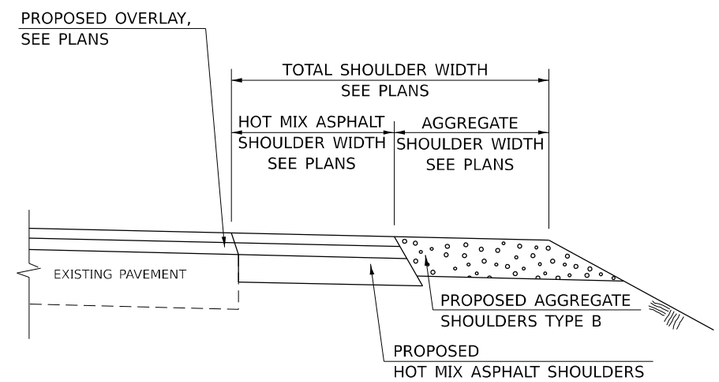

SECTION B–B
MAINLINE SHOULDER TREATMENT

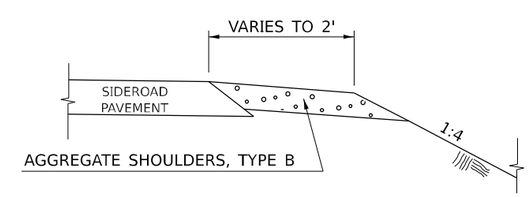

SECTION C–C
SIDEROAD SHOULDER TREATMENT

Note: All dimensions are in INCHES (millimeters) unless otherwise shown.

DISTRICT 5 DETAIL NO. 408000AA

MODEL: Border
FILE NAME: S:\PROJECTS\2023\1371D23_IDOTD5\WO 1 Contract 70G11\DESIGN_70G11\CAD_Sheets\WHA\D570G11_Border.dgn

WILLETT HOFMANN & ASSOCIATES INC
ENGINEERING ARCHITECTURE LAND SURVEYING
809 EAST 200 STREET, LINCOLN, IL 61561-0367
T: 217 735 3581 DESIGN FIRM # 184-000918

USER NAME = afull	DESIGNED - AMF	REVISED -	
	DRAWN - TJA	REVISED -	
PLOT SCALE = 0.16666633 ' / in.	CHECKED - GFS	REVISED -	
PLOT DATE = 3/5/2024	DATE -	REVISED -	

STATE OF ILLINOIS
DEPARTMENT OF TRANSPORTATION

SIDEROAD & SIDESTREETS (RURAL)

SCALE: | SHEET 2 OF 2 SHEETS | STA. | TO STA.

F.A. RTE.	SECTION	COUNTY	TOTAL SHEETS	SHEET NO.
*	(55/56)RS-5,57-1(1)RS-1	MCLEAN	85	72
		CONTRACT NO. 70G11		
	ILLINOIS	FED. AID PROJECT		

PROJECTS WITHOUT RECONSTRUCTION

("3R" WITHOUT RECONSTRUCTION, 3P, SMART AND CM)

S.M.A.R.T. IMPROVEMENTS

(POLICY RESURFACING; BDE 53–4.03; 1½")

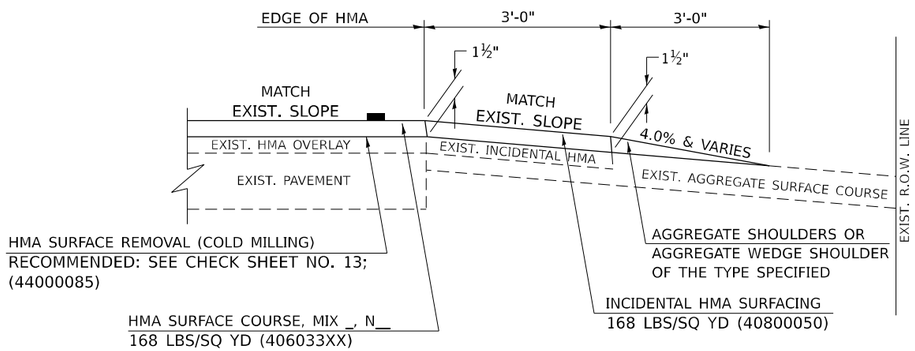

"3P" OR "3R" IMPROVEMENTS

(POLICY RESURFACING; BDE 53–4.02; 2¼" OR 2½" ON BARE CONCRETE)

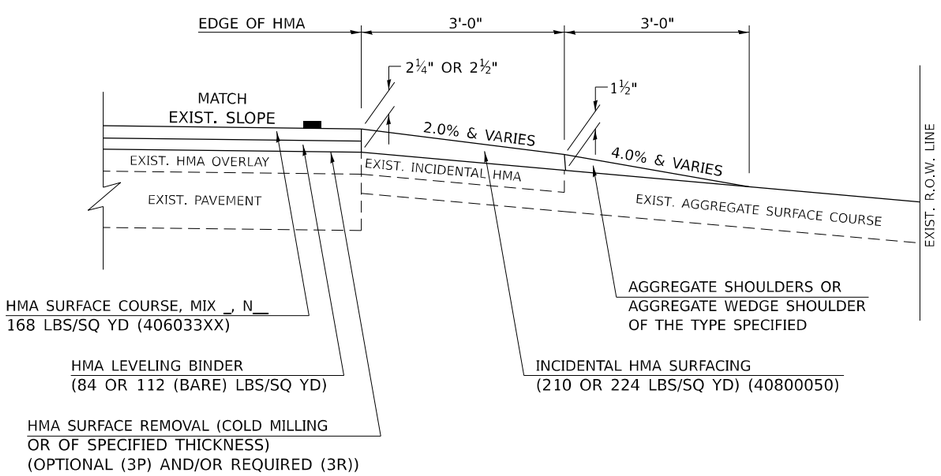

PROJECTS WITH RECONSTRUCTION

("3R" IMPROVEMENTS AND SMART/3P "SPOT" LOCATIONS)

ADJACENT TO PROPOSED HMA SHOULDERS

(AGGREGATE OR EARTH ENTRANCE)

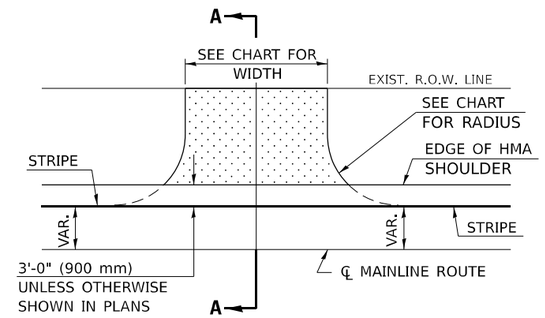

TYPICAL APPLICATION

EXISTING AGGREGATE OR EARTH ENTRANCE

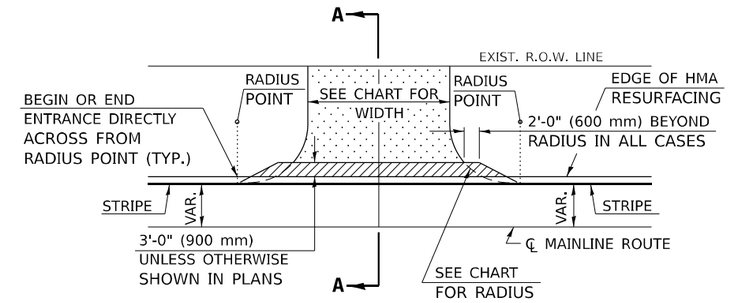

TYPICAL APPLICATION

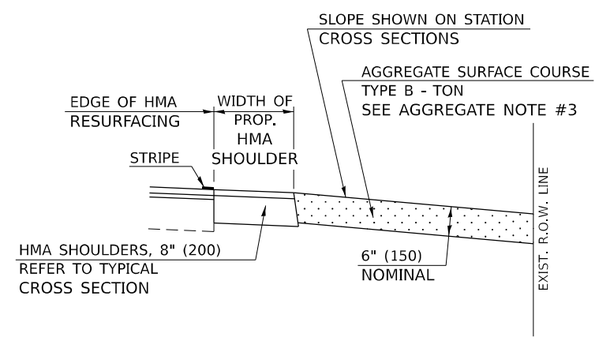

SECTION A–A

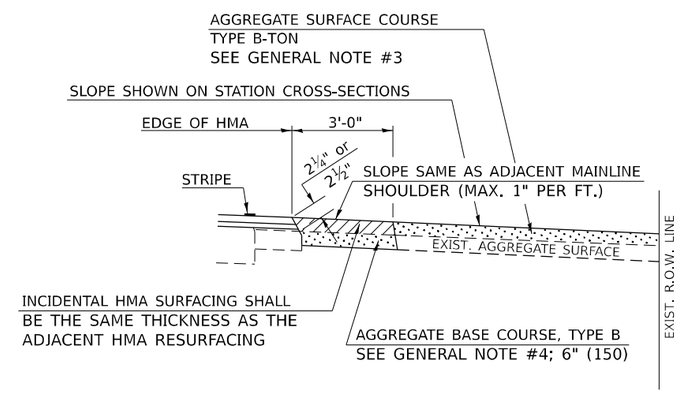

SECTION A–A

Note: All dimensions are in INCHES
(millimeters) unless otherwise shown.

DISTRICT 5 DETAIL NO. 40800050A

MODEL: Border
FILE NAME: S:\PROJECTS\2023\3171D23_IDOTD5\WO 1 Contract 70G11\DESIGN_70G11\CAD_Sheets\WHAID570G11_Border.dgn

WILLETT HOFMANN & ASSOCIATES INC
ENGINEERING · SURVEYING · LANDSCAPE ARCHITECTURE
807 EAST 2ND STREET, 2 NORTH, IL 61101-0587
T: 815.226.3381 · FIELD CONTROL: 7 · 84-000918

USER NAME = afull	DESIGNED - AMF	REVISED -	
	DRAWN - TJA	REVISED -	
PLOT SCALE = 0.16666633 ' / in.	CHECKED - GFS	REVISED -	
PLOT DATE = 3/5/2024	DATE -	REVISED -	

STATE OF ILLINOIS
DEPARTMENT OF TRANSPORTATION

FIELD ENTRANCES (NONCOMMERCIAL RURAL)

SCALE: | SHEET 1 OF 2 SHEETS | STA. TO STA.

F.A. RTE.	SECTION	COUNTY	TOTAL SHEETS	SHEET NO.
*	(55/56)RS-5,57-1(1)RS-1	MCLEAN	85	73
		CONTRACT NO. 70G11		
	ILLINOIS	FED. AID PROJECT		

RURAL ENTRANCE DESIGN STANDARDS (PPM 40-09)

	NEW CONSTRUCTION & 3R with CONSTRUCTION								3R w/out RECONSTRUCTION, 3P, SMART & CM					
	NONCOMMERCIAL								NONCOMMERCIAL					
	PRIVATE & FIELD			FIELD W/FARM IMPLEMENTS		COMMERCIAL			PRIVATE & FIELD			COMMERCIAL		
DESIGN ELEMENT	min.	des.	max.	min.	max.	min.	des.	max.	min.	des.	max.	min.	des.	max.
						1 LANE, 1 WAY						1 LANE, 1 WAY		
SURFACE WIDTH (FT)	12	16	24	24	30	14	16	24						
						2 LANE, 2 WAY						2 LANE, 2 WAY		
						24	30	35						
RADIUS (FT)	15	25	40	30		20	30	50	resurface existing configuration; existing aggregate or earth entrances shall have the continuation of aggregate shoulders placed behind them					
SHOULDER WIDTH (FT)	2	2		2		1	3							
SHOULDER SLOPE (%)	2	4	6	4		2	4	6						
ENTRANCE GRADE (%)	0	2 to 5	10 or 12	2 to 5	10 or 12	0	2 to 5	8 or 10						
SIDE SLOPE (FT)	1:4	1:6	1:10	1:4	1:6	1:4	1:6	1:10						
SURFACE TYPE														
INCIDENTAL HMA SURFACING (INCH)		2		2		3 or 4			taper from hma resurfacing thickness (2 1/2", 2 1/4" or 1 1/2") to 1 1/2" to minimize aggregate shoulder					
AGGREGATE SURFACE COURSE, TYPE B (INCH)		6		6		8			if applicable, use items: Preparation of Base & Aggregate Base Repair; see PPM 30-02					
PCC DRIVEWAY PAVEMENT (INCH)		6						6 or 8						

GENERAL NOTES

1. THE EXISTING SURFACE SHALL BE PREPARED IN ACCORDANCE WITH SECTION 408 OF THE STANDARD SPECIFICATIONS.
2. ANY NECESSARY WORK BEHIND THE HMA SHOULDER OR THE INCIDENTAL HMA SURFACING SHALL BE AS SHOWN IN THE PLANS AND/OR AS DIRECTED BY THE ENGINEER.
3. EARTH EXCAVATION REQUIRED FOR THE CONSTRUCTION OF THE AGGREGATE SURFACE COURSE SHALL BE INCLUDED IN THE COST OF AGGREGATE SURFACE COURSE.
4. AGGREGATE BASE COURSE, TYPE B, 6" (150 mm) MIN. SHALL BE USED WHERE IN THE OPINION OF THE ENGINEER THERE IS NOT SUFFICIENT BASE MATERIAL FOR THE PROPOSED ENTRANCES. THIS MATERIAL SHALL GENERALLY BE USED TO WIDEN ANY EXISTING RETURN OR TO CONSTRUCT NEW ENTRANCES WHERE NONE NOW EXISTS.
5. THE AGGREGATE BASE COURSE SHALL BE CONSTRUCTED 12" (300 mm) WIDER THAN THE SURFACE DIMENSIONS AS SHOWN ABOVE.
6. EXISTING FIELD ENTRANCES OF AGGREGATE OR EARTH WITH NO HMA APRON SHALL NOT RECEIVE A NEW HMA APRON WITHOUT PROPER APPROVAL THROUGH THE BUREAU OF OPERATIONS "POLICY ON PERMITS FOR ACCESS DRIVEWAYS TO STATE HIGHWAYS".
7. TO ASSURE APPROPRIATE ACCESS POLICIES ARE FOLLOWED ALL NEW ACCESS SHALL BE APPLIED FOR THROUGH THE BUREAU OF OPERATIONS PERMIT APPLICATION PROCESS. PLAN PREPARATION MEMORANDUMS 40-09 ALONG WITH DISTRICT PROJECT IMPLEMENTATION MEMORANDUM 104/01 DISCUSS THIS PROCEDURE.

Note: All dimensions are in INCHES (millimeters) unless otherwise shown.

DISTRICT 5 DETAIL NO. 40800050A

MODEL: Border
FILE NAME: S:\PROJECTS\2023\371D23_IDOTD5\WO 1 Contract 70G11\DESIGN_70G11\CAD_Sheets\WHA\D570G11_Border.dgn

WILLETT HOFMANN & ASSOCIATES INC
607 EAST ADAMS STREET, SPRINGFIELD, IL 62701-1607
T 217 789 1381 F 217 789 9918

USER NAME = afull	DESIGNED - AMF	REVISED -	
	DRAWN - TJA	REVISED -	
PLOT SCALE = 0.16666633 ' / in.	CHECKED - GFS	REVISED -	
PLOT DATE = 3/5/2024	DATE -	REVISED -	

STATE OF ILLINOIS
DEPARTMENT OF TRANSPORTATION

FIELD ENTRANCES (NONCOMMERCIAL RURAL)

SCALE: | SHEET 2 OF 2 SHEETS | STA. TO STA.

F.A. RTE.	SECTION	COUNTY	TOTAL SHEETS	SHEET NO.
*	(55/56)RS-5,57-1(1)RS-1	MCLEAN	85	74
		CONTRACT NO. 70G11		
	ILLINOIS	FED. AID PROJECT		

PROJECTS WITHOUT RECONSTRUCTION

S.M.A.R.T. IMPROVEMENTS

(POLICY RESURFACING; BDE 53–4.03; 1½")

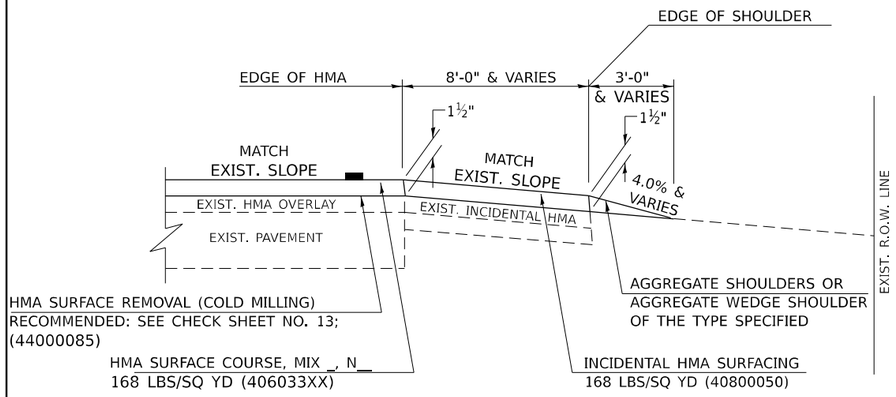

"3P" OR "3R" IMPROVEMENTS

(POLICY RESURFACING; BDE 53–4.02; 2¼" OR 2½" ON BARE CONCRETE)

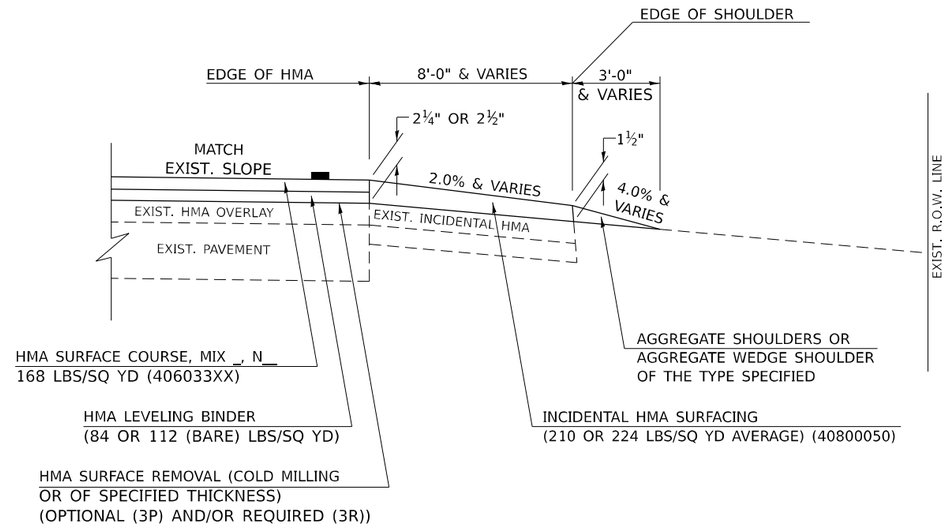

GENERAL NOTES

1. THE EXISTING SURFACE SHALL BE PREPARED IN ACCORDANCE WITH SECTION 408 OF THE STANDARD SPECIFICATIONS.
2. AGGREGATE BASE COURSE, TYPE B, 6" (150) MIN. SHALL BE USED WHERE IN THE OPINION OF THE ENGINEER THERE IS NOT SUFFICIENT BASE MATERIAL FOR THE PROPOSED MAILBOX TURNOUTS. THIS MATERIAL SHALL GENERALLY BE USED TO WIDEN ALL EXISTING MAILBOX TURNOUTS OR TO CONSTRUCT NEW MAILBOX TURNOUTS WHERE NONE NOW EXISTS.
3. ANY NECESSARY WORK BEHIND THE INCIDENTAL HMA SURFACING SHALL BE AS SHOWN IN THE PLANS AND/OR AS DIRECTED BY THE ENGINEER.
4. THE TEMPORARY RELOCATION OF EXISTING MAILBOXES SHALL BE IN ACCORDANCE WITH ARTICLE 107.20 OF THE STANDARD SPECIFICATIONS.
5. WHEN MORE THAN ONE RELOCATED MAILBOX IS INCLUDED IN A PARTICULAR LOCATION THE TWO 10' (3 m) DIMENSIONS AS SHOWN ABOVE SHALL BE FROM THE END MAILBOX.
6. CROSS SLOPE SHALL BE AS SHOWN ON THE STATION CROSS SECTIONS AND/OR AS DIRECTED BY THE ENGINEER. MINIMUM 4% (1/2"/') DESIRABLE; MAXIMUM 8% (1"/')
7. WHEN MAILBOX TURNOUTS ARE CONSTRUCTED ADJACENT TO FIELD ENTRANCES, THE WIDTH OF THE INCIDENTAL HMA SURFACING CONSTRUCTED FOR THE FIELD ENTRANCE SHALL MATCH THE WIDTH OF THE PROPOSED MAILBOX TURNOUT SURFACING.
8. THE TOTAL SHOULDER WIDTH, 2.4 m (8') MINIMUM, SHALL BE PAVED BETWEEN SIDEROADS ENTRANCES AND/OR MAILBOX TURNOUTS AT LOCATIONS WHERE THE DISTANCE BETWEEN RADIUS OR TAPER CONTROL POINTS IS LESS THAN 15.0 m (50').
9. MAILBOXES SHALL BE MOUNTED SUCH THAT THE FACE OF THE MAILBOX IS 6" (150 mm) TO 12" (300 mm) AND THE POST A MINIMUM OF 24" (600 mm) FROM THE EDGE OF THE TURNOUT SURFACING.

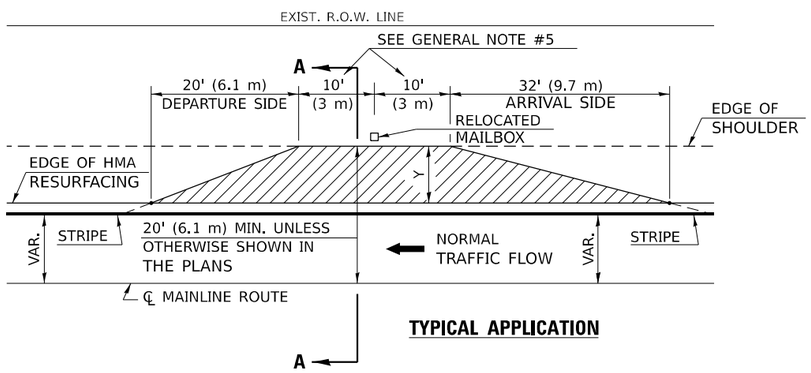

TYPICAL APPLICATION

PROJECTS WITH RECONSTRUCTION

("3R" IMPROVEMENTS)

WIDTH OF SHOULDER	4'-0" - 8'-0" (1.2 m - 2.4 m)	10'-0" (3.0 m)
WIDTH OF TURNOUT "Y"	8'-0" (2.4 m)	8'-0" - 10'-0" (2.4 m - 3.0 m)

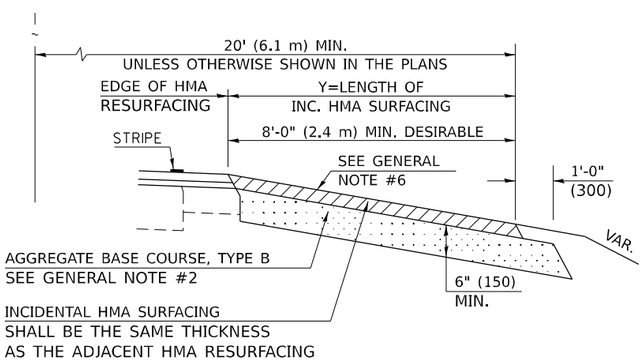

SECTION A–A

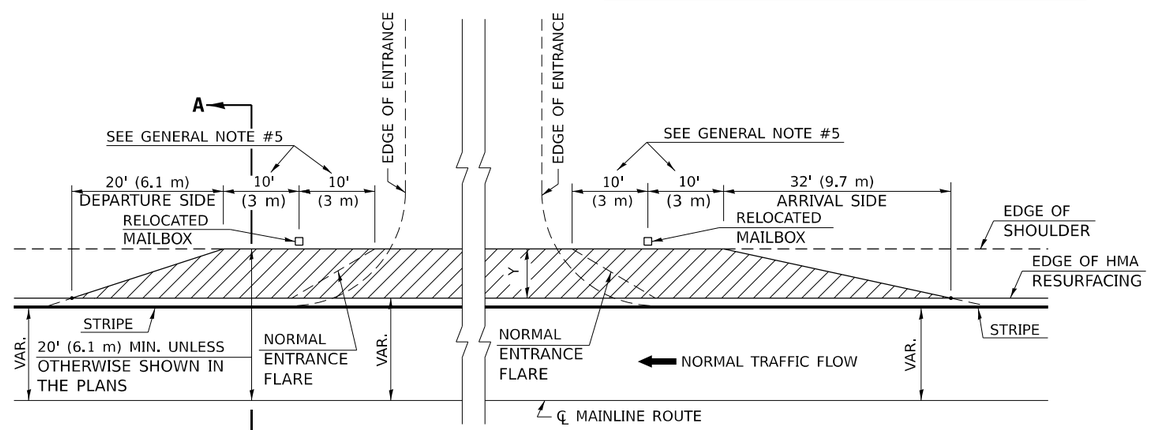

TYPICAL MAILBOX TURNOUT PLACEMENT ADJACENT TO ENTRANCE

Note: All dimensions are in INCHES (millimeters) unless otherwise shown.

DISTRICT 5 DETAIL NO. 40800050B

WILLETT HOFMANN & ASSOCIATES INC.
ENGINEERING · SURVEYING · LAND ARCHITECTURE
809 EAST 2ND STREET, DIXON, IL 61021-0367
T: 815 284-3381 · FAX CONTRACT: 815 284-3381

USER NAME = afull	DESIGNED - AMF	REVISED -	
	DRAWN - TJA	REVISED -	
PLOT SCALE = 0.16666633 ' / in.	CHECKED - GFS	REVISED -	
PLOT DATE = 3/5/2024	DATE -	REVISED -	

STATE OF ILLINOIS
DEPARTMENT OF TRANSPORTATION

MAILBOX TURNOUT (RURAL)

SCALE: | SHEET 1 OF 1 SHEETS | STA. | TO STA.

F.A. RTE.	SECTION	COUNTY	TOTAL SHEETS	SHEET NO.
*	(55/56)RS-5,57-1(1)RS-1	MCLEAN	85	75
		CONTRACT NO. 70G11		
	ILLINOIS	FED. AID PROJECT		

MODEL: Border
FILE NAME: S:\PROJECTS\2023\1371D23_IDOTD5\WO 1 Contract 70G11\DESIGN_70G11\CAD_Sheets\WHAID570G11_Border.dgn

PROJECTS WITHOUT RECONSTRUCTION

S.M.A.R.T. IMPROVEMENTS
(POLICY RESURFACING; BDE 53–4.03; 1½")

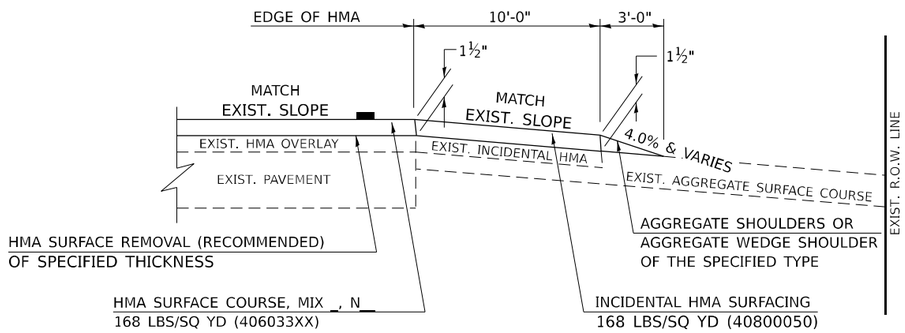

EXISTING AGGREGATE ENTRANCE

"3P" OR "3R" IMPROVEMENTS
(POLICY RESURFACING; BDE 53–4.02; 2¼" OR 2½" ON BARE CONCRETE)

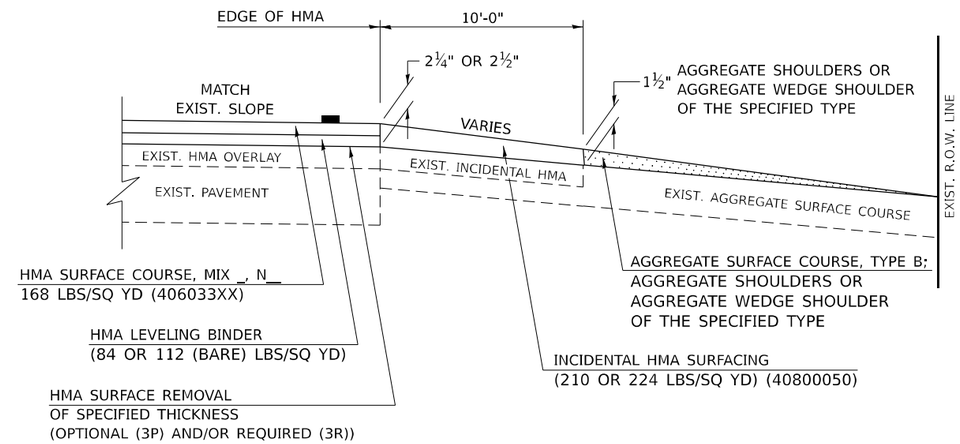

EXISTING AGGREGATE ENTRANCE

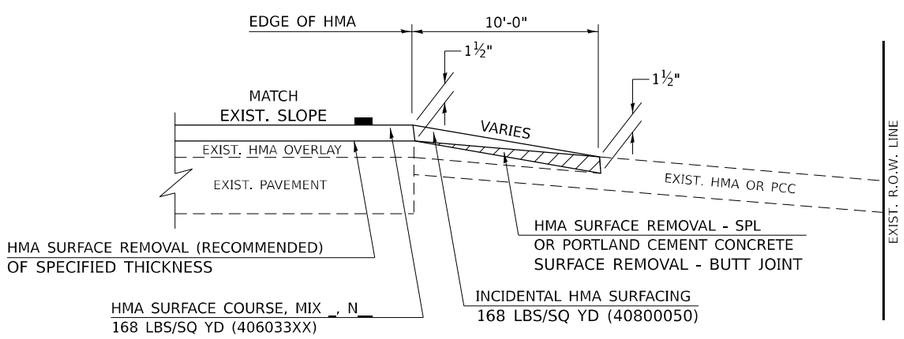

EXISTING HMA OR PCC ENTRANCE

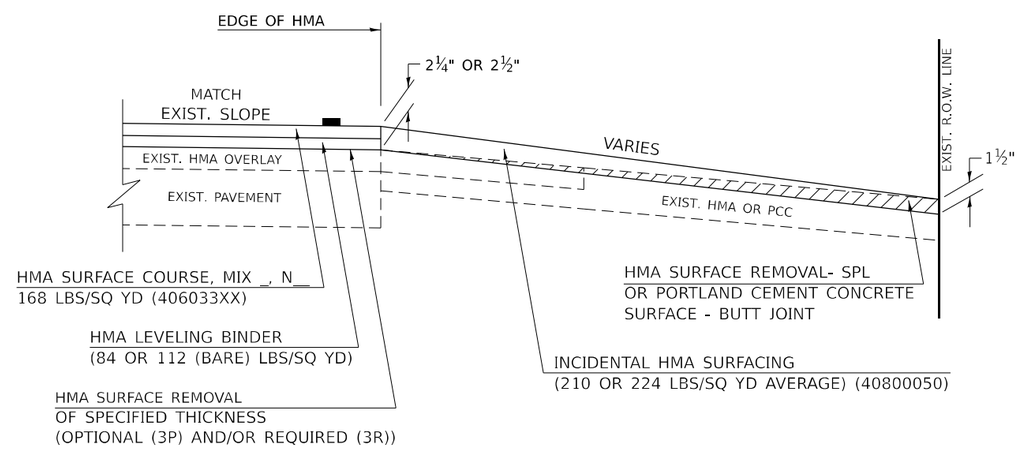

EXISTING HMA OR PCC ENTRANCE

Note: All dimensions are in INCHES
(millimeters) unless otherwise shown.

DISTRICT 5 DETAIL NO. 40800050C

MODEL: Border
FILE NAME: S:\PROJECTS\2023\1371D23_IDOTD5\WO 1 Contract 70G11\DESIGN_70G11\CAD_Sheets\WHA\D570G11_Border.dgn

WILLETT HOFMANN & ASSOCIATES, LTD.
PROFESSIONAL ENGINEERS · LAND SURVEYORS
809 EAST 2ND STREET, DIXON, IL 61021-0367
T: 815-284-3081 · FAX: 815-284-3033

USER NAME = afull	DESIGNED - AMF	REVISED -	
	DRAWN - TJA	REVISED -	
PLOT SCALE = 0.16666633 ' / in.	CHECKED - GFS	REVISED -	
PLOT DATE = 3/5/2024	DATE -	REVISED -	

STATE OF ILLINOIS
DEPARTMENT OF TRANSPORTATION

PRIVATE COMMERCIAL ENTRANCE
(NONCOMMERCIAL AND COMMERCIAL RURAL)

SCALE: | SHEET 1 OF 2 SHEETS | STA. | TO STA.

F.A. RTE.	SECTION	COUNTY	TOTAL SHEETS	SHEET NO.
*	(55/56)RS-5,57-1(1)RS-1	MCLEAN	85	76
		CONTRACT NO. 70G11		
	ILLINOIS	FED. AID PROJECT		

PROJECTS WITH RECONSTRUCTION

(3R IMPROVEMENTS)

AGGREGATE ENTRANCE

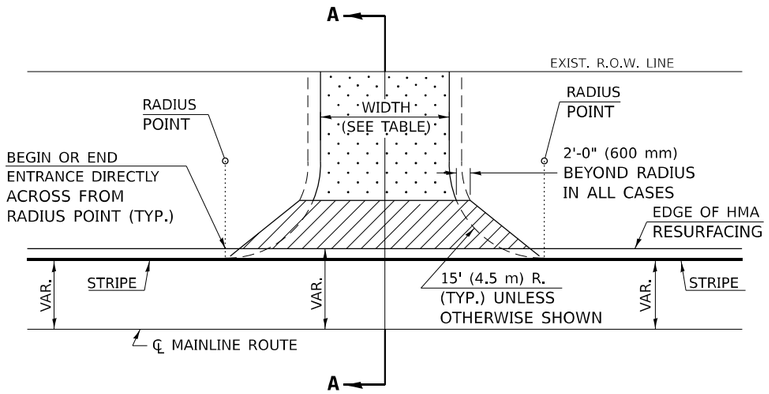

TYPICAL APPLICATION

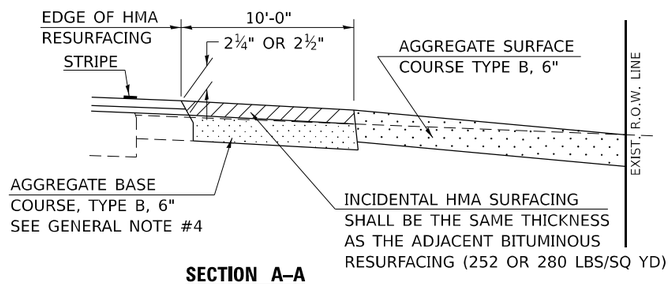

SECTION A–A

HMA OR PCC ENTRANCE

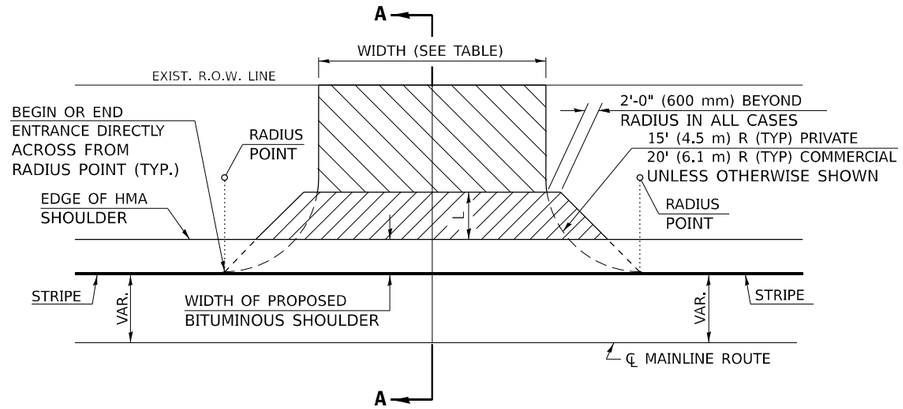

TYPICAL APPLICATION

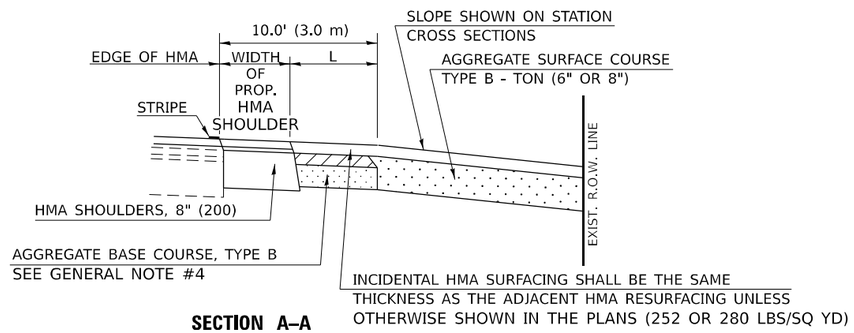

SECTION A–A
"HMA EXAMPLE"

GENERAL NOTES

1. THE EXISTING SURFACE SHALL BE PREPARED IN ACCORDANCE WITH SECTION 408 OF THE STANDARD SPECIFICATIONS.
2. ANY NECESSARY WORK BEHIND THE HMA SHOULDER OR THE INCIDENTAL HMA SURFACING SHALL BE AS SHOWN IN THE PLANS AND/OR AS DIRECTED BY THE ENGINEER.
3. EARTH EXCAVATION REQUIRED FOR THE CONSTRUCTION OF THE AGGREGATE SURFACE COURSE SHALL BE INCLUDED IN THE COST OF AGGREGATE SURFACE COURSE.
4. AGGREGATE BASE COURSE, TYPE B, 6" (150 mm) MIN. SHALL BE USED WHERE IN THE OPINION OF THE ENGINEER THERE IS NOT SUFFICIENT BASE MATERIAL FOR THE PROPOSED ENTRANCES. THIS MATERIAL SHALL GENERALLY BE USED TO WIDEN ANY EXISTING RETURN OR TO CONSTRUCT NEW
5. ENTRANCES WHERE NONE NOW EXISTS.
6. THE AGGREGATE BASE COURSE SHALL BE CONSTRUCTED 12" (300 mm) WIDER THAN THE SURFACE DIMENSIONS AS SHOWN ABOVE.
7. EXISTING FIELD ENTRANCES OF AGGREGATE OR EARTH WITH NO HMA APRON SHALL NOT RECEIVE A NEW HMA APRON WITHOUT PROPER APPROVAL THROUGH THE BUREAU OF OPERATIONS "POLICY ON PERMITS FOR ACCESS DRIVEWAYS TO STATE HIGHWAYS".

   TO ASSURE APPROPRIATE ACCESS POLICIES ARE FOLLOWED ALL NEW ACCESS SHALL BE APPLIED FOR THROUGH THE BUREAU OF OPERATIONS PERMIT APPLICATION PROCESS. PLAN PREPARATION MEMORANDUMS 40-09 ALONG WITH DISTRICT PROJECT IMPLEMENTATION MEMO 104/01 DISCUSS THIS PROCEDURE.

RURAL ENTRANCE DESIGN STANDARDS (PPM 40-09)

	NEW CONSTRUCTION & 3R with CONSTRUCTION								3R w/out RECONSTRUCTION, 3P, SMART & CM					
	NONCOMMERCIAL					COMMERCIAL			NONCOMMERCIAL			COMMERCIAL		
	PRIVATE & FIELD			FIELD W/FARM IMPLEMENTS					PRIVATE & FIELD					
DESIGN ELEMENT	min.	des.	max.	min.	max.	min.	des.	max.	min.	des.	max.	min.	des.	max.
SURFACE WIDTH (FT)	12	16	24	24	30	1 LANE, 1 WAY						1 LANE, 1 WAY		
						14	16	24						
						2 LANE, 2 WAY						2 LANE, 2 WAY		
						24	30	35	resurface existing configuration; existing aggregate or earth entrances shall have the continuation of aggregate shoulders placed behind them					
RADIUS (FT)	15	25	40	30		20	30	50						
SHOULDER WIDTH (FT)	2	2		2		1	3							
SHOULDER SLOPE (%)	2	4	6	4		2	4	6						
ENTRANCE GRADE (%)	0	2 to 5	10 or 12	2 to 5	10 or 12	0	2 to 5	8 or 10						
SIDE SLOPE (FT)	1:10	1:6	1:4	1:6	1:4	1:10	1:6	1:4						
SURFACE TYPE														
INCIDENTAL HMA SURFACING (INCH)		2		2		3 or 4			taper from hma resurfacing thickness (2 1/2", 2 1/4" or 1 1/2") to 1 1/2" to minimize aggregate shoulder					
AGGREGATE SURFACE COURSE, TYPE B (INCH)		6		6		8			if applicable, use items: Preparation of Base & Aggregate Base Repair; see PPM 30-02					
PCC DRIVEWAY PAVEMENT (INCH)		6						6 or 8						

Note: All dimensions are in INCHES (millimeters) unless otherwise shown.

DISTRICT 5 DETAIL NO. 40800050C

F.A. RTE.	SECTION	COUNTY	TOTAL SHEETS	SHEET NO.
*	(55/56)RS-5,57-1(1)RS-1	MCLEAN	85	77
		CONTRACT NO. 70G11		
		ILLINOIS	FED. AID PROJECT	

WILLETT HOFMANN & ASSOCIATES INC
PROFESSIONAL DESIGN FIRM 184-001314
801 EAST ONEIDA STREET, O'NEIL, IL 61761-1630
T: 815 284 3381 DESIGNFIRM: 184 000918

USER NAME = afull	DESIGNED - AMF	REVISED -	
	DRAWN - TJA	REVISED -	
PLOT SCALE = 0.16666633 ' / in.	CHECKED - GFS	REVISED -	
PLOT DATE = 3/5/2024	DATE -	REVISED -	

STATE OF ILLINOIS
DEPARTMENT OF TRANSPORTATION

PRIVATE COMMERCIAL ENTRANCE
(NONCOMMERCIAL AND COMMERCIAL RURAL)

SCALE: | SHEET 2 OF 2 SHEETS | STA. | TO STA.

MODEL: Border
FILE NAME: S:\PROJECTS\2023\1371D23_IDOT\DS\WO 1 Contract 70G11\DESIGN_70G11\CAD_Sheets\WHAIDS70G11_Border.dgn

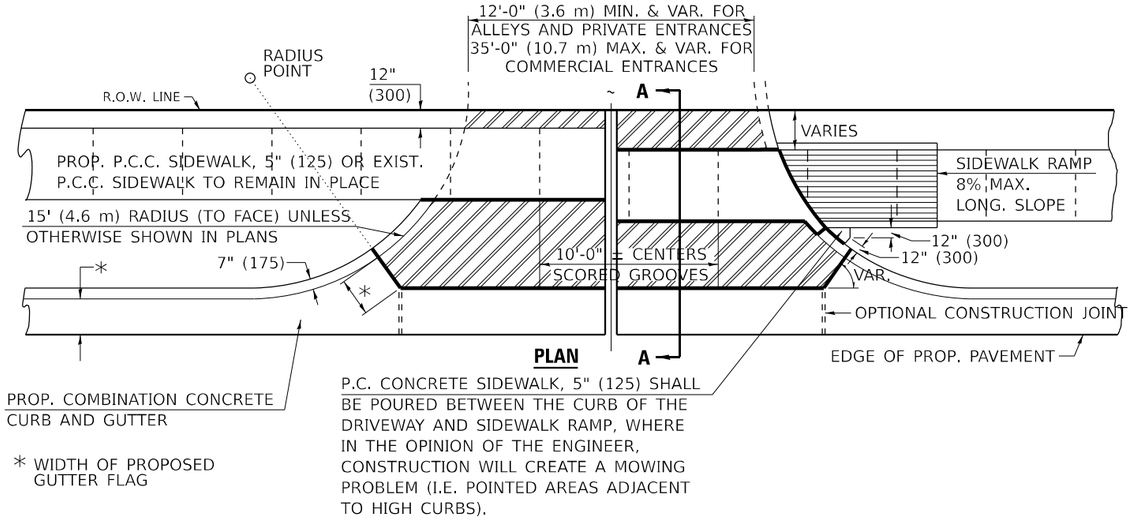

LEGEND

PROP. P.C. CONCRETE DRIVEWAY PAVEMENT

LONGITUDINAL CURB EXPANSION JOINT

NOTE: SIDEWALK RAMPS SHALL BE CONSTRUCTED AT COMMERCIAL ENTRANCES. AT PRIVATE ENTRANCES RAMPS SHALL USUALLY BE NEEDED WHERE NARROW BOULEVARDS OR RADII GREATER THAN 15' (4.6 m) ARE CONSTRUCTED. THE BACK CURB RAMPS AT PRIVATE ENTRANCES MAY BE ELIMINATED IF GRADING CAN BE ACCOMPLISHED WITHOUT THE CURB.

NOTE: THE ENTRANCE WIDTHS SHOWN ON THE PLANS SHALL BE INTERPRETED TO BE THE WIDTHS AT THE COMPLETED RADIUS, WHICH MAY BE LOCATED BEHIND THE R.O.W. LINE.

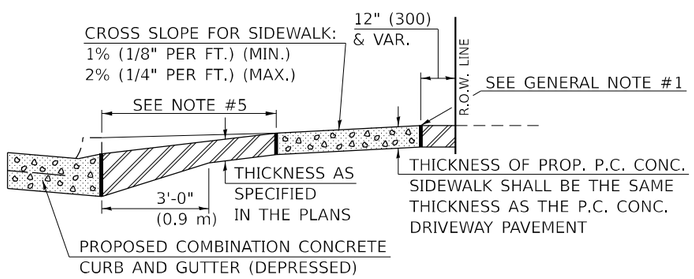

SECTION A–A WITH POSITIVE GRADE

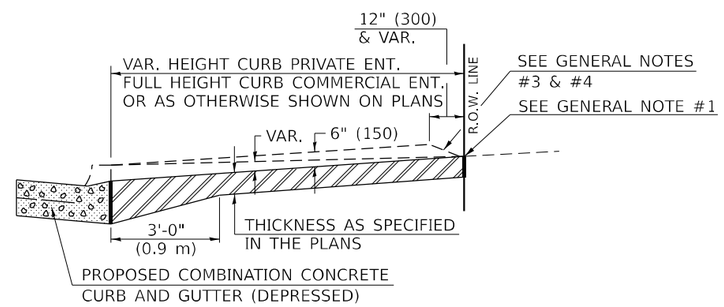

SECTION A–A WITHOUT SIDEWALK

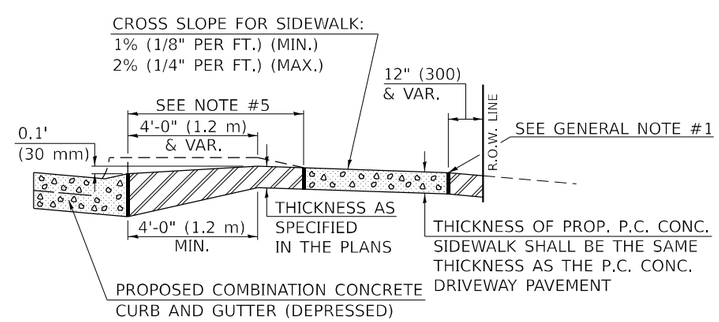

SECTION A–A WITH NEGATIVE GRADE

URBAN ENTRANCE DESIGN STANDARDS (PPM 40-09)												
	NEW CONSTRUCTION & 3R with CONSTRUCTION						3R w/out RECONSTRUCTION, 3P, SMART & CM					
	NONCOMMERCIAL			COMMERCIAL			NONCOMMERCIAL			COMMERCIAL		
DESIGN ELEMENT	min.	des.	max.	min.	des.	max.	min.	des.	max.	min.	des.	max.
SURFACE WIDTH (FT)	12	12 or 14	24	1 LANE, 1 WAY 14	 16	 24				1 LANE, 1 WAY 2 LANE, 2 WAY		
		with		2 LANE, 2 WAY 24	 30	 35	resurface existing configuration; existing hma or pcc entrances shall have "butt joints" constructed; existing aggregate or earth entrances shall have the continuation of aggregate shoulders placed behind them					
RADIUS (FT)	12	15 or 12	25	15	30	40						
ENTRANCE GRADE (%)	0	2 to 5	8	0	2 to 4	6						
SURFACE TYPE												
INCIDENTAL HMA SURFACING (INCH)				3 or 4			taper from hma resurfacing thickness (2 1/2", 2 1/4" or 1 1/2") to 1 1/2" for "butt joints" and to minimize aggregate shoulder					
AGGREGATE SURFACE COURSE, TYPE A (INCH)				8			if applicable, use items: Preparation of Base & Aggregate Base Repair; see PPM 30-02					
PCC DRIVEWAY PAVEMENT (INCH)	3	6			6 or 8							

GENERAL NOTES

1. THIS LONGITUDINAL CURB EXPANSION JOINT SHALL BE PLACED ONLY WHERE THE PROPOSED P.C. CONCRETE SIDEWALK OR DRIVEWAY PAVEMENT MEETS AN EXISTING CONCRETE ENTRANCE. THE P.C.C. DRIVEWAY PAVEMENT WILL BE POURED MONOLITHIC WITH THE P.C.C. SIDEWALK WHEN THE DISTANCE BETWEEN THE SIDEWALK AND RIGHT-OF-WAY IS LESS THAN OR EQUAL TO 24" (600 mm). THE LONGITUDINAL EXPANSION JOINT BETWEEN THE DRIVEWAY PAVEMENT AND SIDEWALK WILL NOT BE NEEDED UNLESS THE DISTANCE EXCEEDS 24" (600 mm).
2. THE LONGITUDINAL CURB EXPANSION JOINT SHALL CONFORM TO SECTION 1051 OF THE STANDARD SPECS.
3. DRIVEWAYS THAT WILL MEET EXISTING OR PROPOSED CURB NEAR THE R.O.W. LINE SHALL HAVE THE CURB CONSTRUCTED FULL HEIGHT TO THE R.O.W. LINE.
4. DRIVEWAYS THAT WILL BE CONSTRUCTED WITH FULL HEIGHT CURBS AND NOT MEETING EXISTING OR PROPOSED CURBS NEAR THE R.O.W. LINE SHALL HAVE THE CURB SLOPED AS SHOWN ABOVE.
5. DEPRESSED CURB SHALL BE BUILT ONLY AT PRIVATE DRIVES WITH NO SIDEWALK RAMPS.
6. THE ENTRANCE GRADES WILL BE AS SHOWN ON THE STATION CROSS SECTIONS AND AS DIRECTED BY THE ENGINEER.
7. THE P.C. CONCRETE DRIVEWAY PAVEMENT SHALL BE CONSTRUCTED WITH SCORED GROOVES, AS SPECIFIED IN ARTICLE 424.06 OF THE STANDARD SPECIFICATIONS, AT APPROXIMATELY EVERY OTHER JOINT, EITHER IN THE EXISTING SIDEWALK OR THE PROPOSED SIDEWALK. THE PROPOSED P.C. CONCRETE SIDEWALK SHALL BE CONSTRUCTED PRIOR TO CONSTRUCTING THE P.C. CONC. DRIVEWAY PAVEMENT AND NO ADDITIONAL COMPENSATION WILL BE ALLOWED.
8. THE COMBINATION CONCRETE CURB AND GUTTER SHALL BE CONSTRUCTED AS SHOWN AND WILL BE PAID FOR AT THE CONTRACT UNIT PRICE PER LIN.FT. (METER) FOR COMBINATION CONCRETE CURB AND GUTTER OF THE TYPE SPECIFIED IN THE PLANS AND NO ADDITIONAL COMPENSATION WILL BE ALLOWED.
9. THE P.C. CONCRETE SIDEWALK SHALL BE CONSTRUCTED AS SHOWN ABOVE AND WILL BE PAID FOR AT THE CONTRACT UNIT PRICE PER SQ.FT. (m^2) FOR P.C. CONCRETE SIDEWALK OF THE THICKNESS SPECIFIED IN THE PLANS AND NO ADDITIONAL COMPENSATION WILL BE ALLOWED FOR THE EXTRA THICKNESS AS SHOWN ABOVE OR THE SEQUENCE OF CONSTRUCTION AS SPECIFIED.
10. BEFORE A CHANGE IN THE METHOD OF CONSTRUCTION IS ALLOWED, THE REQUEST SHALL BE SUBMITTED IN WRITING AND MUST BE APPROVED BY THE ENGINEER.
11. THE VARIABLE HEIGHT CURB ADJACENT TO THE P.C. CONCRETE DRIVEWAY PAVEMENT SHALL BE CONSTRUCTED MONOLITHIC WITH AND INCLUDED IN THE AREA OF THE P.C. CONCRETE DRIVEWAY PAVEMENT OF THE THICKNESS SPECIFIED IN THE PLANS. THIS WORK WILL BE PAID FOR AT THE CONTRACT UNIT PRICE PER SQ.YD. (m^2) FOR P.C. CONCRETE DRIVEWAY PAVEMENT OF THE THICKNESS SPECIFIED IN THE PLANS, INCLUDING THE MONOLITHIC CURBS AS SPECIFIED, THE SCORED GROOVES, THE LONGITUDINAL CURB EXPANSION JOINTS, AND THE ADDITIONAL THICKNESS REQUIRED ADJACENT TO THE DEPRESSED COMBINATION CONCRETE CURB AND GUTTER, AND NO ADDITIONAL COMPENSATION WILL BE ALLOWED.

Note: All dimensions are in INCHES (millimeters) unless otherwise shown.

DESIGNER NOTE:

MODEL: Border
FILE NAME: S:\PROJECTS\2023\1371D23_IDOT\DS\WO 1 Contract 70G11\DESIGN_70G11\CAD_Sheets\WHAID570G11_Border.dgn

WILLETT HOFMANN & ASSOCIATES INC
PROFESSIONAL DESIGN FIRM 184-001015
309 EAST PARSONS STREET, CHICAGO, ILLINOIS 60601
T 815 284 3381 DESIGN FIRM: # 184-000918

USER NAME = afull	DESIGNED - AMF	REVISED -	
	DRAWN - TJA	REVISED -	
PLOT SCALE = 0.16666633 ' / in.	CHECKED - GFS	REVISED -	
PLOT DATE = 3/5/2024	DATE -	REVISED -	

STATE OF ILLINOIS
DEPARTMENT OF TRANSPORTATION

DRIVEWAY PAVEMENT PCC) (NON & COMMERCIAL URBAN)

SCALE: | SHEET 1 OF 1 SHEETS | STA. | TO STA.

DISTRICT 5 DETAIL NO. 42300AAA

F.A. RTE.	SECTION	COUNTY	TOTAL SHEETS	SHEET NO.
*	(55/56)RS-5,57-1(1)RS-1	MCLEAN	85	78
		CONTRACT NO. 70G11		
	ILLINOIS	FED. AID PROJECT		

NON–COMMERCIAL AND COMMERCIAL URBAN

(WITH 0' TO 2 1/2' (0 mm TO 760 mm) FROM BACK OF CURB TO SIDEWALK)

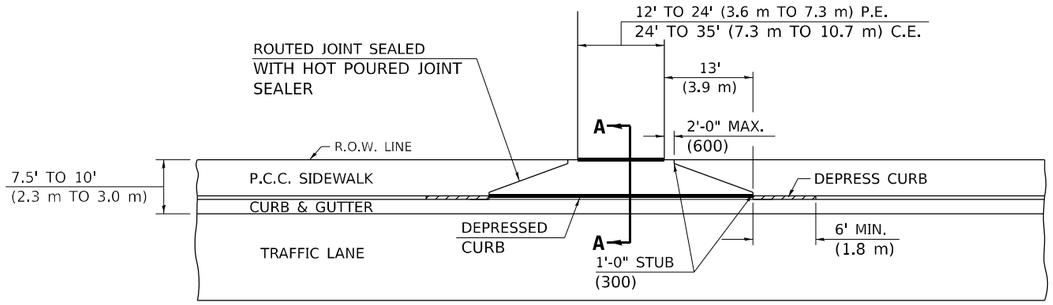

PLAN WITHOUT BOULEVARD

PREFORMED EXPANSION JOINT (FIBER BOARD)

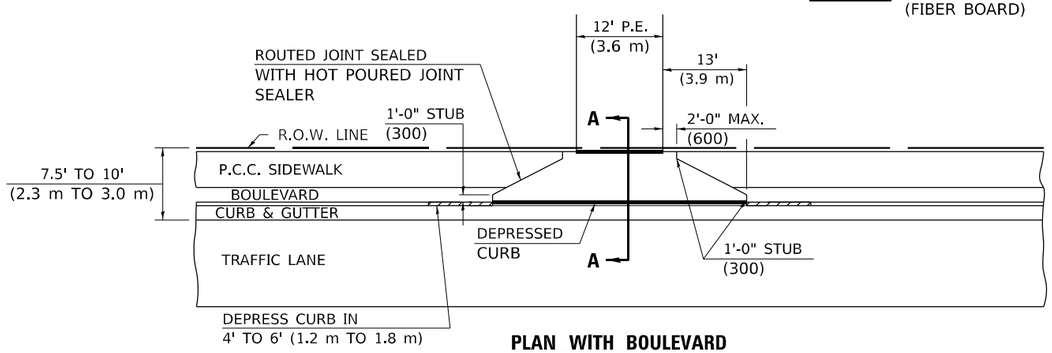

PLAN WITH BOULEVARD

10' TO 15' (3 m TO 4.6 m) FROM TRAVELLED LANE TO RIGHT OF WAY

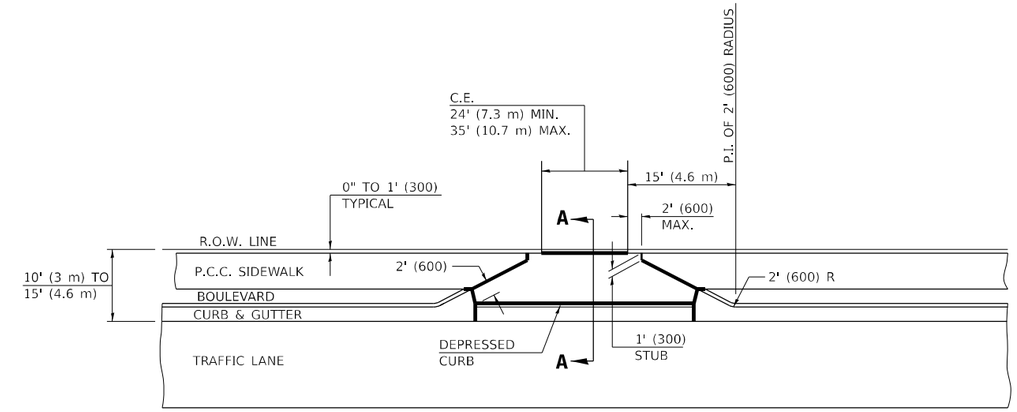

PREFORMED EXPANSION JOINT (FIBER BOARD)

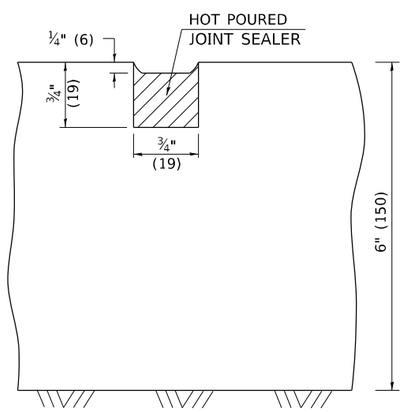

DETAIL OF SAWED OR ROUTED JOINT

THICKEN SIDEWALK TO 6" (150 mm) (MIN.) WITHIN LIMITS OF DEPRESSED CURB.

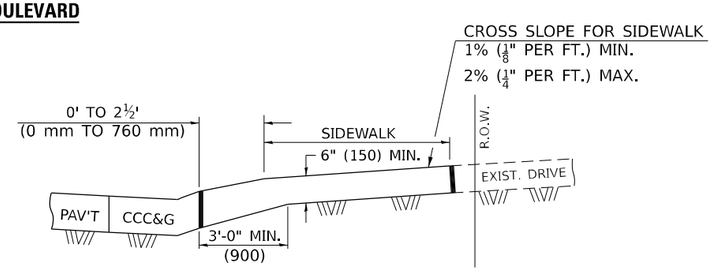

SECTION A–A

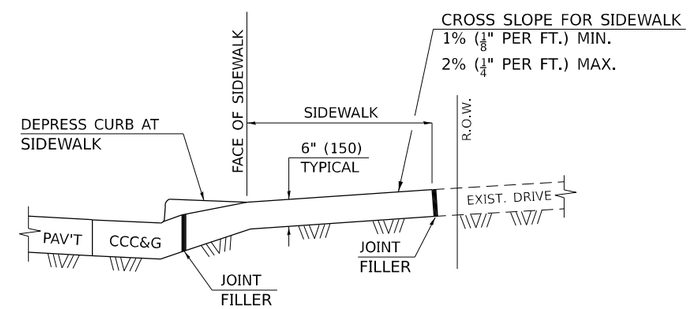

SECTION A–A
WITH SIDEWALK

NOTE: WHEN EXISTING SIDEWALK IS TO REMAIN IN PLACE, THE JOINT FILLER IS TO BE PLACED AT THE FACE OF SIDEWALK.

NOTE: THICKEN SIDEWALK FROM 5" (125) TO MATCH ADJACENT DRIVEWAY PAVEMENT THICKNESS WITHIN LIMITS OF DRIVEWAY FLARE [15' (4.6 m) EITHER SIDE OF DRIVEWAY].

GENERAL NOTES

1. THIS LONGITUDINAL CURB EXPANSION JOINT SHALL BE PLACED ONLY WHERE THE PROPOSED P.C. CONCRETE SIDEWALK OR DRIVEWAY PAVEMENT MEETS AN EXISTING CONCRETE ENTRANCE.
2. THE LONGITUDINAL CURB EXPANSION JOINT SHALL CONFORM TO SECTION 1051 OF THE STANDARD SPECIFICATIONS.
3. THICKEN SIDEWALK FROM 5" (125) TO MATCH ADJACENT DRIVEWAY PAVEMENT THICKNESS WITHIN DRIVEWAY LIMITS OF DRIVEWAY.

Note: All dimensions are in INCHES (millimeters) unless otherwise shown.

DESIGNER NOTE: FOR P.E. WITH DISTANCE FROM EDGE OF TRAVEL LANE 10' AND 17' (3.0 m TO 5.2 m) USE 15' (4.6 m) RADIUS AND TRUNCATE AT BACK OF SIDEWALK.

FOR C.E. WITH DISTANCE FROM EDGE OF TRAVELLED LANE BETWEEN 15' (4.6 m) AND 17' (5.2 m) USE 15' (4.6 m) OR 20' (6.1 m) RADIUS AND TRUNCATE AT BACK OF SIDEWALK.

SEE PLAN PREPARATION MEMORANDUM 40-09

MODEL: Border
FILE NAME: S:\PROJECTS\2023\1371D23_IDOTD5\WO 1 Contract 70G11\DESIGN_70G11\CAD_Sheets\IHAD570G11_Border.dgn

WILLETT HOFMANN & ASSOCIATES INC
ENGINEERING · SURVEYING · LAND SCAPING
801 EAST 26th STREET, LOMBARD, ILLINOIS 60148
T: 630-268-3081 DESIGN FIRM: # 184-000918

USER NAME = afull	DESIGNED - AMF	REVISED -	
	DRAWN - TJA	REVISED -	
PLOT SCALE = 0.16666633 ' / in.	CHECKED - GFS	REVISED -	
PLOT DATE = 3/5/2024	DATE -	REVISED -	

STATE OF ILLINOIS
DEPARTMENT OF TRANSPORTATION

ENTRANCES WITH NARROW R.O.W.

SCALE: | SHEET 1 OF 1 SHEETS | STA. | TO STA.

DISTRICT 5 DETAIL NO. 42300BBB

F.A. RTE.	SECTION	COUNTY	TOTAL SHEETS	SHEET NO.
*	(55/56)RS-5,57-1(1)RS-1	MCLEAN	85	79
		CONTRACT NO. 70G11		
		ILLINOIS FED. AID PROJECT		

ROAD CLOSURE

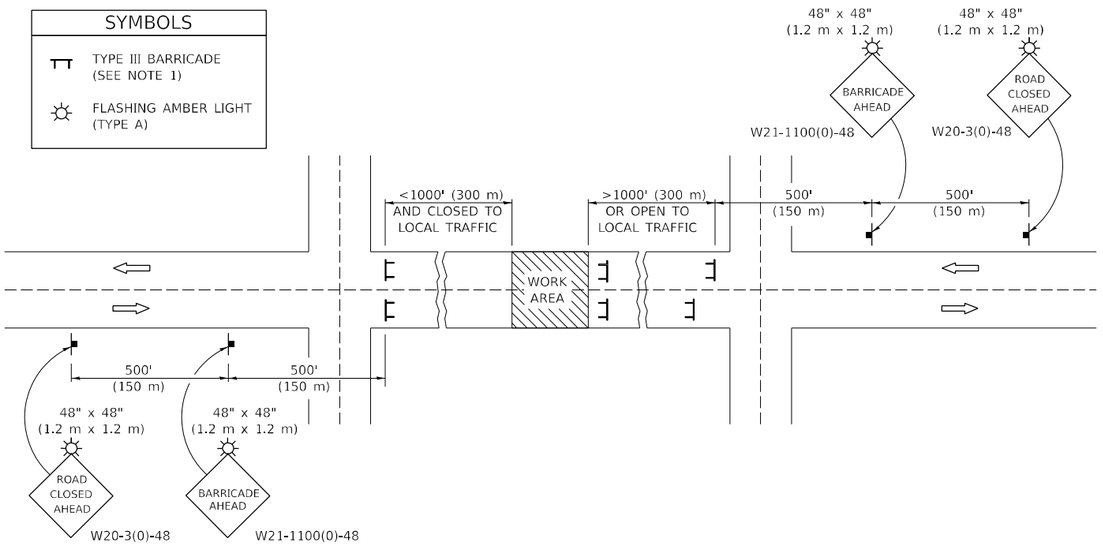

GENERAL NOTES

1. TYPE III BARRICADES SHALL BE AS SHOWN ON STANDARD 701901 "TYPICAL APPLICATIONS OF TYPE III BARRICADES CLOSING A ROAD". EACH TYPE III BARRICADE SHALL HAVE TWO FLASHING AMBER LIGHTS MOUNTED ABOVE IT.
2. IF THE ROAD IS OPEN TO LOCAL TRAFFIC OR EXCEEDS 1000' (300 m), ANOTHER SET OF TYPE III BARRICADES, EQUIPPED AS IN NOTE 1 ABOVE, SHALL BE PLACED AT EACH END OF THE WORK AREA.
3. WHEN A STOP CONDITION EXISTS, NO SIGNS ARE REQUIRED IN ADVANCE OF THE "STOP" SIGN WHEN THE ROAD IS CLOSED WITHIN 100' (30 m) OF THE INTERSECTION.
4. STANDARD 701901 SHALL APPLY FOR THE PLACEMENT & DESIGN OF TYPE III BARRICADES.
5. IF A TYPE III BARRICADE WITH AN ATTACHED SIGN PANEL WHICH MEETS NCHRP 350 IS NOT AVAILABLE, THE SIGNS MAY BE MOUNTED ON AN NCHRP 350 TEMPORARY SIGN SUPPORT DIRECTLY IN FRONT OF THE BARRICADE.
6. REFLECTORIZED STRIPING SHALL APPEAR ON BOTH SIDES OF THE TY III BARRICADES IF ROAD IS OPEN TO LOCAL TRAFFIC.
7. ALL SIGNS SHALL BE POST MOUNTED IF THE CLOSURE TIME EXCEEDS FOUR DAYS.
8. A MINIMUM OF TWO FLASHING LIGHTS SHALL BE USED AT NIGHT ON EACH APPROACH IN ADVANCE OF THE WORK AREA. FLASHING LIGHTS SHALL BE INSTALLED ABOVE THE FIRST TWO SIGNS IN THE SERIES.
9. LONGITUDINAL DIMENSIONS MAY BE ADJUSTED SLIGHTLY TO FIT FIELD CONDITIONS.
10. FORMS BT. 725 AND BT. 726 ARE REQUIRED.
11. WHEN A SIDEROAD INTERSECTS THE HIGHWAY ON WHICH WORK IS BEING PERFORMED, ADDITIONAL TRAFFIC DEVICES SHALL BE ERECTED AND PROVIDED AS DIRECTED BY THE ENGINEER.
12. AN ADDITIONAL SIGN MAY BE REQUIRED AT A MAJOR INTERSECTING ROAD IN ADVANCE OF THE CLOSURE. THE ADDITIONAL SIGN SHALL GIVE THE DISTANCE TO THE BARRICADE IN MILES OR FRACTIONS OF A MILE.

SIDEROAD / STREET CLOSURE

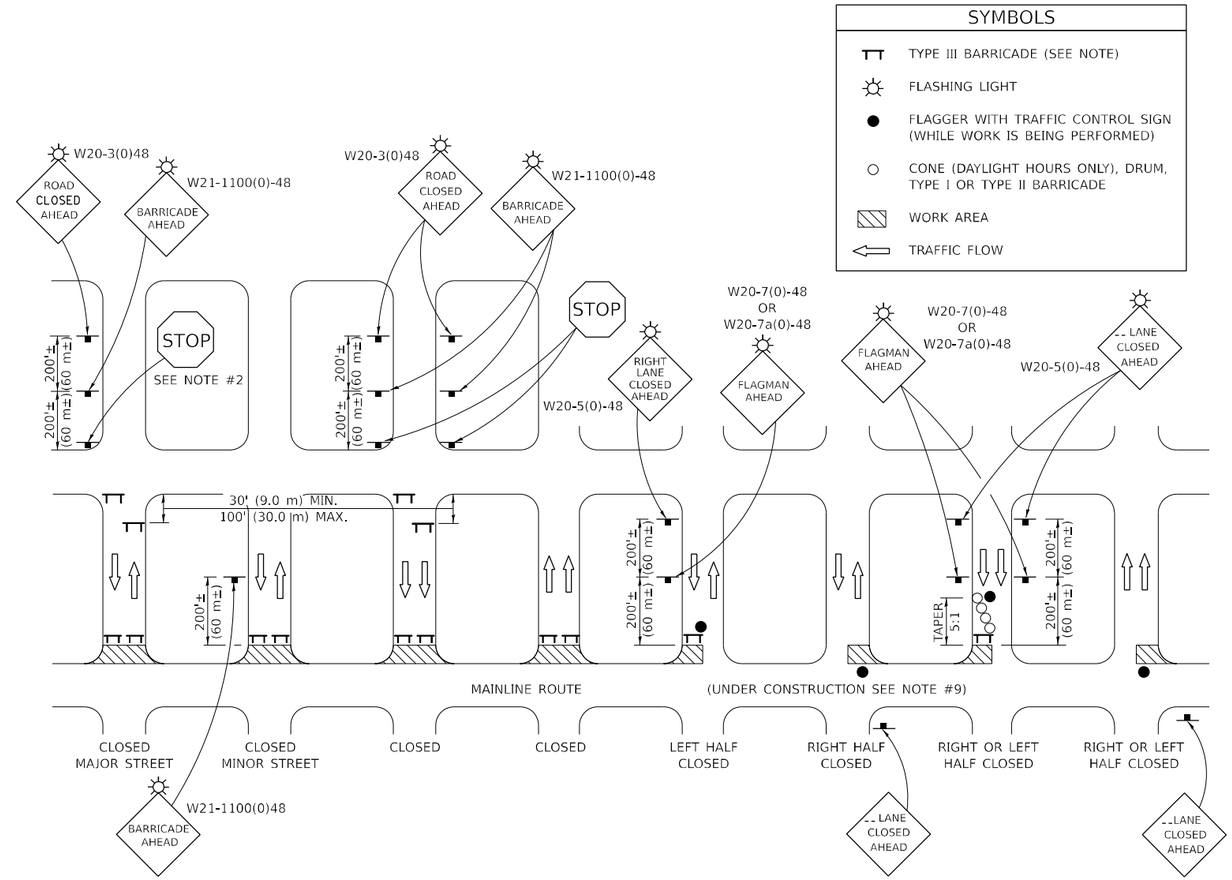

GENERAL NOTES

1. TYPE III BARRICADES SHALL BE AS SHOWN ON "TYPICAL APPLICATIONS OF TYPE III BARRICADES CLOSING A ROAD". EACH TYPE III BARRICADE SHALL HAVE TWO FLASHING AMBER LIGHTS MOUNTED ABOVE IT.
2. WHERE A STOP CONDITION EXISTS, AS SHOWN ABOVE, WARNING SIGNS MAY BE OMITTED IN ADVANCE OF THE "STOP" SIGN.
3. STANDARD 701901 SHALL APPLY FOR THE PLACEMENT & MANUFACTURE OF TYPE III BARRICADES.
4. ALL SIGNS SHALL BE POST MOUNTED IF THE CLOSURE TIME EXCEEDS FOUR DAYS.
5. ONE FLASHING LIGHT IS REQUIRED ABOVE EACH ADVANCE WARNING SIGN DURING HOURS OF DARKNESS.
6. LONGITUDINAL DIMENSIONS MAY BE ADJUSTED SLIGHTLY TO FIT FIELD CONDITIONS.
7. FORMS BT 725 AND BT 726 ARE REQUIRED.
8. THE MAINLINE ROUTE TEMPORARY TRAFFIC CONTROL SHALL BE IN ACCORDANCE WITH THE PLANS, SPECIAL PROVISIONS AND STANDARD SPECIFICATIONS.
9. ALL FLAGGERS REQUIRED AT SIDE ROADS AND ENTRANCES REMAINING OPEN TO TRAFFIC AND/OR ADDITIONAL BARRICADES REQUIRED BY THE ENGINEER TO CLOSE SIDE ROADS AND ENTRANCES WILL BE PAID FOR ACCORDING TO ARTICLE 109.04.

Note: All dimensions are in INCHES (millimeters) unless otherwise shown.

DISTRICT 5 DETAIL NO. 70200000

MODEL: Border
FILE NAME: S:\PROJECTS\2023\1371D23_IDOT\DS\WO 1 Contract 70G11\DESIGN_70G11\CAD_Sheets\WHAID570G11_Border.dgn

WILLETT HOFMANN & ASSOCIATES INC
PROFESSIONAL DESIGN FIRM - LICENSE NO. 184-001008
809 EAST 2ND STREET, DIXON, IL 61021-0367
T: 815 284 3381 DESIGNFIRM: 815 960918

USER NAME = afull	DESIGNED - AMF	REVISED -	
	DRAWN - TJA	REVISED -	
PLOT SCALE = 0.16666633 ' / in.	CHECKED - GFS	REVISED -	
PLOT DATE = 3/5/2024	DATE -	REVISED -	

STATE OF ILLINOIS
DEPARTMENT OF TRANSPORTATION

TRAFFIC CONTROL & PROTECTION DEVICES (ROAD & SIDEROAD / STREET CLOSURES)

SCALE: SHEET 1 OF 1 SHEETS STA. TO STA.

F.A. RTE.	SECTION	COUNTY	TOTAL SHEETS	SHEET NO.
*	(55/56)RS-5,57-1(1)RS-1	MCLEAN	85	80
		CONTRACT NO. 70G11		
	ILLINOIS	FED. AID PROJECT		

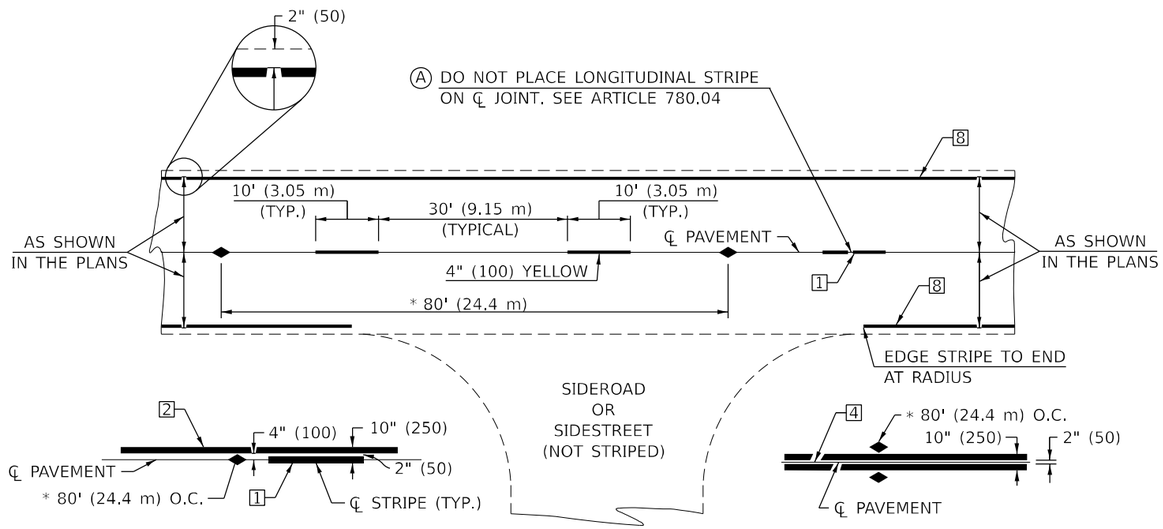

SINGLE NO PASSING

DOUBLE NO PASSING

* REDUCE TO 40' (12.2 m) O.C. ON CURVES WITH POSTED OR ADVISORY SPEEDS OF 45 mph (70 km/h) OR LESS.

TWO LANE/TWO WAY

TYPICAL PAVEMENT MARKING LEGEND

1. 4" (100) SKIP-DASH (YELLOW)
2. 4" (100) SOLID (YELLOW)
3. 12" (300) DIAGONAL (YELLOW)
4. 4" (100) DOUBLE YELLOW (NARROW)
5. RESERVED
6. RESERVED
7. 4" (100) SKIP-DASH (WHITE)
8. 4" (100) SOLID (WHITE)
9. 12" (300) DIAGONAL (WHITE)
10. 6" (150) SOLID (WHITE)
11. 24" (600) STOP BAR (WHITE)
12. 8" (200) SOLID (WHITE)
13. 4" (100) LANE LINE EXTENSIONS (WHITE)
14. 4" (100) PARKING WHITE

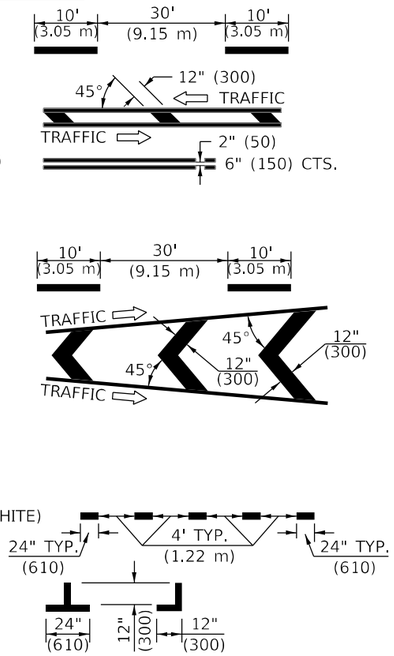

TYPICAL PAVEMENT MARKERS LEGEND

- ◆ TWO-WAY AMBER MARKER
- ▶ ONE-WAY AMBER MARKER
- ▷ ONE-WAY CRYSTAL MARKER

RURAL LEFT TURN

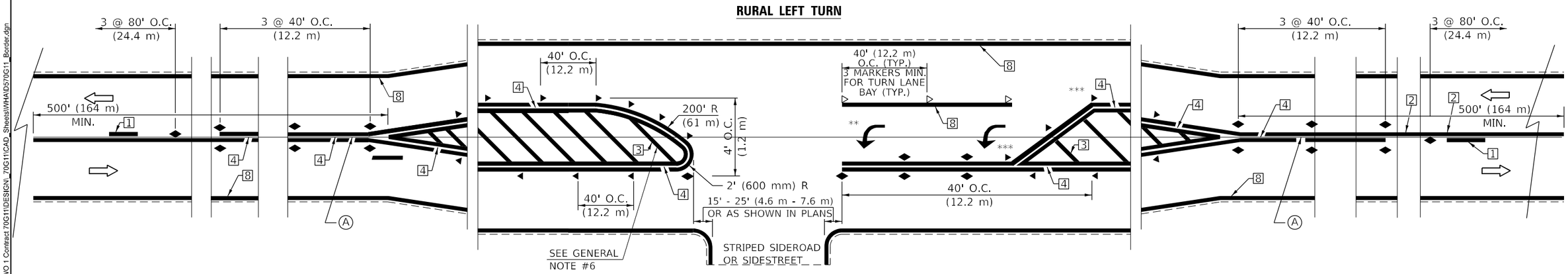

*** REDUCE SPACING IF NECESSARY TO ASSURE MARKERS AT CORNER POINTS.

** TURN ARROWS SHALL BE PLACED AS SHOWN ON SHEET #2.

Note: All dimensions are in INCHES (millimeters) unless otherwise shown.

DISTRICT 5 DETAIL NO. 7800AAAA

F.A. RTE.	SECTION	COUNTY	TOTAL SHEETS	SHEET NO.
*	(55/56)RS-5,57-1(1)RS-1	MCLEAN	85	81
		CONTRACT NO. 70G11		
		ILLINOIS	FED. AID PROJECT	

WILLETT HOFMANN & ASSOCIATES INC
809 EAST 200 STREET, SUITE 3, OTTAWA, IL 61350-6367
T: 815-434-3181 FACSIMILE: 815-433-0918

USER NAME = afull	DESIGNED - AMF	REVISED -	
	DRAWN - TJA	REVISED -	
PLOT SCALE = 0.16666633 ' / in.	CHECKED - GFS	REVISED -	
PLOT DATE = 3/5/2024	DATE -	REVISED -	

STATE OF ILLINOIS
DEPARTMENT OF TRANSPORTATION

PAVEMENT MARKING AND MARKERS
(RURAL & URBAN APPLICATIONS)

SCALE: SHEET 1 OF 4 SHEETS STA. TO STA.

MODEL: Border
FILE NAME: S:\PROJECTS\2023\1371D23_IDOT D5\WO 1 Contract 70G11\DESIGN_70G11\CAD_Sheets\WHAD570G11_Border.dgn

URBAN LEFT TURN

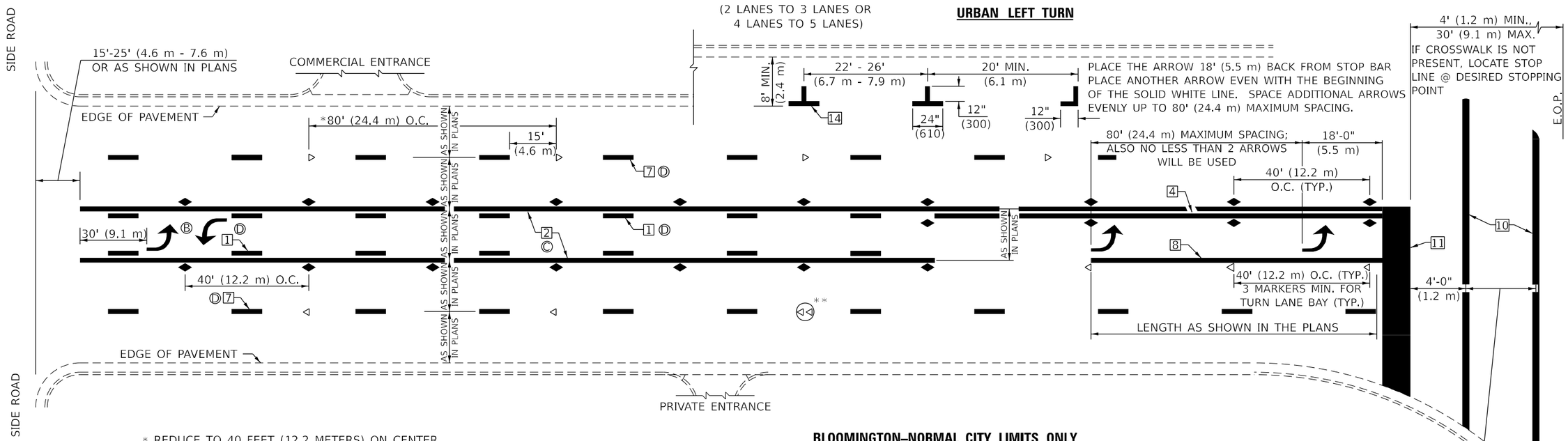

* REDUCE TO 40 FEET (12.2 METERS) ON CENTER ON CURVES WHERE ADVISORY SPEEDS ARE 10 MPH (15 km/h) LOWER THAN POSTED SPEEDS.

** DOUBLE LANE LINE MARKERS SHALL BE SPECIFIED AND SPACED AS SHOWN IN HIGHWAY STANDARD 781001 FOR MULTI-LANE DIVIDED AND UNDIVIDED HIGHWAYS.

BLOOMINGTON–NORMAL CITY LIMITS ONLY

CROSSWALK WIDTH 6'-0" (1.8 m)
OR AS SHOWN IN THE PLANS

GENERAL NOTES:

Ⓑ TURN ARROW PAIRS SHALL BE PLACED AT 250' (75 m) INTERVALS AND SHALL BE EVENLY SPACED BETWEEN BOTH ENDS OF THE BIDIRECTIONAL LEFT TURN LANE.

Ⓒ THE SOLID YELLOW PAVEMENT MARKINGS 2 SHOULD GENERALLY START OR END NEAR THE RADIUS POINT OF EACH STREET RETURN EXCEPT WHERE ONE OR BOTH ENDS WOULD INCLUDE STOP BARS.

Ⓓ THE SKIP-DASH PAVEMENT MARKINGS 1 OR 7 SHOULD BE CENTERED BETWEEN BOTH ENDS OF EACH CITY BLOCK AND SHALL BE PLACED SO THEY LINE UP ACROSS FROM EACH OTHER. SEE EXAMPLE ON SHEET 2 OF 3.

Ⓔ USE LARGE ARROW SIZE FOR BOTH RURAL AND URBAN LOCATIONS. (SEE LAST PAGE OF SECTION 780x FOR SYMBOLS TABLE)

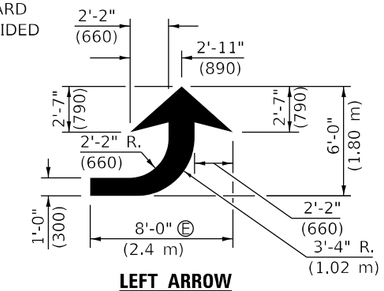

LEFT ARROW

REVERSE FOR RIGHT ARROW
AREA = 15.6 SQ. FT. (1.47 m^2)
(WHITE)

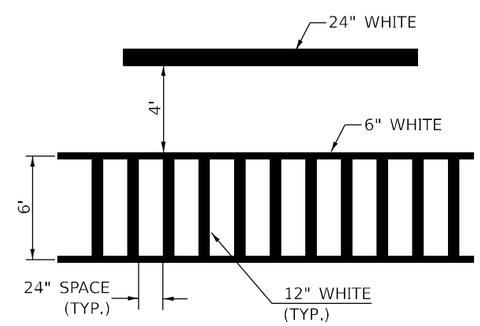

TYPICAL SPACING FOR CROSSWALKS & STOP BARS

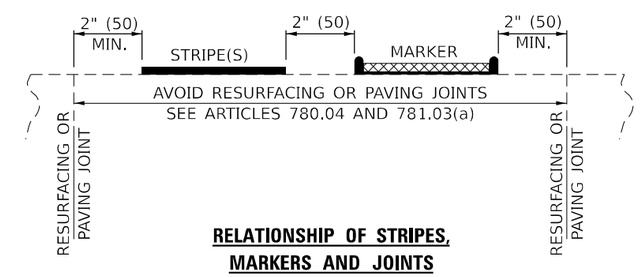

RELATIONSHIP OF STRIPES, MARKERS AND JOINTS

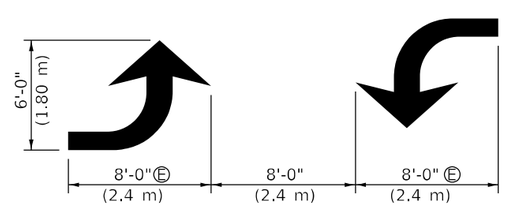

TYPICAL DOUBLE TURN ARROWS (WHITE)

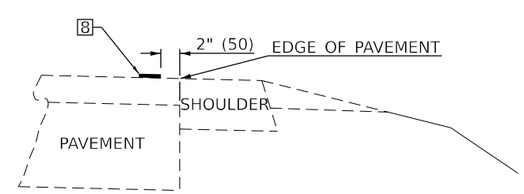

RELATIONSHIP OF EDGE LINE TO EDGE OF PAVEMENT

(SAFETY SHOULDER OR PAVED SURFACE)
SEE ARTICLE 780.04

Note: All dimensions are in INCHES (millimeters) unless otherwise shown.

DISTRICT 5 DETAIL NO. 7800AAAA

F.A. RTE.	SECTION	COUNTY	TOTAL SHEETS	SHEET NO.
*	(55/56)RS-5,57-1(1)RS-1	MCLEAN	85	82
		CONTRACT NO. 70G11		
		ILLINOIS	FED. AID PROJECT	

WILLETT HOFMANN & ASSOCIATES INC
PROFESSIONAL DESIGN FIRM 184-001996
801 EAST ONEIDA STREET, OSWEGO, ILLINOIS 60543
T 815 284 3381 DESIGN FIRM: 184-001996

USER NAME = afull	DESIGNED - AMF	REVISED -	
	DRAWN - TJA	REVISED -	
PLOT SCALE = 0.16666633 ' / in.	CHECKED - GFS	REVISED -	
PLOT DATE = 3/5/2024	DATE -	REVISED -	

STATE OF ILLINOIS
DEPARTMENT OF TRANSPORTATION

PAVEMENT MARKING AND MARKERS
(RURAL & URBAN APPLICATIONS)

SCALE: SHEET 2 OF 4 SHEETS STA. TO STA.

MODEL: Border
FILE NAME: S:\PROJECTS\2023\1371D23_IDOTD5\WO 1 Contract 70G11\DESIGN_70G11\CAD_Sheets\WHAID570G11_Border.dgn

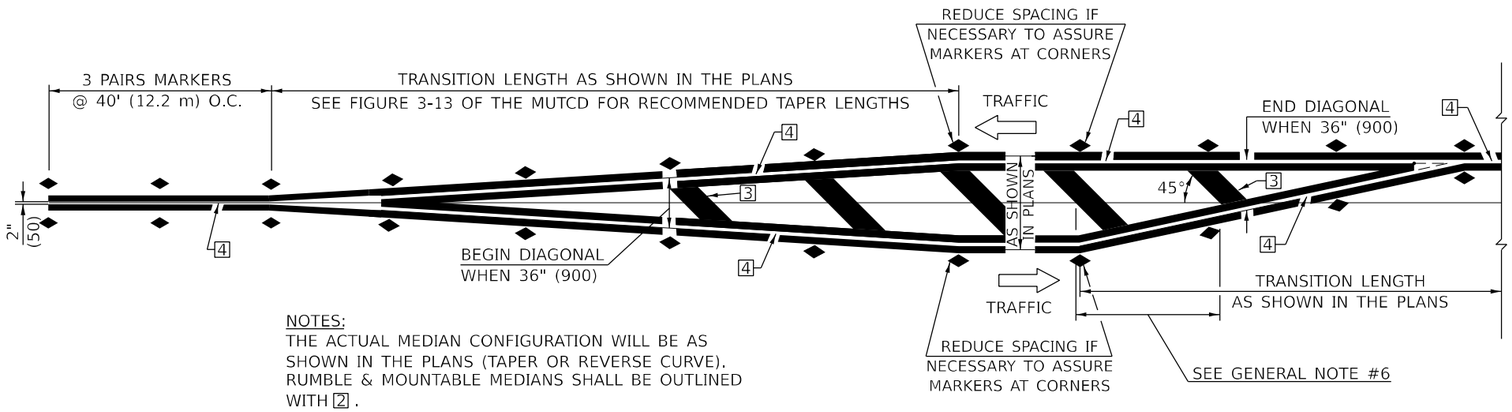

NOTES:
THE ACTUAL MEDIAN CONFIGURATION WILL BE AS SHOWN IN THE PLANS (TAPER OR REVERSE CURVE). RUMBLE & MOUNTABLE MEDIANS SHALL BE OUTLINED WITH 2 .

TYPICAL MEDIAN TRANSITIONS

GENERAL NOTES

1. WHEN MEDIANS ARE PRESENT, PAVEMENT MARKINGS ARE TO BE PLACED ADJACENT TO MEDIANS.
2. SOME OF THE INFORMATION INCLUDED WITH THIS DETAIL MAY NOT BE APPLICABLE TO THIS IMPROVEMENT.
3. PAVEMENT MARKINGS ARE TO BE EXTENDED THROUGH OMISSIONS WHEN APPLICABLE.
4. A STRIPING KEY IS AVAILABLE ELSEWHERE AND SHALL BE SHOWN WHERE THE QUANTITIES ARE LISTED.
5. FINAL PAVEMENT MARKINGS SHALL BE IN PLACE PRIOR TO PLACING ANY RAISED REFLECTIVE PAVEMENT MARKERS.
6. THE FOLLOWING CRITERIA SHALL BE USED FOR SELECTING THE DIAGONAL PAVEMENT MARKING SPACING,
   <30 MPH USE 15' (<50 km/h USE 4.5 m)
   30-45 MPH USE 20' (50-75 km/h USE 6.0 m)
   >45 MPH USE 30' (>75 km/h USE 9.0 m)

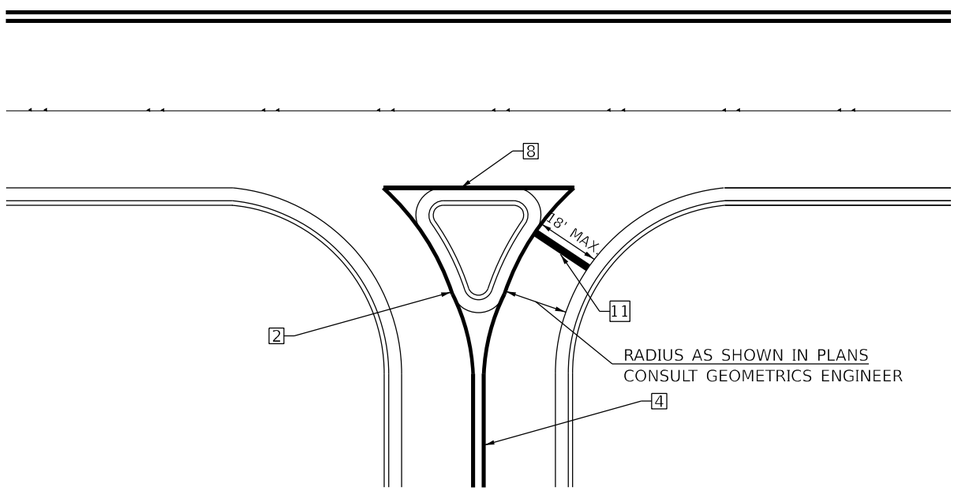

RIGHT IN – RIGHT OUT ACCESS

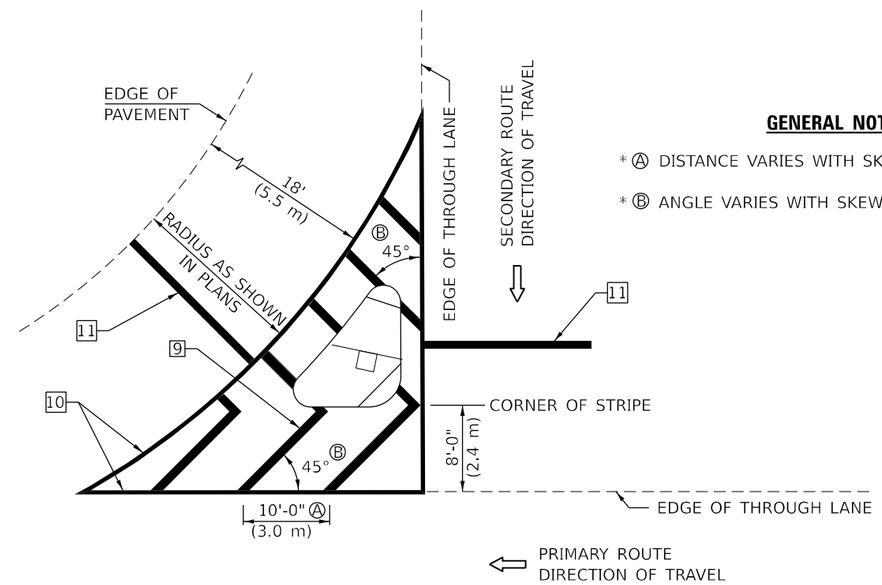

GENERAL NOTES

* Ⓐ DISTANCE VARIES WITH SKEW OF INTERSECTION.
* Ⓑ ANGLE VARIES WITH SKEW OF INTERSECTION.

ISLAND

* FOR RIGHT TURN LANE AND ISLAND STRIPING CONSULT GEOMETRICS ENGINEER.

Note: All dimensions are in INCHES (millimeters) unless otherwise shown.

DISTRICT 5 DETAIL NO. 7800AAAA

MODEL: Border
FILE NAME: S:\PROJECTS\2023\1371D23_IDOTD5\WO 1 Contract 70G11\DESIGN_70G11\CAD_Sheets\WHA\D570G11_Border.dgn

WILLETT HOFMANN & ASSOCIATES, INC.
PROFESSIONAL ENGINEERS · LAND SURVEYORS
809 EAST 200 STREET, CANTON, IL 61520-8657
T: 309 647-3187 · DESIGN FIRM #: 184-000918

USER NAME = afull	DESIGNED - AMF	REVISED -	
	DRAWN - TJA	REVISED -	
PLOT SCALE = 0.16666633 ' / in.	CHECKED - GFS	REVISED -	
PLOT DATE = 3/5/2024	DATE -	REVISED -	

STATE OF ILLINOIS
DEPARTMENT OF TRANSPORTATION

PAVEMENT MARKING AND MARKERS
(RURAL & URBAN APPLICATIONS)

SCALE: | SHEET 3 OF 4 SHEETS | STA. | TO STA.

F.A. RTE.	SECTION	COUNTY	TOTAL SHEETS	SHEET NO.
*	(55/56)RS-5,57-1(1)RS-1	MCLEAN	85	83
		CONTRACT NO. 70G11		
	ILLINOIS	FED. AID PROJECT		

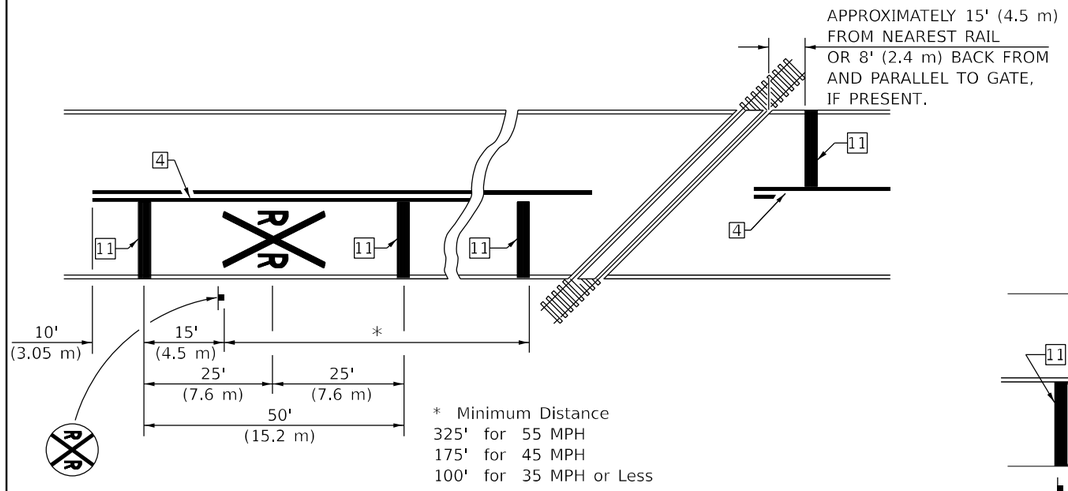

PAVEMENT MARKINGS AT
RAILROAD–HIGHWAY GRADE CROSSING

RAILROAD CROSSING WITH INTERCONNECT ONLY

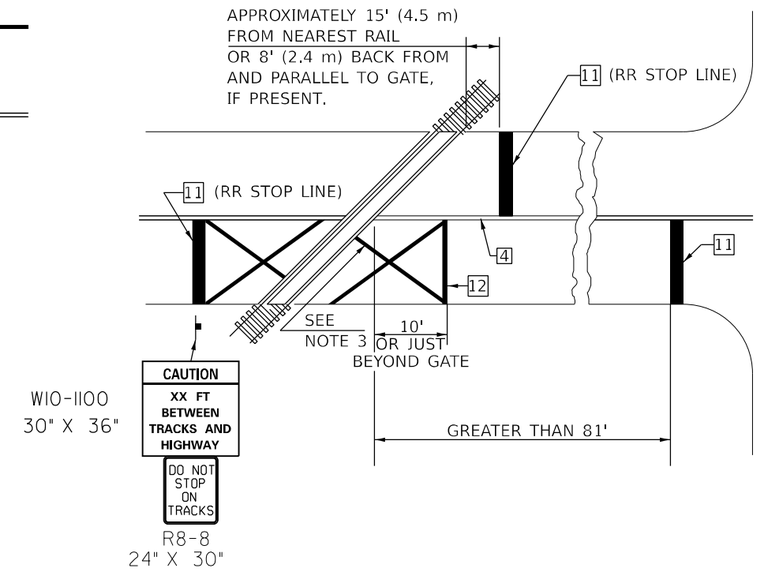

RAILROAD CROSSING WITH INTERCONNECT AND PRE–SIGNALS

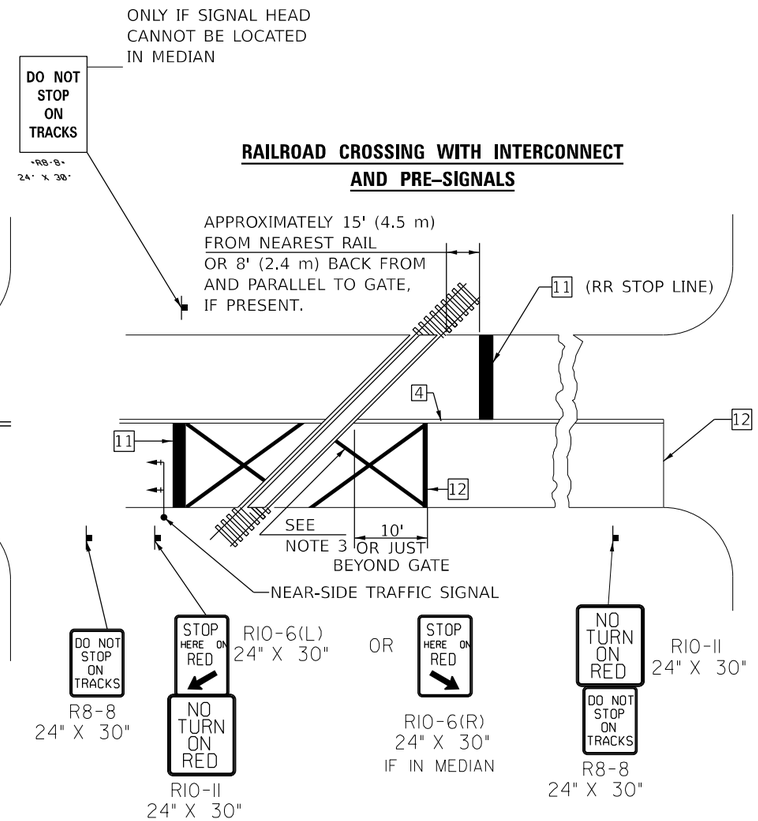

SUPPLEMENTAL PAVEMENT MARKING TREATMENT FOR
RAILROAD–HIGHWAY GRADE CROSSING

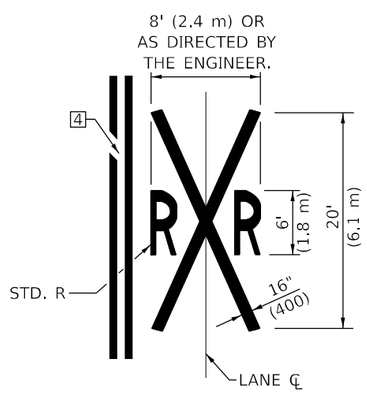

GENERAL NOTES

1. SUPPLEMENTAL PAVEMENT MARKINGS TO BE INSTALLED ONLY ON APPROACHES TO INTERSECTIONS CONTROLLED BY TRAFFIC SIGNALS WHICH ARE INTERCONNECTED WITH THE RAILROAD WARNING SIGNALS.

2. EXTEND PAVEMENT MARKINGS TO THE INTERSECTION ONLY WHERE NEAR-SIDE TRAFFIC SIGNALS ARE USED.

3. 6" WHITE PAVEMENT MARKINGS AT 45° TO PAVEMENT, 8' CENTER TO CENTER.

4. XX DISTANCE TO BE SHOWN ON SIGN MEASURED FROM A POINT 6 FEET FROM THE RAIL CLOSEST TO THE INTERSECTION OR FROM THE CLOSEST POINT ALONG THE EXIT GATE IF PRESENT OVER THE ROADWAY WHEN IN THE LOWERED POSITION TO THE STOP BAR OR CROSSWALK, WHICH EVER IS CLOSEST, ROUNDED DOWN TO NEAREST 5 FEET. WHERE THERE IS NO STOP LINE, MEASURE TO POINT WHERE DRIVER HAS A VIEW OF APPROACHING TRAFFIC.

5. THE CLEARANCE SIGN IS ALSO TO BE USED AS AN INTERIM MEASURE AT LOCATIONS WITH INTERCONNECTED INTERSECTION TRAFFIC SIGNALS WHERE IT IS PLANNED TO CHANGE THEM TO NEAR-SIDE SIGNALS AT A FUTURE TIME. IN THIS CASE, THE DISTANCE TO BE SHOWN ON THE SIGN IS MEASURED FROM THE EDGE OF THE STRIPED-OUT AREA INSTEAD OF 6 FEET FROM THE RAIL. THE SIGN IS TO BE REMOVED WHEN THE NEAR-SIDE SIGNALS ARE INSTALLED AND THE PAVEMENT MARKINGS EXTENDED TO THE INTERSECTION.

ALTERNATE SIGNS

NOTES

THE TRAVERSE SPREAD OF THE "X" MAY VARY ACCORDING TO LANE WIDTH.

ON MULTI-LANE ROADS, THE STOP LINES SHALL EXTEND ACROSS ALL APPROACH LANES AND SEPARATE RXR SYMBOLS SHALL BE PLACED ADJACENT TO EACH OTHER IN EACH LANE.

WHEN THE PAVEMENT MARKING SYMBOL IS USED, A PORTION OF THE SYMBOL SHOULD BE LOCATED DIRECTLY ADJACENT TO THE ADVANCE WARNING SIGN (W10-1) AS PLACED BY TABLE II-1, CONDITION B OF THE MUTCD.

Note: All dimensions are in INCHES (millimeters) unless otherwise shown.

DISTRICT 5 DETAIL NO. 7800AAAA

F.A. RTE.	SECTION	COUNTY	TOTAL SHEETS	SHEET NO.
*	(55/56)RS-5,57-1(1)RS-1	MCLEAN	85	84
		CONTRACT NO. 70G11		
		ILLINOIS FED. AID PROJECT		

WILLETT HOFMANN & ASSOCIATES INC
PROFESSIONAL DESIGN FIRM 184.001007
801 EAST 2ND STREET, DIXON, IL 61021-0587
T: 815 284 3381 DESIGNFIRM: 184.001007

USER NAME = afull	DESIGNED - AMF	REVISED -	
	DRAWN - TJA	REVISED -	
PLOT SCALE = 0.16666633 ' / in.	CHECKED - GFS	REVISED -	
PLOT DATE = 3/5/2024	DATE -	REVISED -	

STATE OF ILLINOIS
DEPARTMENT OF TRANSPORTATION

PAVEMENT MARKING AND MARKERS
(RURAL & URBAN APPLICATIONS)

SCALE: SHEET 4 OF 4 SHEETS STA. TO STA.

MODEL: Border
FILE NAME: S:\PROJECTS\2023\1371D23_IDOTDS\WO 1 Contract 70G11\DESIGN_70G11\CAD_Sheets\WHAIDS70G11_Border.dgn

XZ193300 – SURVEY MARKER, TYPE 1 (SPECIAL)

TO BE INSTALLED IN FLEXIBLE PAVEMENT OR SHOULDER, BITUMINOUS TREATED SURFACE AND TURF AREAS WITHIN THE RIGHT-OF-WAY FOR PRESERVING PERMANENT SURVEY MARKERS (PI'S, PT'S, PC'S, POC'S, & POT'S)

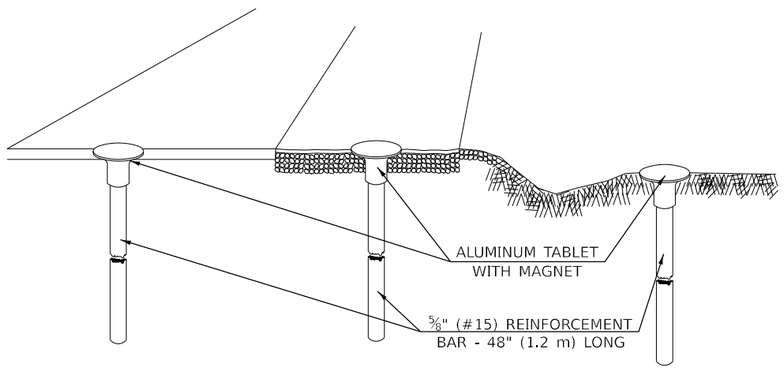

IN FLEXIBLE PAVEMENT OR SHOULDER | IN BITUMINOUS TREATED SURFACE | IN TURF AREAS WITHIN R.O.W.

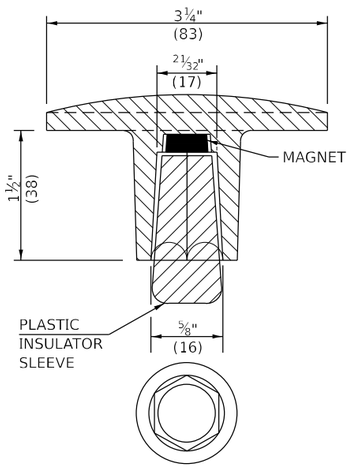

THE DIMENSIONS SHOWN SHALL BE EXACT, OTHERS MAY VARY, BUT SHALL BE SHOWN ON SHOP DRAWINGS.

GENERAL NOTES

1. THE CONTRACT UNIT PRICE, EACH, FOR SURVEY MARKER, TYPE 1 (SPECIAL) SHALL BE PAYMENT IN FULL FOR FURNISHING THE REINFORCEMENT BAR AND ALUMINUM TABLET AND FOR ALL LABOR AND MATERIAL REQUIRED TO SET THE MARKER IN PLACE.
2. ALL SURVEY MARKERS, TYPE 1 (SPECIAL) SHALL BE PLACED ±1/4" (6 mm) BELOW THE FINAL SURFACE.
3. WHEN THE TABLET AND REBAR ARE PLACED AS PART OF A SURVEY MARKER VAULT, THEY SHALL BE CONSIDERED AS INCLUDED IN THAT PAY ITEM AND THERE WILL BE NO PAYMENT FOR THE SURVEY MARKER, TYPE 1 (SPECIAL).

SPECIFICATIONS FOR ALUMINUM TABLET

SURVEY CAP FOR REBAR. 3¼" (83 mm) CONVEX SURVEY CAP FOR ⅝" (15 mm) REBAR WITH ILLINOIS DEPARTMENT OF TRANSPORTATION LOGO. THIS LOGO SHALL PROVIDE LETTERS RECESSED INTO THE SURFACE A MINIMUM OF 1/32" (0.8 mm) FOR EASY AND LONG-TERM LEGIBILITY. THE ALUMINUM CAP FOR REBAR SHALL BE PRODUCED BY THE PROCESS OF ORBITAL FORGING TO PRODUCE A HIGH-STRENGTH AND DURABLE MARKER CAP WHICH WILL NOT CHIP OR BREAK AND PROVIDE A SMOOTH FINISH FOR STAMPING OF DATA IN THE FIELD. THE ALUMINUM CAP FOR REBAR SHALL BE TAPERED FOR A PERFECT COMPRESSION FIT. A SPECIAL PLASTIC INSULATOR SHALL BE INSTALLED TO PREVENT DISSIMILAR METAL CONTACT AND CORROSION. THE PLASTIC INSULATOR SHALL FORM READILY TO THE OUTER SHAPE OF THE REBAR AND TO THE INNER SHAPE OF THE ALUMINUM CAP SOCKET. THE PLASTIC INSULATOR SHALL BE LOW DENSITY POLYETHYLENE, A MINIMUM 1½" (38 mm) LONG AND CONFORM TO FEDERAL SPECIFICATION L-P 390.

COMPOSITION: ALUMINUM 98.3-98.7%; OTHER 1.3-1.7%; STRENGTH: YIELD 28 KSI (193 MPa), ULTIMATE 32 KSI (221 MPa). ELONGATION 15% [IN 2" (50 mm)]. SPECIFICATIONS: ALUMINUM ALLOY 6101-0; ASTM B317-83 (EXCEPT TEMPER) AS FORGED. NO EXCEPTIONS.

SPECIFICATIONS FOR REBAR

REBAR FOR ALUMINUM TABLET. REINFORCEMENT BAR SHALL BE ⅝" (#15) X 48" (1.2 m) (DEFORMED).

INSPECTION OF REINFORCEMENT BAR ⅝" (#15) SHALL BE DONE BY DISTRICT PERSONNEL OF THE ILLINOIS DEPARTMENT OF TRANSPORTATION, DIVISION OF HIGHWAYS.

XZ193400 – SURVEY MARKER, TYPE 2 (SPECIAL)

TO BE INSTALLED IN RIGID OR COMPOSITE PAVEMENT FOR PRESERVING PERMANENT SURVEY MARKERS (PI'S, PT'S, PC'S, POC'S, & POT'S)

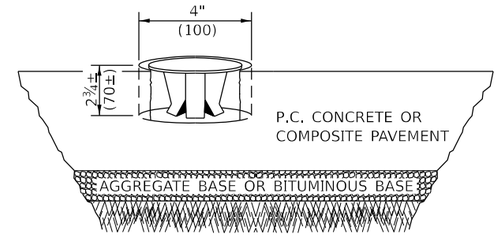

SPECIFICATIONS FOR ALUMINUM TABLET (FORKED)

ALUMINUM TABLET (FORKED) FOR USE WITH "SURVEY MARKER, TYPE 2, (SPECIAL)" SHALL BE AS SHOWN ON THE DETAIL FOR THE 3¼" (83 mm) CONVEX SURVEY TABLET WITH ILLINOIS DEPARTMENT OF TRANSPORTATION LOGO. THIS LOGO SHALL PROVIDE FOR LETTERS RECESSED INTO THE SURFACE A MINIMUM OF 1/32" (0.8 mm) FOR EASY AND LONG-TERM LEGIBILITY. THE ALUMINUM TABLET SHALL BE PRODUCED BY THE PROCESS OF ORBITAL FORGING TO PRODUCE A HIGH-STRENGTH AND DURABLE MARKER CAP WHICH WILL NOT CHIP OR BREAK AND PROVIDE A SMOOTH FINISH FOR STAMPING OF DATA IN THE FIELD. THE ALUMINUM TABLET SHALL BE DESIGNED NOT TO TURN OR ROTATE. THREE PRONGS ON A 2½" (63 mm) STEM SHALL BE SUCH THAT THE ALUMINUM TABLET CANNOT BE EASILY REMOVED.

COMPOSITION: ALUMINUM 92-93%; MAGNESIUM 6.5-7.5%. STRENGTH: YIELD 19,000-21,000 PSI (131-145 MPa); TENSILE 38,000-44,000 PSI (262-303 MPa); ELONGATION 10-15% [IN 2" (50 mm)]. SPECIFICATIONS: ALLOY 535.0; QQ-A-601ES. NO EXCEPTIONS.

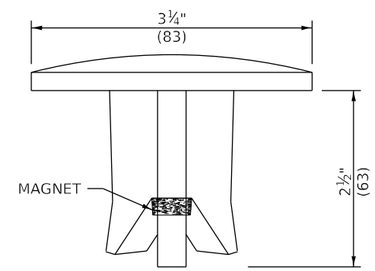

SIDE VIEW

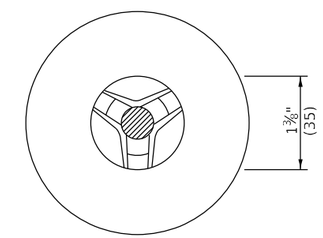

BOTTOM VIEW

THE DIMENSIONS SHOWN SHALL BE EXACT, OTHERS MAY VARY, BUT SHALL BE SHOWN ON SHOP DRAWINGS.

GENERAL NOTES

1. WORK ON THIS ITEM SHALL NOT START UNTIL THE FINAL SURFACE IS COMPLETED.
2. THE ALUMINUM TABLET (FORKED) SHALL REST UPON THE BOTTOM OF THE 4" (100 mm) CORE HOLE. IF THE HOLE IS TOO DEEP, EPOXY GROUT MUST BE USED TO DECREASE THE DEPTH AND ALLOWED TO HARDEN BEFORE PROCEEDING.
3. THE ALUMINUM TABLET SHALL BE ANCHORED IN THE 4" (100 mm) DIAMETER HOLE IN THE NEW PAVEMENT WITH TWO-COMPONENT EPOXY CONFORMING TO APPLICABLE PORTIONS OF ARTICLE 1025.01 OF THE STANDARD SPECIFICATIONS.
4. THE 4" (100 mm) CORE HOLE SHALL BE SUBJECT TO THE APPROVAL OF THE ENGINEER.
5. THE CONTRACT PRICE, EACH, FOR SURVEY MARKER, TYPE 2 (SPECIAL) SHALL BE PAYMENT IN FULL FOR FURNISHING THE ALUMINUM TABLET AND FOR ALL LABOR AND MATERIAL REQUIRED TO SET THE MARKER IN PLACE, AS SPECIFIED, INCLUDING CORING THE NEW PAVEMENT.
6. ALL SURVEY MARKERS, TYPE 2 (SPECIAL) SHALL BE PLACED ± 1/4" (6 mm) BELOW THE FINAL SURFACE.

Note: All dimensions are in INCHES (millimeters) unless otherwise shown.

DISTRICT 5 DETAIL NO. XZ193AAA